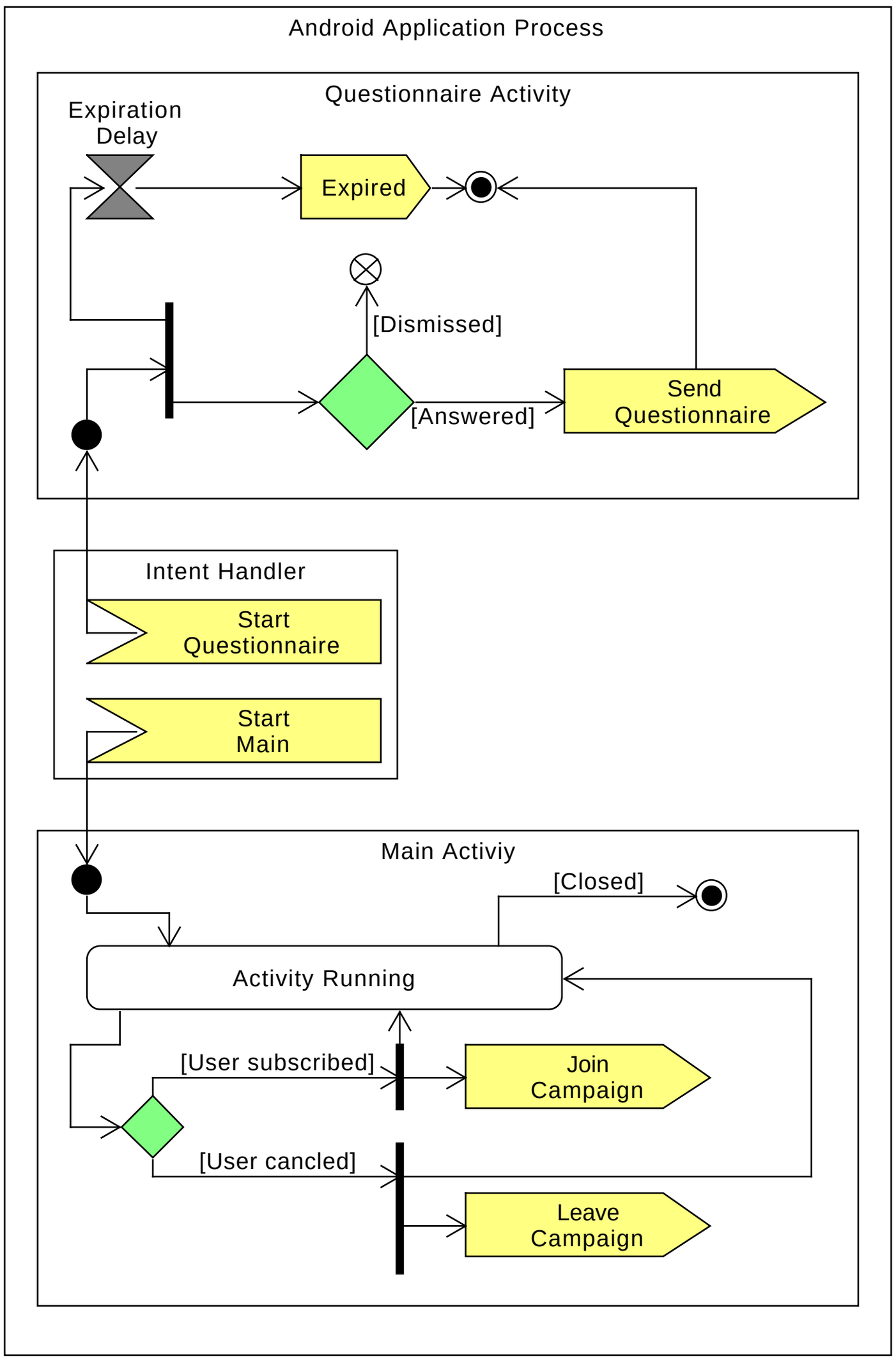
Android Application Process
Questionnaire Activity
Expiration Delay
Expired
[Dismissed]
[Answered]
Send Questionnaire
Intent Handler
Start Questionnaire
Start Main
Main Activiy
[Closed]
Activity Running
[User subscribed]
Join Campaign
[User cancled]
Leave Campaign

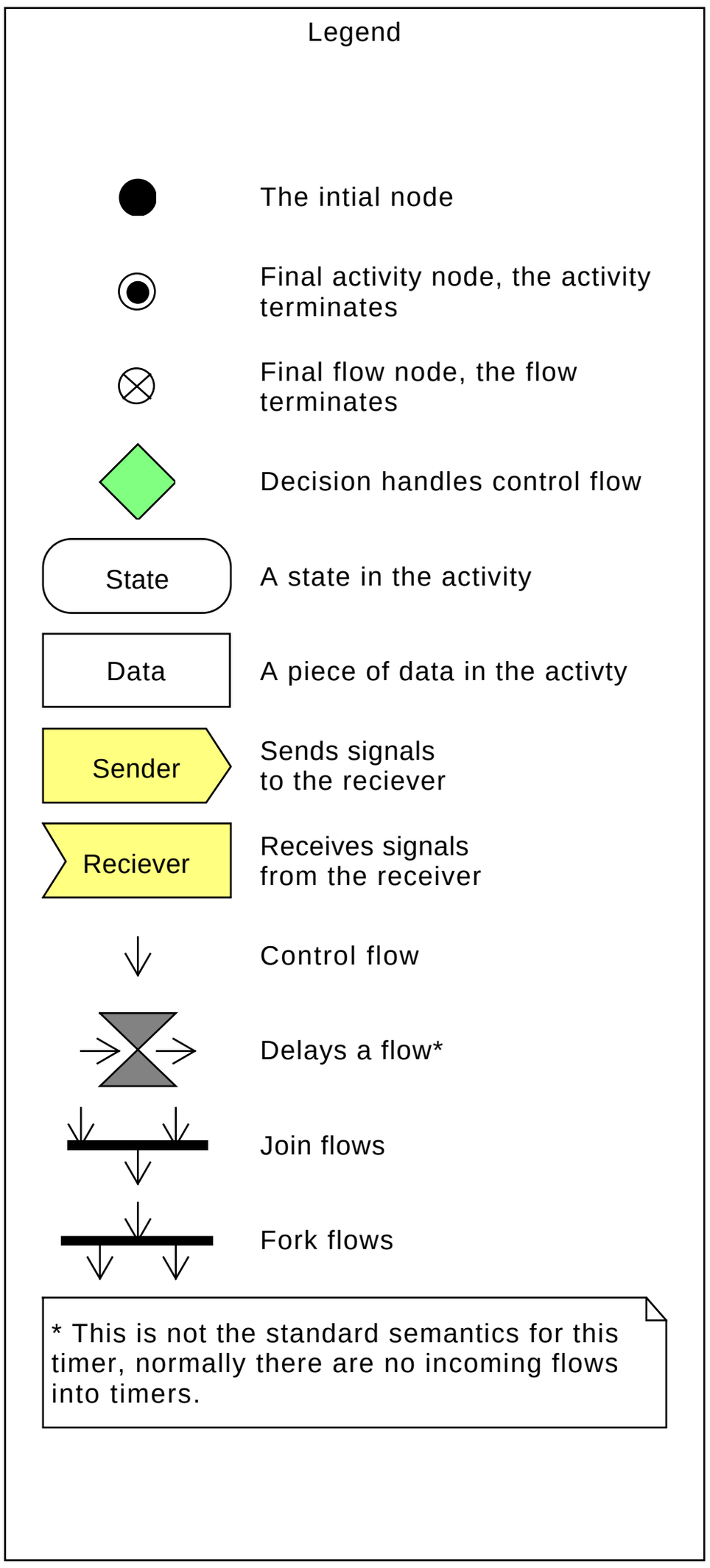
Legend
The intial node
Final activity node, the activity terminates
Final flow node, the flow terminates
Decision handles control flow
State
A state in the activity
Data
A piece of data in the activty
Sender
Sends signals to the reciever
Reciever
Receives signals from the receiver
Control flow
Delays a flow*
Join flows
Fork flows
* This is not the standard semantics for this timer, normally there are no incoming flows into timers.

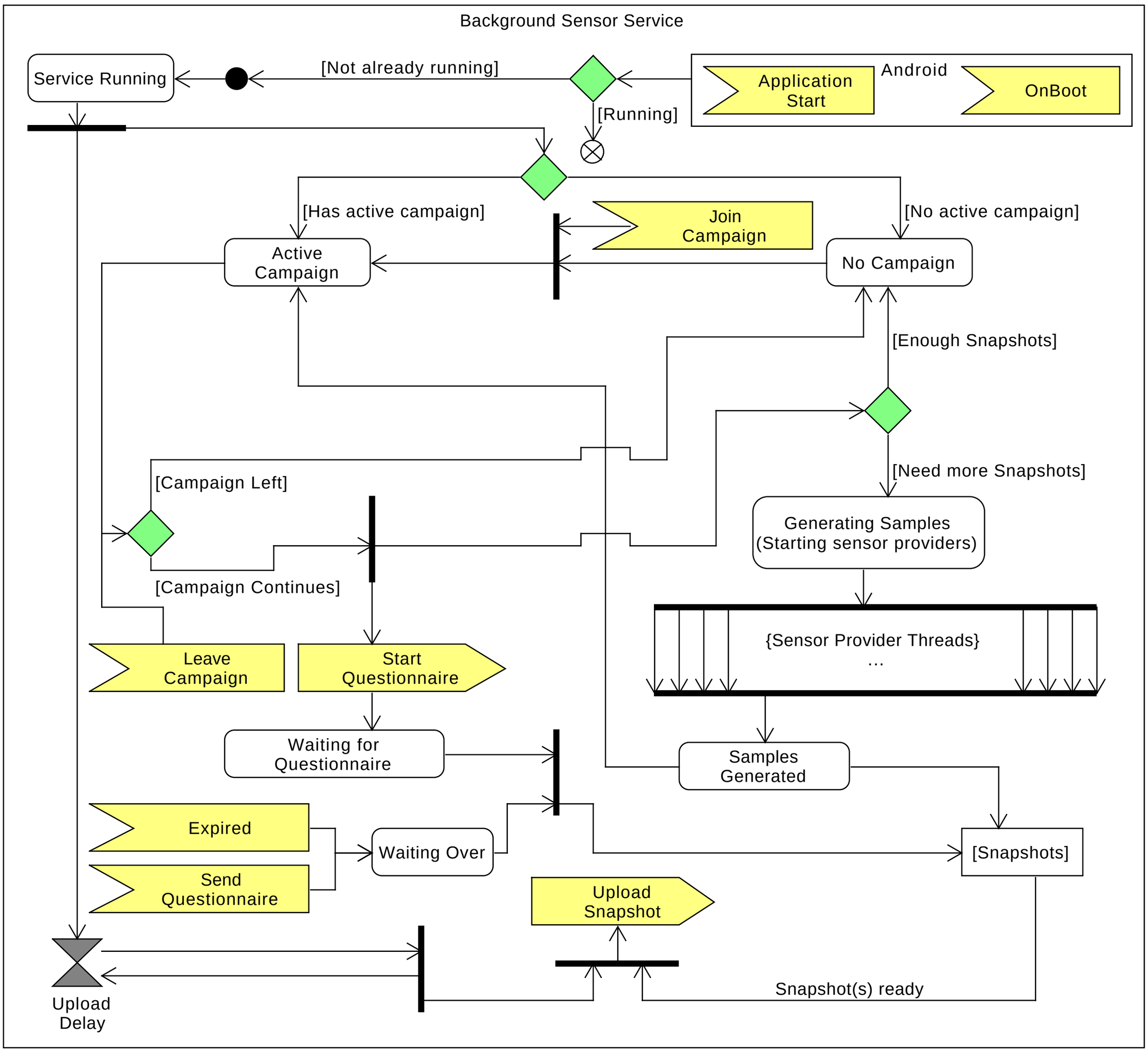
Background Sensor Service
Service Running
[Not already running]
[Running]
Application Start
Android
OnBoot
[Has active campaign]
Join Campaign
[No active campaign]
Active Campaign
No Campaign
[Enough Snapshots]
[Need more Snapshots]
[Campaign Left]
[Campaign Continues]
Generating Samples (Starting sensor providers)
{Sensor Provider Threads}
...
Leave Campaign
Start Questionnaire
Waiting for Questionnaire
Samples Generated
Expired
Send Questionnaire
Waiting Over
[Snapshots]
Upload Snapshot
Upload Delay
Snapshot(s) ready