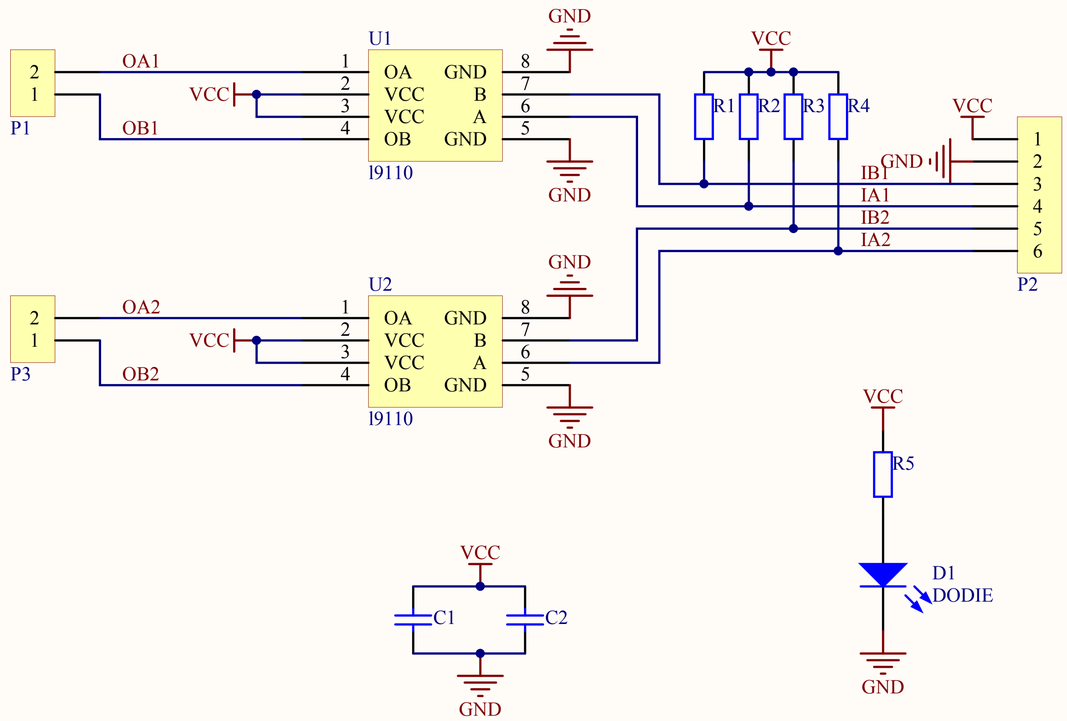

Title		
Size A4	Number	Revision
Date: 2012-11-30		Sheet of
File: E:\ \..\ .SchDoc		Drawn By: