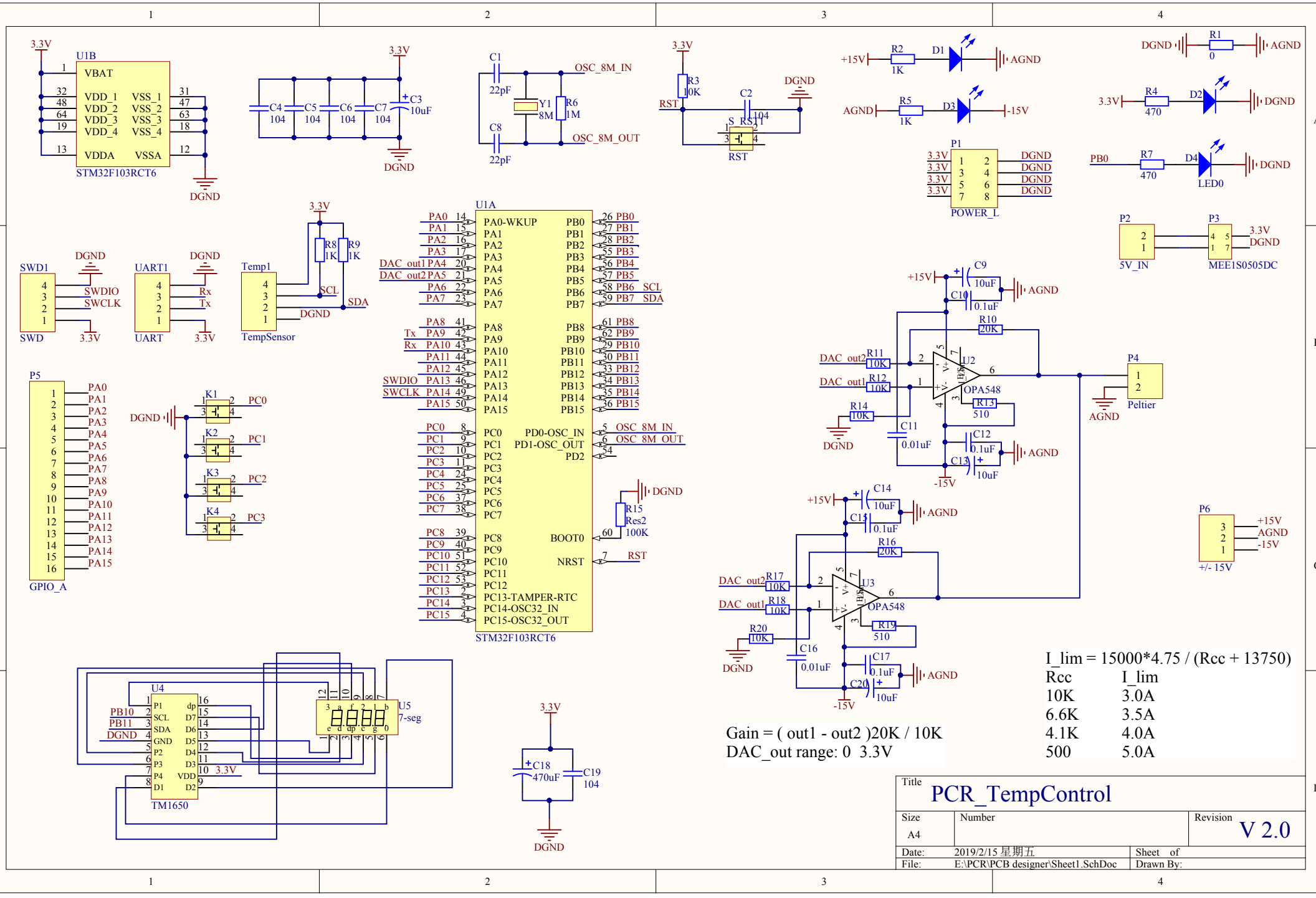
U1B
STM32F103RCT6
VBAT
VDD_1 VDD_2 VDD_3 VDD_4
VSS_1 VSS_2 VSS_3 VSS_4
VDDA VSSA
3.3V
DGND
C4 104
C5 104
C6 104
C7 104
C3 10uF
C1 22pF
C8 22pF
Y1 8M
R6 1M
OSC_8M_IN
OSC_8M_OUT
R3 10K
RST
C2 104
S_RST1
R2 1K
D1
AGND
+15V
R5 1K
D3
-15V
R1 0
R4 470
D2
P1
POWER_L
R7 470
D4
LED0
PB0
P2
5V_IN
P3
MEE1S0505DC
SWD1
SWDIO
SWCLK
SWD
UART1
Rx
Tx
UART
Temp1
R8 1K
R9 1K
SCL
SDA
TempSensor
U1A
STM32F103RCT6
PA0-WKUP
PD0-OSC_IN
PD1-OSC_OUT
BOOT0
NRST
PC13-TAMPER-RTC
PC14-OSC32_IN
PC15-OSC32_OUT
R15 Res2 100K
P5
GPIO_A
K1
K2
K3
K4
C9 10uF
C10 0.1uF
R10 20K
DAC_out2
DAC_out1
R11 10K
R12 10K
R14 10K
U2
OPA548
R13 510
C11 0.01uF
C12 0.1uF
C13 10uF
P4
Peltier
C14 10uF
C15 0.1uF
R16 20K
R17 10K
R18 10K
U3
R19 510
R20 10K
C16 0.01uF
C17 0.1uF
C20 10uF
P6
+/- 15V
U4
TM1650
U5
7-seg
C18 470uF
C19 104
Gain = (out1 - out2)20K / 10K
DAC_out range: 0 3.3V
I_lim = 15000*4.75 / (Rcc + 13750)
Rcc I_lim
10K 3.0A
6.6K 3.5A
4.1K 4.0A
500 5.0A
Title
PCR_TempControl
Size
A4
Number
Revision
V 2.0
Date: 2019/2/15 星期五
Sheet of
File: E:\PCR\PCB designer\Sheet1.SchDoc
Drawn By: