Introduction to Power Stations

Contents

- Power system layout
- Introduction to power plants
- Introduction to
  - Hydro power plants
  - Thermal power plants
  - Nuclear power plants
  - Diesel power plants
  - Gas turbine
  - Solar power stations
  - Wind power stations
  - Biomass energy
  - Geothermal energy

Power System Layout

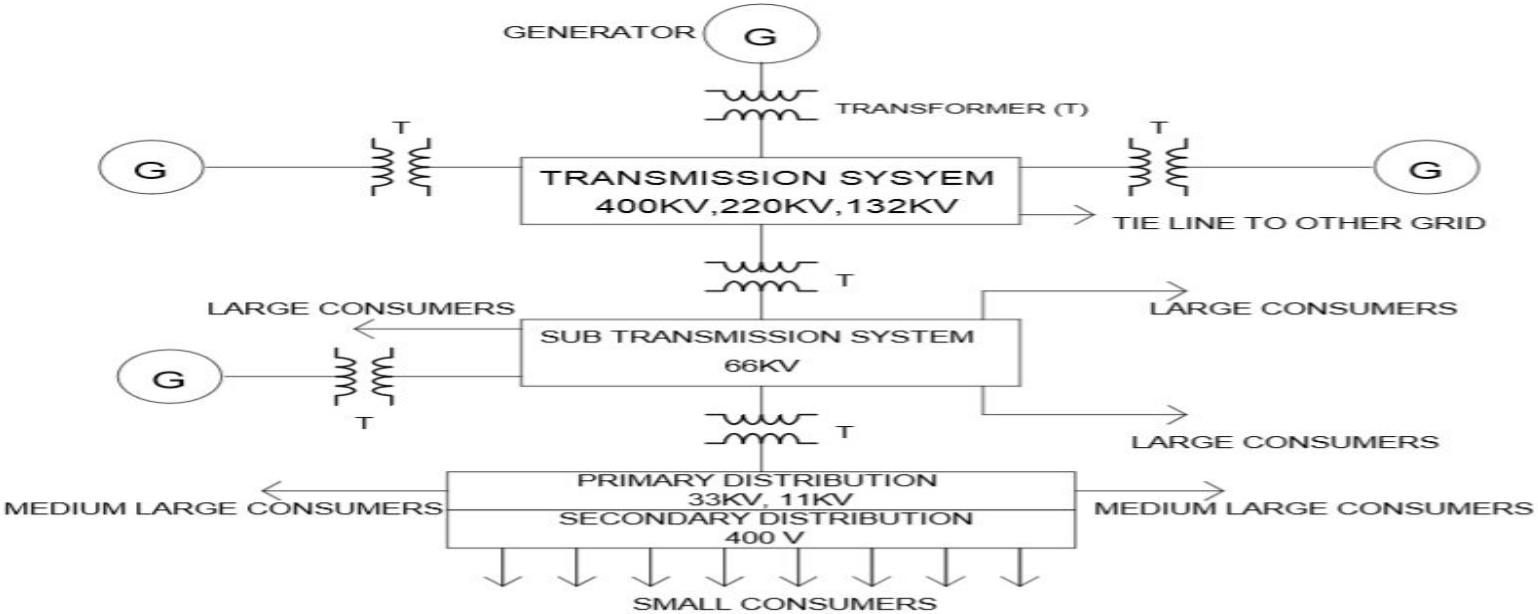

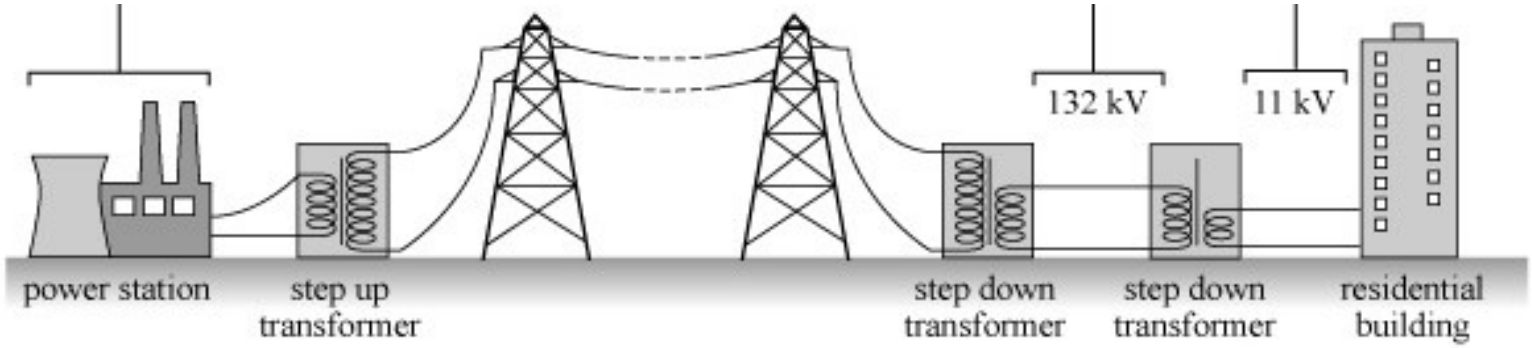

Introduction to Power Plants

- Total installed capacity: 505 GW as of 31st October2025
- Gross electricity generated: 2030 Twh (2024)

Fuel	MW	% of Total
Total Thermal	2,44,808	48.8%
Coal	2,09,525	41.8%
Lignite	6,360	1.3%
Gas	24,957	5.0%
Diesel	466	0.1%
Hydro (Renewable)	46,899	9.4%
Nuclear	6,780	1.4%
RES*	204400	40.7%
Total	**372,693**	

* RES (Renewable Energy Sources) include Small Hydro Project, Biomass Gasifier, Biomass Power, Urban & Industrial Waste Power, Solar and Wind Energy.

Introduction to Power Plants

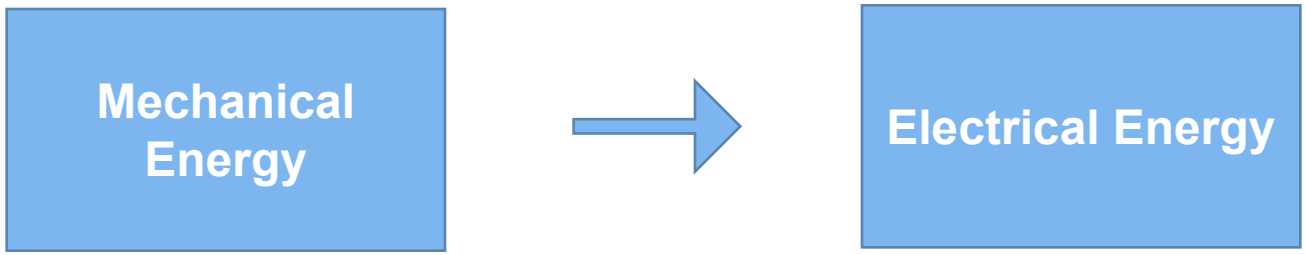

- The necessary things:
  - A rotating machine
  - Fuel

- **CONVENTIONAL POWER PLANTS:**

Thermal power plant- Generates electric power by burning fossil fuels like coal, natural gas or diesel.

Hydroelectric Power Plant- Electricity is produced by building dams on suitable rivers.

Nuclear Power Plant- Controlled nuclear reaction is maintained to generate electricity.

- **NON CONVENTIONAL POWER PLANT:**

Solar Cell (PV Cell)- Generates power by collecting solar radiation.

Wind Turbine -The kinetic energy of wind is used to create power.

Biomass power plants- Natural organic matter is burnt to produce electricity.

Geothermal power plants- Uses the natural heat found in the deep levels of the earth to generate electricity.

Which one is renewable and which one is non-renewable?

Thermal power plants

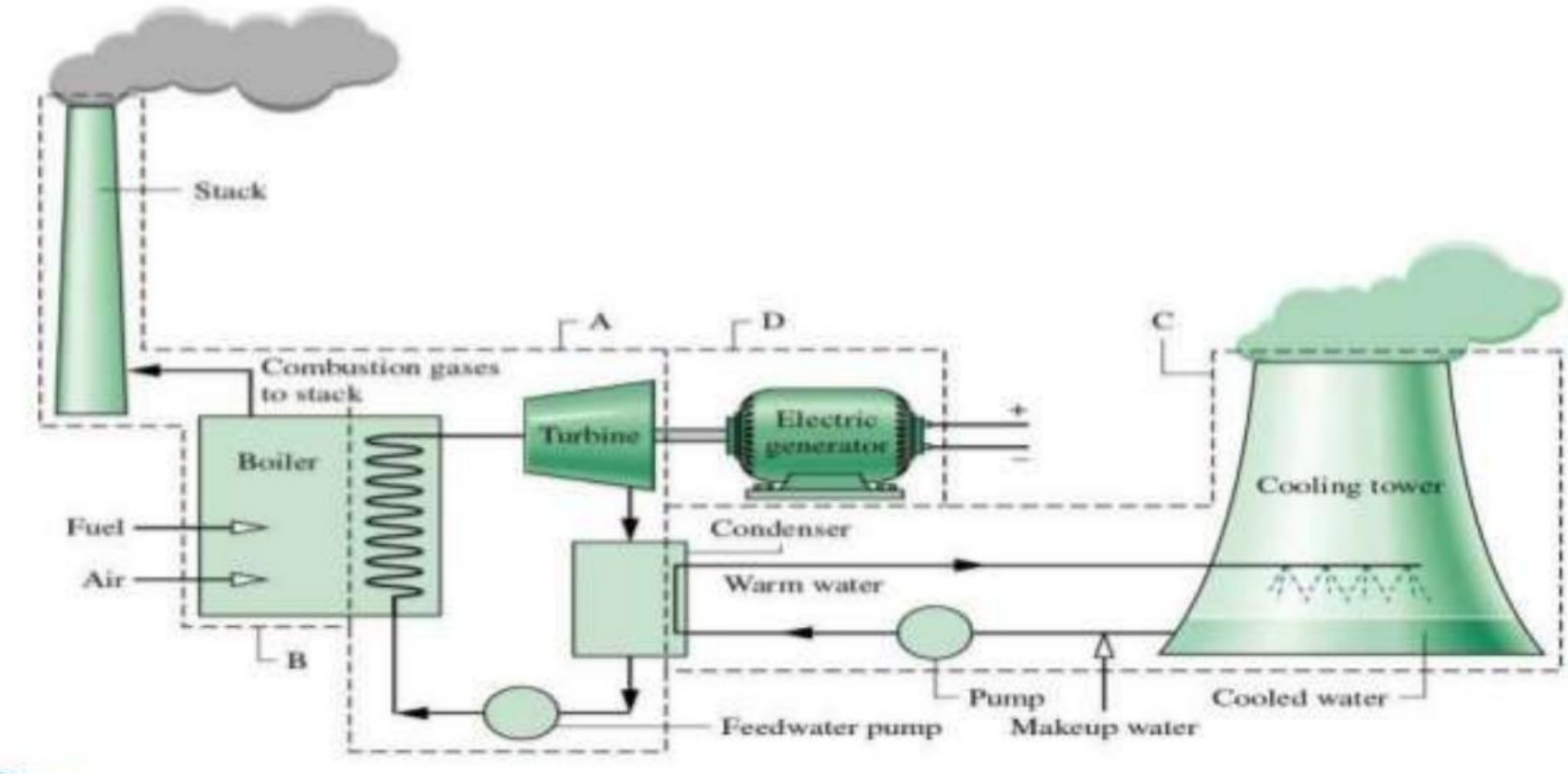

Thermal power plants

- Main parts:
  - Coal handling plant
  - Boiler
  - Economizer, Air preheater
  - Steam turbine and Condenser
  - Cooling tower and ponds, Feed water heater,
  - Ash handling plant, E.S.P,
  - Power supply to auxiliaries

Hydro power plants

R.K. Mohanta et al. / Engineering Science and Technology, an International Journal 20 (2017) 637–648

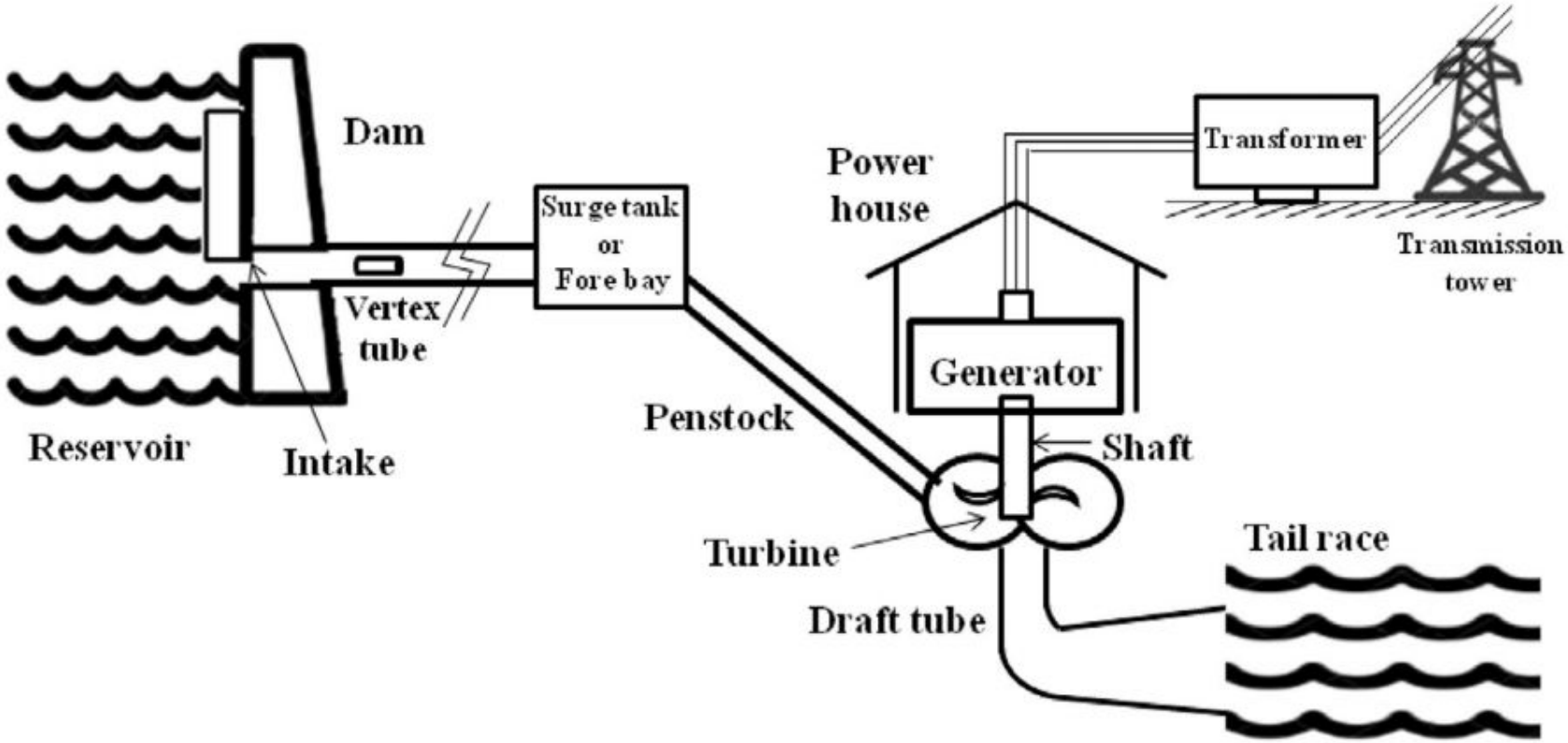

Fig. 2. Components of HPS.

Drawn by
Srikanth
Allamsetty

Hydro power plants

- Classification according to (i) Water Flow (ii) Load (iii) Head surge tank,
- Penstock, spillway, Tail Race,
- Types of turbine (i) Pelton turbine, (ii) Francis turbine, (iii) Kaplan turbine,
- Governor, specific speed, Plant auxiliaries.

Nuclear power plants

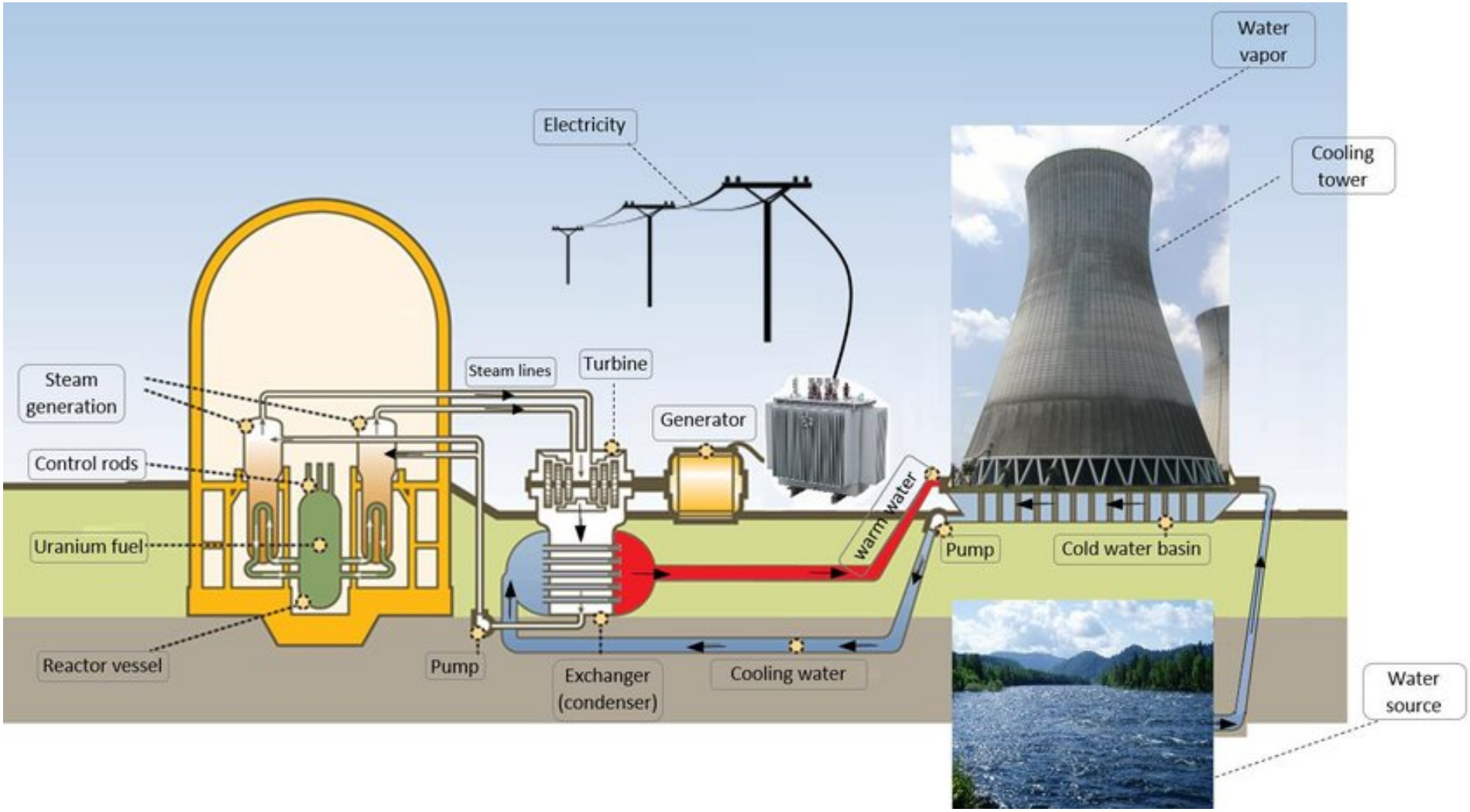

Nuclear power plants

- Nuclear reactor and heat exhanger replace boiler of thermal power plant
- Qualified professional personnel needed to work with the fuel.
- Very less amount of fuel can generate more amount of power.
- Capital cost is so high.

Nuclear power plants

- Location, Layout of nuclear power plant,
- Fission, Fusion, controlled chain reaction,
- Classification of Nuclear reactors
  –Advanced Gas cooled Reactor, Pressurized Water Reactor, Boiling Water Reactor, Fast Breeder Reactor, and
- Reactor Control and Cooling.

Diesel Power Plant

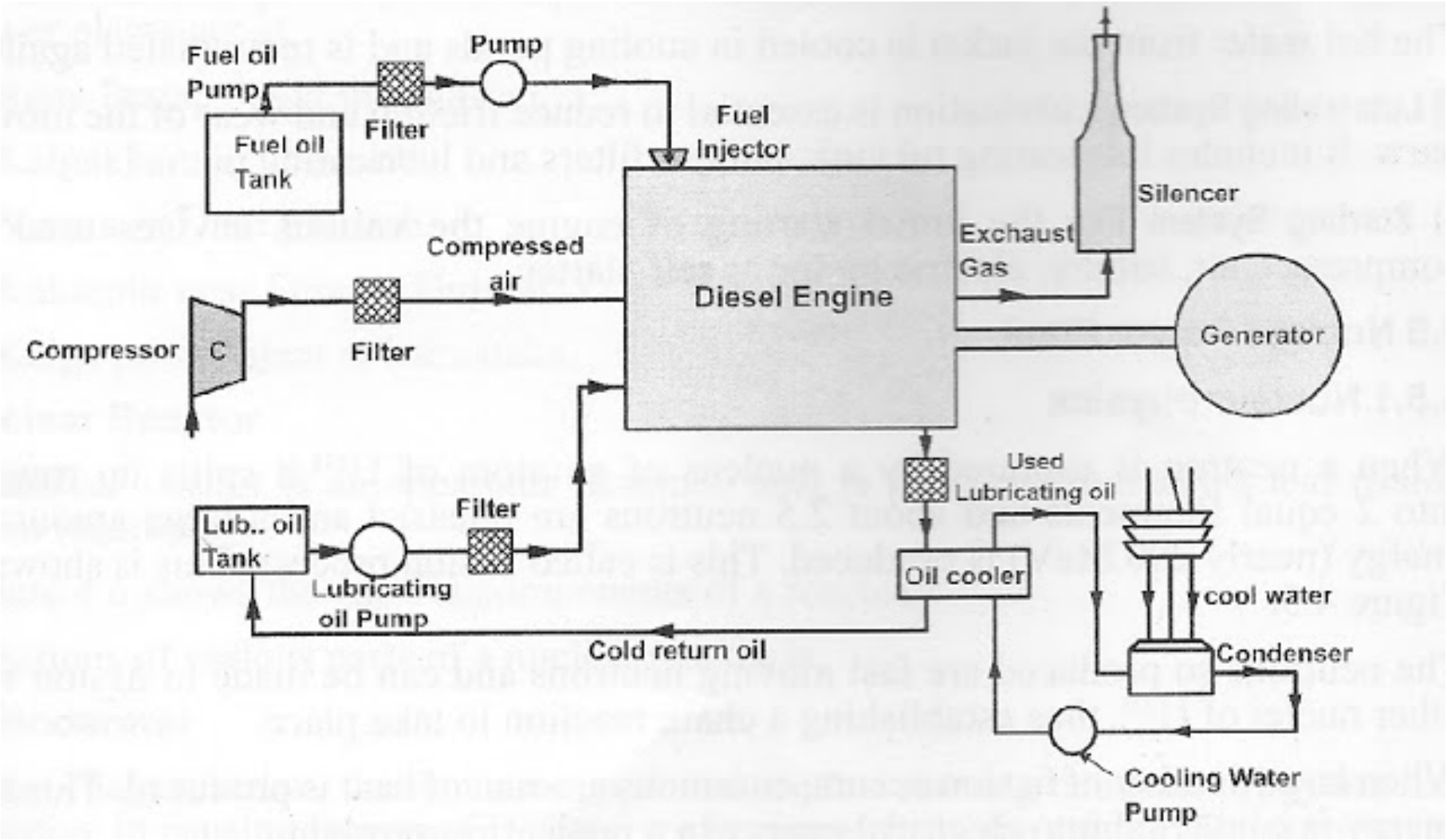

Diesel Power Plant

- A diesel power plant is a standby power station.
- It’s generally a compact station so it can be located where we actually require it.
- Emergency supply station.

Gas turbine

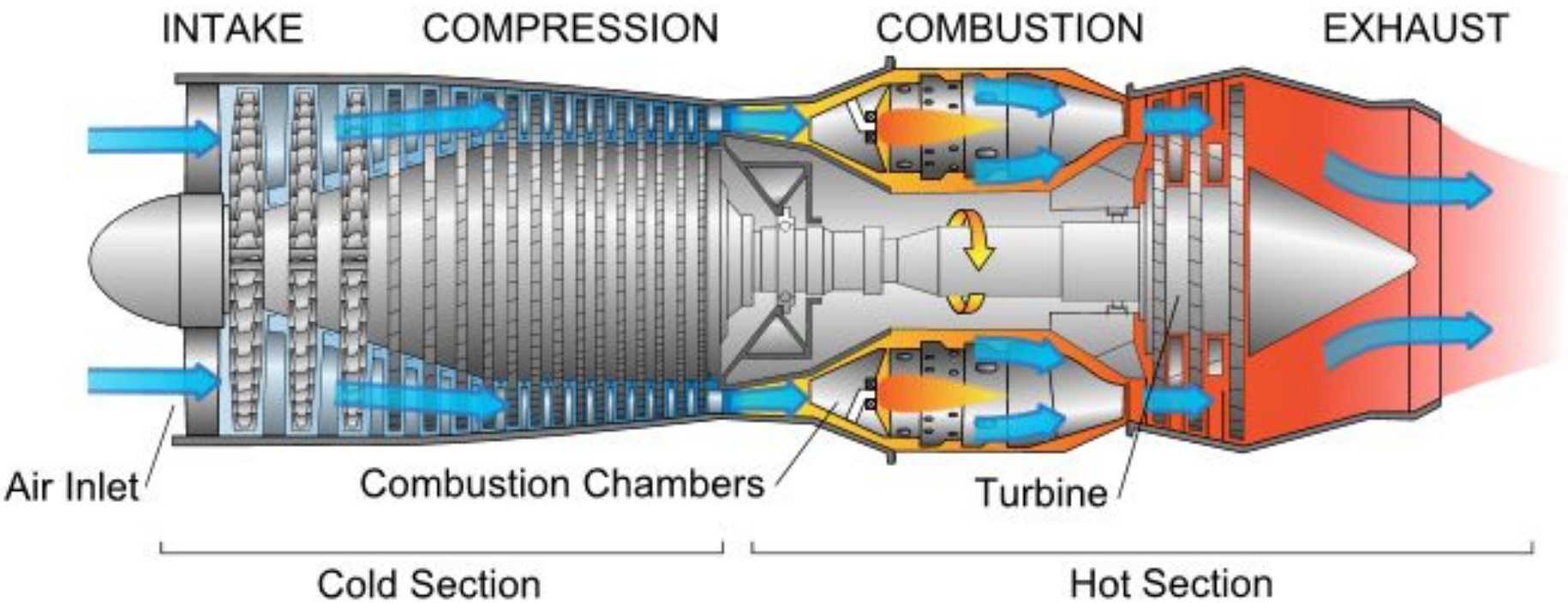
INTAKE
COMPRESSION
COMBUSTION
EXHAUST
Air Inlet
Combustion Chambers
Turbine
Cold Section
Hot Section

Solar power plants

- Solar power plants use one of two technologies:
  - Photovoltaic (PV) systems use solar panels, either on rooftops or in ground-mounted solar farms, converting sunlight directly into electric power.
  - Concentrated solar power (CSP, also known as "concentrated solar thermal") plants use solar thermal energy to make steam, that is thereafter converted into electricity by a turbine.

Solar PV Stations

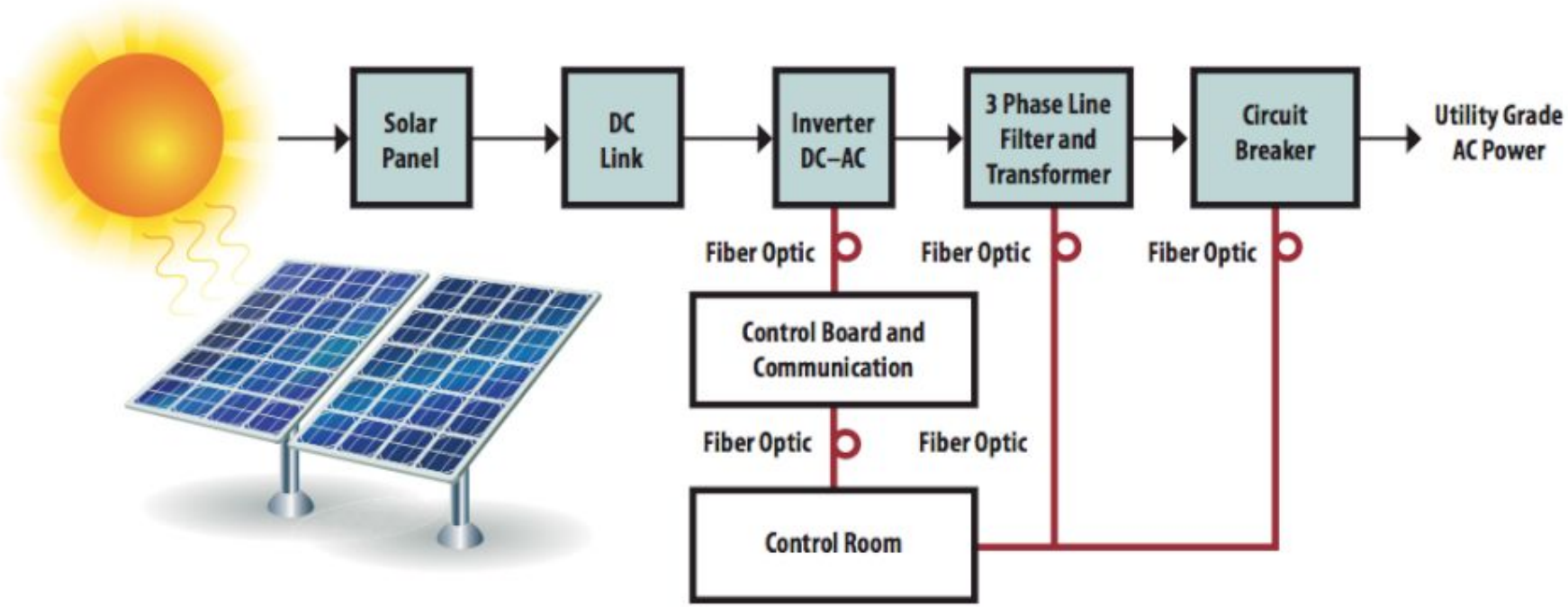

Solar power stations

- Theory of solar cells. Solar cell materials, solar cell power plant, limitations.
- Solar radiation flat plate collectors and their materials, applications and performance,
- Solar thermal power plants, photovoltaic – solar cells and its applications.

Wind power stations

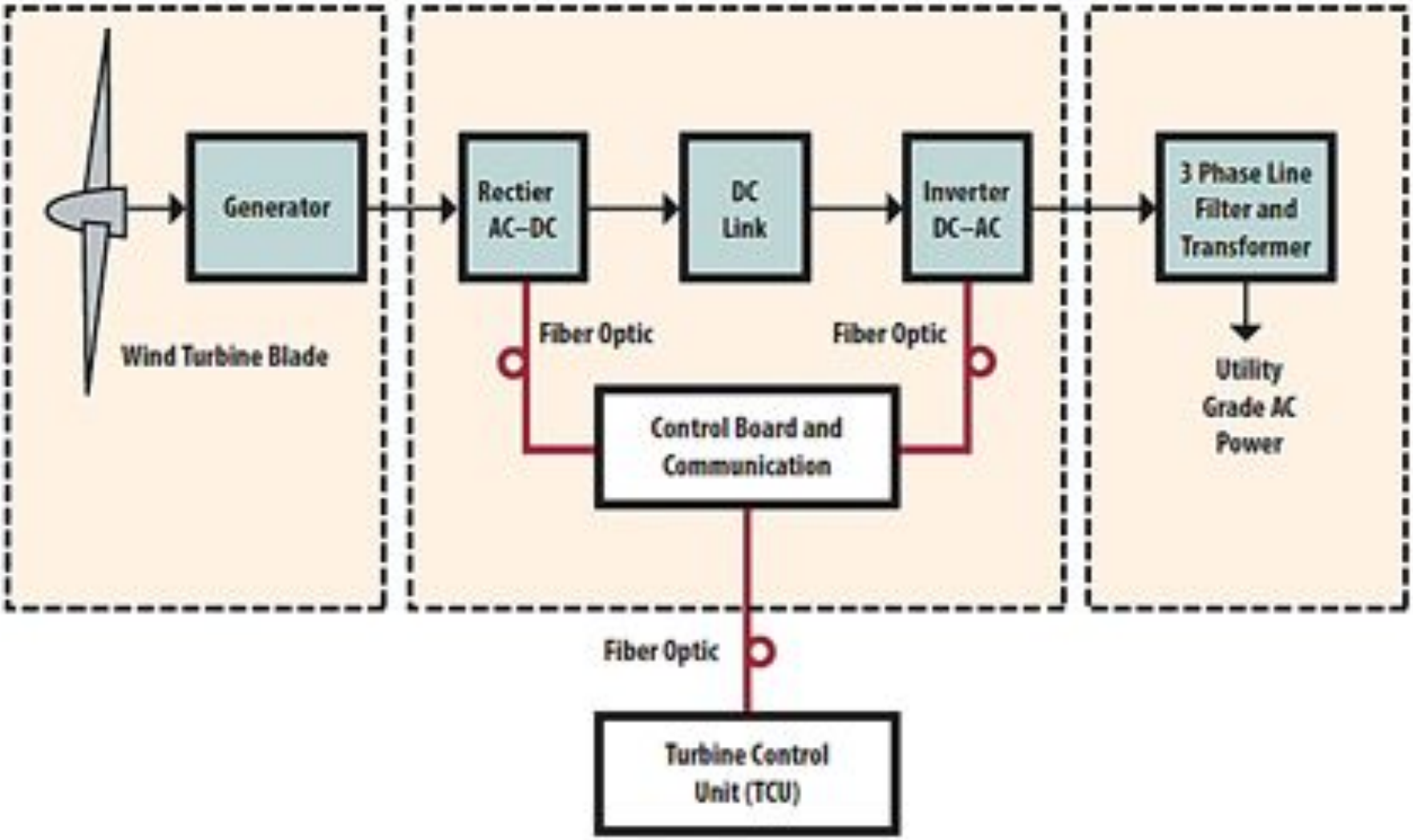

Wind power stations

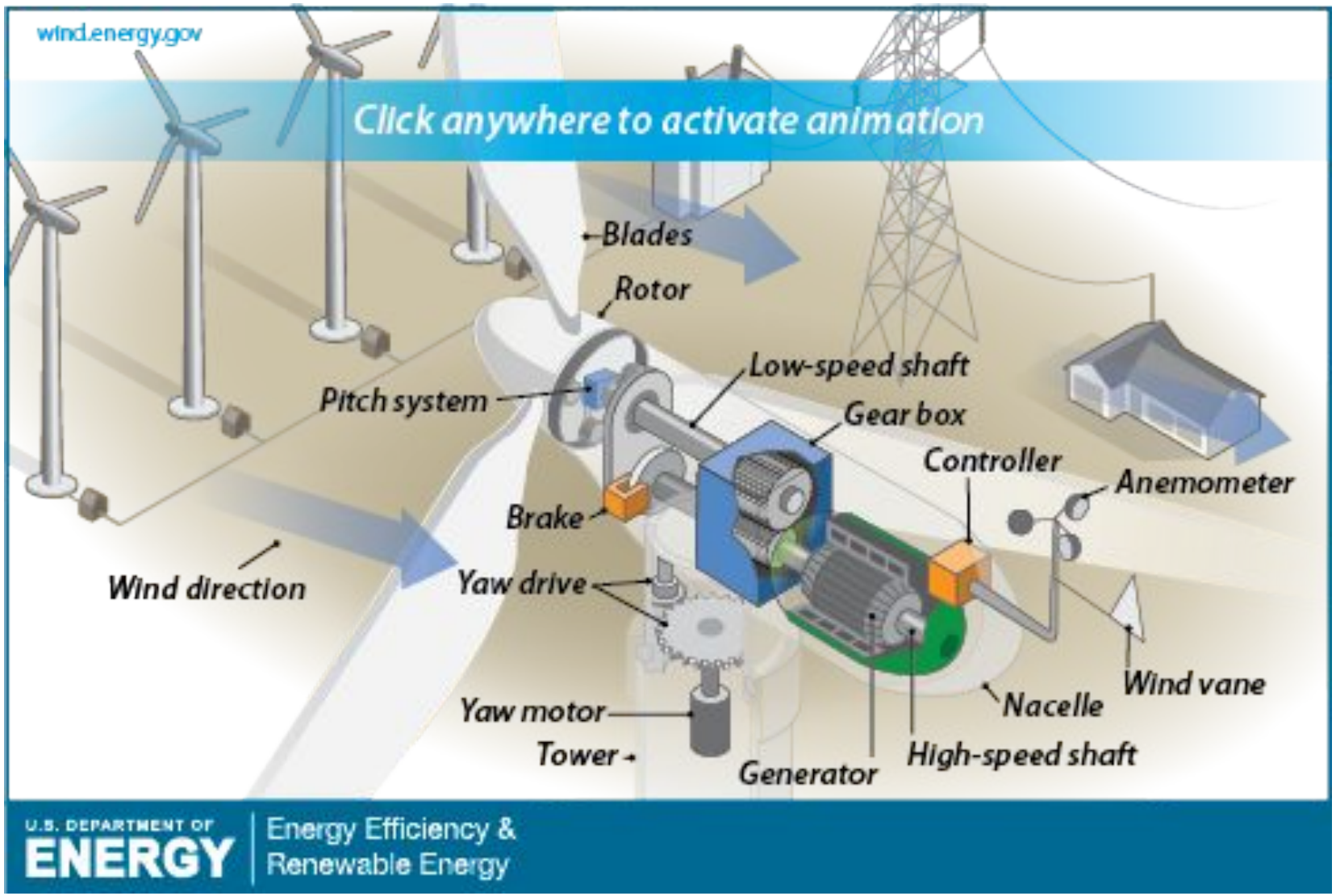

Wind power stations

- Origin of Winds, Nature of Winds, Wind Turbine Setting, Major Application of Wind Power, Basics of Fluid Mechanics, Wind Turbine Aerodynamics,
- Wind Turbine Types and Their Construction,
- Wind Energy Conversion Systems (WECS).

Biomass Energy

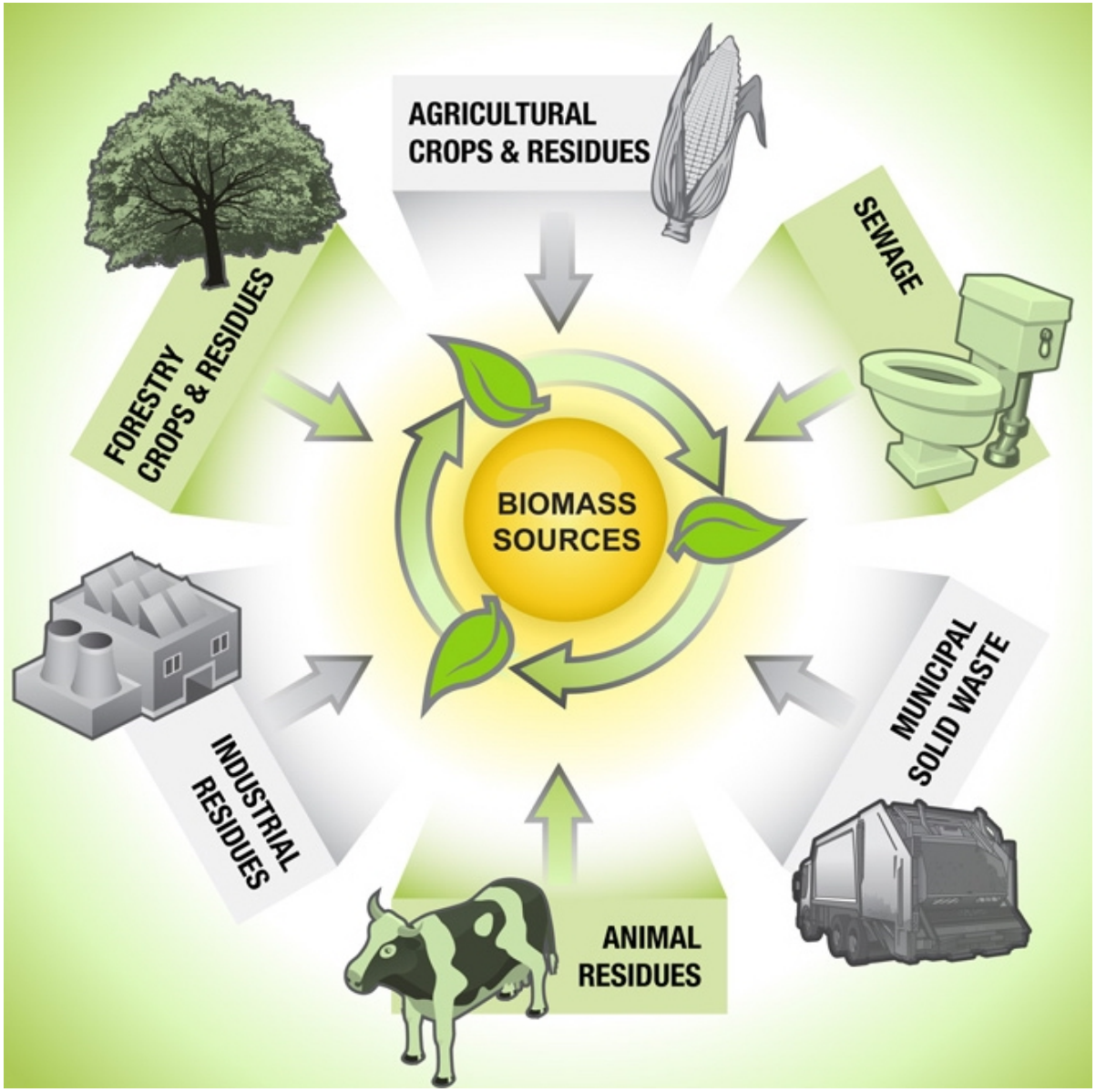

Biomass Energy

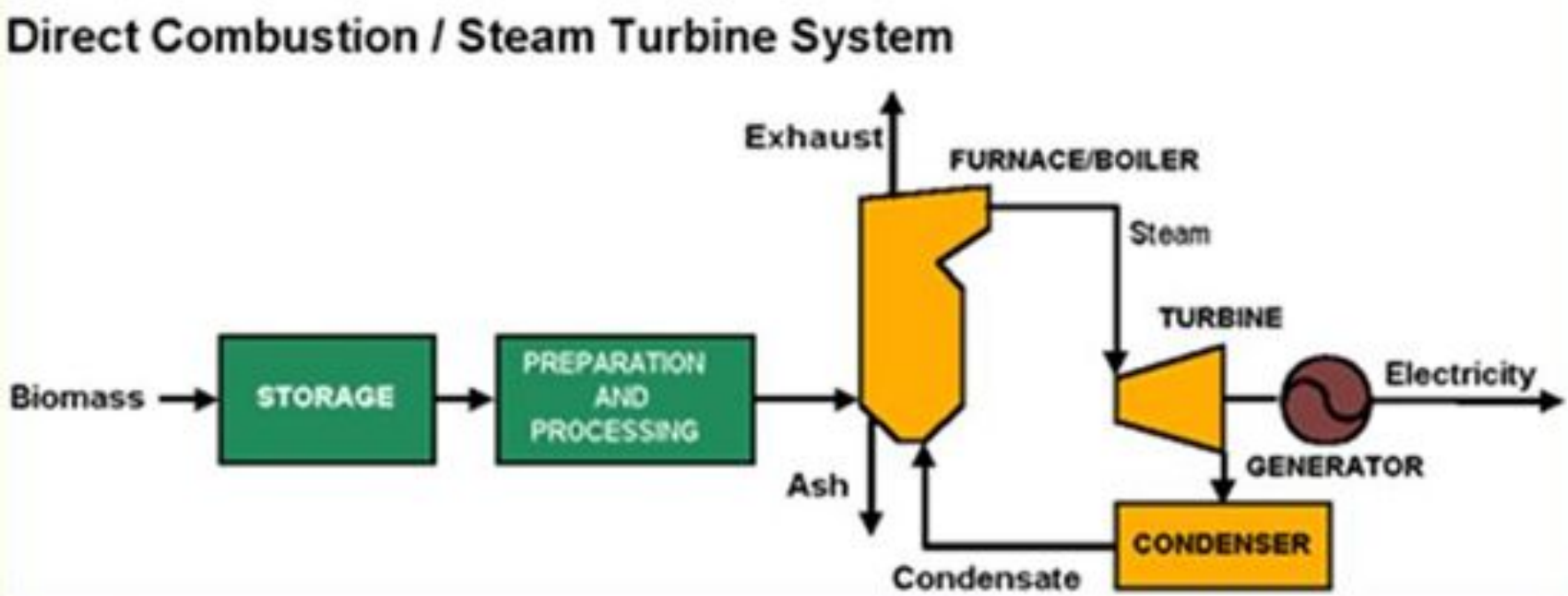

Geothermal energy

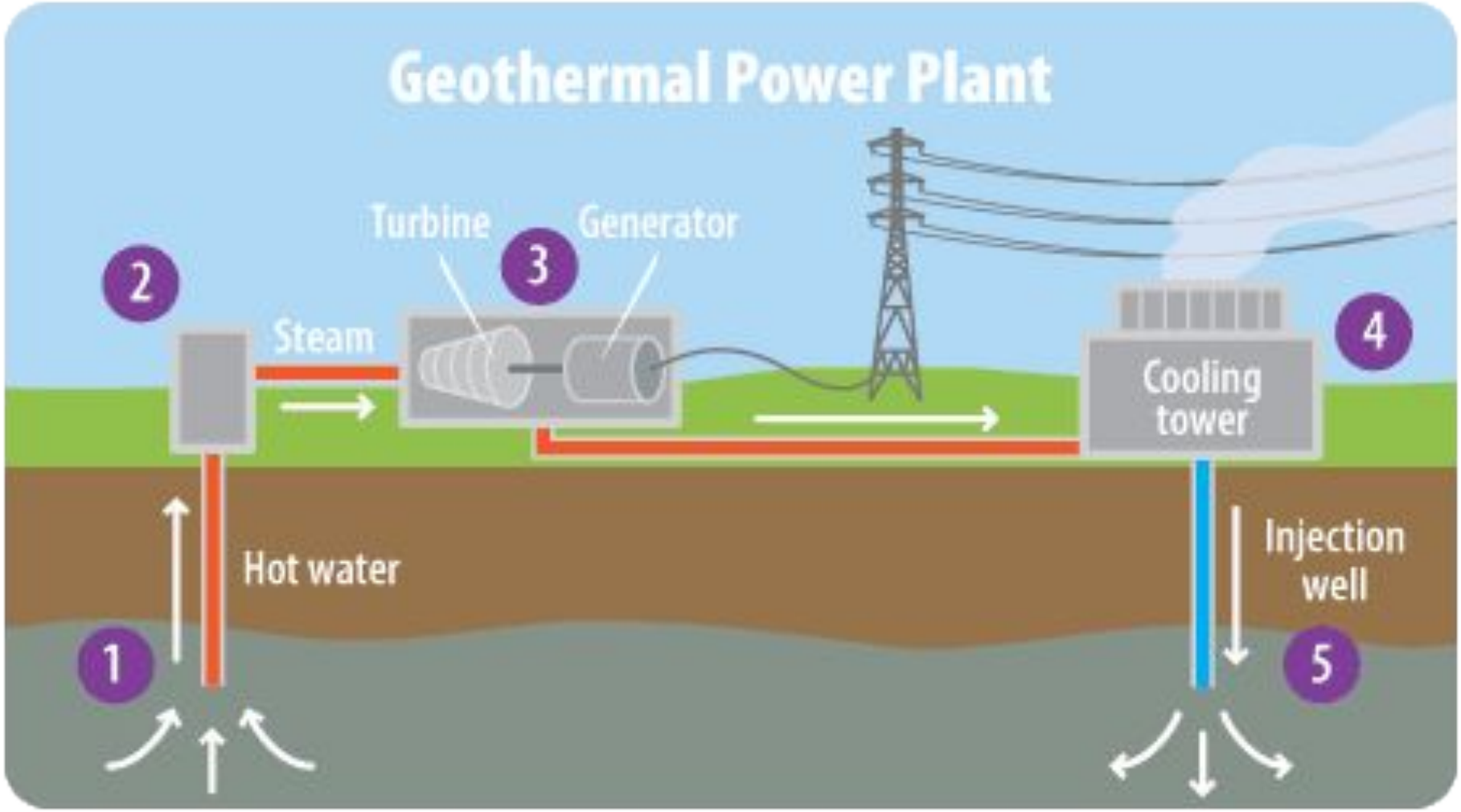

Power Crises in India:

- Faulty Planning
- Sharp increase in demand
- Delay in Power Project
- Inter state disputes
- Erratic Monsoons
- Plant Outages
- Transmission line Losses
- Shortage of coal
- Poor utilization of generating equipment

* Refer books for details

Thank you.