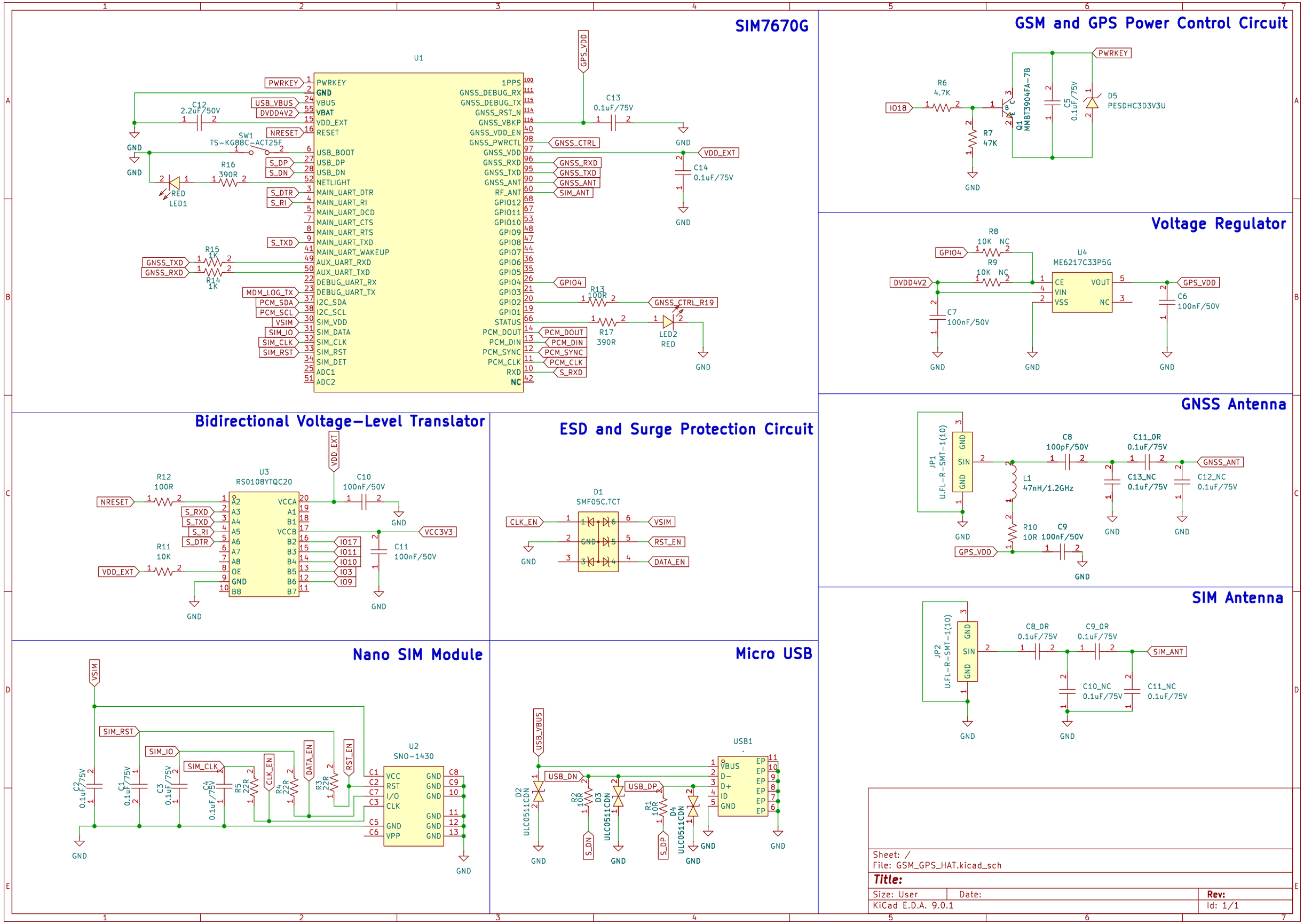

Sheet: /
File: GSM_GPS_HAT.kicad_sch

Title:

Size: User	Date:	Rev:
KiCad E.D.A. 9.0.1		Id: 1/1