Designator	Value	Comment	Description	Footprint	Quantity
		PWM_CONTROL	Header, 6-Pin	B6B-XH-A(LF)(SN)	1
C1, C38, C39, C40, C41	47nF	100V	CL21B104KCFNNNE, MULTILAYER CERAMIC CAPACITORS MLCC - SMD/SMT 100NF 100V 0805 ROHS	0805 - Capacitor	5
C2, C4, C6	2200pF	10V	TDK C2012X7S2A105KT000N, 1UF ±10% 100V X7S 0805 MULTILAYER CERAMIC CAPACITORS MLCC - SMD/SMT ROHS	0805 - Capacitor	3
C3, C5, C21	1uF	100V	TDK C2012X7S2A105KT000N, 1UF ±10% 100V X7S 0805 MULTILAYER CERAMIC CAPACITORS MLCC - SMD/SMT ROHS	0805 - Capacitor	3
C7, C13, C19, C22, C23, C24, C25, C28, C29, C30, C31, C33, C34, C35, C37, C44	0.1uF	100V	CL21B104KCFNNNE, MULTILAYER CERAMIC CAPACITORS MLCC - SMD/SMT 100NF 100V 0805 ROHS	0805 - Capacitor	16
C8, C9, C26	1000pF	10V	TDK C2012X7S2A105KT000N, 1UF ±10% 100V X7S 0805 MULTILAYER CERAMIC CAPACITORS MLCC - SMD/SMT ROHS	0805 - Capacitor	3
C10, C14, C43	100uF	100V	100ZLH100MEFC10X20, Aluminum Electrolytic Capacitors Radial, Can - 10000 Hrs @ 105°C, 100UF 20% 100V , CL21B104KCFNNNE, MULTILAYER CERAMIC CAPACITORS MLCC - SMD/SMT 100NF 100V 0805 ROHS	Electrolytic Cap, 0805 Capacitor	3
C11, C12	2.2uF	10V	Nonpolarized Capacitor	0805 - Capacitor	2
C15, C42	10uF	100V	CL21B104KCFNNNE, MULTILAYER CERAMIC CAPACITORS MLCC - SMD/SMT 100NF 100V 0805 ROHS	0805 - Capacitor	2
C16	15uF	100V	EEU-EE2V150, Aluminum Electrolytic Capacitors Radial, Can - 8000 Hrs @ 105°C, CAP ALUM 15UF 20% 350V RADIAL	Electrolytic Cap	1
C17, C18	28pF	100V	CL21B104KCFNNNE, MULTILAYER CERAMIC CAPACITORS MLCC - SMD/SMT 100NF 100V 0805 ROHS	0805 - Capacitor	2
C20	10nF	10V	C0805C103K8RAC7800 . 10000pF ±10% 10V Ceramic Capacitor X7R 0805 (2012 Metric)	0805 - Capacitor	1
C27	4.7uF	100V	TDK C2012X7S2A105KT000N, 1UF ±10% 100V X7S 0805 MULTILAYER CERAMIC CAPACITORS MLCC - SMD/SMT ROHS	1210 - Capacitor	1
D1		150080SS75000	SMD mono-color Chip LED, WL-SMCW, Super Red	0805_A	1
P1, P3, P6, P7, P8		M4x3mm	WP-THRBU REDCUBE THR internal through-hole thread, 10x10mm, M4x3mm, 8 pins, 85A	74650094	5
P2		CAN	Header, 4-Pin	b4b-xh	1
P4		PROGRAMMING	Header, 7-Pin	HDR1X7	1
P5		DM3D-SF	CONN MICRO SD CARD PUSH-PULL	FP-DM3D-SF-MFG	1
Q1, Q2, Q3, Q4, Q5, Q6		NMOS-2	N-Channel Power MOSFET	TO254P1651X1067X470-3	6
R1, R2, R4, R5, R6, R10, R14, R24, R25, R26, R31, R37	10k	10k	Resistor	0603 - Resistor	12
R3	330	330	Resistor	0603 - Resistor	1
R7, R15, R17, R19	500u	500u	Resistor	RESC6430X66N	4
R9, R34, R35, R36	2.2k	2.2k	Resistor	0603 - Resistor	4
R11, R23	100	100	Resistor	0603 - Resistor	2
R13, R30, R32, R33	50k	50k	Resistor	0603 - Resistor	4
R16	120	500m	Resistor	0603 - Resistor	1
R18, R27, R28, R29	500m	500m	Resistor	0603 - Resistor	4
R20, R21, R22	56	56	Resistor	0603 - Resistor	3
RT1, RT2, RT3, RT4, RT5, RT6, RT7, RT8		10k	NTC Thermistor for Temperature Sensor, SMD 0603, 10kΩ	ERT-J1VG103JA	8
S1		Switch - Push Button	Push Button Switch	6x6mm Switch	1
U1		LIS3DHTR	Accelerometer	LIS3DHTR	1
U2			Integrated Circuit	TJA1051T/3,118	1
U3		STM32F405RGT6	ST 64-pin Micro	STM32F405RG	1
U4		TLV1117-33IDCYR	Linear Voltage Regulator IC 3.3V 800MA SOT223-4	TLV1117	1
U5		DRV8323SRTAT	Multiphase Motor Driver Power MOSFET SPI 40-WQFN _6x6_	DRV8323SRTAT	1
U6		INA180	0V to 26V Current Sense Amplifier	INA180	1
U8		TMUX1208PWR	Integrated Circuit	SOP65P640X120-16N	1
U9		LM324AMX/NOPB	Gen Purp 4Ch Opamp	LM324AMX/NOPB	1
Y1		ABM3-16.000MHZ-B2-T	16MHz Â±20ppm Crystal 18pF 40 Ohms 2-SMD, No Lead	ABM3-16.000MHZ-B2-T	1

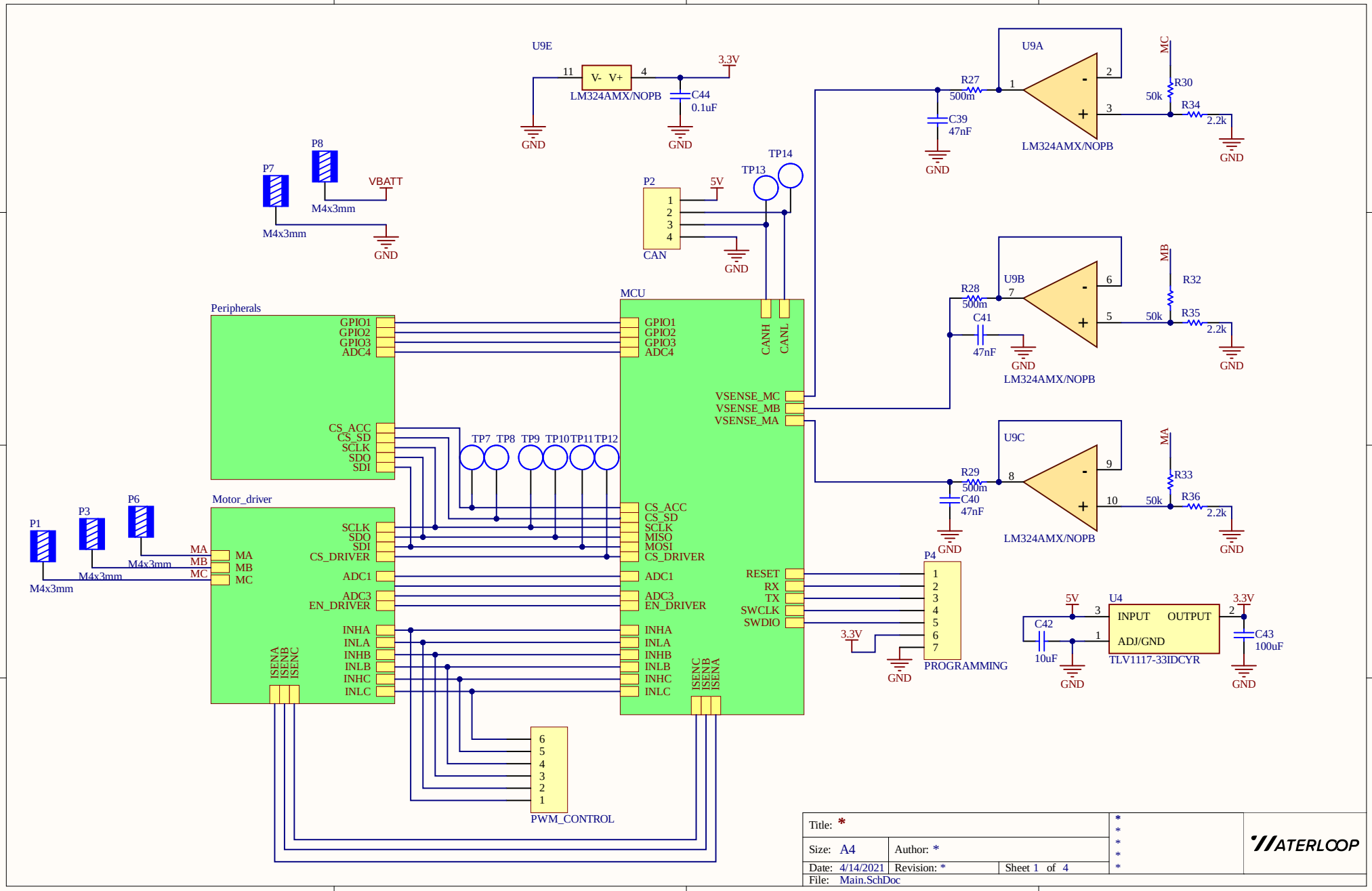
U9E
LM324AMX/NOPB
C44
0.1uF
3.3V
GND
P7
P8
VBATT
M4x3mm
P2
CAN
5V
TP13
TP14
U9A
U9B
U9C
R27
R28
R29
500m
C39
C41
C40
47nF
R30
R32
R33
R34
R35
R36
50k
2.2k
MC
MB
MA
Peripherals
GPIO1
GPIO2
GPIO3
ADC4
CS_ACC
CS_SD
SCLK
SDO
SDI
MCU
CANH
CANL
VSENSE_MC
VSENSE_MB
VSENSE_MA
MISO
MOSI
CS_DRIVER
ADC1
ADC3
EN_DRIVER
INHA
INLA
INHB
INLB
INHC
INLC
ISENA
ISENB
ISENC
RESET
RX
TX
SWCLK
SWDIO
TP7
TP8
TP9
TP10
TP11
TP12
Motor_driver
P1
P3
P6
P4
PROGRAMMING
U4
INPUT
OUTPUT
ADJ/GND
TLV1117-33IDCYR
C42
10uF
C43
100uF
PWM_CONTROL
Title: *
Size: A4
Author: *
Date: 4/14/2021
Revision: *
Sheet 1 of 4
File: Main.SchDoc
WATERLOOP

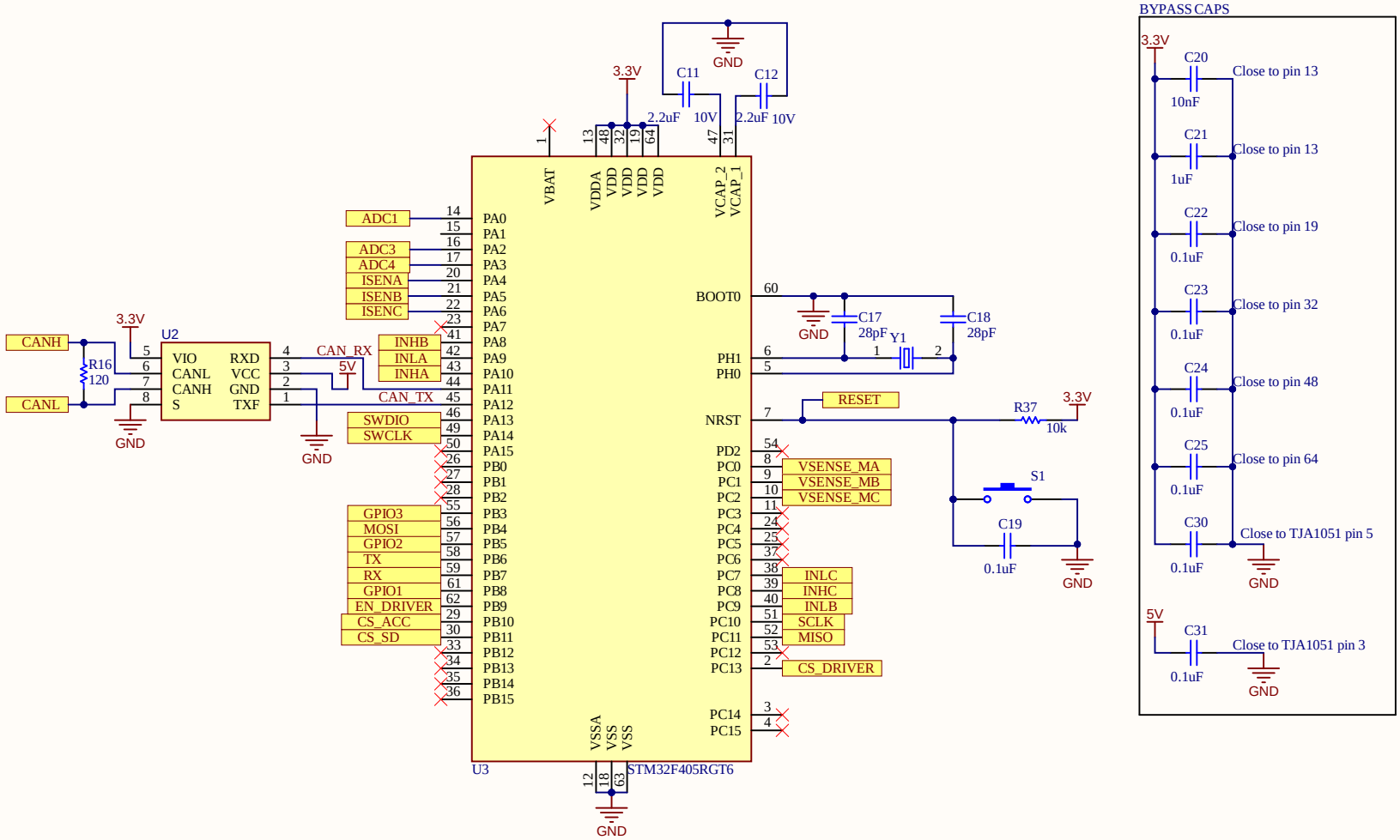

Title: *			
Size: A4	Author: *		
Date: 4/14/2021	Revision: *	Sheet 2 of 4	
File: MCU.SchDoc			

WATERLOOP

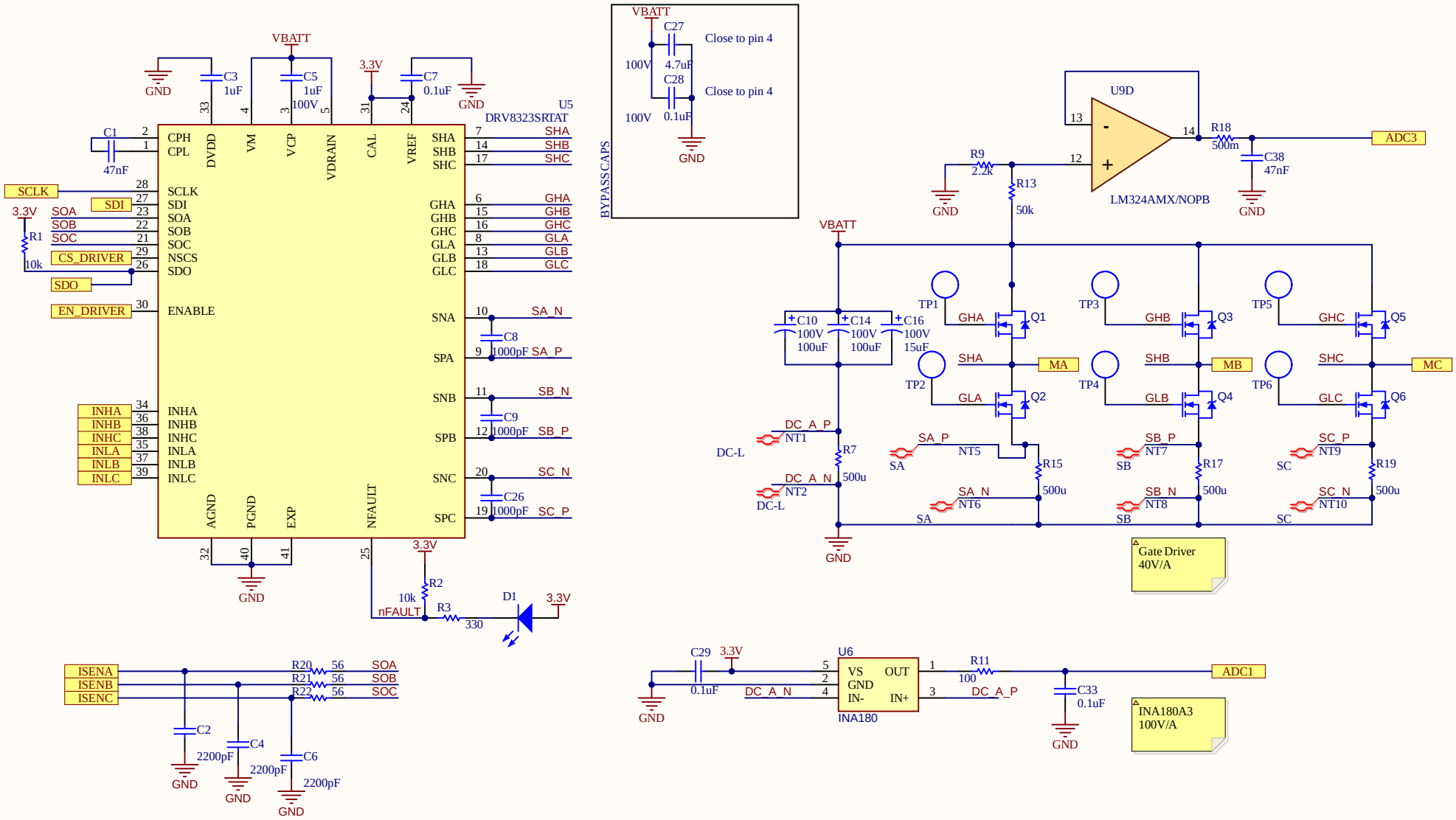

Title: *			
Size: A4	Author: *		
Date: 4/14/2021	Revision: *	Sheet 3 of 4	
File: Motor_driver.SchDoc			

WATERLOOP

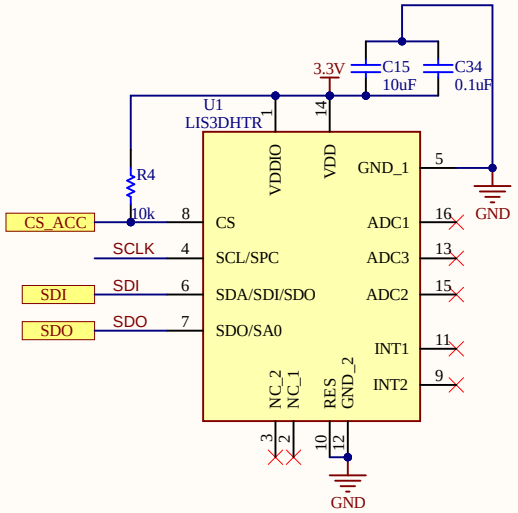

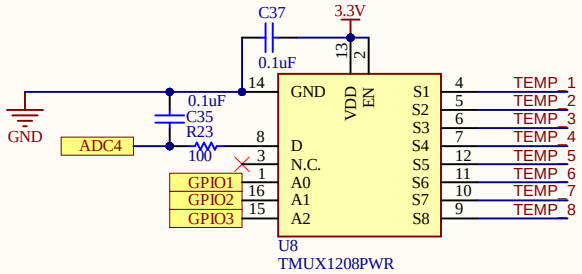

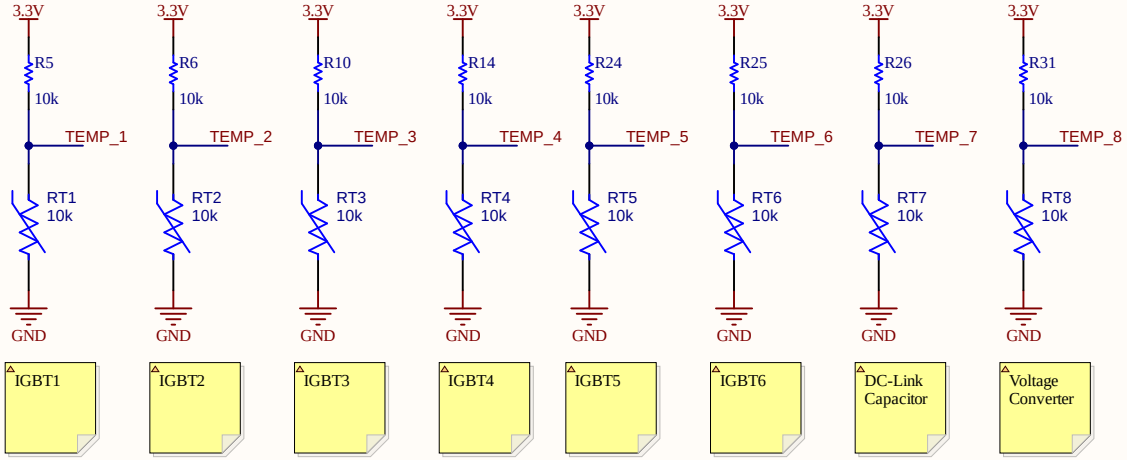

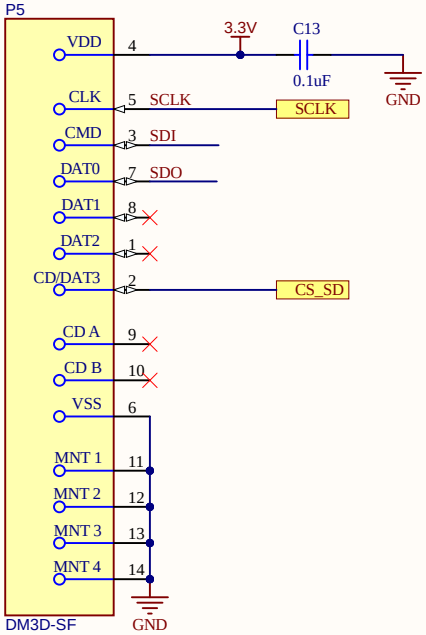

Title: *			
Size: A4	Author: *		
Date: 4/14/2021	Revision: *	Sheet 4 of 4	
File: Peripherals.SchDoc			

WATERLOOP

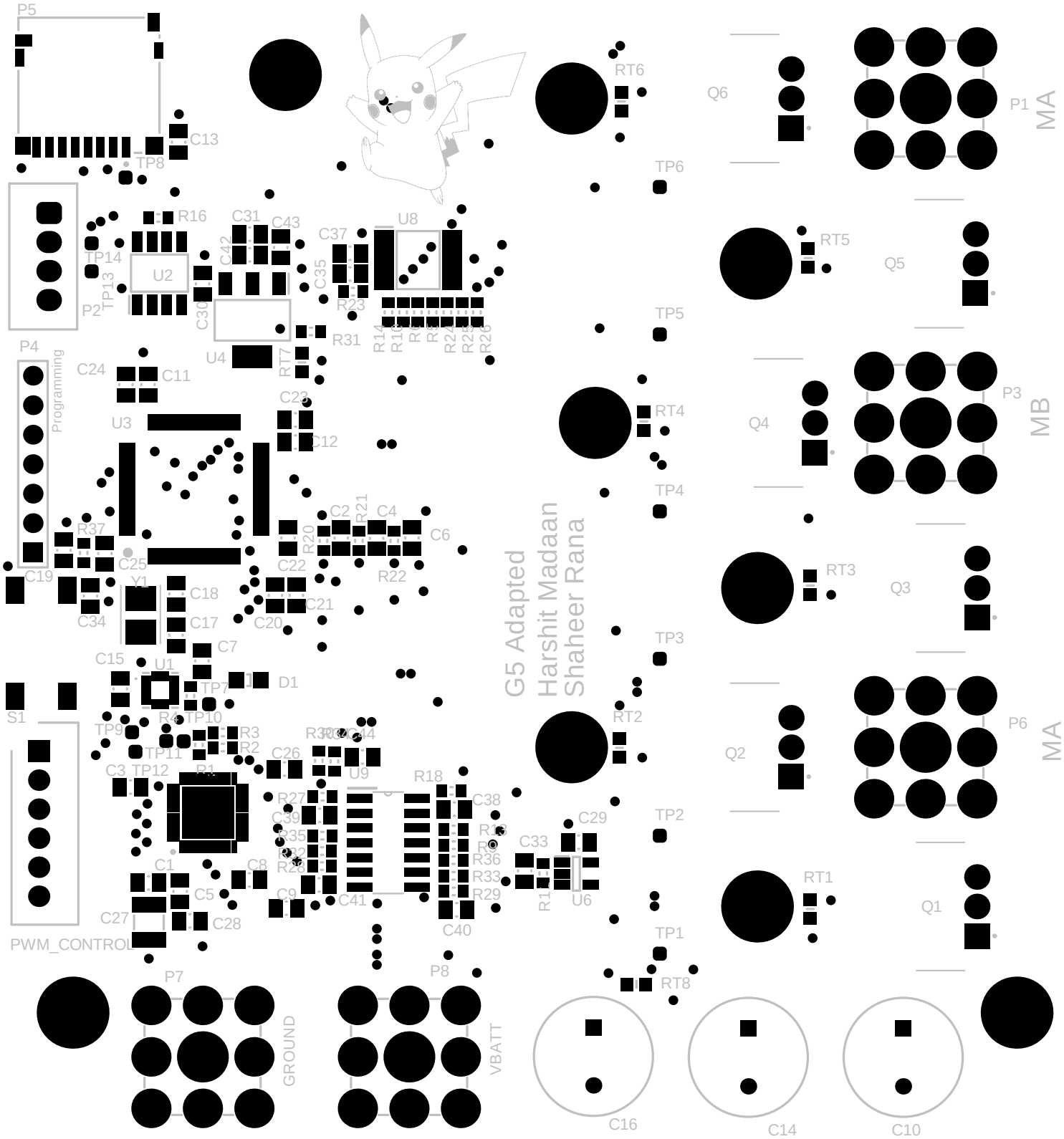
G5 Adapted
Harshit Madaan
Shaheer Rana
P5
C13
TP8
P2
TP14
TP13
R16
U2
C31
C43
C42
C30
U4
C37
C35
U8
R23
R31
RT7
R14
R15
R21
R22
R25
R26
P4
Programming
C24
C11
U3
C22
C12
C2
R21
C4
C6
R37
C25
C19
Y1
C18
C17
C7
C34
C20
C21
R20
R22
C15
U1
D1
TP7
S1
TP9
R4
TP10
R3
R2
TP11
C26
C3
TP12
R1
U9
R18
C38
R27
C39
R35
R32
R28
C1
C8
C5
C9
C41
C40
R38
R36
R33
R29
C33
C29
R11
U6
C27
C28
PWM_CONTROL
P7
GROUND
P8
VBATT
RT6
TP6
RT5
TP5
RT4
TP4
RT3
TP3
RT2
TP2
RT1
TP1
RT8
C16
C14
C10
Q6
P1
MA
Q5
Q4
P3
MB
Q3
Q2
P6
MA
Q1

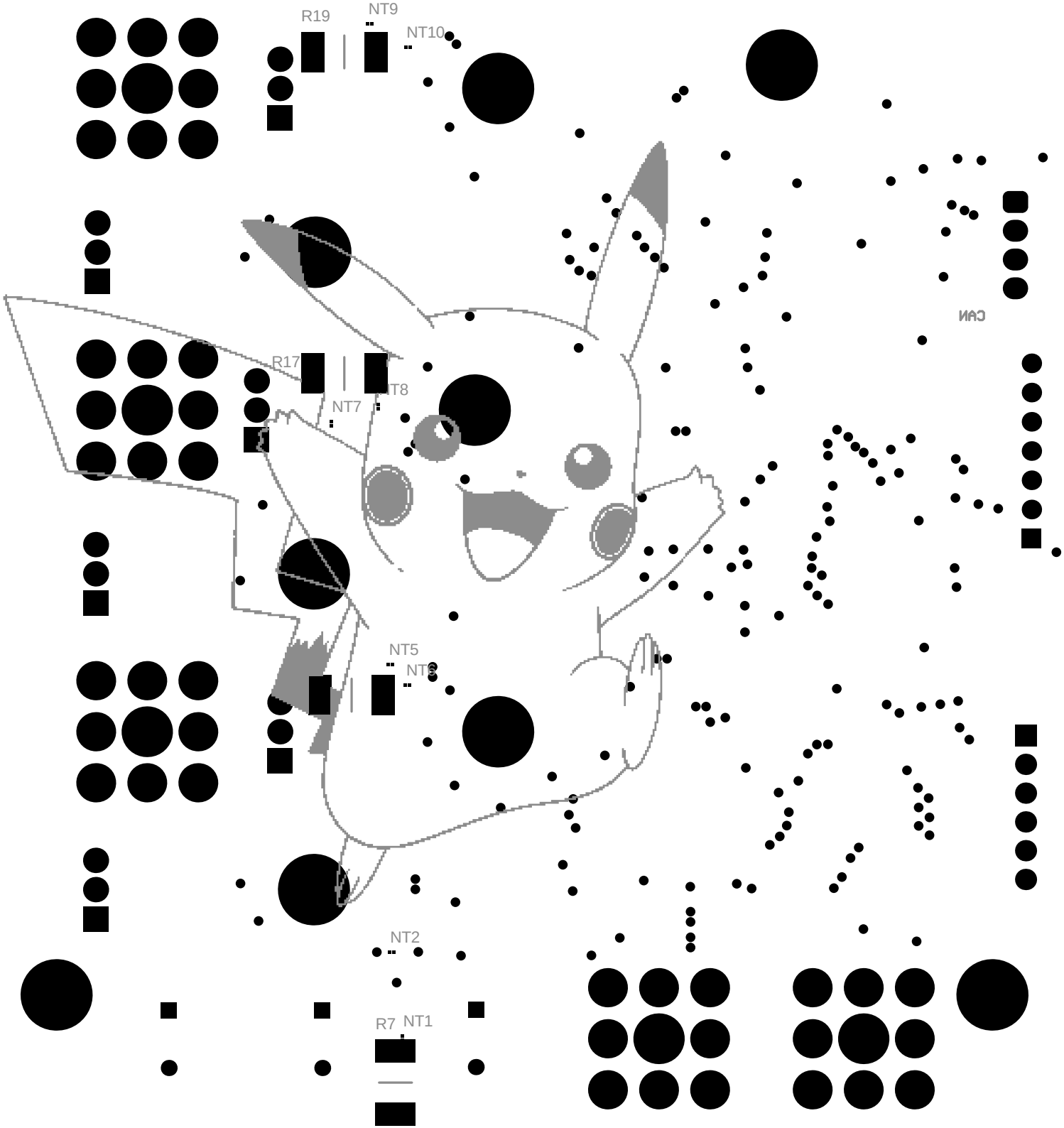

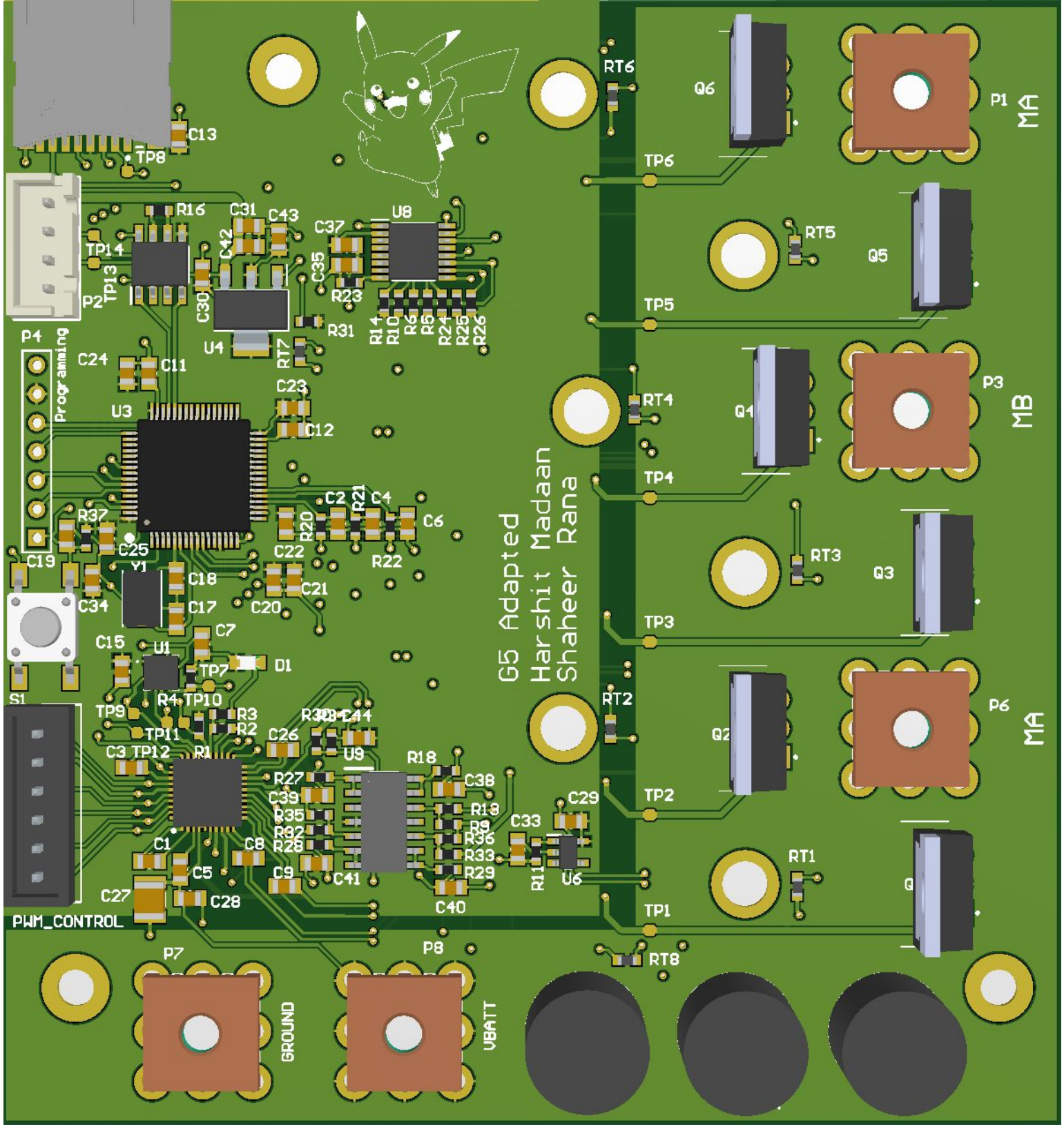
G5 Adapted
Harshit Madaan
Shaheer Rana
Programming
PWM_CONTROL
GROUND
VBATT
MA
MB
MA
P1
P2
P3
P4
P6
P7
P8
S1
U1
U3
U4
U6
U8
U9
Y1
Q1
Q2
Q3
Q5
Q6
RT1
RT2
RT3
RT4
RT5
RT6
RT7
RT8
TP1
TP2
TP3
TP4
TP5
TP6
TP7
TP8
TP9
TP10
TP11
TP12
TP13
TP14

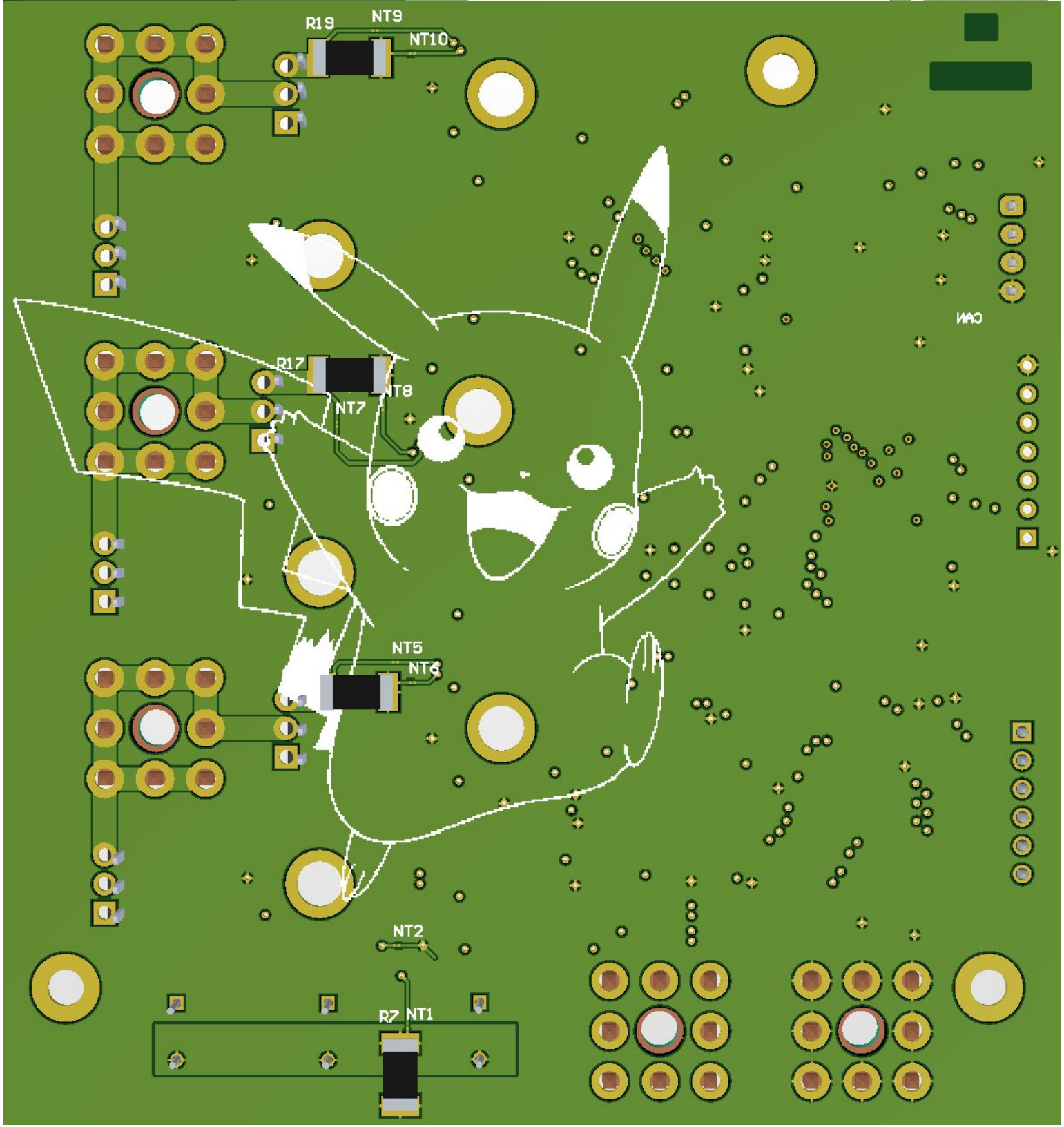
R19
NT9
NT10
R17
NT8
NT7
NT5
NT6
NT2
R7
NT1
CAM