Design and Implementation of a 1×8 Demultiplexer in CMOS

Md. Shahriar Kibria Jawwad
Department of Electronics & Telecommunication Engineering
Student ID : 2008024
Email: u2008024@student.cuet.ac.bd
Chittagong University of Engineering & Technology (CUET)
Chattogram 4349, Bangladesh

***Abstract*—This report documents the transistor-level implementation and verification of a 1×8 demultiplexer in a standard CMOS process. The submission contains the Cadence Virtuoso schematic and symbol, the completed full-custom layout, RC-parasitic extraction and post-layout simulations, and power measurements. Both functional and post-layout results show that the input signal is routed correctly to the addressed output and that the design satisfies the intended power and timing targets.**

***Index Terms*—1×8 demultiplexer, CMOS, layout, RC extraction, post-layout simulation, power analysis**

I. Introduction

A demultiplexer routes a single data input to a chosen output under the control of select inputs. The 1×8 variant employs three select lines (S_2, S_1, S_0) to address outputs $Y_0 \ldots Y_7$. The design is realized at the transistor level using static CMOS and follows a flat schematic approach (no hierarchy). The goals are to demonstrate correct functionality, perform parasitic-aware post-layout verification, and present measured post-layout power.

II. Design methodology

The boolean realization uses a single data input D, three select lines, and eight enable terms $f_i(S_2, S_1, S_0)$ such that

$$Y_i = D \cdot f_i(S_2, S_1, S_0), \quad i = 0, \ldots, 7.$$

Select signal complements are produced with inverters. AND logic was implemented in static CMOS; transistor lengths follow foundry minimums and transistor widths were chosen to satisfy drive and layout-abutment requirements. The full transistor-level schematic is provided in the submitted Cadence library.

III. Schematic and symbol

The majority logic is composed of four-input AND gates, each realized using a NAND–inverter structure. The NAND stage is implemented in static CMOS with four series NMOS transistors forming the pull-down network (PDN) and four parallel PMOS transistors forming the pull-up network (PUN). NMOS devices are widened (240 nm) to offset the higher resistance of the series stack, while PMOS devices (480 nm) are sized for balanced rise times. The custom symbol exposes D, S_2, S_1, S_0, $Y_0 \ldots Y_7$, and the power rails.

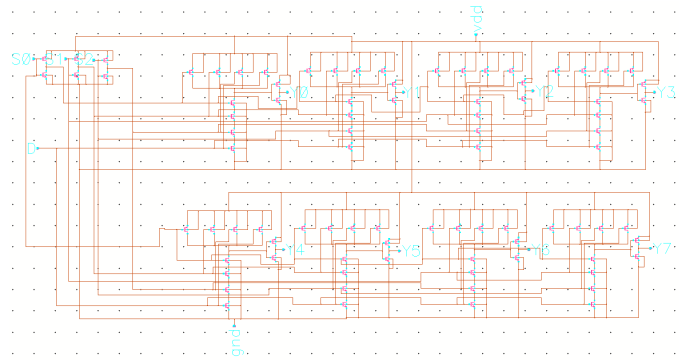

Fig. 1. Transistor-level schematic of the 1×8 demultiplexer designed in Cadence Virtuoso.

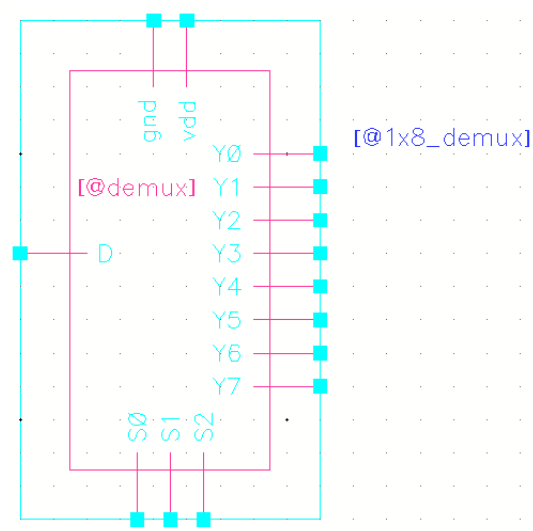

Fig. 2. Custom symbol of the 1×8 demultiplexer created in Virtuoso for hierarchical design and block-level integration.

IV. Layout and verification

The custom layout was directly obtained from the schematic with appropriate P-substrate location for NMOS devices and common N-well for PMOS devices. Two transistor-wide rows were employed for easy routability and for compact layout geometry. Seven metal layers were employed for signal,

power, and interconnect routability with strict compliance with foundry design rule requirements. Source–drain connections of the cells for the four-input NAND were checked using netlist-driven verification for maintaining correct parallel–series connectivity, along with correct device orientation.Design Rule Check (DRC) completed without violations, and Layout Versus Schematic (LVS) confirmed full netlist equivalence between the schematic and layout.

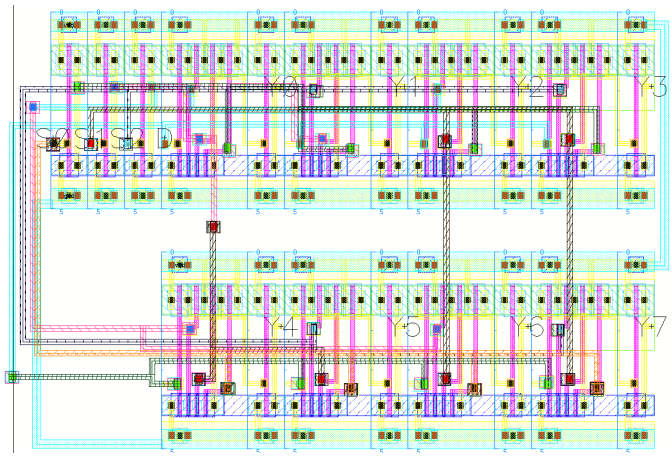

Fig. 3. Top-level layout view of the 1×8 demultiplexer showing poly, diffusion, and metal routing.

V. Extraction and post-layout simulation

Post-layout verification was then carried out using parasitic extraction (RCX) on the completed layout to obtain an RC-extracted netlist of interconnect capacitances and resistance values. Transient simulations for post-layout were then run using the same testbench from the pre-layout verification work. The inclusion of parasitics enabled more accurate delay and dynamic power estimation, confirming that the design maintained correct logical functionality with acceptable post-layout performance.

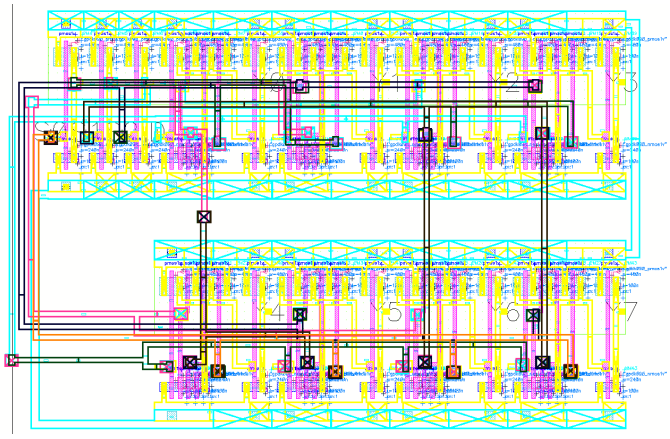

Fig. 4. RC-extracted layout view used for post-layout simulation, showing parasitic elements.

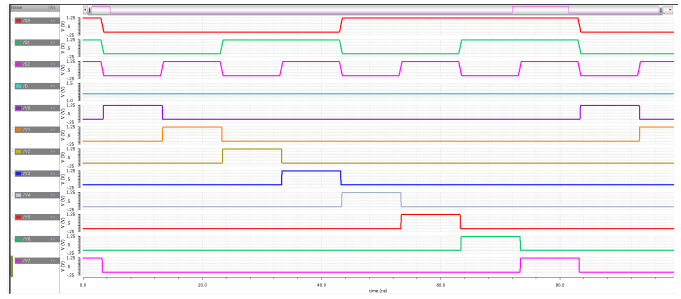

Fig. 5. Post-layout transient simulation waveforms obtained from the RC-extracted view in ADE L, showing the input data D, select signals (S_2, S_1, S_0), and the corresponding active output Y_k.

Post-layout simulation confirms correct signal routing: for a given select code k, the corresponding output Y_k accurately follows the input D, while all other outputs remain at 0,V. Minor timing shifts due to interconnect RC parasitics are observed, but they remain well within acceptable limits for the selected operating conditions.

VI. Power Analysis

The 1×8 demultiplexer average power was obtained from post-layout simulation using RC-extraction with the help of ADE power probes. Input stimulus was representative activity with 50% duty cycle approximation. Post-layout extracted netlist results are:

Average power (post-layout, extracted): $4.915\ \mu\text{W}$

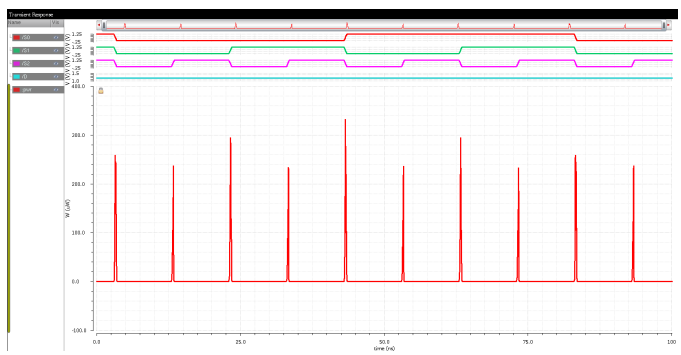

Fig. 6. Post-layout extracted simulation showing instantaneous power alongside input D and select lines S_2, S_1, S_0. The average power was determined from this trace.

VII. Conclusion

The 1×8 demultiplexer was simulated at transistor level and verified with post-layout RC-extracted simulations. The layout also passes DRC and LVS verification checks. Post-layout simulations confirm correct schematic-level design functionality. The average power, measured as reported earlier, exhibits good performance. The design is complete, fully verified, and ready for implementation into larger digital schemes.

Acknowledgment

Supervision provided by Arif Istiaque, Assistant Professor, Department of ETE, CUET. Cadence Virtuoso access was provided by the VLSI laboratory resources.

REFERENCES

[1] L. E. M. Brackenbury, *Design of VLSI Systems — A Practical Introduction*, 1st ed. New York, NY, USA: Springer, 2003.

[2] N. H. E. Weste and D. M. Harris, *CMOS VLSI Design: A Circuits and Systems Perspective*, 4th ed. Boston, MA, USA: Addison-Wesley, 2011.

[3] D. A. Pucknell and K. Eshraghian, *Basic VLSI Design*, 3rd ed. New York, NY, USA: Prentice Hall, 2003.

[4] Electronics-Tutorials, "Demultiplexer (DEMUX)," https://electronics-tutorials.ws/combination/comb_3.html. [Accessed: Oct. 5, 2025].