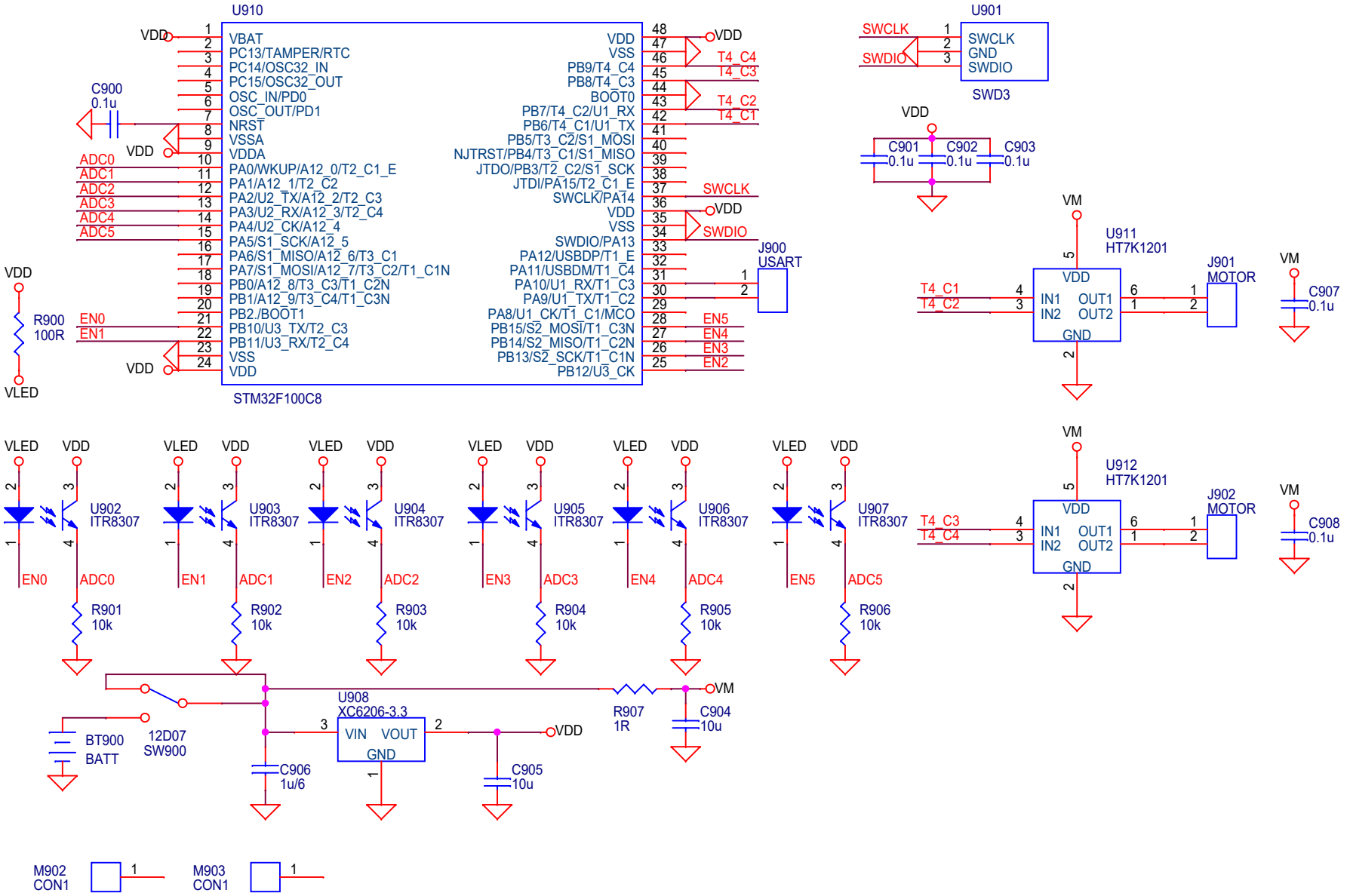

Size	Document Number	Rev
A4	<Doc>	<RevC

Date: Wednesday, July 01, 2020 Sheet 1 of 1