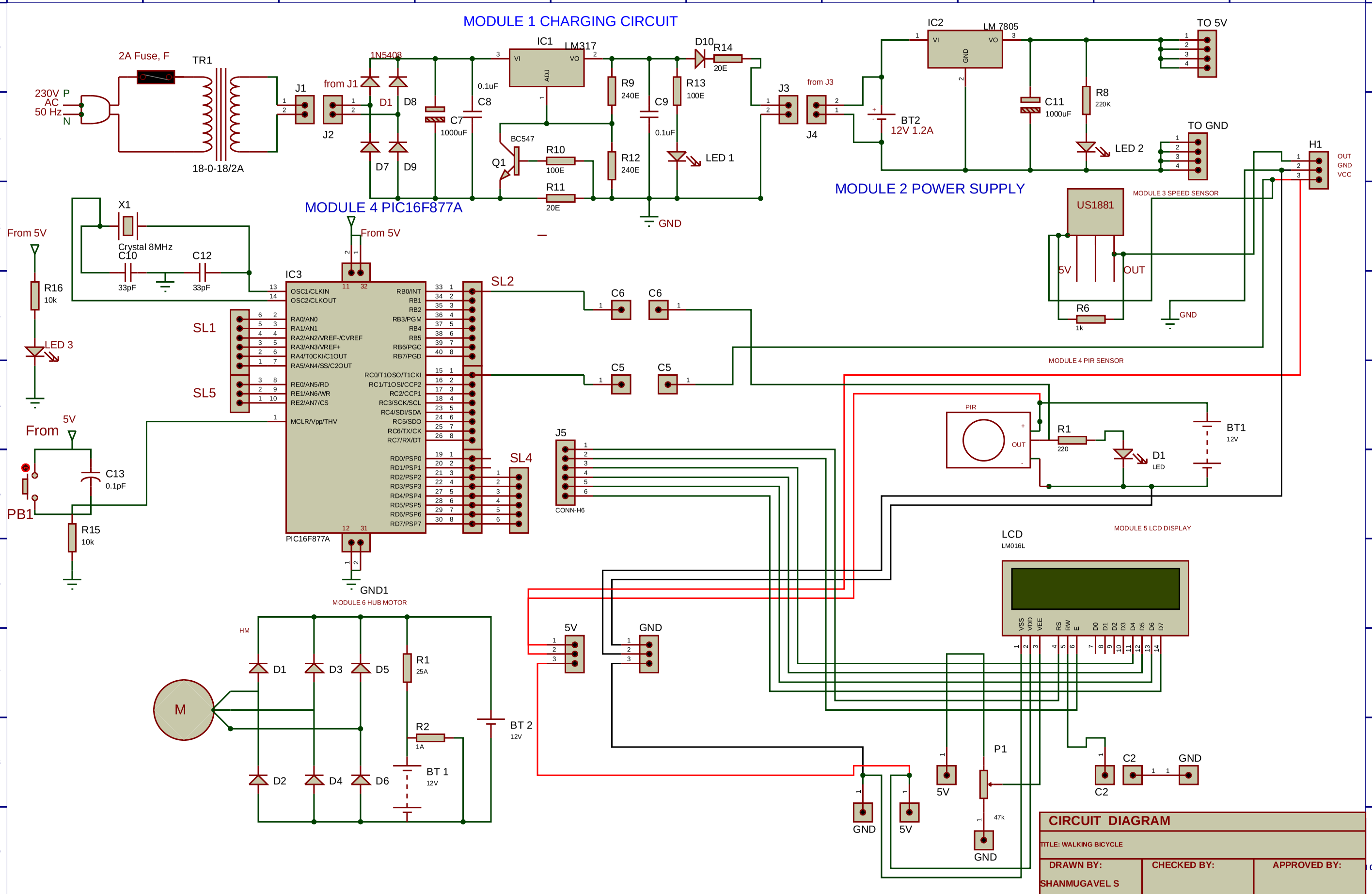
MODULE 1 CHARGING CIRCUIT
2A Fuse, F
TR1
230V P
AC
50 Hz
N
18-0-18/2A
J1
J2
from J1
1N5408
D1
D8
D7
D9
C7
1000uF
C8
0.1uF
IC1
LM317
VI
VO
ADJ
R9
240E
R12
240E
C9
0.1uF
R13
100E
D10
R14
20E
LED 1
BC547
Q1
R10
100E
R11
20E
GND
J3
J4
from J3
IC2
LM 7805
VI
VO
GND
BT2
12V 1.2A
C11
1000uF
R8
220K
LED 2
TO 5V
TO GND
MODULE 2 POWER SUPPLY
H1
OUT
GND
VCC
MODULE 3 SPEED SENSOR
US1881
5V
OUT
R6
1k
GND
MODULE 4 PIC16F877A
From 5V
X1
Crystal 8MHz
C10
33pF
C12
33pF
R16
10k
LED 3
IC3
OSC1/CLKIN
OSC2/CLKOUT
RA0/AN0
RA1/AN1
RA2/AN2/VREF-/CVREF
RA3/AN3/VREF+
RA4/T0CKI/C1OUT
RA5/AN4/SS/C2OUT
RE0/AN5/RD
RE1/AN6/WR
RE2/AN7/CS
MCLR/Vpp/THV
RB0/INT
RB1
RB2
RB3/PGM
RB4
RB5
RB6/PGC
RB7/PGD
RC0/T1OSO/T1CKI
RC1/T1OSI/CCP2
RC2/CCP1
RC3/SCK/SCL
RC4/SDI/SDA
RC5/SDO
RC6/TX/CK
RC7/RX/DT
RD0/PSP0
RD1/PSP1
RD2/PSP2
RD3/PSP3
RD4/PSP4
RD5/PSP5
RD6/PSP6
RD7/PSP7
PIC16F877A
SL1
SL5
SL2
SL4
C6
C5
From 5V
C13
0.1pF
PB1
R15
10k
GND1
MODULE 4 PIR SENSOR
PIR
OUT
R1
220
D1
LED
BT1
12V
J5
CONN-H6
MODULE 5 LCD DISPLAY
LCD
LM016L
VSS
VDD
VEE
RS
RW
E
D0
D1
D2
D3
D4
D5
D6
D7
5V
GND
P1
47k
C2
MODULE 6 HUB MOTOR
HM
M
D1
D3
D5
D2
D4
D6
R1
25A
R2
1A
BT 1
12V
BT 2
12V
CIRCUIT DIAGRAM
TITLE: WALKING BICYCLE
DRAWN BY:
SHANMUGAVEL S
CHECKED BY:
APPROVED BY: