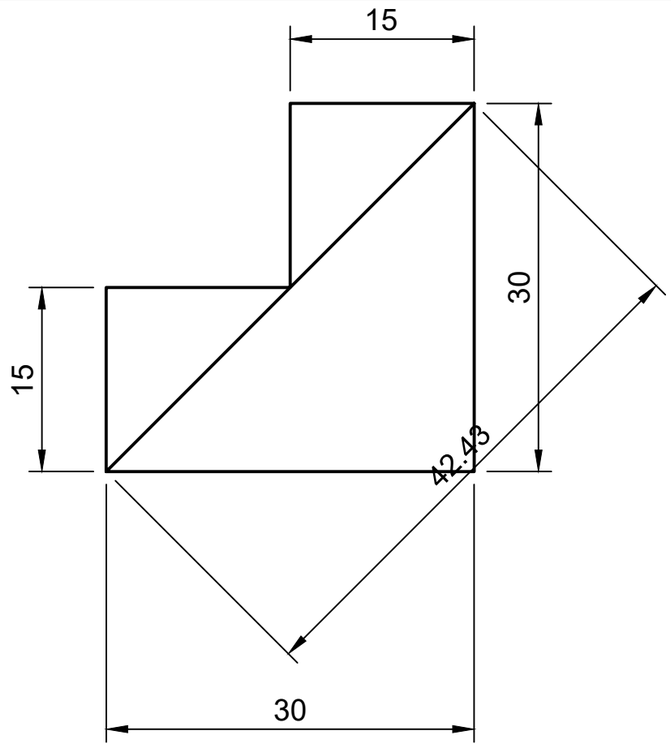

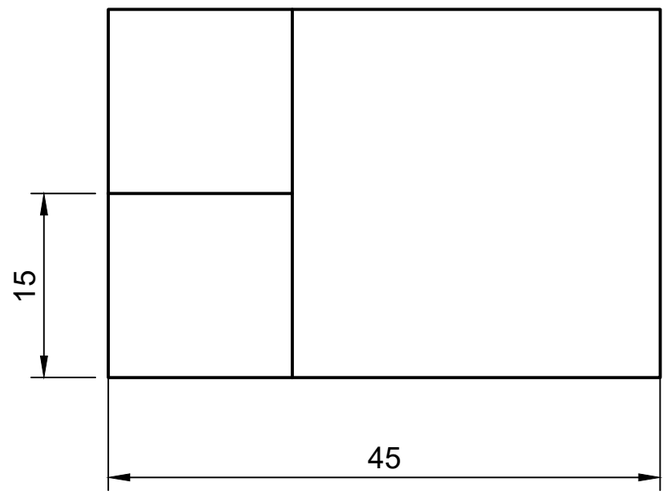

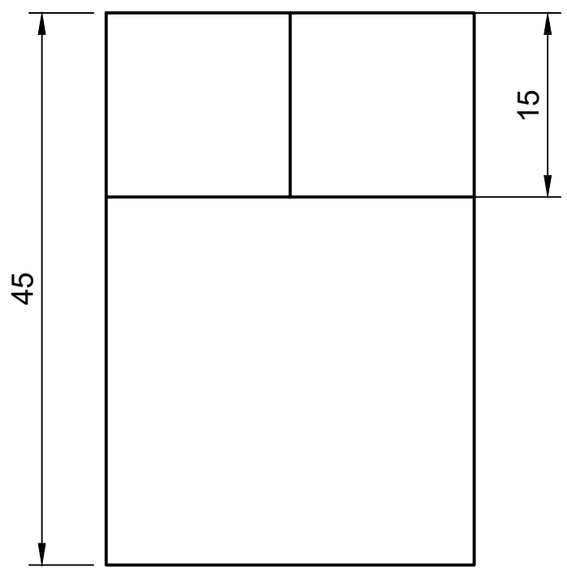

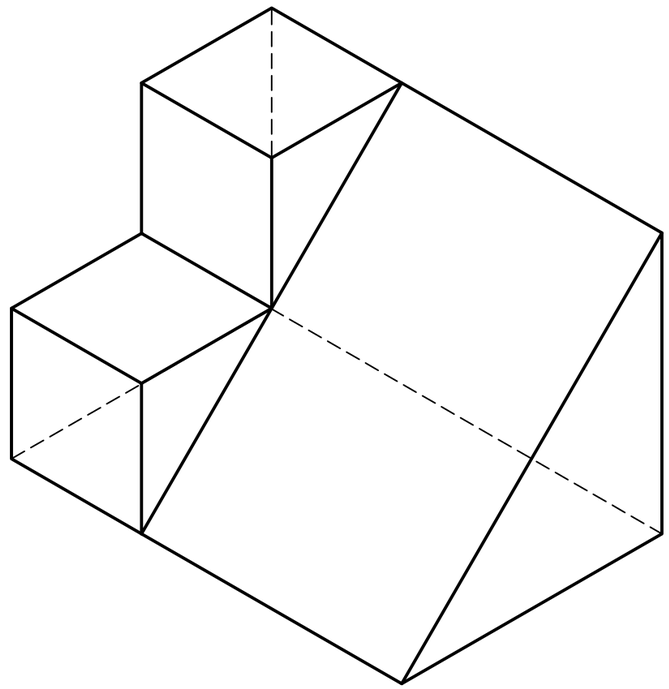

Dept.	Technical reference	Created by Shantanusinh Parmar 22-06-2023	Approved by
		Document type	Document status
		Title DES_104	DWG No.
			Rev. / Date of issue / Sheet 1/1