AUTONOMOUS BOT

A V S Padma sri
dept. of Electronics and Communication
RGUKT (IIIT)
Nuzvid, Eluru
n190555@rguktn.ac.in

S Venkatesh
dept. of Electronics and Communication
RGUKT (IIIT)
Nuzvid, Eluru
n190549@rguktn.ac.in

K Shanthi priya
dept. of Electronics and Communication
RGUKT (IIIT)
Nuzvid, Eluru
n190856@rguktn.ac.in

V Ashok
dept. of Electronics and Communication
RGUKT (IIIT)
Nuzvid, Eluru
n190559@rguktn.ac.in

Under the guidence of
Mr.Shyam perika
Head of the Dept
Electronics and Communication Engineering
Nuzvid, Eluru
hodece@rguktn.ac.in

***Abstract*—This project utilizes the FPGA DE10 Nano board to create an autonomous bot featuring a robust line-following algorithm and mobile control interface. Infrared sensors enable precise path tracking, ensuring optimal navigation. The FPGA's real-time processing capability facilitates seamless coordination between the line-following system and the wireless mobile control interface. The result is a versatile robotic system capable of autonomous navigation and user-directed movements. This project's significance lies in its potential applications across warehouse automation, education, and scenarios requiring a blend of autonomous and manual control.**

***Index Terms*—autonomous, FPGA, Line follower, Mobile controlled, UART, Chasis, L298N motor driver**

I. Introduction

In the realm of robotics, the integration of sophisticated technologies such as Field-Programmable Gate Arrays (FPGAs) has paved the way for the development of advanced autonomous systems. This project focuses on leveraging the power of the FPGA DE10 Nano board to create a versatile autonomous bot with dual functionalities: precise line following and responsive mobile control. By utilizing infrared sensors, the bot adeptly navigates predefined paths, and the FPGA's real-time processing prowess ensures seamless coordination between autonomous and user-directed movements. This introduction sets the stage for exploring the design, implementation, and significance of this innovative fusion of FPGA technology and robotics, promising applications across domains like warehouse automation and education.

II. Literature Survey

FPGA-Based Autonomous Bot with Line-Following and Mobile Control

A. FPGA Applications in Robotics:

Previous research has extensively explored the integration of Field-Programmable Gate Arrays (FPGAs) in robotics[1].Enhances real-time processing capabilities of FPGAs, providing a solid foundation for the development of agile and responsive robotic systems.

B. FPGA DE10 Nano Board in Robotics:

Specific research on the FPGA DE10 Nano board in robotics applications is limited but promising.[2]This study contributes to understanding the features and challenges associated with using the FPGA DE10 Nano board.

C. Line Following Algorithms:

A comprehensive investigation into line-following algorithms reveals evolution of infrared sensor-based navigation strategies.[3]These studies delve into the efficiency and adaptability of various algorithms, offering insights into the optimal design for precise path tracking in autonomous robots.

D. Wireless Communication for Mobile Control:

The literature on wireless communication protocols for remote control in robotics is well-documented.[4][5] These studies provide valuable considerations for implementing a seamless wireless mobile control interface.

E. Analysis table

There are many justifications for using robots, but most importantly is to protect people from working in hazardous places and dealing with dangerous substances such as explosive chemicals and radioactive material. Mobile robots need speed/position controller that needs to be efficient and robust. There are several choices available for controller hardware implementation as a result of the continuous evolution of technologies. Mainly there are three methodologies available, ASICs which refers to Application Specific Integrated Circuits, general-purpose microprocessors and microcontrollers and finally Field Programmable Gate Array (FPGA). The first choice is very efficient and provides very high performance, but still costly and less flexible option [7]

III. Problem Statement

Existing robotic systems lack a unified solution for both precise line-following in structured environments and responsive mobile control in diverse scenarios.

FEATURES	ALGORITHM USED	DIFFERENCE
PROPOSED MODEL	UART Receiver Algorithm	Manual controlled Autonomous Robot
Analysis 1 [7]	Fuzzy Logic based Obstacle Avoidance Algorithm	Mobile Robot with ANN(Artificial Neural Network)
Analysis 2 [8]	Encode mobile robot control signals with (71,36,11) quadratic residue (QR) Algorithm	Encode mobile robot control signals with (71,36,11) quadratic residue (QR) codes

Fig. 1. logic

IV. Implementation Methodology

A. Line Follower robot

- Connected the line sensors to GPIO pins on the DE10-Nano board. Use digital input pins for reading sensor data.
- Connected the IR LEDs to GPIO pins or power pins on the DE10- Nano board to supply power and control their activation.
- Motor driver to the FPGA's GPIO pins for motor control. This typically involves connecting input pins to control the motor's direction and speed.
- The motor driver should control the voltage and direction for each motor.
- Ensure you have a suitable power supply for both the DE10-Nano board and the motors. Connected and distribute power as needed for each component.

Right IR Sensor	Left IR Sensor	Movement
0	0	Stop
0	1	Right
1	0	Left
1	1	Forward

Fig. 2. logic

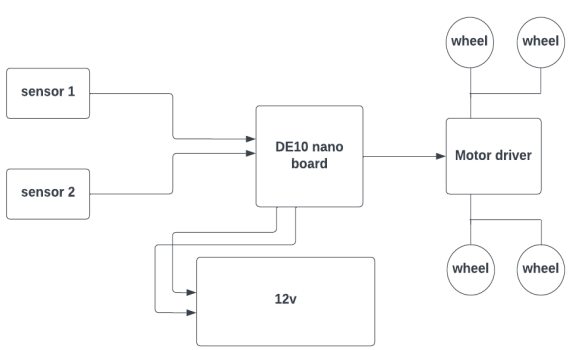

Fig. 3. Line following bot flow chart

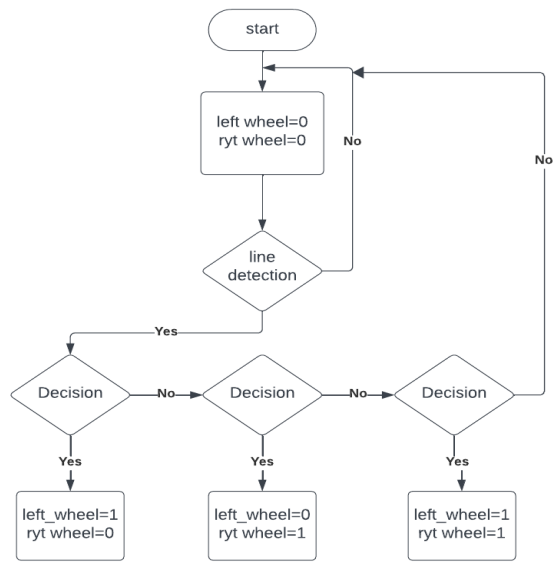

Fig. 4. Block diagram of Line following bot

B. Mobile Controlled Robot

- The mobile app sends control commands to the DE10-Nano via the wireless module.
- The DE10-Nano receives these commands through the FPGA and forwards for interpretation.
- The embedded software on the DE10-Nano processes these commands and triggers the ap- propriate actions in the FPGA logic.
- The FPGA logic controls the connected hardware (e.g., motors, lights) accordingly.Feedback or sensor data from the hardware can be sent back to the mobile app for display or further control.
- Creating a mobile controller using the DE10-Nano involves a combination of FPGA designand mobile app development

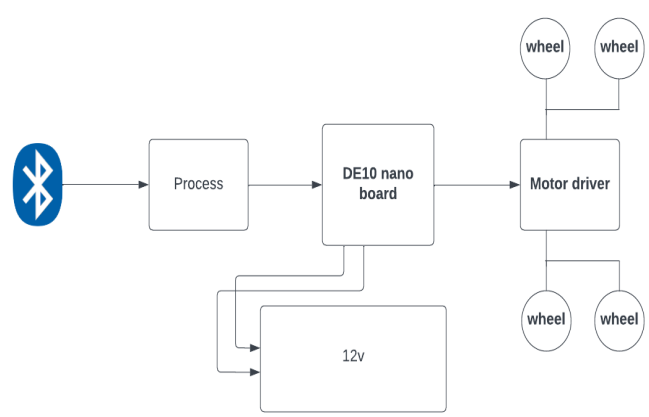

Fig. 5. Flow chart of Mobile controlled bot

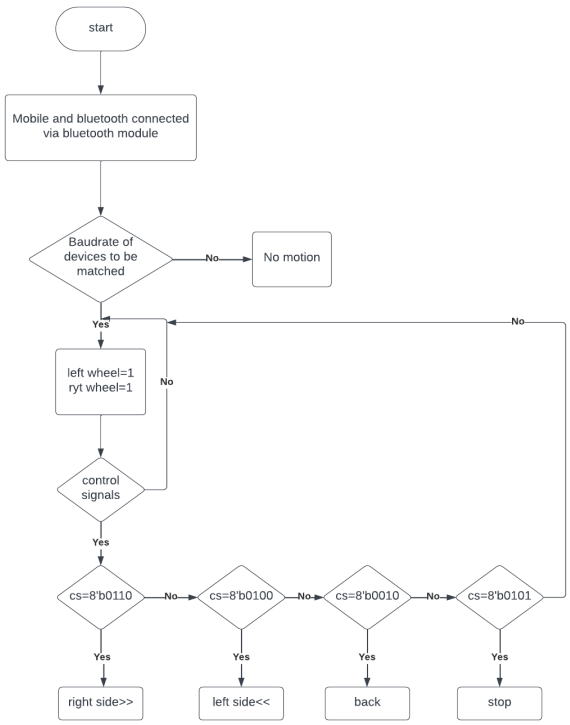

Fig. 6. Block diagram of Mobile controlled bot

V. Baudrate

- The baud rate specifies the number of bits transmitted per second. It is important for both the transmitter and the receiver to agree on the same baud rate for successful communication. The baud rate is typically expressed in bits per second (bps) or Hertz (Hz).
- The formula to calculate the baud rate is:

– Baud Rate= $\frac{Number of Bits per Symbol}{Bit Rate}$

VI. Protocol used: UART

UART, or universal asynchronous receiver-transmitter, is one of the most used device-to-device communication protocols.

A. Why UART only. . . . . ?

- It reaches the standards of required conditions
- Single device communication (accurate data)
- Serial communication and asynchronous ,transfers single byte at a time
- UART –full duplex communication

B. Why not Spi ??

- Serial Peripheral Interface (SPI) is a de facto standard (with many variants)
- wiring complexity(master and slave)
- high data support but not required for the project
- multiple devices : no need (high power consumption)

C. Why not I2C ??

- stands for Inter-Integrated Circuit.
- Distance limitations
- multiple devices are used -no need
- Lower data transfer rate than SPI
- wiring complexity and high-power consumption

It can work with many different types of serial protocols that involve transmitting and receiving serial data. In serial communication, data is transferred bit by bit using a single line or wire. In two-way communication, we use two wires for successful serial data transfer. Depending on the application and system requirements, serial communications needs less circuitry and wires, which reduces the cost of implementation.

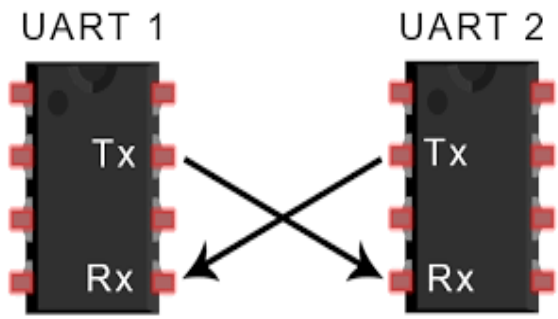

Fig. 7. protocol UART

- Two UARTs communicate directly with each other. The transmitting UART converts parallel data from a controlling device like a CPU into serial form, transmits it in serial to the receiving UART, which then converts the serial data back into parallel data for the receiving device.
- UARTs transmit data asynchronously.
- Instead of a clock signal, the transmitting UART adds start and stop bits to the data packet being transferred.
- These bits define the beginning and end of the data packet, so the receiving UART knows when to start reading the bits.

VII. Results

The project achieved its objectives with both the Line Follower Bot and Mobile-Controlled Bot showcasing reliable and efficient functionality. The integration of sensors, control algorithms, and remote communication successfully demonstrated the capabilities of the Autonomous Bot

VIII. Observations

- The Line Follower Bot demonstrated precise line tracking across various patterns.
- The Mobile-Controlled Bot showcased responsive navigation through the mobile app.
- Both bots exhibited stable performance, highlighting successful sensor integration.

- Real-time communication ensured immediate command execution for the Mobile-Controlled Bot.
- Synergy between sensors and actuators contributed to the overall reliability of the Autonomous Bot.

IX. Future scope

- Device-to-Device Communication: Enhance inter-device communication efficiency for applications, focusing on low-latency protocols and secure data transfer mechanisms.
- FPGA Smart Agriculture Development: Develop FPGA-based solutions tailored for precision agriculture, addressing challenges such as real-time sensor data processing, energy-efficient algorithms, and seamless integration with existing agricultural systems.
- Advanced Safety and Predictive Maintenance: Implement advanced predictive maintenance systems ensuring real-time monitoring for early detection of equipment failures and optimizing overall industrial safety.
- Autonomous Car: Design a comprehensive autonomous car system, addressing challenges like real-time environment perception, decision-making algorithms, and ensuring robust safety measures for reliable autonomous transportation.
- Autonomous Robot Image Processing: Develop sophisticated image processing algorithms for autonomous robots, focusing on tasks such as object recognition, navigation, and decision-making, enabling the robot to adapt to dynamic and complex environments effectively.

References

[1] https://fpgainsights.com/blog/fpga-based-robotics-and-automation/

[2] DE10 Nano User Manual(https://www.terasic.com.twcgi-bin page archive download.pl?Language=EnglishNo=836FID=d9d00bc8292 b529fe2efb4d670e1e3e3):This manual provides details on the DE10 Nano board specifications and features.

[3] https://medium.com/@gupta.jay/line-follower-robot-algorithm-optimizations-for-better-line-following-64297aeed17e

[4] https://www.robotplatform.com/knowledge/communication/wireless communication.html

[5] https://www.elprocus.com/types-of-wireless-communication-applications/

[6] [Terasic DE10-Nano GitHub Repository](https://github.com.terasic.de10-nano): example projects and code snippets on Terasic's GitHub repository.

[7] Y. Liu, D. Chen and S. Zhang, "Obstacle avoidance method based on the movement trend of dynamic obstacles," 2018 3rd International Conference on Control and Robotics Engineering (ICCRE), Nagoya, Japan, 2018, pp. 45-50, doi: 10.1109/ICCRE.2018.8376431.

[8] S. Xie, J. Huang, P. Liu and H. -c. Chang, "Using FPGA-Based Quadratic Residue Code to Improve the Reliable of Wireless Robot Control System," 2020 Chinese Control And Decision Conference (CCDC), Hefei, China, 2020, pp. 4325-4331, doi: 10.1109/CCDC49329.2020.9164779.