Revision History

Rev.	Date	Modified by	Remark
v01	2016.10.26	KL	draft version

MCU
SK-HC32L51-64LQFP-MCU.SchDoc

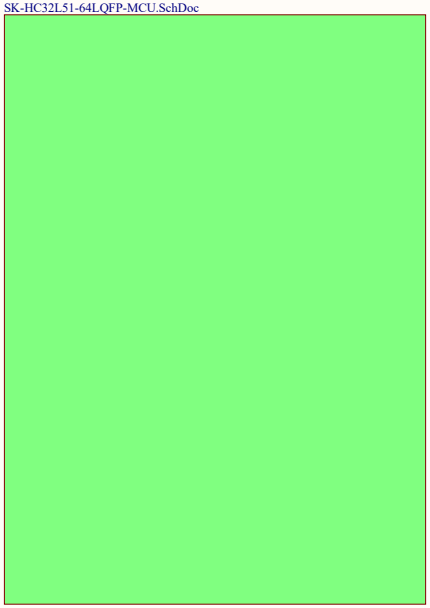

DAP
SK-HC32L51-64LQFP-DAP.SchDoc

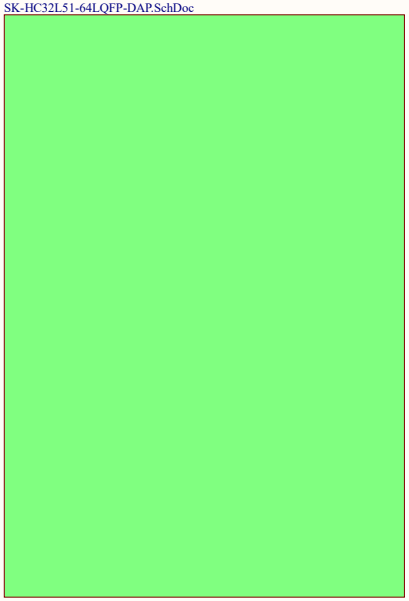

Author KL	HDSC 华大半导体 HUADA SEMICONDUCTOR	
Title SK-HC32L51-64LQFP		
Size A3	Doc Number Cover	Rev. v10
Date 2016-10-26		

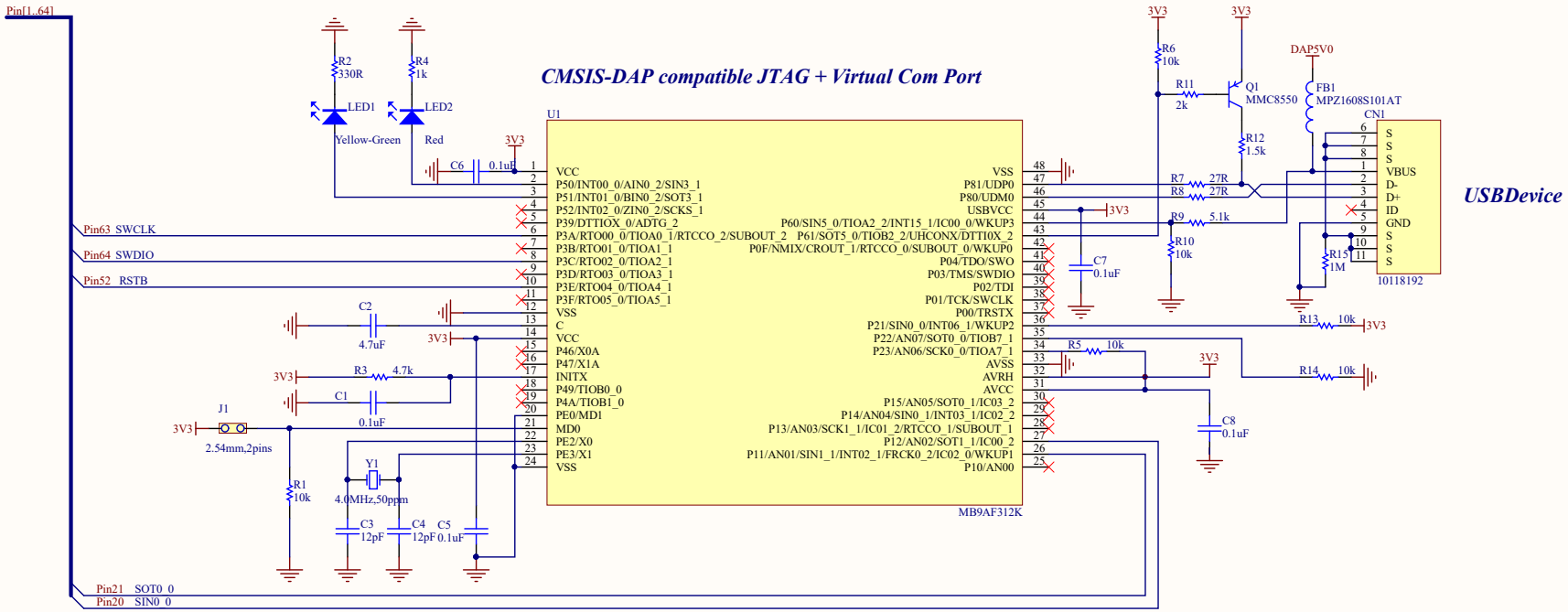

Author		
KL		
Title		
SK-HC32L15-64L-S		
Size	Doc Number	Rev.
A3	*Circuit*	*V11*
Date		
2017-1-4		

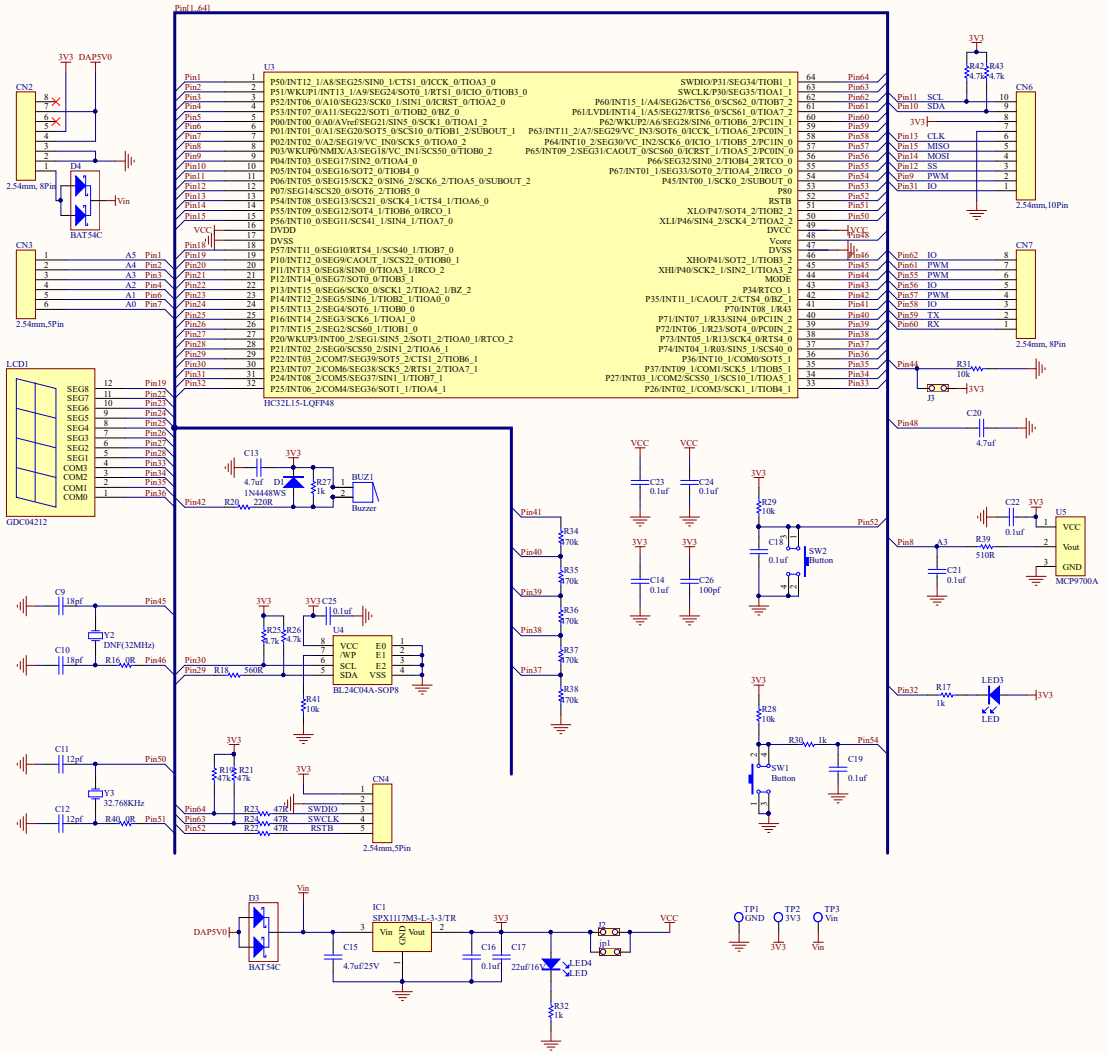

Author		
KL		
Title		
SK-HC32L15-64L-S		
Size	Doc Number	Rev.
A3	*MCU*	*v01*
Date	*2017-1-4*	

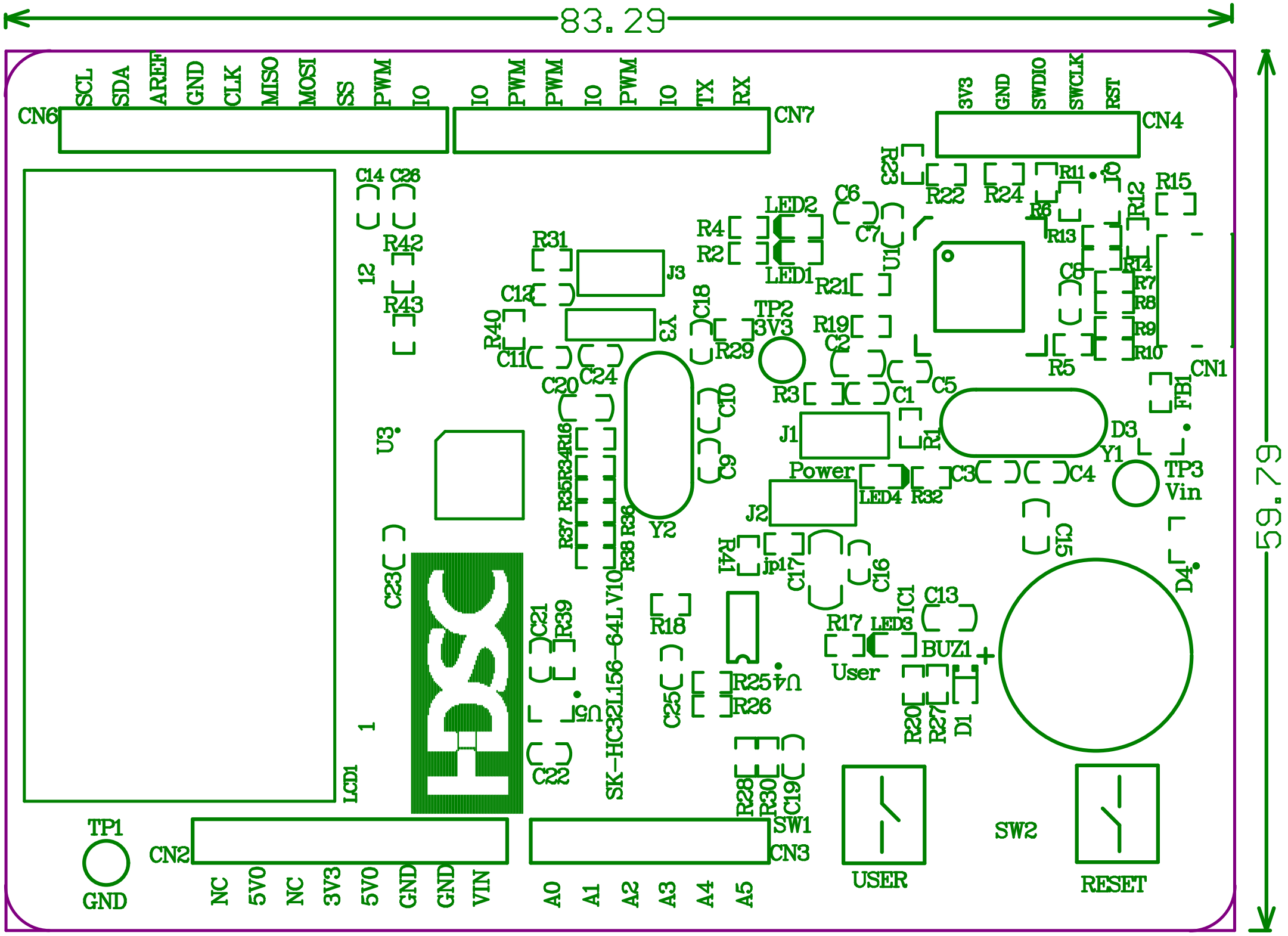
83.29
59.79
CN6
SCL
SDA
AREF
GND
CLK
MISO
MOSI
SS
PWM
IO
IO
PWM
PWM
IO
PWM
IO
TX
RX
CN7
3V3
GND
SWDIO
SWCLK
RST
CN4
C14
C26
R42
R43
12
R31
J3
C12
R40
C11
C20
C24
Y3
C18
R29
TP2
3V3
R4
R2
LED2
LED1
C6
C7
U1
R23
R22
R24
R11
IO
R6
R13
R12
R15
R14
R7
R8
R9
R10
C8
R5
R21
R19
C2
C5
R3
C1
R1
D3
Y1
CN1
FB1
TP3
Vin
U3
R16
R34
R35
R37
R36
R38
Y2
C10
C9
J1
Power
LED4
R32
C3
C4
J2
R41
jp1
C17
C16
C15
D4
C23
C21
R39
SK-HC32L156-64L V10
R18
IC1
C13
R17
LED3
BUZ1
User
U4
R25
R26
C25
U5
R20
R27
D1
1
LCD1
C22
R28
R30
C19
SW1
CN3
TP1
GND
CN2
NC
5V0
NC
3V3
5V0
GND
GND
VIN
A0
A1
A2
A3
A4
A5
USER
SW2
RESET