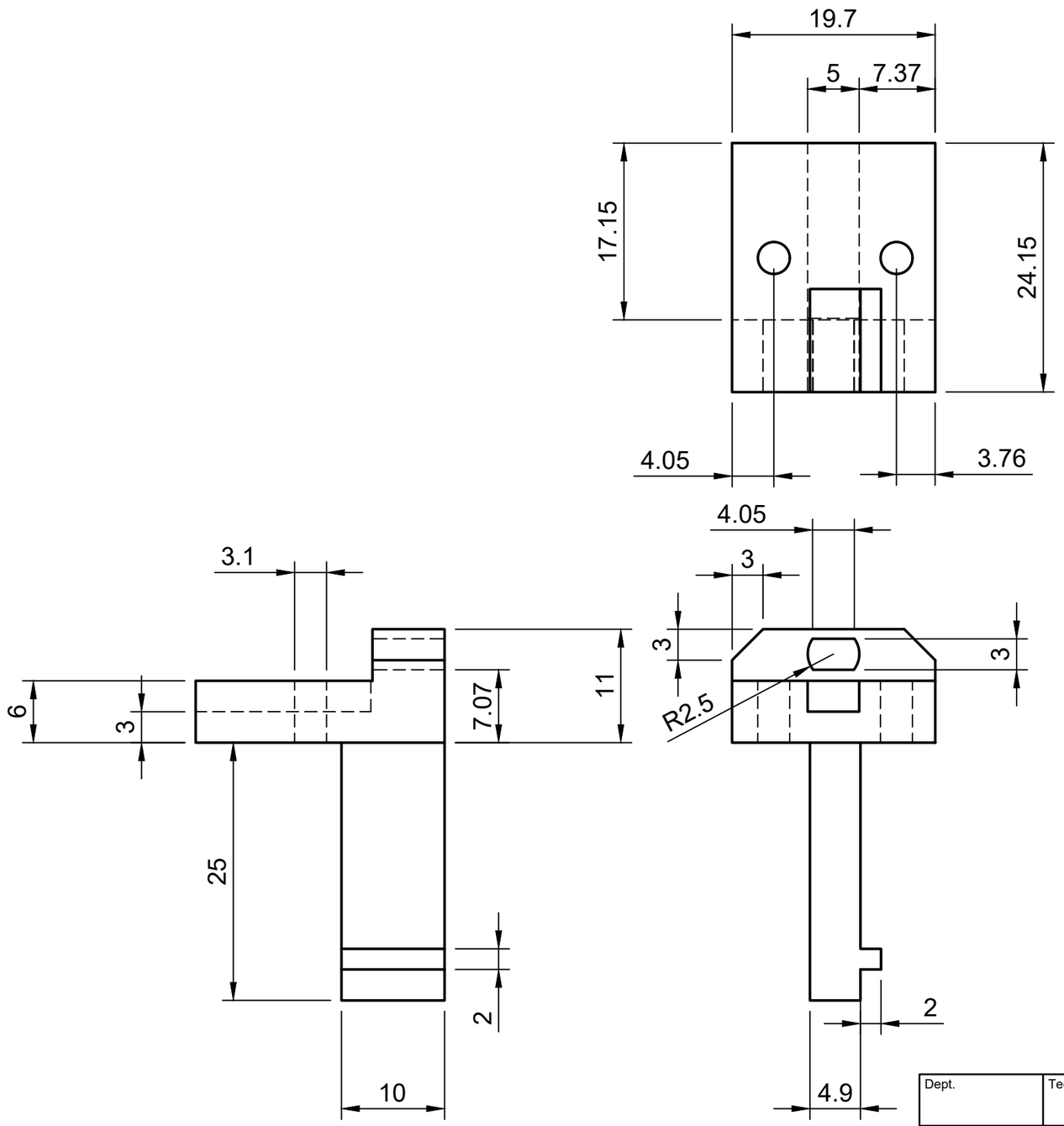

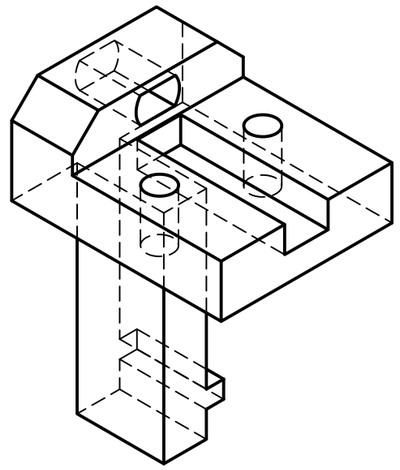

Dept.	Technical reference	Created by	Approved by
		Keegan Kelly 2023-04-05	
		Document type	Document status
		Title photodiode mount	DWG No.
			Rev. / Date of issue / Sheet 1/1

Ø0