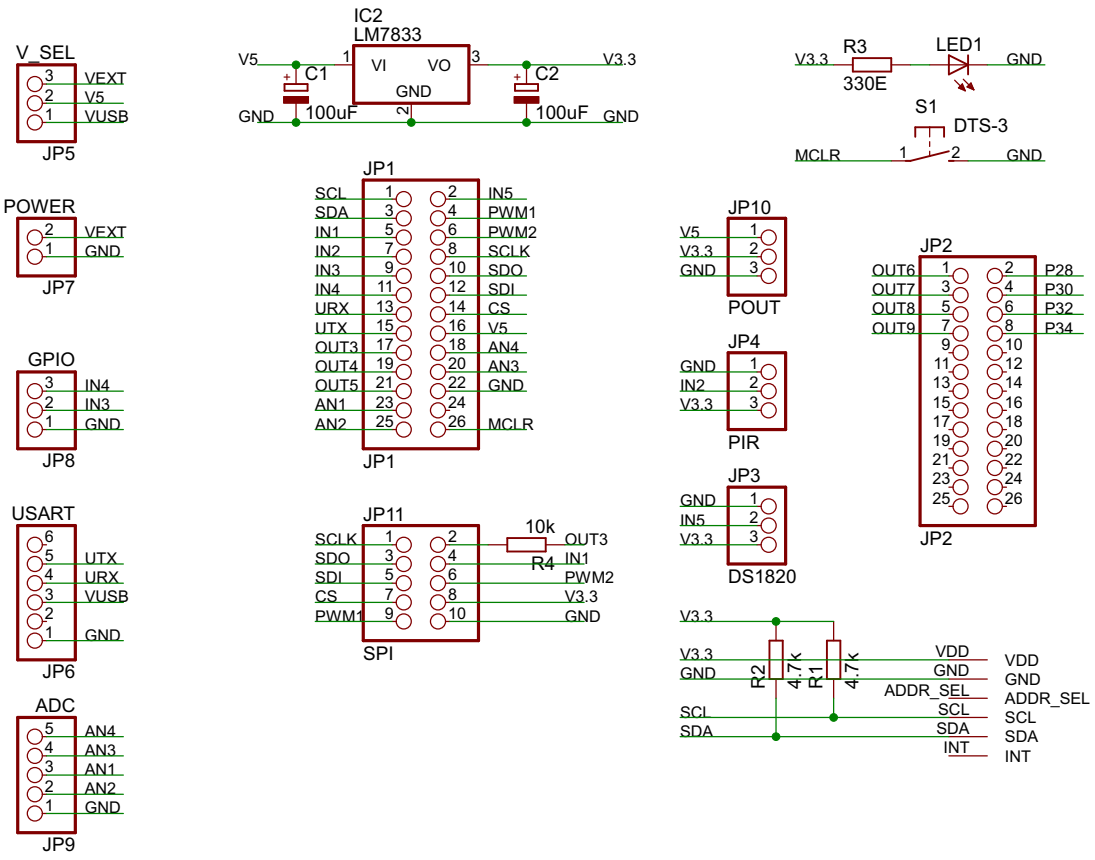

24-07-2013 18:16:34 C:\Users\Omkar\Desktop\IIIT-Delhi\PCB Designs\design_update\mainboard.sch (Sheet: 1/1)