DESIGN REPORT

Assessment Name: I&C Practical Interview Challenge- Pilot Plant (March 2026)

Project Title: **Design of a Raspberry Pi Compute Module 4 (CM4) Industrial Carrier Board and 3-Phase Electrical Panel System**

Author: **Sharon Ngetich**

1. Introduction

This report presents the design and engineering approach for two key industrial challenges:

1. Development of a **custom carrier board for Raspberry Pi Compute Module 4 (CM4)**
2. Design of a **3-phase electrical panel (415V, 32A)** for industrial loads

The objective is to demonstrate practical skills in **hardware design, industrial communication, protection systems, and control integration**, while ensuring compliance with engineering best practices in **EMC, safety, and maintainability**.

2. Challenge 1: CM4 Carrier Board Design

2.1 System Overview

The carrier board is designed to extend the Raspberry Pi CM4 into an industrial controller capable of interfacing with field devices using:

- RS485 (x2)
- UART
- SPI
- I2C
- Ethernet

2.2 System Block Diagram

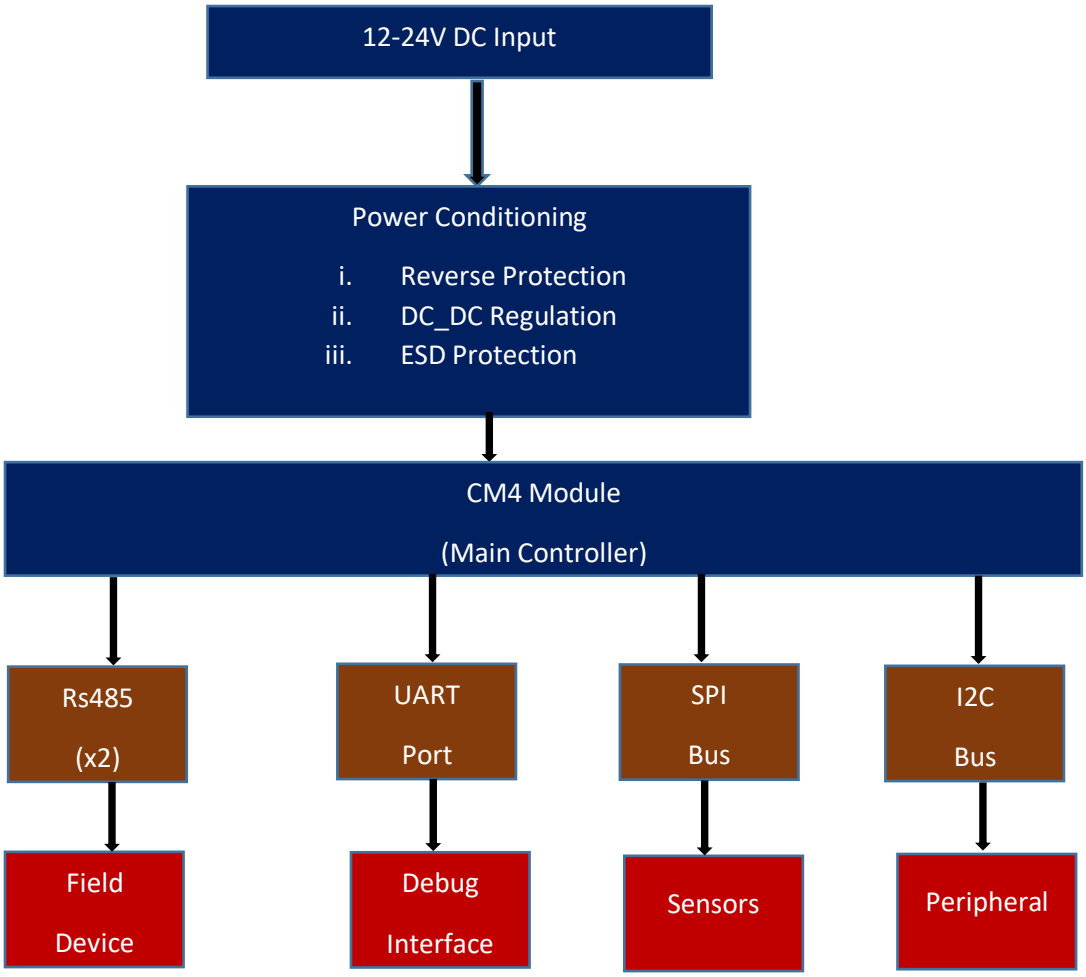

2.3 Hardware Design

2.3.1 Power Supply Design

- Input: **12V–24V DC industrial range**
- Protection:
  - Reverse polarity protection using MOSFET or diode
  - TVS diodes for surge suppression
  - Over-voltage protection
  - High-efficiency step-down regulator (e.g., LM2596 or equivalent)
  - Overcurrent Protection
  - Resettable fuse (PTC) or standard fuse
- Regulation:
  - DC-DC Buck converter for 5V and 3.3V rails

Design Justification:
Ensures stable operation in noisy industrial environments and protects sensitive electronics.

2.3.2 CM4 Interface

- High-density mezzanine connectors used
- Routed signals:
  - Power rails
  - UART, SPI, I2C
  - Ethernet interface

Design Consideration:

- Controlled impedance routing for high-speed signals (USB, Ethernet)
- Proper grounding and decoupling capacitors near power pins
- Solid ground plane for noise reduction

2.3.3 RS485 Communication (2 Channels)

Each channel includes:

- RS485 transceiver (e.g., MAX485)
- Protection:
  - TVS diodes on A/B lines
  - Series resistors
- Optional:
  - Galvanic isolation (recommended for industrial safety)
- Termination:
  - 120Ω resistor selectable via jumper

RS485 Block Diagram

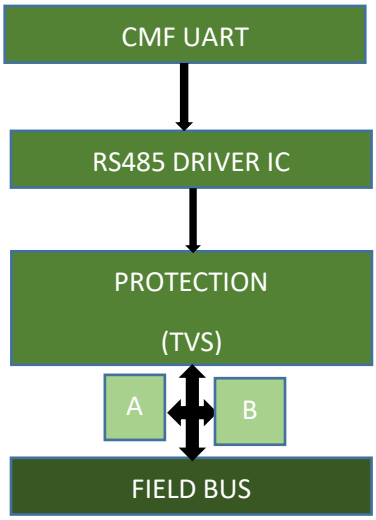

2.3.4 SPI & I2C Interfaces

- SPI0 exposed for high-speed peripherals
- I2C1 includes pull-up resistors (typically 4.7kΩ)

Applications:

- Sensors
- ADC/DAC modules
- Display modules

2.3.5 UART Interface

- Dedicated UART header for:
  - Debugging
  - External communication (e.g., GSM, GPS)

2.3.6 Additional Features

- Status LEDs:
  - Power
  - Activity
- Mounting holes:
  - Mechanical stability
  - Panel integration

2.4 PCB Layout Considerations

2.4.1 Stack-up Design

- 4-layer PCB recommended:
  - Top: Signal
  - Inner 1: Ground plane
  - Inner 2: Power plane
  - Bottom: Signal

2.4.2 Signal Integrity

- Controlled impedance for Ethernet and high-speed lines
- Short trace routing for SPI/I2C
- Differential routing for RS485

2.4.3 Thermal Management

- Copper pours for heat dissipation

- Thermal vias under regulators

2.4.4 Test Points

- Added for:
    - Power rails
    - Communication lines
- Enables easy debugging and validation

2.5 Firmware Test Strategy

- Verify:
    - UART communication loopback
    - RS485 transmission/reception
    - SPI device communication
    - I2C sensor detection

Tools:

- Python scripts or C-based test firmware
- Serial terminal for validation

2.6 Diagnosis & Troubleshooting

Issue	Possible Cause	Solution
No Power	Faulty Regulator	Check Voltage Rails
RS 485 failure	Termination Missing	Enable 120ohm resistor
I2C not working	Missing pull-ups	Add resistors
Noise interference	Poor grounding	Improve layout

3. Challenge 2: Electrical Panel Design

3.1 System Overview

Design of a **415V, 3-phase panel** supplying:

- Vacuum Pump (BSC SRV300B)
- Boiler (24kW)

3.2 Electrical Panel Block Diagram

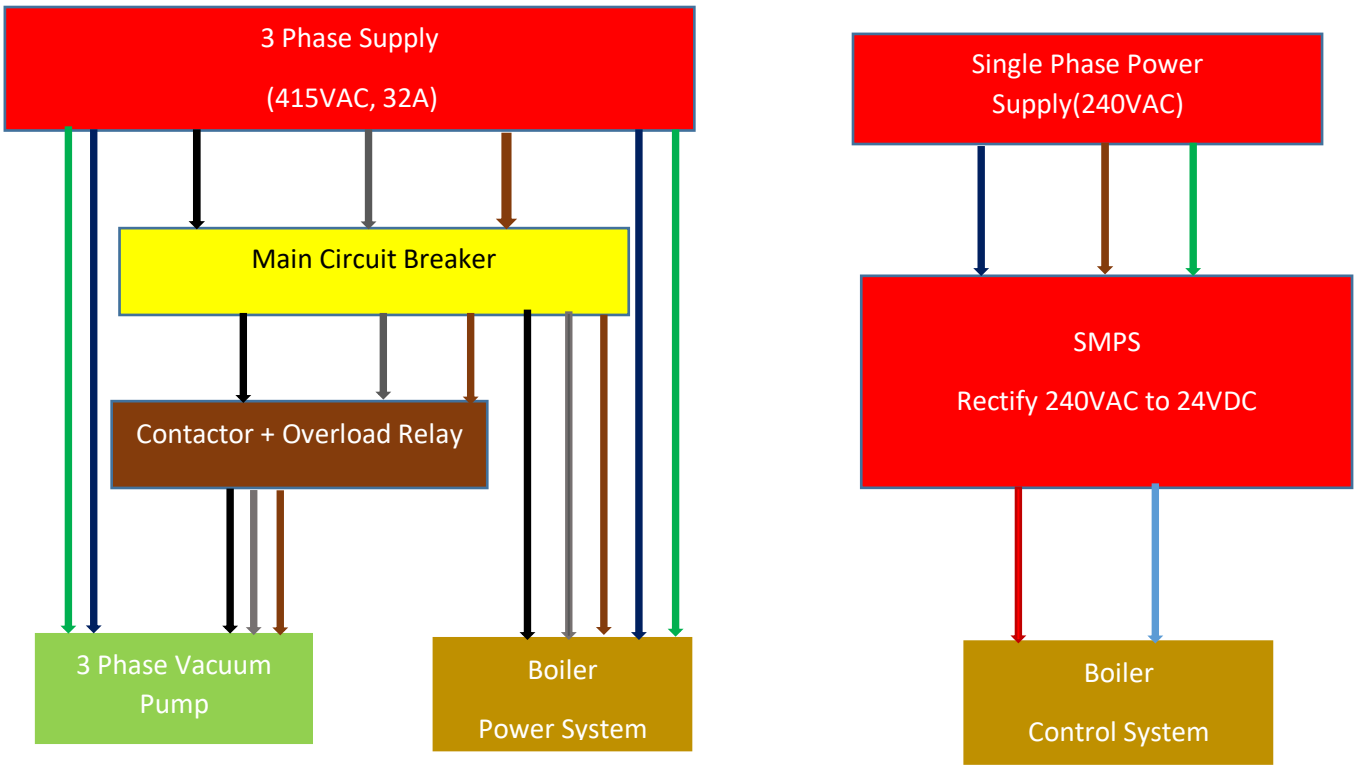

Key:

Item	Color Name	Display
Neutral	Blue	
Earth	Green	
+24DC	Red	
-24DC	Sky_Blue	
Live_1	Black	
Live_2	Grey	
Live_2	Brown	

DOL_Connection (Contactor and Overload Relay)

For Vacuum Pump Protection

A DOL starter applies full voltage to the vacuum pump via a contactor. Pressing START energizes the 24V DC coil (K1), closing main contacts and powering the motor. An auxiliary contact seals the circuit to keep

it running. Pressing STOP or an overload trip opens the control circuit, de-energizing the coil and stopping the motor safely.

DOL Connection Image

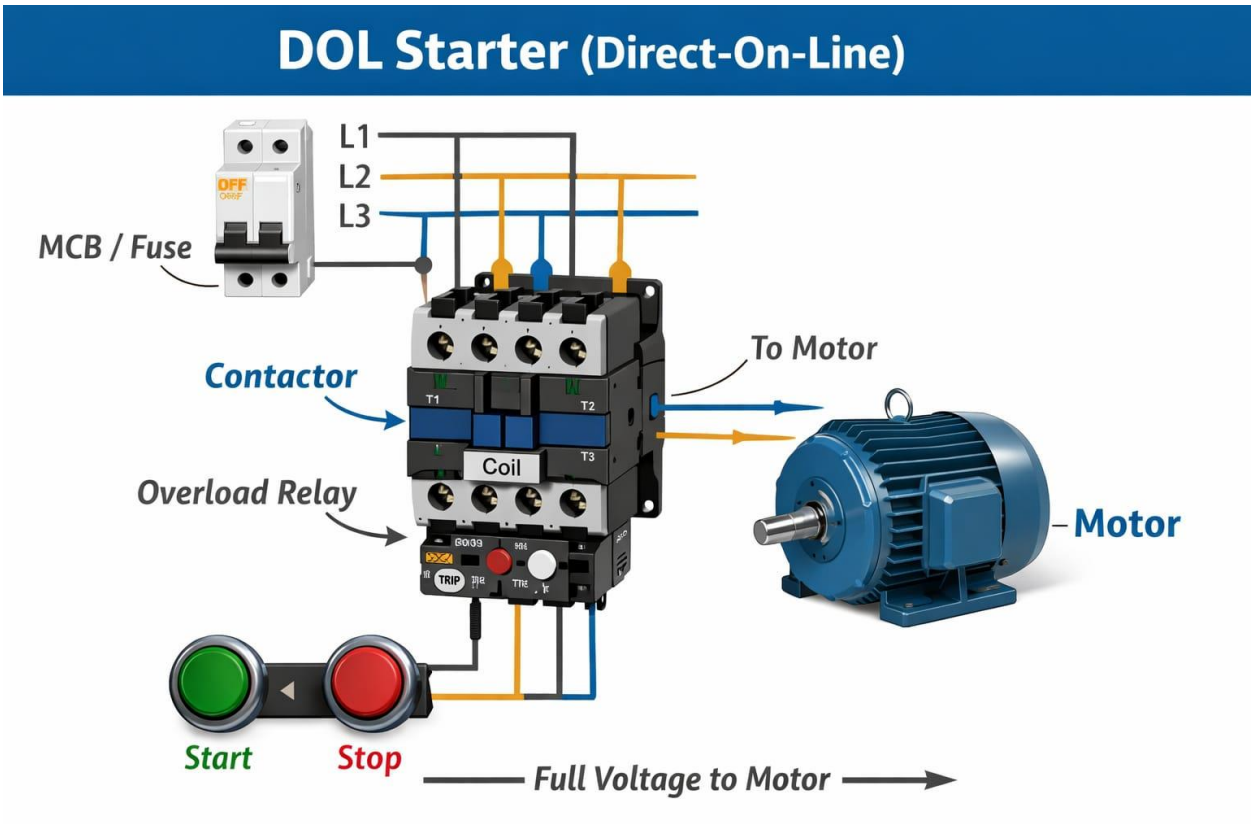

3.3 Component Selection

- **MCCB**: Main protection
- **Contactors**: Load switching
- **Overload Relays**: Motor protection
- **MCBs**: Auxiliary circuits
- **24V Power Supply**: Control circuits

3.4 Panel Layout Design

Key Considerations:

- Separation of:
    - Power section
    - Control section
- DIN rail mounting

- Cable trunking for organization

3.5 Wiring Scheme

- Color coding:
  - Red/Yellow/Blue → Phases
  - Black → Neutral
  - Green → Earth
- Proper labeling:
  - Terminal blocks
  - Devices

3.6 Safety & Standards

- Earthing system
- Short-circuit protection
- Isolation switches
- Compliance with IEC standards

3.7 Maintenance Considerations

- Clear labeling
- Accessible components
- Modular design

4. Conclusion

The proposed designs demonstrate a practical and scalable approach to:

- Industrial embedded system development using CM4
- Reliable industrial communication (RS485, SPI, I2C)
- Safe and standards-compliant electrical panel design

The solutions emphasize **robustness, safety, scalability, and ease of maintenance**, aligning with real-world industrial requirements.