VISIONASTRAA EV ACADEMY

DATA SCIENCE INTERNSHIP

NLP on Mechanic Repair Logs

Submitted by

SHASHANK C	**1MS22ET045**
KAVAN P GOWDA	**1MS23ET403**
DARSHAN K M	**1MV23EE412**

VISVESVARAYA TECHNOLOGICAL UNIVERSITY
JNANASANGAMA, BELAGAVI-590018
2025-26

TABLE OF CONTENTS

CHAPTERS	PAGE NO
1. **Introduction**	**1**
1.1. **Problem statement**	**1**
1.2. **Objective**	**1**
1.3. **Scope of the project**	**2**
1.4. **Motivation**	**2**
2. **Literature survey**	**3-4**
3. **Design and development of EV Mechanic Ai agent**	**5**
3.1. **System design overview**	**5**
3.2. **Natural language processing and data handling**	**6**
3.3. **BERT-based semantic understanding**	**7- 8**
3.4. **BERT-Based semantic understanding**	**8-9**
3.5. **BERT model working**	**9-10**
3.6. **Clustering-Based issue identification**	**10-11**
3.7. **Confidence Score and severity analysiss**	**11**
3.8. **Rule-Based suggestion Generation**	**11-12**
3.9. **Interaction fellow-up questioning**	**12**
3.10. **Software development and implementation**	**12-13**
3.11. **Working of the EV mechanic Ai agent**	**13-14**
3.12. **Summary**	**14**
4. **Results and analysis**	**15-16**
5. **Conclusion**	**17**
6. **References**	**18**

ABSTRACT

The rapid expansion of the electric vehicle (EV) industry has created a growing need for smarter and more data-driven approaches to vehicle monitoring, diagnostics, and maintenance. Unlike traditional vehicles, EVs depend heavily on electronic components, battery systems, and software-based controls. As a result, they generate a large amount of operational and maintenance data, which, if properly analyzed, can significantly improve performance, reliability, and service efficiency.

Vision Astra EV Academy, a Bengaluru-based institute established in 2023, focuses on preparing students for real-world challenges in electric mobility. The academy emphasizes practical learning through hands-on training in key areas such as EV powertrains, battery management systems, electric motors, and power electronics. By offering project-based internships and collaborating with industry, it helps students gain practical exposure and problem-solving skills.

As part of this internship, the project explores the use of Data Science and Natural Language Processing (NLP) in the EV domain. The project, titled *"NLP on Mechanic Repair Logs,"* focuses on analysing maintenance records written by mechanics during vehicle servicing. These logs contain useful information about faults, symptoms, and repair actions, but since they are written in free-text format, they are often unstructured and difficult to analyse manually.

To address this challenge, the proposed system applies NLP techniques to process and interpret these repair logs. The goal is to convert unstructured text into meaningful and structured information, making it easier to identify common issues, repeated faults, and suitable repair actions. This helps in recognizing patterns and improving the overall accuracy of vehicle diagnostics.

In addition, the system supports predictive maintenance by providing insights that can help anticipate potential issues before they become serious. This not only assists mechanics in making faster and better decisions but also contributes to improving the efficiency of EV maintenance systems.

Keywords: Electric Vehicles (EV), Natural Language Processing (NLP), Data Analysis, Predictive Maintenance, Repair Logs, Fault Detection, Battery Management System (BMS), Unstructured Data, Vehicle Diagnostics, Smart EV Systems

CHAPTER-1

INTRODUCTION

1.1 PROBLEM STATEMENT

Electric vehicles generate a large amount of maintenance data, especially in the form of mechanic repair logs, which contain important details about faults, symptoms, and repair actions. However, this data is usually written in plain text and is unstructured, making it difficult to analyze and use effectively. Many mechanics depend on manually checking past repair records, which is time-consuming and may not always provide accurate insights. It becomes hard to identify common issues, patterns, or repeated faults from large volumes of text data. Due to this, diagnosing problems in electric vehicles can be slow and inefficient. In most cases, there is no smart system available that can automatically process these repair logs and provide useful information such as common faults or possible solutions. This lack of intelligent analysis can lead to repeated mistakes, increased service time, and reduced efficiency. Therefore, there is a need for a system that can analyze unstructured repair data using advanced techniques like Natural Language Processing. Such a system can convert text data into meaningful insights, helping in faster and more accurate diagnosis. This will reduce manual effort, improve maintenance efficiency, and enhance the overall reliability of electric vehicles.

1.2 OBJECTIVE:

The main objective of this project is to develop an intelligent system that can analyze mechanic repair logs using Natural Language Processing (NLP) techniques. The project aims to convert unstructured text data into structured and meaningful information for better understanding. It focuses on identifying common faults, symptoms, and repair patterns from maintenance records. Another objective is to assist mechanics and users in faster and more accurate diagnosis of electric vehicle issues. The system is designed to reduce manual effort involved in analyzing large amounts of repair data. It also aims to improve maintenance efficiency by providing useful insights from past records. The project focuses on applying data science techniques in the electric vehicle domain to enhance reliability and performance. Additionally, it helps in recognizing recurring problems and possible solutions based on historical data. The system is intended to support better decision-making in servicing and troubleshooting. Overall, the objective is to create a smart, simple, and effective solution that improves EV maintenance using data-driven approaches.

1.3 SCOPE OF THE PROJECT:

This project focuses on analyzing mechanic repair logs in the electric vehicle domain using Natural Language Processing (NLP) and data science techniques. It is designed to work with unstructured textual data generated during vehicle servicing and convert it into meaningful and structured information. The system can be used to identify common faults, symptoms, and repair patterns from past maintenance records. It is applicable in-service centers, workshops, and EV maintenance platforms to support faster and more efficient diagnosis. The project mainly deals with text-based data analysis and does not involve direct hardware integration with the vehicle. It can be further extended by integrating real-time data from EV sensors and battery management systems. The system can also be improved by using advanced machine learning models for better prediction accuracy. Additionally, it can be scaled to support different types of vehicles and larger datasets. The project provides a foundation for developing intelligent diagnostic systems in the EV industry. Overall, it aims to enhance maintenance efficiency, reduce manual effort, and support data-driven decision-making in electric vehicle servicing.

1.4 MOTIVATION:

Electric vehicles are becoming more popular, but maintaining them efficiently is still a challenge due to the complexity of their systems and the large amount of data generated during servicing. Mechanic repair logs contain valuable information, but since they are written in unstructured text format, it is difficult to analyze them and extract useful insights. This creates a need for a smarter way to handle and understand such data. The motivation behind this project is to use data science and Natural Language Processing (NLP) to make sense of these repair logs and improve the overall maintenance process. By developing a system that can automatically analyze text data, it becomes easier to identify common faults and patterns. This helps in faster diagnosis and reduces the effort required by mechanics. The project also aims to bring modern AI techniques into the EV domain, making maintenance more efficient and intelligent. Additionally, it supports better decision-making and reduces repeated errors in servicing. Overall, the motivation is to create a practical and useful solution that enhances EV maintenance using technology.

CHAPTER-2

LITERATURE SURVEY

2.1 BERT for Natural Language Processing in Bahasa Indonesia

Author: Danny Sebastian, Hindriyanto Dwi Purnomo, Sembiring-Year;2020

This paper discusses the application of the BERT model for Natural Language Processing in the Indonesian language. It explains how transformer-based models improve performance in tasks like text classification and language understanding. The study highlights the effectiveness of BERT in handling multilingual data. This is relevant to our project as we use BERT-based NLP techniques to process and analyze mechanic repair logs.

2.2 Ensemble BERT: A Student Social Network Text Sentiment Classification Model Based on Ensemble Learning and BERT Architecture

Author: Kai Jiang, Honghao Yang, Yuexiang Wang, Qianru Chen, Yiming Luo – Year: 2024

This paper presents an ensemble learning approach combined with BERT for sentiment classification. It explains how combining multiple models improves accuracy and robustness in text analysis. The approach enhances performance compared to single models. This is useful for our project as similar techniques can improve the accuracy of analyzing and classifying repair logs.

2.1 Exploring Bio Clinical BERT's NLP Capabilities with Explainability Techniques

Author: Aditi Sankaranarayanan, Diya Shetty, Kirti Chetwani – Year: 2023

This paper focuses on Bio Clinical BERT and its application in analyzing domain-specific text data. It also introduces explainability techniques to understand model predictions. The study highlights the importance of transparency in NLP models. This is relevant to our project as we aim to analyze repair logs effectively while understanding the reasoning behind prediction.

2.4 Improving Noise Robustness for Spoken Content Retrieval Using Semi-supervised ASR and N-best Transcripts for BERT-Based Ranking Model

Author: Yasufumi Moriya, Gareth J. F. Jones – Year: 2023

This paper discusses improving the performance of BERT-based models in noisy environments using speech recognition data. It highlights techniques to handle errors and improve retrieval accuracy. This is useful for our project as repair logs may contain noisy or unstructured text, and similar techniques can improve processing accuracy.

2.5 Impact of Transformer-Based Models in NLP: An In-Depth Study on BERT and GPT

Author: Mustafa Saler, Ercan ÖLÇER – Year: 2024

This paper provides a detailed study of transformer-based models such as BERT and GPT. It explains their architecture, advantages, and performance improvements in NLP tasks. The study highlights how these models capture contextual meaning effectively. This is relevant to our project as transformer models enhance the accuracy of analyzing repair logs.

2.6Triple-Compressed BERT for Efficient Implementation on NLP Tasks

Author: Zhipeng Peng, Yuning Zhu – Year: 2023

This paper introduces a compressed version of BERT to improve efficiency and reduce computational cost. It explains techniques like model compression while maintaining performance. This is useful for our project as it helps in implementing efficient NLP models for large-scale repair log analysis.

CHAPTER-3

DESIGN AND DEVELOPMENT OF EV MECHANIC AI AGENT

3.1 Introduction to the System Design

The EV Mechanic AI Agent is developed as an intelligent fault analysis and assistance system for electric vehicles. The main purpose of this project is to help identify vehicle-related problems from text-based inputs such as mechanic repair logs, service notes, or user-described symptoms. In practical situations, many EV issues are first reported in words rather than through sensors or numerical data. For example, a user may describe a problem as “battery overheating while charging,” “vehicle not starting suddenly,” or “motor making unusual noise.” These descriptions contain useful diagnostic information, but they are unstructured and written in different styles. This makes them difficult to process using traditional rule-based systems.

The design of this project focuses on converting such unstructured input into a meaningful diagnostic output using Natural Language Processing and machine learning. Instead of depending only on exact keyword matching, the system is developed to understand the meaning and context of the sentence. This makes the solution more practical because, in real life, two different users may describe the same fault in very different ways. The EV Mechanic AI Agent is therefore designed to behave like an intelligent assistant that can read the complaint, interpret the probable issue, estimate how serious it is, and provide the next possible action.

From a system design point of view, the project is organized into multiple connected stages. First, the text input is accepted from the user. Then, the text is preprocessed to remove unnecessary noise and standardize the data. After this, a BERT-based language model is used to convert the text into semantic embeddings that represent its meaning. These embeddings are then analyzed using clustering methods to identify the most relevant EV issue category. Based on the closeness of the match, the system calculates a confidence score and assigns a severity level. Finally, the system provides diagnostic suggestions and, when needed, asks follow-up questions to improve the diagnosis.

This complete design makes the project not only technically meaningful but also highly relevant to future EV service systems. It shows how AI can support maintenance by reducing ambiguity in fault descriptions and helping mechanics or users understand the likely cause of a problem.

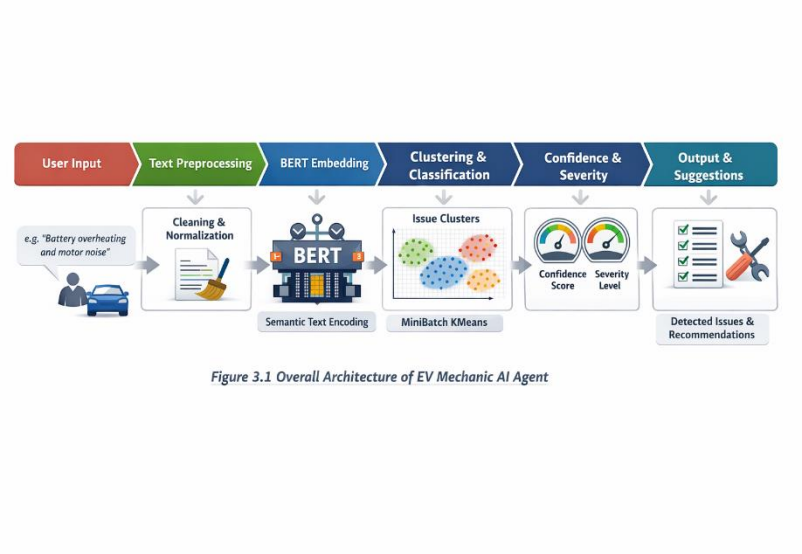

Fig 3.1: Overview Architecture of EV Mechanic AI Agent

3.2 SYSTEM DESIGN OVERVIEW

The EV Mechanic AI Agent is developed as an intelligent diagnostic system that assists in identifying faults in electric vehicles using textual inputs. The main idea behind this system is to bridge the gap between human language and machine understanding. In real-world situations, users or mechanics describe vehicle issues in their own words, which may not follow any standard format. This creates a challenge for traditional systems that depend on structured inputs.

To solve this problem, the system is designed to understand natural language inputs and convert them into structured diagnostic outputs. The architecture of the system is divided into three major layers: input understanding, processing and analysis, and decision generation.

In the first layer, the user provides a problem statement such as “vehicle not starting” or “battery overheating during charging.” In the second layer, the system processes this input using Natural Language Processing techniques and converts it into a machine-understandable format. In the final layer, the system identifies the issue, evaluates its severity, and provides suggestions for corrective actions.

This layered design ensures that the system remains modular, scalable, and easy to improve in the future. It also allows the system to handle complex and multiple issues from a single input, making it suitable for real-world EV diagnostics.

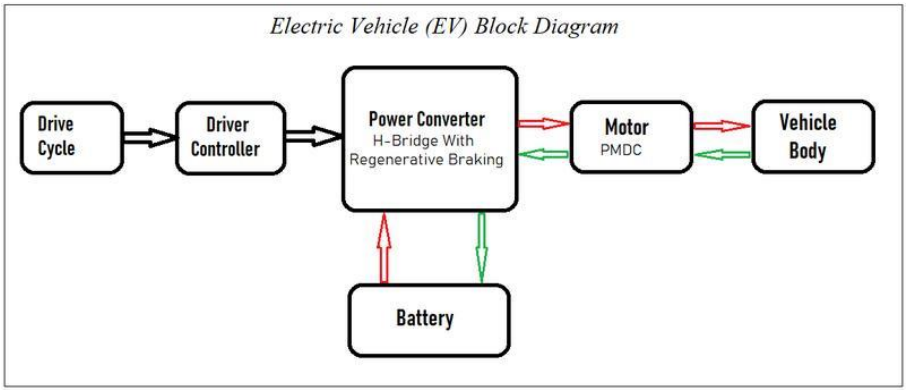

Fig 3.2:Electrical Vehicle Block diagram

3.2 NATURAL LANGUAGE PROCESSING AND DATA HANDLING

Natural Language Processing, or NLP, is the core technology that makes this project possible. Since the system works with text rather than direct sensor signals, it must be able to understand language in a meaningful way. In EV maintenance scenarios, problem descriptions are rarely written in a standard or perfectly structured form. Different mechanics may use different words for the same issue, and users may describe symptoms rather than actual faults. Because of this, the project requires a strong NLP foundation.

The main role of NLP in this project is to transform raw human language into a structured representation that the system can analyze. For example, a user may write “car making noise at high speed,” another may write “motor vibration while running,” and someone else may mention “unusual sound from the vehicle.” Even though the wording is different, the underlying meaning may point to a related mechanical or motor issue. A simple keyword-based model may miss this relationship, but an NLP-based system can capture it.

In this project, NLP is used at multiple stages. First, it helps in cleaning and standardizing the text. Second, it helps in understanding the semantics of the sentence. Third, it supports grouping similar issues together based on meaning rather than exact words. This makes the system more flexible and closer to real-world diagnostic needs.

Another reason NLP is important here is that mechanic logs are often unstructured. A repair log may contain short phrases, abbreviations, symptom descriptions, and mixed technical vocabulary. Traditional classification systems can struggle with such data, especially if the wording changes. NLP helps overcome this by focusing on context and relationships between words. Thus, NLP is not just a supporting component in this project; it is the main intelligence layer that allows the EV Mechanic AI Agent to function effectively. Without NLP, the system would be limited to rigid keyword detection and would not be able to handle realistic service language.

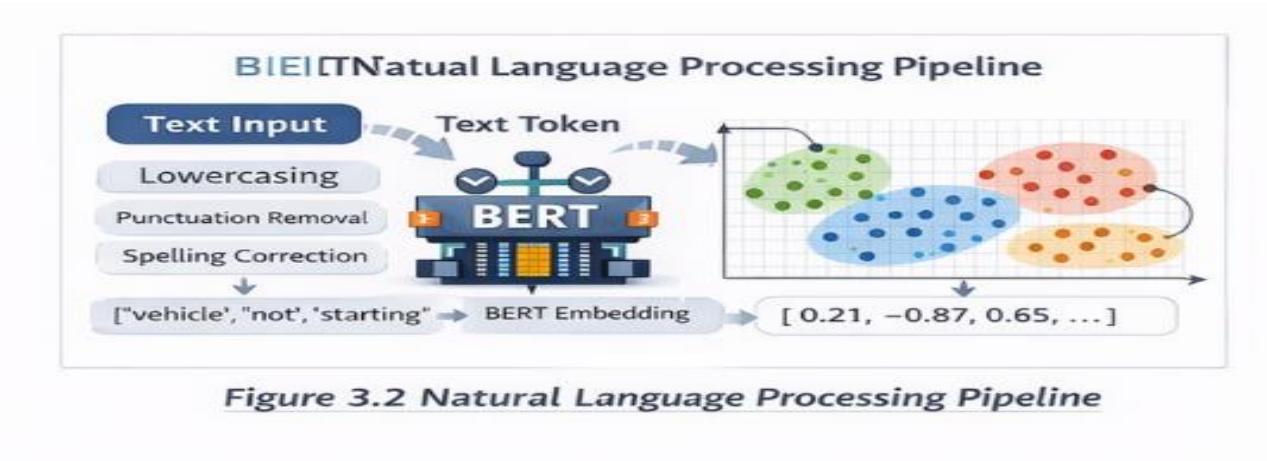

Fig 3.2: Natural Language Processing Pipeline

3.3 BERT-BASED SEMANTIC UNDERSTANDING

Before the input can be given to the model, it must be properly prepared. This stage is called preprocessing. It may look simple, but it is a very important step because the quality of preprocessing directly affects the quality of the final diagnosis.

The text entered by users can contain many irregularities. It may include uppercase and lowercase combinations, unnecessary punctuation, repeated spaces, short forms, and non-standard expressions. If this raw text is directly passed to the model, it may reduce the consistency of the output. Therefore, the system first performs basic cleaning operations.

The preprocessing stage includes converting the entire text to lowercase so that the same word is treated uniformly. For example, “Battery” and “battery” should not be treated as different. It also includes removing unnecessary punctuation marks or symbols that do not carry diagnostic meaning. Extra spaces and formatting inconsistencies are also removed. In some cases, the text may be normalized to simplify repeated patterns and make the input more model-friendly.

The purpose of this preprocessing is not to change the meaning of the complaint, but to make the text cleaner and more consistent for downstream analysis. Once this is done, the prepared text is ready for embedding generation using BERT.

In addition to preprocessing the input text, data preparation is also important for defining the issue categories used in the system. The project works with multiple issue types, such as battery overheating, motor vibration, charging fault, vehicle not starting, and similar EV-related complaints. For each issue category, relevant sample texts or descriptions are considered so that the clustering model can learn meaningful groupings.

This preparation stage forms the foundation for reliable NLP analysis. A well-cleaned input and a properly organized issue structure help the model produce more accurate and useful outputs.

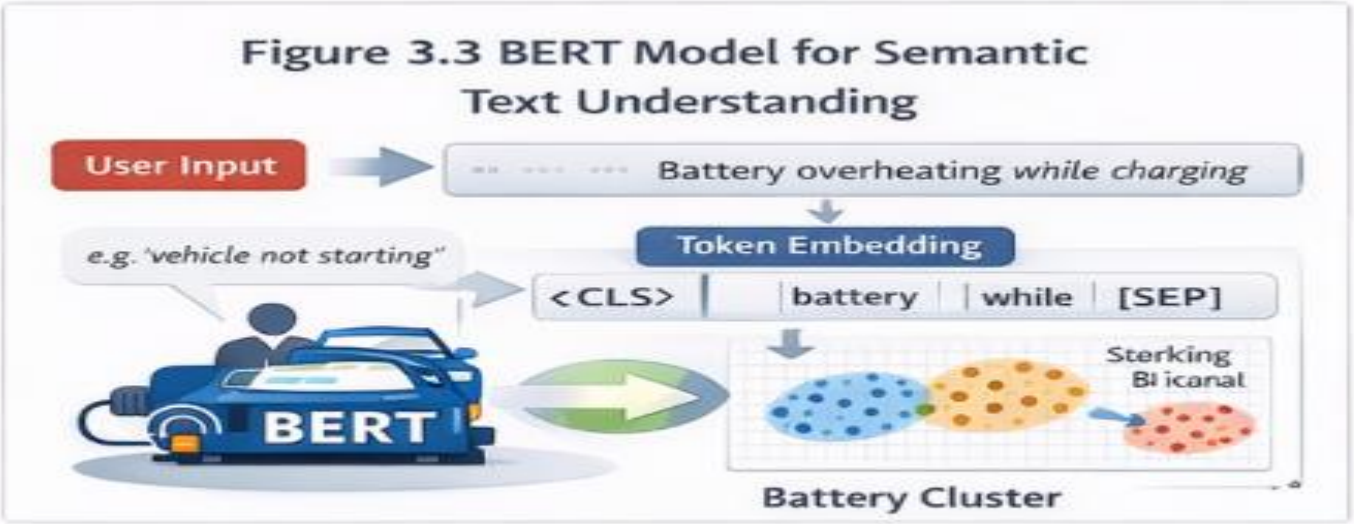

Figure 3.4 Clustering of EV Issue Categories Using K-Means

3.4 BERT-Based Semantic Understanding

One of the most important technical components of the EV Mechanic AI Agent is the use of BERT for semantic understanding. BERT stands for Bidirectional Encoder Representations from Transformers. It is a powerful language model that is designed to understand the meaning of words based on the full context in which they appear.

Traditional text models often process words in a one-directional way, either from left to right or right to left. This means their understanding of a word is limited by partial context. BERT, on the other hand, reads the sentence in both directions. Because of this, it can understand the role of a word more accurately and capture deeper meaning from the sentence as a whole.

In this project, BERT is used through the sentence-transformers library. The input sentence is passed through the model, and the model converts it into a dense numerical vector called an embedding. This embedding can be thought of as a mathematical representation of the sentence's meaning. Two sentences that mean similar things will have embeddings that are close to each other in vector space, even if the wording is different.

This is extremely useful for EV fault diagnosis. A mechanic may write "battery heating during charge," while a user may type "battery gets too hot when charging." A keyword-based system may treat these as different, but BERT-based embeddings capture their semantic similarity. This allows the EV Mechanic AI Agent to understand that both descriptions point to the same fault pattern.

The use of BERT improves the quality of the system in several ways. It makes the model more robust to wording changes. It helps the system handle noisy and natural language input. It reduces the dependence on exact phrase matching. Most importantly, it allows the project to move from basic text search to intelligent meaning-based diagnosis.

This makes the project stronger from both an academic and practical perspective. It shows that the model is not just searching for repeated keywords, but actually interpreting the problem description in a more advanced and human-like way.

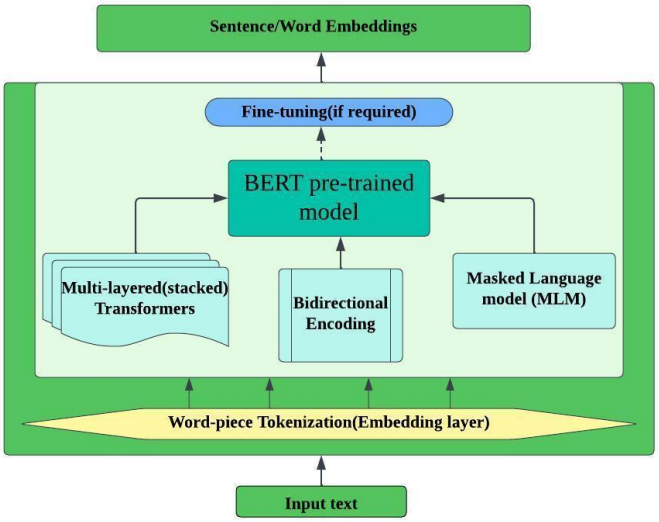

Fig 3.4.1: BERT Model Working

3.6 Clustering-Based Issue Identification

Once the sentence embedding is generated, the next step is to identify the issue category. For this purpose, the project uses MiniBatchKMeans clustering. Clustering is a machine learning technique used to group similar data points together. In this project, each data point is a sentence embedding, and the goal is to group semantically similar complaints into common EV issue categories.

MiniBatchKMeans is chosen because it is efficient and suitable for handling larger sets of embedding data. Compared to the standard KMeans algorithm, MiniBatchKMeans works faster by processing small batches of data at a time. This makes it practical for a project where multiple issue categories are involved and where future expansion is expected.

The role of clustering here is to organize different fault descriptions into meaningful groups. For example, all complaints related to overheating may form one cluster, vibration-related complaints may form another, starting issues may form another, and so on. Once these clusters are formed, a new input can be compared with the cluster centroids to determine which fault type it is closest to.

This approach is useful because real-world EV problems are often described in varied language. Two descriptions may look different in wording but still belong to the same cluster because their embeddings are similar. As a result, clustering helps transform free-text input into structured diagnostic categories.

Another strong feature of the design is its ability to detect multiple issues from a single input. If a complaint includes more than one problem, such as “battery overheating and motor noise,” the system can identify more than one likely issue. This makes the solution more practical, because in actual vehicle service cases, problems

are not always isolated.

By combining semantic embeddings with clustering, the project builds a bridge between language understanding and issue categorization. This is one of the key reasons the EV Mechanic AI Agent is more intelligent than a simple text-matching tool.

3.7 Confidence Score and Severity Analysis

After the issue has been identified, the system evaluates how confident it is in the prediction. This is done using a confidence score. The confidence score is based on how closely the input embedding matches the corresponding issue cluster. A stronger match means the system is more certain that the detected issue is correct.

This part of the project is important because diagnosis should not only say what the problem may be, but also indicate how reliable that prediction is. In real-life service applications, this helps users decide whether the diagnosis is strong enough to act on directly or whether more inspection is needed.

The confidence score is also used to assign a severity level. Severity is a simplified indication of how serious the issue may be. For example, a low-severity issue may indicate that the system has detected a minor or less certain problem. A medium-severity issue may suggest that the problem needs attention soon. A high-severity issue may indicate a strong and critical fault pattern that requires immediate action.

In your project, this confidence-based decision making makes the output much more practical and professional. Instead of simply giving a label, the system adds interpretability. It helps the user understand not just the result, but also the seriousness and certainty of that result.

This improves the quality of the AI agent because it behaves more like an intelligent assistant than a static classifier. It is able to communicate not only the probable issue, but also the level of concern associated with it.

3.8 Rule-Based Suggestion Generation

Issue identification alone is not enough in a maintenance support system. Once the likely problem is detected, the user expects some guidance on what to do next. To provide this, the project includes a rule-based suggestion system.

In this stage, each detected issue is linked to suitable maintenance or inspection recommendations. For example, if the issue is battery overheating, the system may recommend inspecting the cooling system, checking thermal management, or examining charging conditions. If the issue is motor vibration, it may suggest checking alignment, mounting, or internal motor components.

This rule-based layer is important because it adds practical value to the diagnostic output. Machine learning helps identify the issue, but the rule-based logic translates that issue into readable and useful advice. This

combination makes the system more effective for real-world usage.

Another advantage of this design is interpretability. In many AI systems, the result may appear as a label without explanation. In your project, the output becomes easier to trust because it includes a direct recommendation. This makes the system more suitable for mechanics, workshop trainees, and even EV users who may not be experts.

By combining semantic AI with rule-based action mapping, the EV Mechanic AI Agent provides both intelligence and usability. This is an important strength of the project.

3.9 Interactive Follow-Up Questioning

A very interesting and practical feature of the EV Mechanic AI Agent is the follow-up questioning mechanism. This is included to make the system behave more like a real mechanic.

In actual service situations, a mechanic does not give a diagnosis after hearing only one vague sentence. Instead, they ask additional questions to narrow down the problem. For example, if a customer says the vehicle is making noise, the mechanic may ask when the noise occurs, whether it is continuous, whether it happens during charging, acceleration, or braking, and so on.

Your AI agent follows a similar approach. If the system is not sufficiently confident about the diagnosis, or if the complaint could belong to more than one category, it generates a follow-up question. This helps gather more specific details from the user. Once the user responds, the system can refine its analysis and move toward a more accurate diagnosis.

This feature adds a conversational quality to the project. It moves the system beyond one-time classification and makes it more interactive. It also improves diagnostic reliability, especially when the original complaint is too short or ambiguous.

From a project report point of view, this is a very good feature to mention because it shows that the system is not only intelligent in analysis but also thoughtful in interaction design. It reflects how AI can support decision making in a realistic and user-friendly manner.

3.10 Software Development and Implementation

The EV Mechanic AI Agent is implemented using Python, which is one of the most widely used programming languages for machine learning and NLP applications. Python is selected because it provides a rich ecosystem of libraries for text processing, embedding generation, clustering, and data handling.

The major libraries used in the project include pandas and numpy for handling data, scikit-learn for clustering with MiniBatchKMeans, and sentence-transformers for generating BERT-based embeddings. These tools work together to form the core software pipeline of the system.

The development is carried out in a Jupyter Notebook environment. This makes the system easier to build,

test, and modify. The notebook-based approach is especially useful during experimentation because each stage of the pipeline can be executed and verified step by step.

For example, one cell may preprocess the input, another may generate embeddings, another may perform clustering, and another may display the output.

The software flow begins with reading the user input. Then the text is cleaned and converted into embeddings. The embeddings are passed to the clustering model, which predicts the issue category. The confidence score and severity are then calculated. Finally, the system generates suggestions and displays the result in a readable form.

This implementation approach makes the project simple yet effective. It also supports future improvements such as adding a graphical interface, voice input, cloud-based deployment, or integration with real-time EV diagnostic platforms.

3.11 Working of the EV Mechanic AI Agent

The working of the EV Mechanic AI Agent can be explained as a sequence of connected steps. First, the user enters a complaint or repair-related sentence describing the EV problem. This may include one issue or multiple issues in the same input.

The system then preprocesses this input to remove unwanted noise and standardize the text. Once the text is cleaned, it is passed to the BERT-based model, which generates a semantic embedding. This embedding is then compared with the learned clusters that represent different EV issue categories.

Based on the closest match, the system identifies the likely issue or issues. It then computes a confidence score to understand the strength of the prediction. According to this score, a severity level is assigned. After this, the system retrieves the appropriate suggestions for inspection or maintenance.

If the input is too broad or uncertain, the system asks a follow-up question to obtain more details. This helps refine the diagnosis and improve the final output. The final result is then displayed to the user in a structured format, showing the detected issue, confidence, severity, and recommended action.

This workflow demonstrates that the project is not a simple text classifier. It is a complete AI-assisted diagnostic process that includes language understanding, issue grouping, decision analysis, and interaction support.

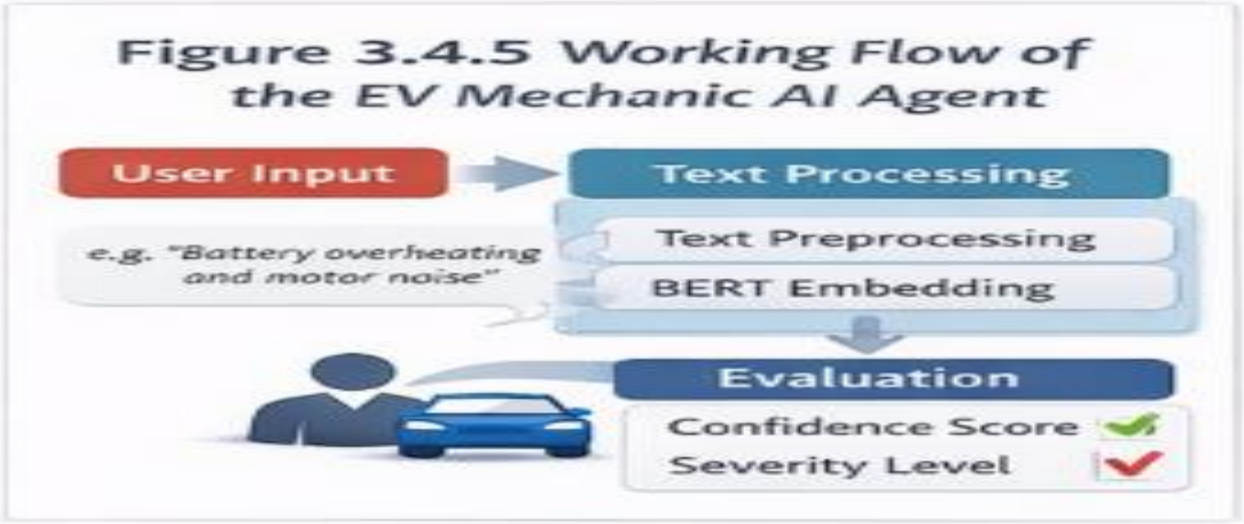

Figure 3.5 Working Flow of the EV Mechanic AI Agent

3.12 SUMMARY

In this chapter, the design and development of the EV Mechanic AI Agent has been presented in detail. The project is developed as an intelligent text-based EV diagnostic assistant that uses Natural Language Processing and machine learning to interpret fault descriptions and provide meaningful outputs.

The system begins by accepting unstructured text input, which is then cleaned and standardized. BERT-based semantic embeddings are used to represent the meaning of the input sentence, and MiniBatchKMeans clustering is used to identify the most relevant EV issue category. The system further improves the result by calculating confidence and severity levels and by generating practical suggestions using rule-based logic. The inclusion of follow-up questioning makes the agent more interactive and realistic.

Overall, the design of the EV Mechanic AI Agent shows how AI can be applied in the EV maintenance domain in a practical and scalable way. It combines advanced NLP techniques with understandable outputs, making it suitable for educational, research, and future real-world applications.

CHAPTER-4

RESULTS AND ANALYSIS

The EV Mechanic AI Agent was tested using different real-world electric vehicle problem statements to evaluate its performance. The system takes unstructured text input from the user and generates a structured output that includes detected issues, confidence score, severity level, and suggested actions. The results obtained from the system show that it is capable of understanding natural language inputs and providing meaningful diagnostic information.

```
•••  🚗 Industrial EV Mechanic AI (type 'exit' to stop)

     You: battery overheating while fast charging

     🤖 AI Response:
     🔍 Issues Detected: ['battery charging cable', 'overheating after long', 'charging not issue']
     ⚠️ Confidence: 0.77
     📊 Severity: MEDIUM

     🛠️ Suggested Actions:
     - Inspect issues related to: battery charging cable. Perform detailed diagnostics and maintenance.
     - Inspect issues related to: overheating after long. Perform detailed diagnostics and maintenance.
     - Inspect issues related to: charging not issue. Perform detailed diagnostics and maintenance.

     ==================================================
     You: battery draining fast and charging is slow

     🤖 AI Response:
     🔍 Issues Detected: ['charging not issue', 'drains quickly overnight', 'battery charging cable']
     ⚠️ Confidence: 0.71
     📊 Severity: LOW

     🛠️ Suggested Actions:
     - Inspect issues related to: charging not issue. Perform detailed diagnostics and maintenance.
     - Inspect issues related to: drains quickly overnight. Perform detailed diagnostics and maintenance.
     - Inspect issues related to: battery charging cable. Perform detailed diagnostics and maintenance.

     ==================================================
```

Fig 4.1 Output of EV Mechanic AI Agent

For the first test case, the input given was “battery overheating while fast charging.” The system analyzed the input and detected multiple related issues such as battery charging cable, overheating after long, and charging not issue. The confidence score obtained was 0.77, which indicates a good level of similarity between the input and the learned issue patterns. Based on this, the system classified the severity as MEDIUM, indicating that the issue requires attention. The suggested actions included inspecting the battery charging cable and checking overheating conditions. These suggestions are relevant and help in identifying the possible cause of the problem.

For the second test case, the input given was “battery draining fast and charging is slow.” The system detected issues such as charging not issue, drains quickly overnight, and battery charging cable. The confidence score obtained was 0.71, which indicates moderate similarity. Based on this, the severity was classified as LOW, suggesting that the issue is not immediately critical but still requires checking.

The suggested actions included inspecting charging performance and diagnosing battery discharge behavior. The system was able to analyze both charging and discharging-related problems from a single input.

From these results, it can be observed that the system is capable of handling unstructured and noisy text inputs effectively. It can detect multiple issues from a single input, which is important in real-world EV diagnostics where problems are often interconnected. The confidence score provides an indication of how reliable the prediction is, and the severity level helps users understand the importance of the issue. The suggested actions further improve the usefulness of the system by guiding the user towards possible solutions.

Overall, the EV Mechanic AI Agent performs well in analyzing textual EV problem descriptions and generating meaningful outputs. The results demonstrate that the combination of Natural Language Processing, BERT-based embeddings, and clustering techniques is effective for EV fault diagnosis. The system provides a simple, fast, and practical approach for identifying issues and assisting users or mechanics in understanding vehicle problems..

CHAPTER- 5

CONCLUSION

The EV Mechanic AI Agent developed in this project provides a simple and effective solution for analyzing electric vehicle issues using textual input. The system is designed to understand unstructured problem descriptions given by users and convert them into meaningful diagnostic outputs. By using Natural Language Processing and BERT-based semantic understanding, the system is able to interpret the actual meaning of the input rather than depending only on keywords.

The results obtained from the system show that it can successfully detect multiple issues from a single input, calculate confidence scores, assign severity levels, and provide relevant suggestions. This makes the system useful for basic EV fault diagnosis and helps users or mechanics understand possible problems in a clear and structured way. The inclusion of confidence and severity also improves the reliability of the output and helps in decision making.

The use of clustering techniques allows the system to group similar issues and identify patterns effectively. In addition, the rule-based suggestion system provides practical recommendations that can assist in troubleshooting. The overall design of the system is simple, fast, and suitable for real-time applications.

Although the system performs well, it can be further improved by increasing the dataset, adding more issue categories, and integrating real-time sensor data. Future enhancements may also include a graphical user interface, voice input, and integration with actual EV diagnostic systems.

Overall, this project demonstrates that combining NLP, machine learning, and simple logic can create an intelligent and practical EV diagnostic assistant. The EV Mechanic AI Agent has strong potential for future development and can be extended into a complete AI-based maintenance support system for electric vehicles.

REFERENCES:

1. J. Devlin, M. W. Chang, K. Lee, K. Toutanova, "BERT: Pre-training of Deep Bidirectional Transformers for Language Understanding," Proc. NAACL, 2019.
2. D. S. Sabarisan, H. D. Purnomo, I. Sembiring, "BERT for Natural Language Processing in Bahasa Indonesia," Proc. IEEE ICICTA, 2022.
3. K. Jiang et al., "Ensemble BERT: A Student Social Network Text Sentiment Classification Model," Proc. IEEE ICSECE, 2024.
4. A. Sankaranarayanan et al., "Exploring BioClinical BERT's NLP Capabilities with Explainability Techniques," Proc. IEEE, 2023.
5. E. Demir, M. Bilgin, "Sentiment Analysis from Turkish News Texts with BERT-Based Models," Proc. IEEE, 2023.
6. Z. Peng, Y. Zhu, "Triple-Compressed BERT for Efficient NLP Tasks," Proc. IEEE EIECS, 2023.

Websites

1. Source: **https://components101.com**

   This website helped us understand the working of the ACS712 current sensor, 7812 voltage regulator, and other electronic components like MOSFETs and optocouplers used in our circuit.

2. Source: **https://www.raspberrypi.com**

   This is the official Raspberry Pi website. We used it to understand how to use Raspberry Pi, how to install Python, and how to run code that compares battery data.

3. Source: **https://batteryuniversity.com**

   We referred to this site to understand battery charging basics, charging methods, and how charging current (like 0.25C) affects battery life and safety.