SHAUNAK MUKHERJEE HW8

1.

(a) Determine b such that following is valid pdf

$$f_{XY}(x,y) = \begin{cases} 3xy & 0 \leq x \leq 1 \,;\, 0 \leq y \leq b \\ 0 & \text{elsewhere.} \end{cases}$$

f_{XY} is a valid pdf if two conditions are satisfied

1. Non negativity $f_{XY}(x,y) \geq 0$ for all (x,y) in the domain i.e. $x, y \in \mathbb{R}$
2. Normalization $\int_{-\infty}^{\infty}\int_{-\infty}^{\infty} f_{XY}(x,y)\,dx\,dy = 1$

$$\therefore \int_0^b \int_0^1 3xy\,dx\,dy = 1.$$

integrate wrt x

$$\int_0^b 3y\left[\frac{x^2}{2}\right]_0^1 dy = 1 \quad \text{or} \quad \int_0^b 3y\left[\frac{1}{2}\right] dy = 1$$

$$\text{or} \quad \frac{3}{2}\int_0^b y\,dy = 1 \quad \text{or} \quad \left[\frac{y^2}{2}\right]_0^b = \frac{2}{3} \quad \text{or} \quad \frac{b^2}{2} = \frac{2}{3}$$

$$\text{or } b^2 = 4/3 \quad \text{or} \quad b = \pm\sqrt{4/3} \quad \text{or} \quad b = \pm\frac{2}{\sqrt{3}}$$

Since $0 \leq y \leq b$ i.e positive direction

& $f_{XY}(x,y) = 3xy$ to be non negative $\forall x, y \in \mathbb{R}$

only positive value is possible.

$\therefore$ The constant b is $+\frac{2}{\sqrt{3}}$ Ans

1
(b) $$f_{XY}(x,y) = \begin{cases} bx(1-y) & 0 \le x \le 0.5, \quad 0 \le y \le 1 \\ 0 & \text{elsewhere.} \end{cases}$$

We will use same condition of pdf as in (1(a))

i.e. $$\int_{-\infty}^{\infty}\int_{-\infty}^{\infty} f_{XY}(x,y)\,dx\,dy = 1$$

for our case integrating w.r.t x, $$\int_0^{0.5}\int_0^1 bx(1-y)\,dy\,dx = 1.$$

or $$b\int_0^{0.5} x.\left[y - \frac{y^2}{2}\right]_0^1 dx = 1$$

or, $$b\int_0^{0.5} x\left[\frac{1}{2}\right] dx = 1 \quad \text{or} \quad \frac{b}{2}\int_0^{0.5} x\,dx = 1$$

or $$\left[\frac{x^2}{2}\right]_0^{0.5} = \frac{2}{b}$$

or $$\frac{(1/2)^2}{2} = \frac{2}{b}$$

or $$b = \frac{2.2}{(1/2)^2} \quad \text{or} \quad b = \frac{4}{\frac{1}{4}} = 16$$

$\therefore$ for $b = 16$, $f_{XY}(x,y)$ is $16x(1-y)$

& since x & $1-y$ are non negative & $x \in [0, 0.5]$ & $y \in [0, 1]$ & total integral is 1 so valid pdf.

& $b = 16$ is correct. <u>Ans</u>

1 (c) $$f_{XY}(x,y) = \begin{cases} b(x^2+4y^2) & 0 \le |x| < 1,\ 0 \le y \le 2 \\ 0 & \text{elsewhere} \end{cases}$$

$0 \le |x| \le 1$ all points whose distance from origin is less than 1. & $-1 < x < 1$

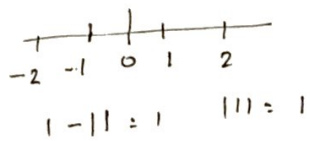

$$\therefore \int_{-\infty}^{\infty}\int_{-\infty}^{\infty} f_{XY}(x,y)\,dx\,dy = 1.$$

or $$b\int_0^2\int_{-1}^{+1}(x^2+4y^2)\,dx\,dy = 1.$$

or $$b\int_0^2\left[\frac{x^3}{3}+4y^2x\right]_{-1}^{1}dy = 1 \quad \text{or} \quad b\int_0^2\left\{\left[\frac{1}{3}+4y^2+\frac{1}{3}+4y^2\right]dy = 1\right.$$

or $$b\int_0^2\left(\frac{2}{3}+8y^2\right)dy = 1 \quad \text{or} \quad b\left\{\left[\frac{2}{3}y+8\frac{y^3}{3}\right]_0^2\right\} = 1$$

or $$b\left\{\left(\frac{2.2}{3}+\frac{8.8}{3}\right)-(0)\right\} = 1$$

or $$b\left\{\frac{4}{3}+\frac{64}{3}\right\} = 1 \quad \text{or} \quad b\,\frac{68}{3} = 1 \quad \text{or} \quad b = \frac{3}{68}$$

also since x^2 & $4y^2$ are non negative & b is positive

$\therefore f_{XY} \geq 0$ here

so $b = \frac{3}{68}$ <u>Ans</u>

2. $f_{XY}(x,y) = g(x)\,h(y)$

to find marginal pdf's $f_X(x)$ and $f_Y(y)$.

the marginal pdf's of X and Y are

$$f_X(x) = \int_{-\infty}^{\infty} f_{XY}(x,y)\,dy \qquad \forall x \in \mathbb{R}$$

$$= g(x)\int_{-\infty}^{\infty} h(y)\,dy$$

$$f_Y(y) = \int_{-\infty}^{\infty} f_{XY}(x,y)\,dx \qquad \forall y \in \mathbb{R}$$

$$= h(y)\int_{-\infty}^{\infty} g(x)\,dx$$

also $\displaystyle\int_{-\infty}^{\infty} g(x)\,dx \cdot \int_{-\infty}^{\infty} h(y)\,dy = 1.$

3. $f_{XY}(x,y)$ is uniform with region of support

to find $f_X(x)$ and $f_Y(y)$.

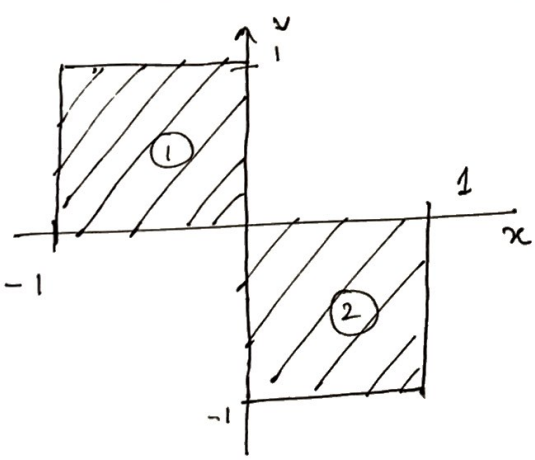

$-1 \leq x \leq 1$

$-1 \leq y \leq 1$

Square 1 $w = 1,\ h = 1$, area $= w \times h = 1$

" 2 $w = 1,\ h = 1$, area $= w \times h = 1.$

Total area = square 1 area + square 2 area

$= 1 + 1 = 2$

Since $f_{XY}(x,y)$ is uniform with region

$$\therefore f_{XY}(x,y) = \begin{cases} 1/2 & \text{in shaded area/region} \\ 0 & \text{elsewhere.} \end{cases}$$

Now we need marginal pdf.

$$f_X(x) = \int_{-\infty}^{\infty} f_{XY}(x,y)\,dy$$

for square ①, $-1 \leq x \leq 0$, $y \in [0,1]$

$$f_X(x) = \int_0^1 \frac{1}{2}\,dy = \frac{1}{2}$$

for square ②, $0 \leq x \leq 1$, $y \in [-1,0]$

$$f_X(x) = \int_{-1}^{0} \frac{1}{2}\,dy = \frac{1}{2}$$

$\therefore$ $f_X(x) = \frac{1}{2}$ for $-1 \leq x \leq 1$ <u>Ans</u>

$= 0$ elsewhere

$$f_Y(y) = \int_{-\infty}^{\infty} f_{XY}(x,y)\,dx$$

for square ① $0 \leq y \leq 1$, $x \in [-1,0]$

$$f_Y(y) = \int_{-1}^{0} \frac{1}{2}\,dx = \frac{1}{2}$$

for square ② & $-1 \leq y \leq 0$, $x \in [0,1]$

$$\therefore f_Y(y) = \int_0^1 \frac{1}{2}\,dx = \frac{1}{2}$$

$\therefore$ $f_Y(y) = \frac{1}{2}$ for $-1 \leq y \leq 1$ <u>Ans</u>

$= 0$ elsewhere.

4 The random vector (X, Y) has a joint pdf

$$f_{XY}(x,y) = \begin{cases} 2e^{-x}e^{-2y} & x>0,\ y>0 \\ 0 & \text{otherwise} \end{cases}$$

to find prob of following events

(a) $\{X+Y \leq 8\}$

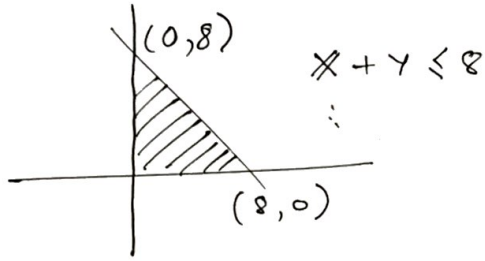

$$\int_0^8 \int_0^{8-x} f_{XY}(x,y)\, dy\, dx$$

$$\therefore \int_0^8 \underbrace{\int_0^{8-x} (2e^{-x}e^{-2y})\, dy}\, dx$$

first the inner integral

$$2\int_0^{8-x} e^{-x}e^{-2y}\, dy = 2e^{-x}\int_0^{8-x} e^{-2y}\, dy$$

$$= 2e^{-x}\left[-\frac{e^{-2y}}{2}\right]_0^{8-x} = 2e^{-x}\left[-\frac{e^{-2(8-x)}}{2} + \frac{e^0}{2}\right]$$

$$= 2e^{-x}\left[-\frac{e^{-16+2x}}{2} + \frac{1}{2}\right)$$

$$= e^{-x} - e^{x-16}$$

Now outer integral

$$\int_0^8 (e^{-x} - e^{x-16})\, dx = \left[-e^{-x}\right]_0^8 - \int_0^{\infty} e^{x-16}\, dx$$

$$= -e^{-8} + 1 - \left[e^{-16} \cdot e^{x} \right]_0^8$$

$$= 1 - e^{-8} - e^{-16}\left[e^{8} - 1 \right]$$

$$= 1 - e^{-8} - e^{-8} + e^{-16}$$

$$= 1 - 2e^{-8} + e^{-16}$$

$\frac{1}{e^{2x}}$

$$\therefore P(X + Y \leq 8) = 1 - 2e^{-8} + e^{-16}$$ Ans

4.
(b) $P\{X < Y\}$ $\therefore$

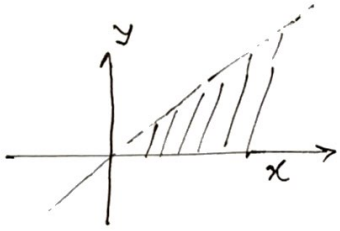

$$= \int_0^\infty \underbrace{\int_x^\infty 2e^{-x} e^{-2y}\, dy}_{\text{inner integration first,}}\, dx$$

$$2e^{-x}\int_x^\infty e^{-2y}\, dy = 2e^{-x}\left[-\frac{e^{-2y}}{2} \right]_x^\infty = 2e^{-x}\left[0 - \left(-\frac{1}{2} e^{-2x} \right) \right]$$

$$= 2e^{-x}\left(\frac{1}{2} e^{-2x} \right) = e^{-3x}$$

Now other integral

$$\int_0^\infty e^{-3x}\, dx = -\left[\frac{e^{-3x}}{3} \right]_0^\infty = -\left[0 - \frac{1}{3} \right]$$

$$= \frac{1}{3}$$

$$\therefore P\{X < Y\} = \frac{1}{3}$$

4 (c) $P\{X^2 < Y\}$

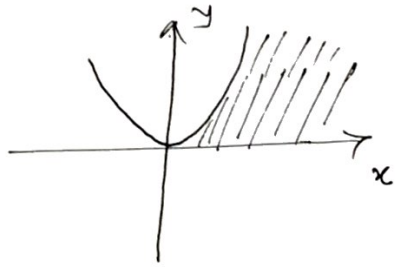

here limit of integration

$$= \int_{x=0}^{\infty} \int_{y=x^2}^{\infty} \left(2e^{-x} e^{-2y}\right) dy\, dx$$

Inner integral first

$$2e^{-x} \int_{x^2}^{\infty} e^{-2y}\, dy = 2e^{-x} \left[-\frac{e^{-2y}}{2} \right]_{x^2}^{\infty}$$

$$= 2e^{-x} \left[0 + \frac{e^{-2x^2}}{2} \right]$$

$$= e^{-x} e^{-2x^2}$$

$$= e^{-2x^2 - x}$$

next outer integral

$$\int_0^{\infty} \left(e^{-2x^2 - x}\right) dx$$

$$= \int_0^{\infty} e^{-2x^2 - x}\, dx$$

exponent $-2x^2 - x = -2\left(x^2 + \frac{x}{2}\right)$

$= -2\left(\left(x + \frac{1}{4}\right)^2 - \frac{1}{16}\right)$

$= -2\left(x + \frac{1}{4}\right)^2 + \frac{1}{8}$

$$= \int_0^{\infty} e^{1/8} e^{-2(x + 1/4)^2}\, dx = e^{1/8} \int_0^{\infty} e^{-2(x + 1/4)^2}\, dx$$

$$= \frac{\sqrt{\pi}}{2\sqrt{2}} e^{1/8} \operatorname{erfc}\left(\sqrt{2}/4\right)$$

$$\therefore P(X^2 < Y) = \frac{\sqrt{\pi}}{2\sqrt{2}} e^{1/8} \operatorname{erfc}\left(\frac{\sqrt{2}}{4}\right)$$ Ans

5 Let arrival times of the two people are denoted by two r.v's X and Y.

Since the times are independent and uniformly distributed between 12.00 noon to 1.00 pm. i.e. 60 minutes.

Question says first one to arrive has to wait longer than 10 mins. i.e. $|X-Y| > 10$

So we want to find out $P(|X-Y|) > 10$

& given $0 \leq X \leq 60$ & $0 \leq Y \leq 60$

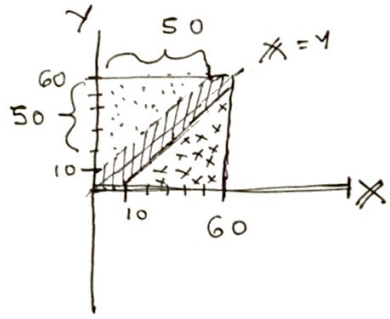

Square total area $= 60 \times 60 = 3600 \text{ mins}^2$ since independent.

Area of upper triangle

$$= \frac{1}{2} \times 50 \times 50 = 1250 \text{ min}^2$$

Area of lower triangle

$$= \frac{1}{2} \times 50 \times 50 = 1250 \text{ min}^2$$

$\therefore$ Total area of the two triangles $2 \times 1250 = 2500 \text{ min}^2$

$$\therefore P(|X-Y| > 10) = \frac{\text{area of 2 triangle}}{\text{Total area}} = \frac{2500}{3600}$$

$$= \frac{25}{36} \sim 0.69, \text{ or } 69\%.$$

Ans

6 X and Y are discrete r.v's. to show that there is a set $D \in \mathcal{B}(\mathbb{R}^2)$ such that D is finite or countably infinite and $P((X,Y) \in D) = 1$.

By definition, r.v is discrete if its support is finite or countably infinite i.e. it takes values in a set that is countably infinite or finite.

Since X is discrete, there exists countable set $S_X = \{x_1, x_2, \ldots\}$ (10)
such that $P(X \in S_X) = 1$ $\quad \sum P(X = x) = 1$ $\quad \subset \mathbb{R}$

Similarly Y is discrete with values in countable set

$$S_Y = \{y_1, y_2, y_3 \ldots\}, \sum_{y \in S_Y} P(Y = y) = 1 \quad \& \quad P(Y \in S_Y) = 1$$

Since X takes values in S_X and Y in S_Y, the pair (X, Y) can take values in the cartesian product.

$$D := S_X \times S_Y = \{(x, y) \mid x \in S_X, y \in S_Y\}$$

if S_X & S_Y are finite, D is finite & if either of them is countably infinite, D is countably infinite.

So $D \subset \mathbb{R}^2$ is finite or countable and $D \in B(\mathbb{R}^2)$ because all finite or countable sets are Borel set.

Also by definition $D = S_X \times S_Y$:

$$\therefore P((X, Y) \in D) = P((X, Y) \in S_X \times S_Y)$$

but $X \in S_X$ and $Y \in S_Y$ with probability 1

hence $P((X, Y) \in D) = 1$.

Ans

7. X & Y are statistically independent

if $f_{XY}(x,y) = f_X(x) f_Y(y) \quad \forall\, x, y \in \mathbb{R}$

X and Y are independent if

$$F_{X,Y}(x,y) = F_X(x)\, F_Y(y) \qquad \forall x, y \in \mathbb{R}$$

where $F_{X,Y}$ joint cdf & F_X, F_Y are marginal cdf's.

Let's assume X and Y are independent.

$$\therefore \quad f_{X,Y}(x,y) = \frac{\partial^2}{\partial x \partial y} F_{X,Y}(x,y)$$

$$= \frac{\partial^2}{\partial x \partial y} \left[F_X(x) F_Y(y) \right]$$

$$= \frac{\partial}{\partial x} F_X(x) \cdot \frac{d}{dy} F_Y(y)$$

$$f_{X,Y}(x,y) = f_X(x) \cdot f_Y(y) \qquad \square$$

Also, we can assume $f_{X,Y}(x,y) = f_X(x)\, f_Y(y) \quad \forall x, y \in \mathbb{R}$

then by definition

$$F_{X,Y}(x,y) = \int_{-\infty}^{y} \int_{-\infty}^{x} f_{X,Y}(x', y')\, dx'\, dy'$$

$$= \int_{-\infty}^{x} \int_{-\infty}^{y} f_X(x')\, f_Y(y')\, dy'\, dx'$$

$$= \left(\int_{-\infty}^{x} f_X(x')\, dx \right) \left(\int_{-\infty}^{y} f_Y(y')\, dy' \right)$$

$$= F_X(x)\, F_Y(y)$$

Since here factorization of cdf implies independence.

we prove $f_{X,Y}(x,y) = f_X(x)\, f_Y(y)$ is both necessary and sufficient for statistical independence of X & Y $\square$

(8) A pair of dice rolled.

X be greater and Y the smaller of the number.

Total $6 \times 6 = 36$ possible outcomes and each outcome likely $(1/36)$

So $X = \max(D_1, D_2)$

$Y = \min(D_1, D_2)$

we want joint pmf $P(X = x, Y = y)$ & marginal pmf's.

if $x < y$, Prob $= 0$

if $x = y$, $P(X = x, Y = y) = \frac{1}{36}$

if $x > y$ ie. $D1 = x$, $D2 = y$ $\quad P(X = x, Y = y) = \frac{2}{36}$

$D1 = y$, $D_2 = x$

joint pmf table will be like below.

Y/X	1	2	3	4	5	6
1	1/36	2/36	2/36	2/36	2/36	2/36
2	0	1/36	2/36	2/36	2/36	2/36
3	0	0	1/36	2/36	2/36	2/36
4	0	0	0	1/36	2/36	2/36
5	0	0	0	0	1/36	2/36
6	0	0	0	0	0	1/36

Total

$3 \times \frac{1}{36} + 15 \times \frac{2}{36}$

$= \frac{36}{36} = 1$

$\therefore \sum \sum p(x_i y_j) = 1$

Distribution of X:

$P(X = 1) = 1/36$, $P(X = 2) = \frac{3}{36}$, $P(X = 3) = 5/36$, $P(X = 4) = 7/36$

marginal pmf of X: $P(X = 5) = 9/36$, $P(X = 6) = \frac{11}{36}$

Marginal pmf of Y:

$P(Y = 1) = 11/36$, $P(Y = 2) = 9/36$, $P(Y = 3) = 7/36$

$P(Y = 4) = 5/36$, $P(Y = 5) = 3/36$, $P(Y = 6) = 1/36$

Ans

$\therefore$ Joint pmf $\quad P(X = x, Y = y) = \begin{cases} 1/36 & x = y \\ 2/36 & x > y \\ 0 & x < y \end{cases}$

Marginal pmf's

$$f_X(x) = \frac{1}{36}, \frac{3}{36}, \frac{5}{36}, \frac{7}{36}, \frac{9}{36}, \frac{11}{36}$$

$$f_Y(y) = \frac{11}{36}, 9/36, 7/36, 5/36, 3/36, 1/36$$

Ans.

(9) Fair coin. Repeated tosses.
head appears first time after X tosses, X a r.v.
& tails appear first time after Y tosses, Y also r.v.
Fair coin so both heads / tails equally probable

$\therefore p = \frac{1}{2}$

we consider possible values of $x, y \in \{1, 2, 3, \ldots\}$

when $x = y$, impossible for one coin to be both ~~of heads~~ first head & first tails

$\therefore P(X = x, Y = y) = 0$ when $x = y$

when $x > 1$, $y > 1$, X & Y can't both be greater than 1 at same time.

$P(X = x, Y = y) = 0$ for $x > 1$, $y > 1$

when $x > 1$ & $y = 1$

$Y = 1$ & $X = x$, so, $\underbrace{T, T, T, \ldots T}_{x-1 \text{ tails}}, H$

$$\therefore P(X = x, Y = 1) = \left(\frac{1}{2}\right)^{x-1}\left(\frac{1}{2}\right) = \left(\frac{1}{2}\right)^{x} \text{ for } x = 2, 3, \ldots$$

when $y > 1$, $x = 1$ $\quad \underbrace{H\ H\ H\ H \ldots H}_{y-1}, T$

$$P(X = 1, Y = y) = \left(\frac{1}{2}\right)^{y-1}\left(\frac{1}{2}\right) = \left(\frac{1}{2}\right)^{y} \text{ for } y = 2, 3, \ldots$$

$\therefore$ joint pmf $P(X=x, Y=y) = \begin{cases} (1/2)^x & \text{if } x>1, y=1 \\ (1/2)^y & \text{if } x=1, y>1 \\ 0 & \text{otherwise.} \end{cases}$

Marginal pmf of X

$$P(X=x) = \sum_{y=1}^{\infty} P(X=x, Y=y)$$

if $x=1$, $P(X=1) = \sum_{y=2}^{\infty} \left(\frac{1}{2}\right)^y = \frac{1/4}{1-1/2} = 1/2$

if $x>1$ $\quad P(X=x) = P(X=x, Y=1) = \left(\frac{1}{2}\right)^x$

$\therefore \quad P(X=x) = \left(\frac{1}{2}\right)^x$ for all $x \in \{1, 2, \dots\}$

Marginal pmf of Y

$$P(Y=y) = \sum_{x=1}^{\infty} P(X=x, Y=y)$$

if $y=1$ $\quad P(Y=1) = \sum_{x=2}^{\infty} \left(\frac{1}{2}\right)^x = \frac{1}{2}$

$y>1$ $\quad P(Y=y) = P(X=1, Y=y) = \left(\frac{1}{2}\right)^y$

$\therefore \quad P(Y=y) = \left(\frac{1}{2}\right)^y$ for all $y \in \{1, 2, \dots\}$