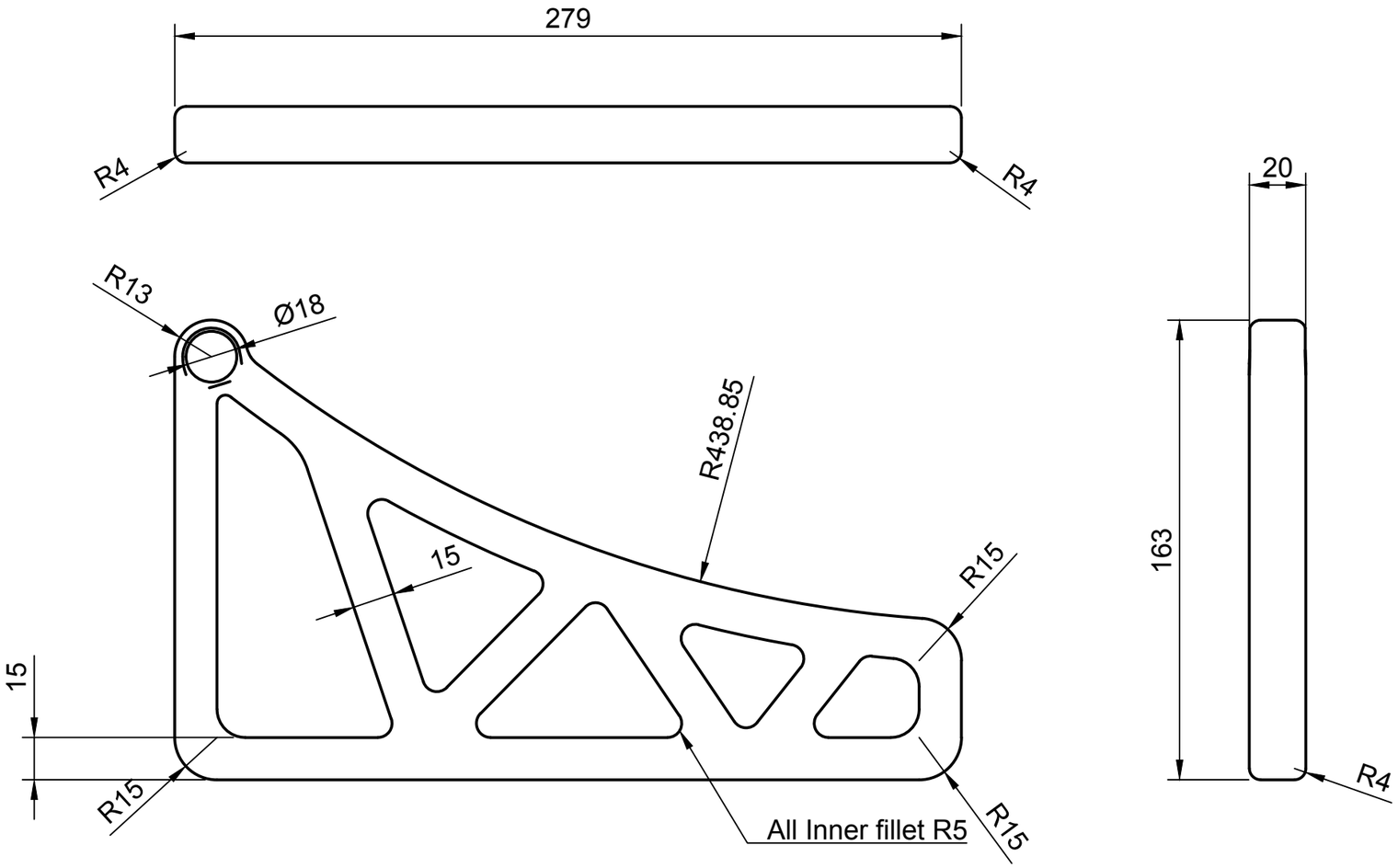


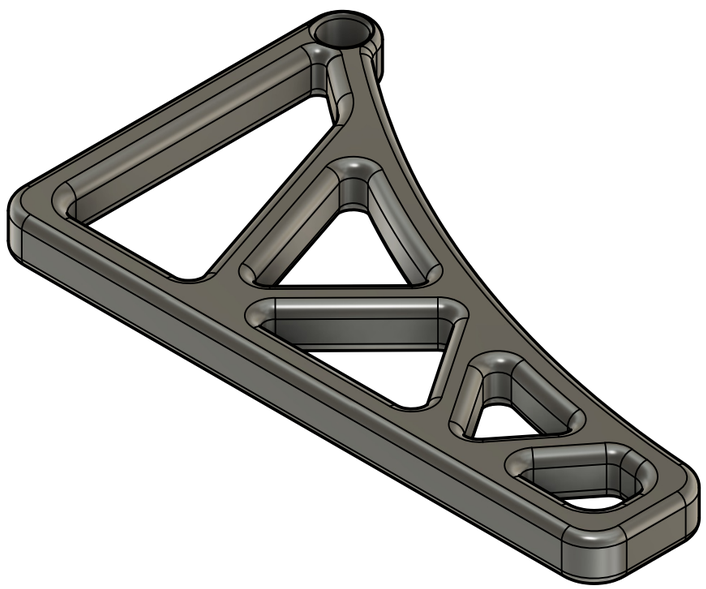

| | | | |
|---|---|---|---|
| Dept. | Technical reference | Created by<br>Team VadaPav 07/10/24 | Approved by |
| All Dimensions are in mm | | Document type | Document status |
| | | Title<br>ME-245<br>Main_Structure | DWG No. |
| | | | Rev. / Date of issue / Sheet 1/1 |