sunny_sheet_1

File: sunny.kicad_sch

Flyback_optocoupler_power_converter

chandu_sheet_2

File: chandu.kicad_sch

Esp32wrover_monitoring_isegBps

Sheet: /
File: chandra_queenofnight.kicad_sch

Title:

Size: A4	Date:	**Rev:**
KiCad E.D.A. 10.0.1		Id: 1/3

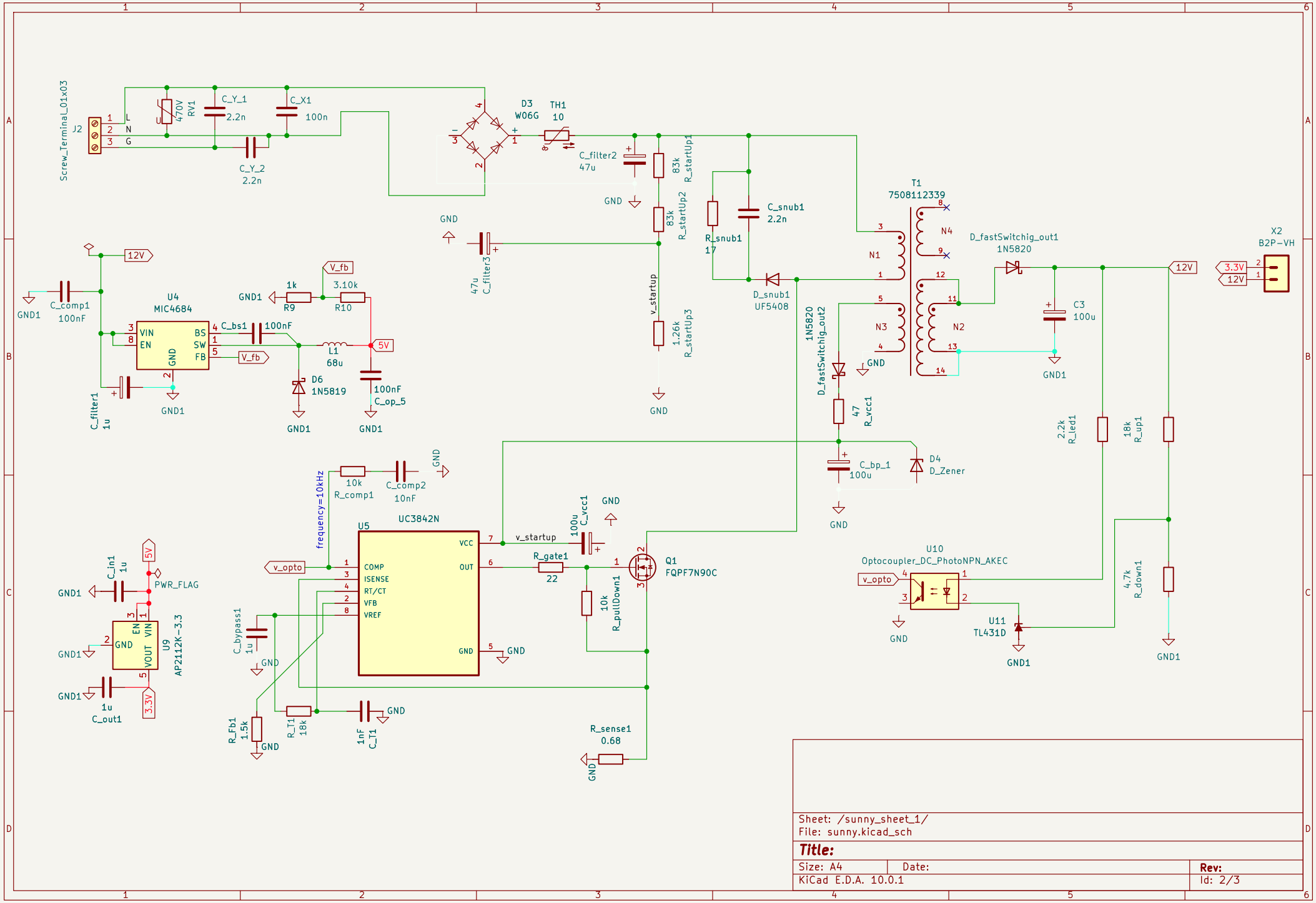

Sheet: /sunny_sheet_1/
File: sunny.kicad_sch

Title:

Size: A4	Date:	Rev:
KiCad E.D.A. 10.0.1		Id: 2/3

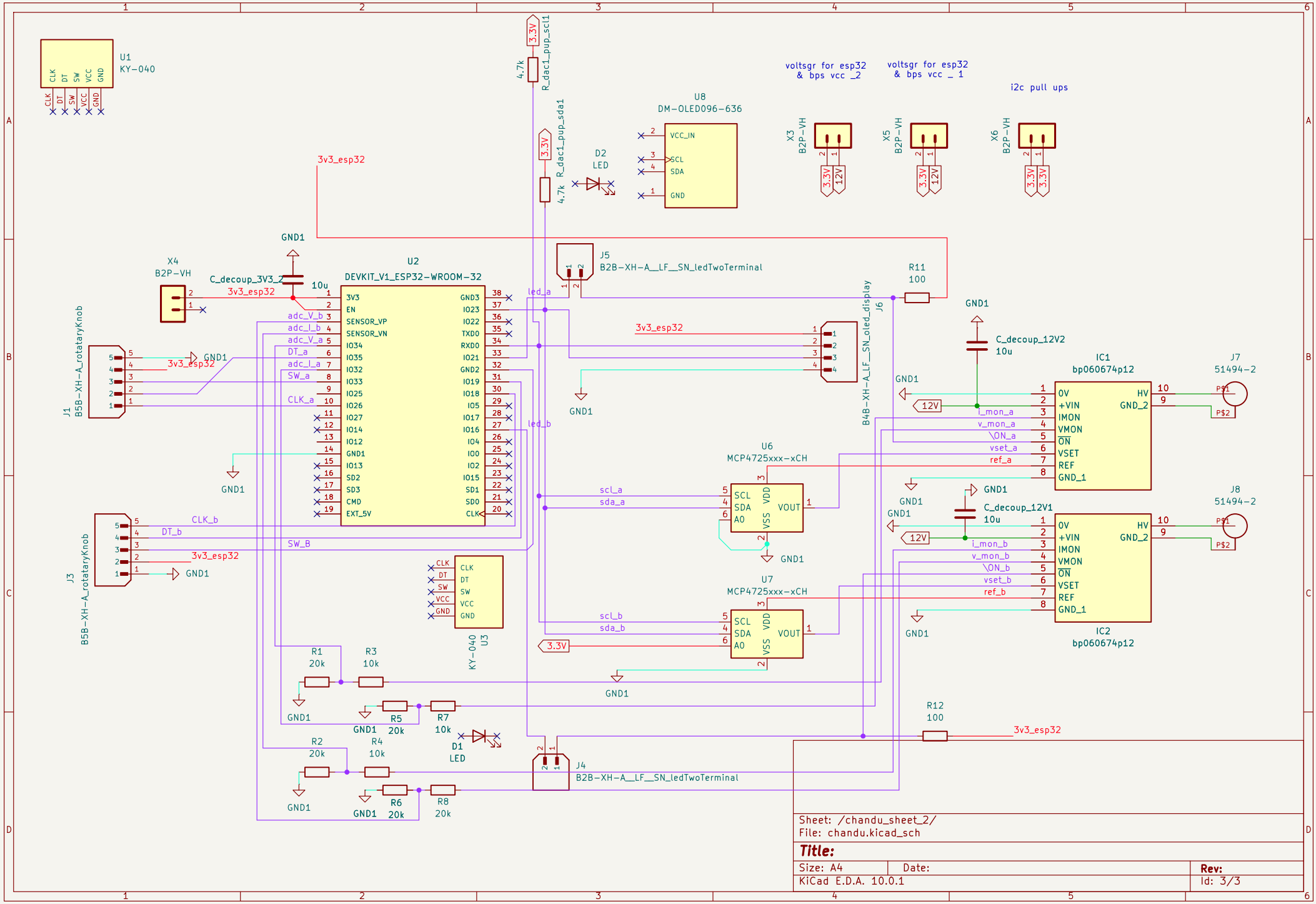
U1
KY-040
CLK
DT
SW
VCC
GND
4.7k
R_dac1_pup_scl1
R_dac1_pup_sda1
3.3V
3v3_esp32
D2
LED
U8
DM-OLED096-636
VCC_IN
SCL
SDA
GND
voltsgr for esp32 & bps vcc _2
voltsgr for esp32 & bps vcc _ 1
i2c pull ups
X3
X5
X6
B2P-VH
12V
GND1
X4
C_decoup_3V3_2
10u
U2
DEVKIT_V1_ESP32-WROOM-32
3V3
EN
SENSOR_VP
SENSOR_VN
IO34
IO35
IO32
IO33
IO25
IO26
IO27
IO14
IO12
GND1
IO13
SD2
SD3
CMD
EXT_5V
GND3
IO23
IO22
TXD0
RXD0
IO21
GND2
IO19
IO18
IO5
IO17
IO16
IO4
IO0
IO2
IO15
SD1
SD0
CLK
J5
B2B-XH-A__LF__SN_ledTwoTerminal
R11
100
J6
B4B-XH-A_LF__SN_oled_display
C_decoup_12V2
IC1
bp060674p12
OV
+VIN
IMON
VMON
ON
VSET
REF
GND_1
HV
GND_2
J7
51494-2
P$1
P$2
i_mon_a
v_mon_a
\ON_a
vset_a
ref_a
J1
B5B-XH-A_rotataryKnob
adc_V_b
adc_I_b
adc_V_a
DT_a
adc_I_a
SW_a
CLK_a
led_a
led_b
U6
MCP4725xxx-xCH
SCL
SDA
A0
VDD
VSS
VOUT
scl_a
sda_a
C_decoup_12V1
J8
i_mon_b
v_mon_b
\ON_b
vset_b
ref_b
IC2
CLK_b
DT_b
SW_B
J3
U7
scl_b
sda_b
KY-040
U3
R1
20k
R3
10k
R5
20k
R7
10k
R2
20k
R4
10k
R6
20k
R8
20k
D1
LED
J4
B2B-XH-A__LF__SN_ledTwoTerminal
R12
100
Sheet: /chandu_sheet_2/
File: chandu.kicad_sch
Title:
Size: A4
Date:
Rev:
KiCad E.D.A. 10.0.1
Id: 3/3