sunny_sheet_1

File: sunny.kicad_sch

Flyback_optocoupler_power_converter

chandu_sheet_2

File: chandu.kicad_sch

Esp32wrover_monitoring_isegBps

Sheet: /
File: chandra_queenofnight.kicad_sch

Title:

Size: A4	Date:	**Rev:**
KiCad E.D.A. 10.0.0		Id: 1/3

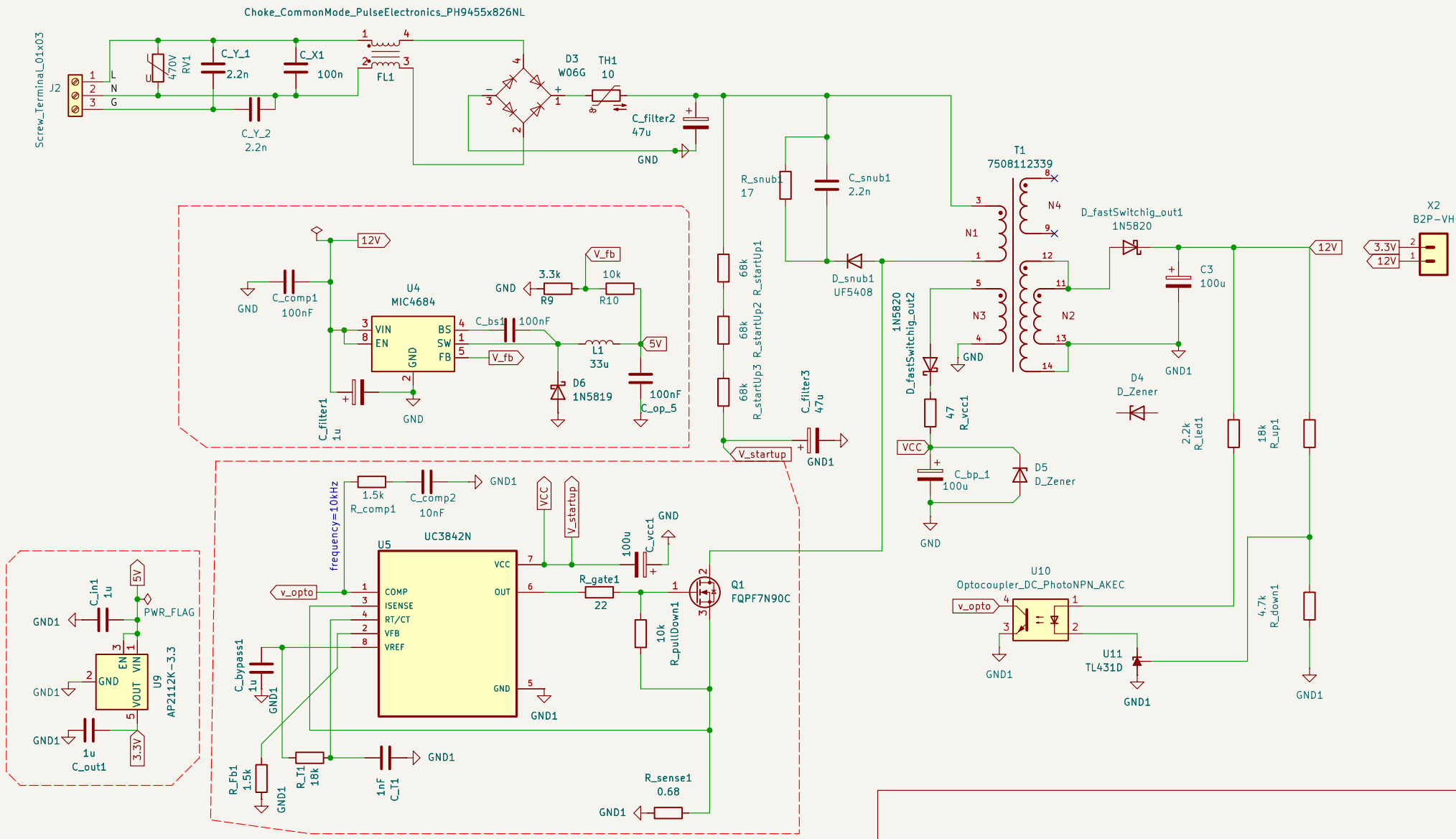

Sheet: /sunny_sheet_1/
File: sunny.kicad_sch

Title:

Size: A4	Date:	Rev:
KiCad E.D.A. 10.0.0		Id: 2/3

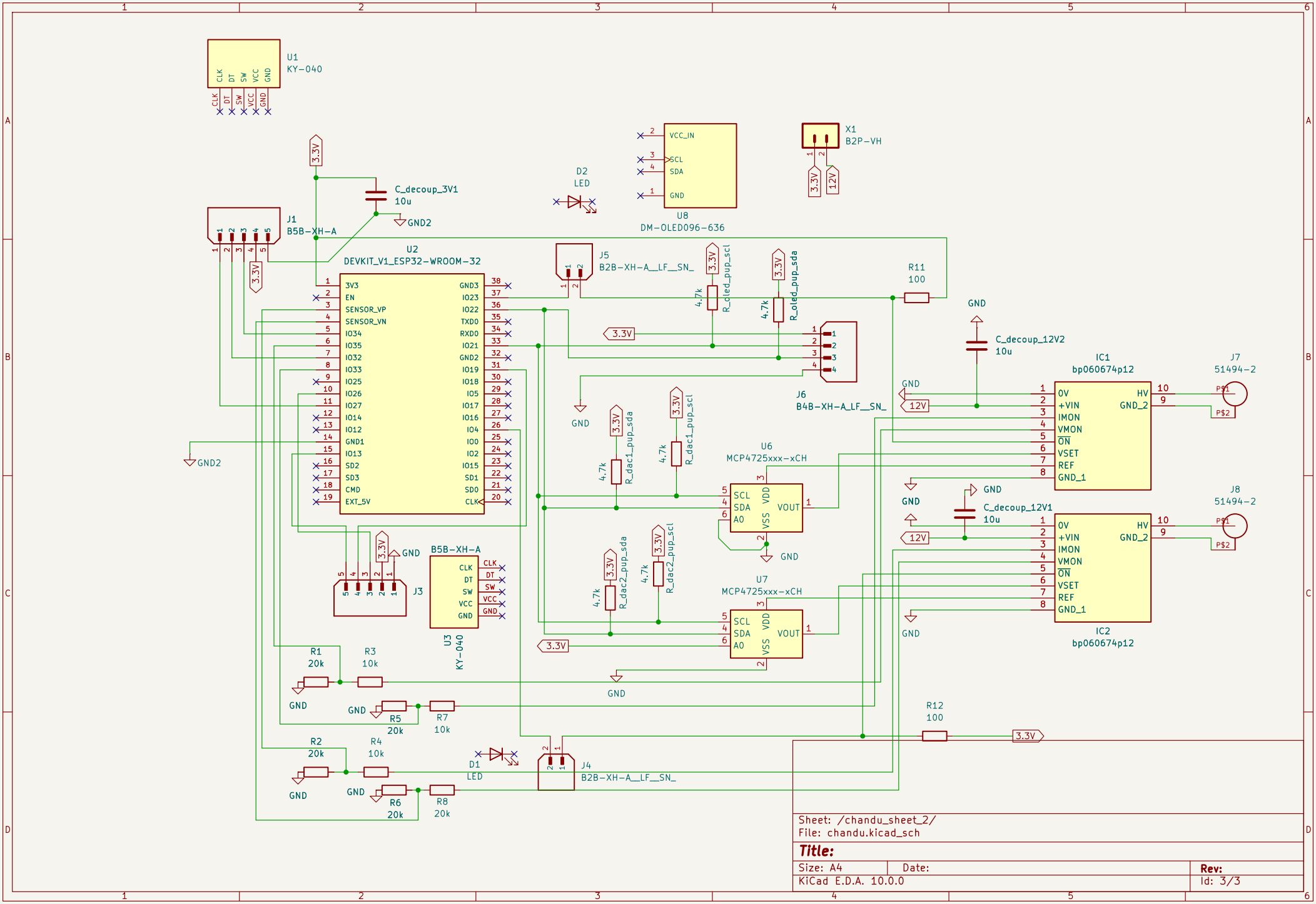
U1
KY-040
CLK
DT
SW
VCC
GND
J1
B5B-XH-A
3.3V
C_decoup_3V1
10u
GND2
U2
DEVKIT_V1_ESP32-WROOM-32
3V3
EN
SENSOR_VP
SENSOR_VN
IO34
IO35
IO32
IO33
IO25
IO26
IO27
IO14
IO12
GND1
IO13
SD2
SD3
CMD
EXT_5V
GND3
IO23
IO22
TXD0
RXD0
IO21
GND2
IO19
IO18
IO5
IO17
IO16
IO4
IO0
IO2
IO15
SD1
SD0
CLK
D2
LED
U8
DM-OLED096-636
VCC_IN
SCL
SDA
GND
X1
B2P-VH
12V
J5
B2B-XH-A_LF__SN_
4.7k
R_oled_pup_scl
R_oled_pup_sda
R11
100
J6
B4B-XH-A_LF__SN_
C_decoup_12V2
10u
IC1
bp060674p12
OV
+VIN
IMON
VMON
ON
VSET
REF
GND_1
HV
GND_2
J7
51494-2
P$1
P$2
R_dac1_pup_sda
R_dac1_pup_scl
U6
MCP4725xxx-xCH
SCL
SDA
A0
VDD
VSS
VOUT
C_decoup_12V1
10u
IC2
bp060674p12
J8
51494-2
R_dac2_pup_sda
R_dac2_pup_scl
U7
MCP4725xxx-xCH
J3
B5B-XH-A
U3
KY-040
R1
20k
R3
10k
R5
20k
R7
10k
R2
20k
R4
10k
R6
20k
R8
20k
D1
LED
J4
B2B-XH-A_LF__SN_
R12
100
Sheet: /chandu_sheet_2/
File: chandu.kicad_sch
Title:
Size: A4
Date:
Rev:
KiCad E.D.A. 10.0.0
Id: 3/3