sunny_sheet_1

File: sunny.kicad_sch

Flyback_optocoupler_power_converter

chandu_sheet_2

File: chandu.kicad_sch

Esp32wrover_monitoring_isegBps

Sheet: /
File: chandra_queenofnight.kicad_sch

Title:

Size: A4	Date:	**Rev:**
KiCad E.D.A. 10.0.0		Id: 1/3

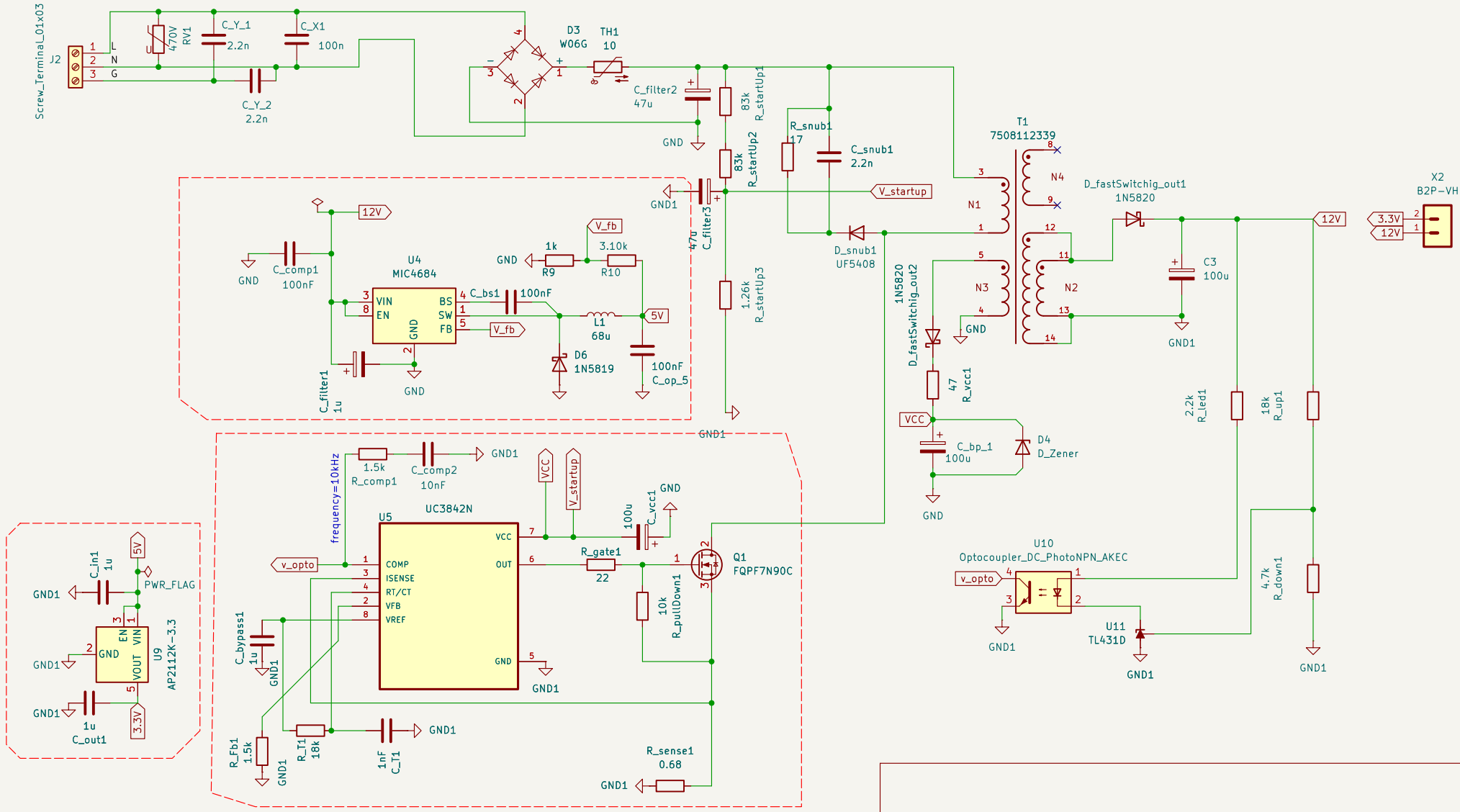

Sheet: /sunny_sheet_1/
File: sunny.kicad_sch

Title:

Size: A4	Date:	Rev:
KiCad E.D.A. 10.0.0		Id: 2/3

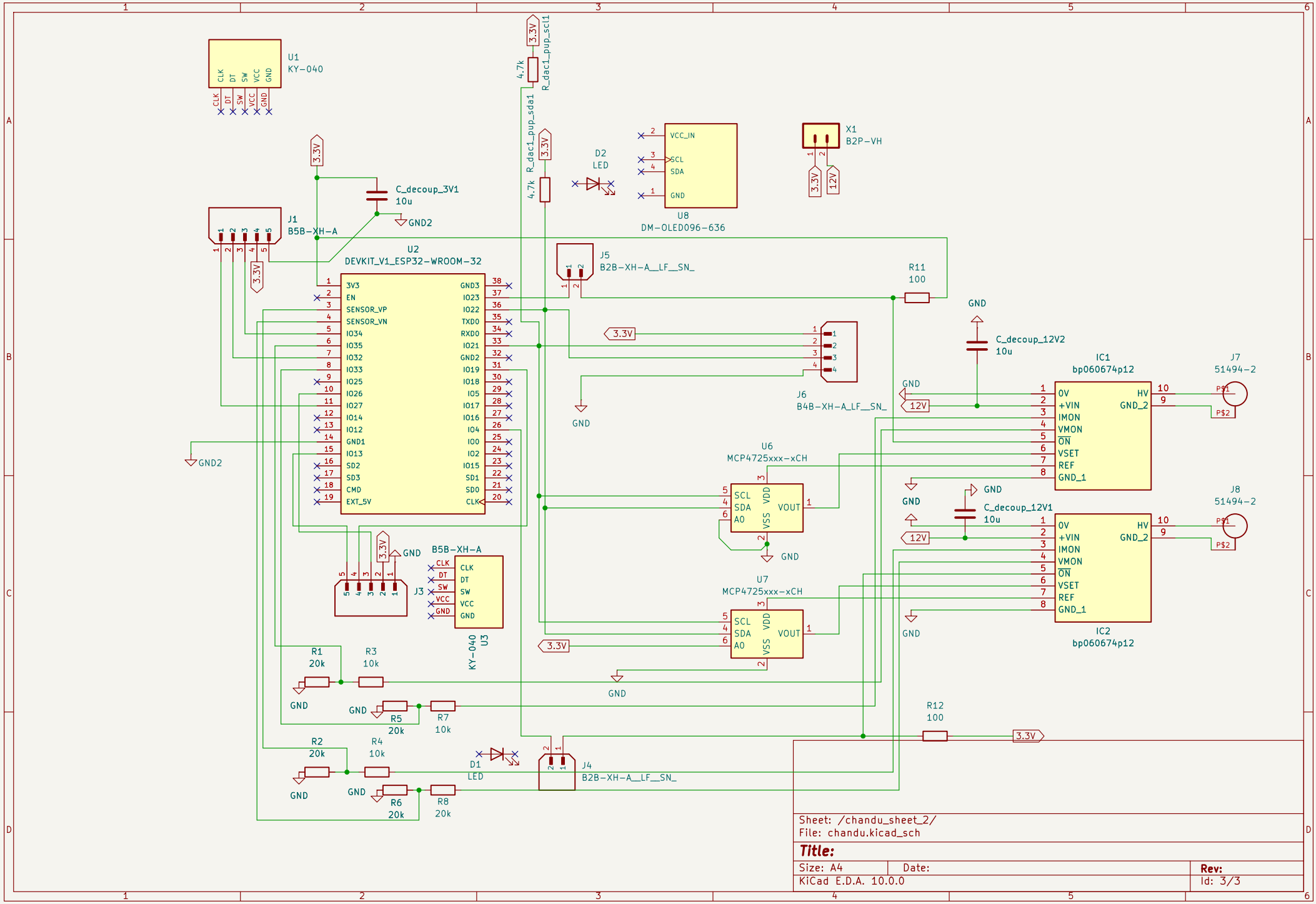

Sheet: /chandu_sheet_2/
File: chandu.kicad_sch

Title:

Size: A4	Date:	Rev:
KiCad E.D.A. 10.0.0		Id: 3/3