Lecture 11 (sections 5.1,5.2)

The quantum Fourier transform and applications

- The best classical algorithm to factor an n-bit integer (*the number field sieve*) can be implemented in

$$\exp\left(n^{1/3}\ln^{2/3} n\right)$$

operations

- The corresponding Shor's quantum algorithm requires

$$n^2 \ln n \ln\ln n$$

operations

$\Longrightarrow$ The plan:

- We learn qFT (*quantum Fourier transform)* algorithm
- We learn how to apply it to phase estimation of an eigenvalue of a unitary matrix
- $\Longrightarrow$ Above are crucial ingredients of the Shor's algorithm (and a number of related algorithms)

qFT

- Recall a discrete cFT (*classical Fourier transform*):

$$\{x_0, \cdots, x_{N-1}\} \xrightarrow{\text{cFT}} \{y_0, \cdots y_{N-1}\}$$

$$y_k \equiv \frac{1}{\sqrt{N}} \sum_{j=0}^{N-1} x_j \cdot e^{\frac{2\pi ijk}{N}}$$

and inverse transform:

$$\{y_0, \cdots, y_{N-1}\} \xrightarrow{\text{cFT}^{-1}} \{x_0, \cdots x_{N-1}\}$$

$$x_n \equiv \frac{1}{\sqrt{N}} \sum_{k=0}^{N-1} y_k \cdot e^{-\frac{2\pi ink}{N}}$$

$\Longrightarrow$ completeness relation:

$$\mathrm{cFT}^{-1}\cdot\mathrm{cFT}\left\{x_n\right\}=\frac{1}{\sqrt{N}}\sum_{k=0}^{N-1}e^{-\frac{2\pi ink}{N}}\cdot\left(\frac{1}{\sqrt{N}}\sum_{j=0}^{N-1}x_j\cdot e^{\frac{2\pi ijk}{N}}\right)=\frac{1}{N}\sum_{j=0}^{N-1}x_j\cdot\sum_{k=0}^{N-1}\left(e^{\frac{2\pi i(j-n)}{N}}\right)^k$$

$$=\frac{1}{N}\sum_{j=0}^{N-1}x_j\cdot N\cdot\delta_{j,n}=x_n$$

- **<u>Def.</u>** qFT: let $|0\rangle,\cdots|N-1\rangle$ is the spanning set of the Hilbert space,

$$|j\rangle\ \xrightarrow{\mathrm{qFT}}\ \frac{1}{\sqrt{N}}\sum_{k=0}^{N-1}e^{\frac{2\pi ijk}{N}}\,|k\rangle$$

$\Longrightarrow$ qFT is a unitary operation —

- let's encode

$$|j\rangle=\begin{bmatrix}0\\ \vdots\\ 0\\ 1\\ 0\\ \vdots\\ 0\end{bmatrix}$$

where 1 is in $(j+1)$ row

- for $|\psi\rangle=\sum_j\psi_i\,|j\rangle$,

$$U_{qFT}\,|\psi\rangle=\frac{1}{\sqrt{N}}\begin{bmatrix}1 & 1 & \cdots & 1\\ 1 & e^{\frac{2\pi i}{N}} & \cdots & e^{\frac{2\pi i(N-1)}{N}}\\ & & \cdots & \\ 1 & e^{\frac{2\pi i(N-1)}{N}} & \cdots & e^{\frac{2\pi i(N-1)(N-1)}{N}}\end{bmatrix}\cdot\begin{bmatrix}\psi_0\\ \vdots\\ \psi_{N-1}\end{bmatrix}$$

$\Longrightarrow$

$$\left(U_{qFT}\right)_{\alpha\beta}=\frac{1}{\sqrt{N}}e^{\frac{2\pi i(\alpha-1)(\beta-1)}{N}},\qquad\left(U^{+}_{qFT}\right)_{\gamma\delta}=\frac{1}{\sqrt{N}}e^{-\frac{2\pi i(\delta-1)(\gamma-1)}{N}}$$

$\Longrightarrow$

$$\left(U^{+}_{qFT}U_{qFT}\right)_{\gamma\beta}=\sum_{\alpha}\left(U^{+}_{qFT}\right)_{\gamma\alpha}\left(U_{qFT}\right)_{\alpha\beta}=\frac{1}{N}\sum_{\alpha=1}^{N}e^{\frac{2\pi i(\alpha-1)((\beta-1)-(\gamma-1))}{N}}$$

$$=\frac{1}{N}\sum_{\alpha=1}^{N}\left(e^{\frac{2\pi i(\beta-\gamma)}{N}}\right)^{\alpha-1}=\frac{1}{N}\cdot N\cdot\delta_{\beta,\gamma}=\left(I_N\right)_{\gamma\beta}$$

- Some useful definitions:
  - let $N = 2^n$
  - $j \in [0, N-1]$ has a binary representation as $j_1 j_2 \dots j_n$,

$$j = j_1 \cdot 2^{n-1} + j_2 \cdot 2^{n-2} + \cdots + j_n \cdot 2^0 \qquad \Longleftrightarrow \qquad |j\rangle = |j_1 j_2 \dots j_n\rangle$$

We also define a binary fraction:

$$0.j_\ell j_{\ell+1} \dots j_m \equiv \underbrace{\frac{j_\ell}{2^1} + \frac{j_{\ell+1}}{2^2} + \cdots + \frac{j_m}{2^{m-(\ell-1)}}}_{top-bottom\ power\ \ = m-\ell+1}$$

- **!!!Theorem:** alternative representation for the qFT:

$$|j\rangle = |j_1 j_2 \dots j_n\rangle \xrightarrow{\text{qFT}} \frac{(|0\rangle + e^{2\pi i 0.j_n}|1\rangle) \cdot (|0\rangle + e^{2\pi i 0.j_{n-1}j_n}|1\rangle) \cdots (|0\rangle + e^{2\pi i 0.j_1 j_2 \dots j_n}|1\rangle)}{2^{n/2}}$$

Proof:

- $$|j\rangle \xrightarrow{\text{qFT}} \frac{1}{2^{n/2}} \sum_{k=0}^{2^n-1} e^{\frac{2\pi i j k}{2^n}} |k\rangle \equiv 1$$

  - note that —

$$\frac{2\pi i j (k_1 \cdot 2^{n-1} + \cdots k_n \cdot 2^0)}{2^n} = 2\pi i j \left(\frac{k_1}{2^1} + \cdots \frac{k_n}{2^n}\right) = 2\pi i j \cdot \sum_{\ell=1}^{n} \frac{k_\ell}{2^\ell}$$

  - continue,

$$1 = \frac{1}{2^{n/2}} \underbrace{\sum_{k_1=0}^{1} \cdots \sum_{k_n=0}^{1}}_{=\sum_{k=0}^{2^n-1}} e^{2\pi i j \frac{k_1}{2^1}} |k_1\rangle \otimes e^{2\pi i j \frac{k_2}{2^2}} |k_2\rangle \otimes \cdots \otimes e^{2\pi i j \frac{k_n}{2^n}} |k_n\rangle$$

$$= \frac{1}{2^{n/2}} \sum_{k_1=0}^{1} \cdots \sum_{k_n=0}^{1} \bigotimes_{\ell=1}^{n} e^{2\pi i j \frac{k_\ell}{2^\ell}} |k_\ell\rangle = \frac{1}{2^{n/2}} \bigotimes_{\ell=1}^{n} \left(\sum_{k_\ell=0}^{1} e^{2\pi i j \frac{k_\ell}{2^\ell}} |k_\ell\rangle\right) \equiv 2$$

  - note that —

$$j \cdot \frac{k_\ell}{2^\ell} = k_\ell \cdot \frac{j_1 \cdot 2^{n-1} + \cdots + j_{n-\ell+1} \cdot 2^{\ell-1} + \cdots + j_n \cdot 2^0}{2^\ell}$$

$$= k_\ell \left(\text{integer} + \frac{j_{n-\ell+1}}{2^1} + \frac{j_{n-\ell}}{2^2} + \cdots + \frac{j_n}{2^\ell}\right)$$

e.g.,

- $\underline{\ell = 1}$:

$$j \cdot \frac{k_1}{2^1} = k_1 \left(\text{integer} + \frac{j_n}{2} \right) = k_1 \left(\text{integer} + 0.j_n \right) = \text{integer} + k_1 \cdot 0.j_n$$

- $\underline{\ell = 2}$:

$$j \cdot \frac{k_2}{2^2} = k_2 \left(\text{integer} + \frac{j_n}{2^2} + \frac{j_{n-1}}{2^1} \right) = k_2 \left(\text{integer} + 0.j_{n-1} j_n \right) = \text{integer} + k_2 \cdot 0.j_{n-1} j_n$$

- now,

$$e^{2\pi i \cdot j \cdot \frac{k_\ell}{2^\ell}} = \exp\left[2\pi i \cdot \text{integer} + 2\pi i k_\ell \cdot 0.j_{n-\ell+1} \ldots j_n \right] = e^{2\pi i \cdot k_\ell \cdot 0.j_{n-\ell+1} \ldots j_n}$$

$\Longrightarrow$

$$\sum_{k_\ell=0}^{1} e^{2\pi i \cdot j \cdot \frac{k_\ell}{2^\ell}} |k_\ell\rangle = \sum_{k_\ell=0}^{1} e^{2\pi i \cdot k_\ell \cdot 0.j_{n-\ell+1} \ldots j_n} |k_\ell\rangle = |0\rangle + e^{2\pi i \cdot 0.j_{n-\ell+1} \ldots j_n} |1\rangle$$

- continue,

$$2 = \frac{1}{2^{n/2}} \bigotimes_{\ell=1}^{n} \left(|0\rangle + e^{2\pi i \cdot 0.j_{n-\ell+1} \ldots j_n} |1\rangle \right)$$

$$= \frac{\left(|0\rangle + e^{2\pi i \cdot 0.j_n} |1\rangle \right) \cdot \left(|0\rangle + e^{2\pi i \cdot 0.j_{n-1} j_n} |1\rangle \right) \cdots \left(|0\rangle + e^{2\pi i \cdot 0.j_1 \ldots j_n} |1\rangle \right)}{2^{n/2}}$$

$\Longrightarrow$ We are ready to present a quantum circuit implementing qFT:

- Introduce (up to an overall phase, R_k is a rotation by $\theta = \frac{2\pi}{2^k}$ about z-axis)

$$R_k \equiv \begin{bmatrix} 1 & 0 \\ 0 & e^{\frac{2\pi i}{2^k}} \end{bmatrix}, \qquad R_1 = Z\,, \qquad R_2 = S\,, \qquad R_3 \equiv T$$

- the circuit:

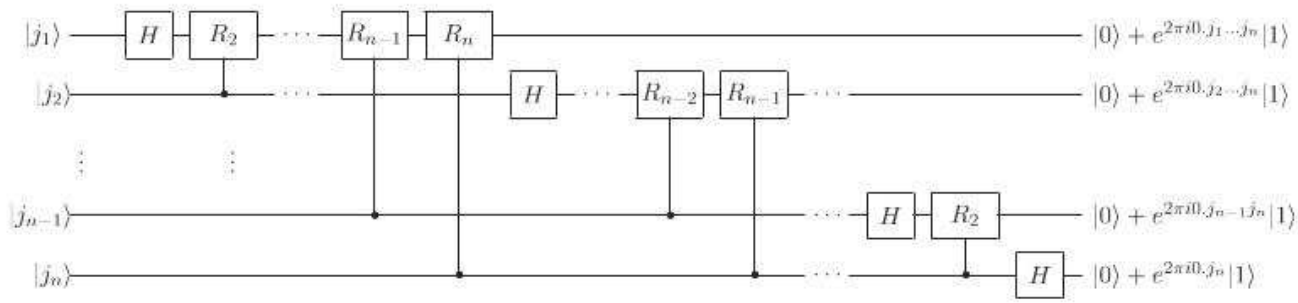

- let's follow $|j_1\rangle$:
  - $$H\,|j_1\rangle = \frac{|0\rangle + e^{2\pi i \cdot \frac{j_1}{2}}\,|1\rangle}{\sqrt{2}} = \frac{1}{2^{1/2}}\Big(|0\rangle + e^{2\pi i \cdot 0.j_1}\,|1\rangle\Big)$$
  - $$R_2 H\,|j_1\rangle = \frac{1}{2^{1/2}}\Big(R_2^{j_2}\,|0\rangle + e^{2\pi i \cdot 0.j_1} R_2^{j_2}\,|1\rangle\Big) = \frac{1}{2^{1/2}}\Big(|0\rangle + e^{2\pi i \cdot 0.j_1} \cdot e^{2\pi i \frac{j_2}{2^2}}\,|1\rangle\Big)$$
    $$= \frac{1}{2^{1/2}}\Big(|0\rangle + e^{2\pi i \cdot 0.j_1 j_2}\,|1\rangle\Big)$$
  - $$R_n \cdots R_2 H\,|j_1\rangle = \frac{1}{2^{1/2}}\Big(|0\rangle + e^{2\pi i \cdot 0.j_1 \ldots j_n}\,|1\rangle\Big)$$
- let's follow $|j_2\rangle$:
  $$R_{n-1} \cdots R_2 H\,|j_2\rangle = \frac{1}{2^{1/2}}\Big(|0\rangle + e^{2\pi i \cdot 0.j_2 \ldots j_n}\,|1\rangle\Big)$$
- finally, for $|j_n\rangle$:
  $$H\,|j_n\rangle = \frac{1}{2^{1/2}}\Big(|0\rangle + e^{2\pi i \cdot 0.j_n}\,|1\rangle\Big)$$
- the result of the quantum circuit is
  $$\frac{\Big(|0\rangle + e^{2\pi i \cdot 0.j_1 \ldots j_n}\,|1\rangle\Big) \cdot \Big(|0\rangle + e^{2\pi i \cdot 0.j_2 \ldots j_n}\,|1\rangle\Big) \cdots \Big(|0\rangle + e^{2\pi i \cdot 0.j_n}\,|1\rangle\Big)}{2^{n/2}}$$
  which differs from the *correct* qFT by a swapping all qubits

- Recall a simple circuit implementing the swap:

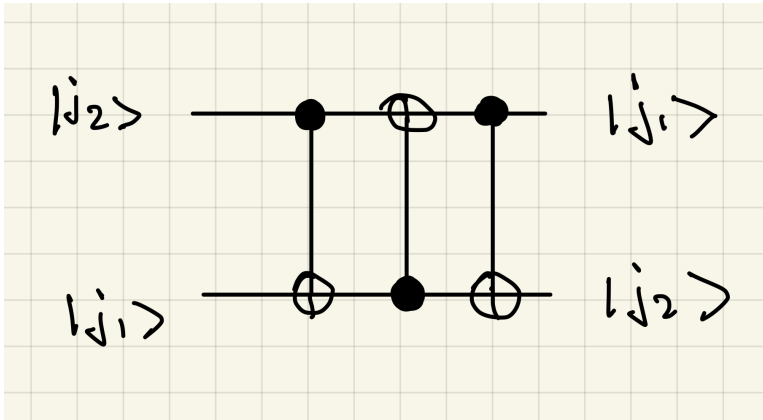

$$|j_2 j_1\rangle \longrightarrow |j_2(j_2 \oplus j_1)\rangle \longrightarrow |(j_2 \oplus j_1 \oplus j_2)(j_2 \oplus j_1)\rangle = |j_1(j_2 \oplus j_1)\rangle$$
$$\longrightarrow |j_1(j_2 \oplus j_1 \oplus j_1)\rangle = |j_1 j_2\rangle$$

- Here is a full circuit for $n = 3$:

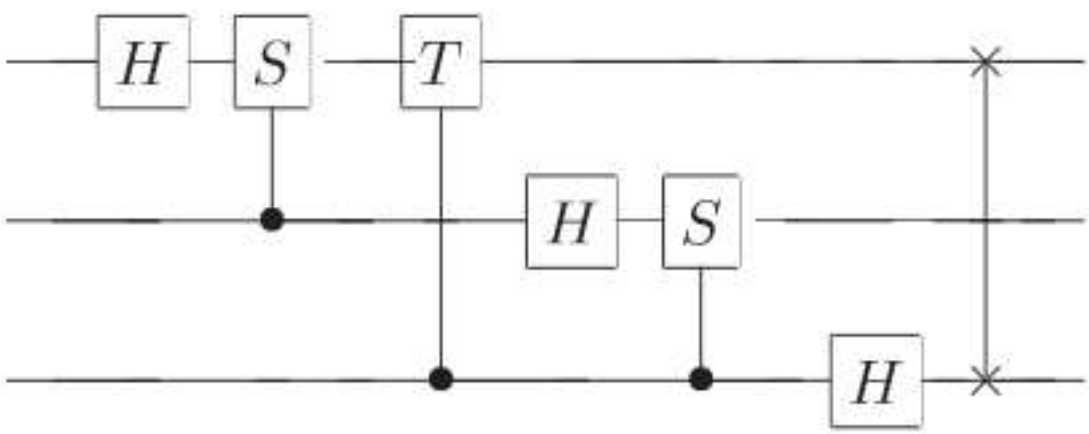

  - note that $S = R_2$, $T = R_3$
  - the last operation is a swap,

$$|k_3 k_2 k_1\rangle \xrightarrow{\text{swap } 1\leftrightarrow 3} |k_1 k_2 k_3\rangle$$

Phase estimation

$\Longrightarrow$ The task:

- You know a unitary U, and have a code that efficiently computes U^{2^j} for integer j
- You know that $|u\rangle$ is an eigenvector of U, and you can prepare this state

$$U\,|u\rangle = \lambda\,|u\rangle = e^{2\pi i\phi}\,|u\rangle\ ,$$

- You need to find ϕ to a requested precision

$$\phi = \frac{\phi_1}{2^1} + \frac{\phi_2}{2^2} + \cdots + \frac{\phi_\ell}{2^\ell} + \cdots$$

say, truncation at $\ell = n$:

$$\tilde{\phi} = \frac{\phi_1}{2^1} + \frac{\phi_2}{2^2} + \cdots + \frac{\phi_t}{2^t} \equiv 0.\phi_1 \ldots \phi_t\,, \qquad |\phi - \tilde{\phi}| \leq \frac{1}{2^t}$$

$\Longrightarrow$ The implementation:

- step 1:

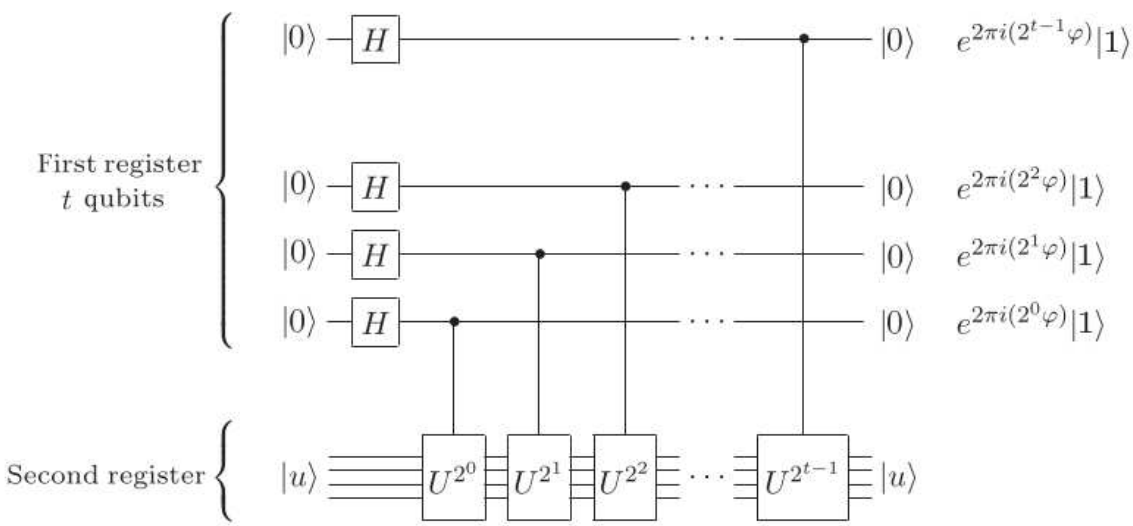

- the size of the *first register* $j_0 \dots j_{t-1}$ is determined by the requested precision of finding ϕ
- the size of the *second register* is what is needed to store $|u\rangle$
- let's follow $|j_{t-1}\rangle$ (the last register qubit):

$$H \otimes I\,|0u\rangle = \frac{|0\rangle + |1\rangle}{2^{1/2}} \otimes |u\rangle$$

$$V_{CU} \cdot (H \otimes I) \cdot |0u\rangle = V_{CU} \cdot \frac{|0u\rangle + |1u\rangle}{2^{1/2}} = \frac{1}{2^{1/2}}\Big(|0u\rangle + |1\rangle \otimes \underbrace{U^{2^0}\,|u\rangle}_{=\lambda^{2^0}|u\rangle}\Big)$$

$$= \frac{|0\rangle + e^{2\pi i(2^0\phi)}\,|1\rangle}{2^{1/2}} \otimes |u\rangle = \frac{|0\rangle + e^{2\pi i \cdot 0.\phi_1 \dots \phi_t}\,|1\rangle}{2^{1/2}} \otimes |u\rangle$$

- let's follow $|j_{t-2}\rangle$:

$$H \otimes I\,|0u\rangle = \frac{|0\rangle + |1\rangle}{2^{1/2}} \otimes |u\rangle$$

$$V_{CU^2} \cdot (H \otimes I) \cdot |0u\rangle = V_{CU^2} \cdot \frac{|0u\rangle + |1u\rangle}{2^{1/2}} = \frac{1}{2^{1/2}}\Big(|0u\rangle + |1\rangle \otimes \underbrace{U^{2^1}\,|u\rangle}_{=\lambda^{2^1}|u\rangle}\Big)$$

$$= \frac{|0\rangle + e^{2\pi i(2^1\phi)}\,|1\rangle}{2^{1/2}} \otimes |u\rangle = \frac{|0\rangle + e^{2\pi i \cdot 0.\phi_2 \dots \phi_t}\,|1\rangle}{2^{1/2}} \otimes |u\rangle$$

where we noted that

$$2^1 \cdot \phi = 2^1 \cdot \left(\frac{\phi_1}{2^1} + \frac{\phi_2}{2^2} + \dots + \frac{\phi_t}{2^t}\right) = \text{integer} + 0.\phi_2 \dots \phi_t$$

- finally $|j_0\rangle$ (the first register qubit):

$$H \otimes I\,|0u\rangle = \frac{|0\rangle + |1\rangle}{2^{1/2}} \otimes |u\rangle$$

$$V_{CU^{2^{t-1}}} \cdot (H \otimes I) \cdot |0u\rangle = V_{CU^{2^{t-1}}} \cdot \frac{|0u\rangle + |1u\rangle}{2^{1/2}} = \frac{1}{2^{1/2}}\Big(|0u\rangle + |1\rangle \otimes \underbrace{U^{2^{t-1}}\,|u\rangle}_{=\lambda^{2^{t-1}}|u\rangle}\Big)$$

$$= \frac{|0\rangle + e^{2\pi i(2^{t-1}\phi)}\,|1\rangle}{2^{1/2}} \otimes |u\rangle = \frac{|0\rangle + e^{2\pi i \cdot 0.\phi_t}\,|1\rangle}{2^{1/2}} \otimes |u\rangle$$

where we noted that

$$2^{t-1} \cdot \phi = 2^{t-1} \cdot \left(\frac{\phi_1}{2^1} + \frac{\phi_2}{2^2} + \dots + \frac{\phi_t}{2^t}\right) = \text{integer} + 0.\phi_t$$

- result of the quantum circuit:

$$\frac{\left(|0\rangle + e^{2\pi i \cdot 0.\phi_t}|1\rangle\right)\cdot\left(|0\rangle + e^{2\pi i \cdot 0.\phi_{t-1}\phi_t}|1\rangle\right)\cdots\left(|0\rangle + e^{2\pi i \cdot 0.\phi_1\ldots\phi_t}|1\rangle\right)}{2^{t/2}} \otimes |u\rangle$$

$$= U_{qFT}|\phi_1\ldots\phi_t\rangle \otimes |u\rangle = \frac{1}{2^{t/2}}\sum_{j=0}^{2^t-1} e^{2\pi i j\cdot\tilde{\phi}}|j\rangle \otimes |u\rangle$$

- step 2:
  - follow step 1 with application of the inverse-qFT, U^+_{qFT}, — which is achieved reversing the qFT quantum circuit:

$$(U^+_{qFT}\otimes I)\frac{1}{2^{t/2}}\sum_{j=0}^{2^t-1} e^{2\pi i j\cdot\tilde{\phi}}|j\rangle \otimes |u\rangle = (U^+_{qFT}\otimes I)\cdot U_{qFT}\left|\tilde{\phi}\right\rangle \otimes |u\rangle$$

$$= \underbrace{U^+_{qFT}U_{qFT}}_{=I_t}\left|\tilde{\phi}\right\rangle \otimes |u\rangle = \left|\tilde{\phi}\right\rangle \otimes |u\rangle$$

- step 3:
  - measurement of the first register in the computational basis, the result is:

$$\tilde{\phi}$$

which is within 2^{-t} accuracy to the true phase ϕ.
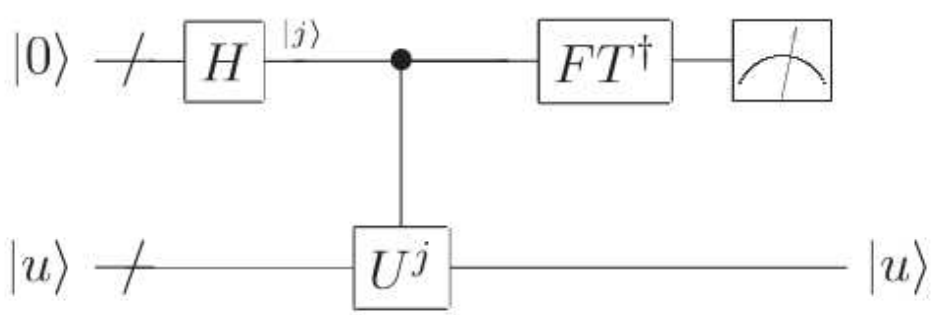
$\Longrightarrow$ the schematic of the full algorithm: