Lecture 9 (sections 4.2-4.4)

Elements of quantum circuits

$\Longrightarrow$ **Big picture:** We try to produce a *universal quantum computer* using small set of gates. Steps:

- show that arbitrary unitary operation on n-qubits can be expressed as product of unitaries acting only on 2 computational basis states (so called *two-level* gates)
- show that any two-level gate can be realized as a single qubit gate plus a 2-qubit CNOT gate
- any single qubit gate can be approximates to arbitrary precision with Hadamard and $\pi/8$ gate

$\Longrightarrow$ **universal set of gates:** H,T, and CNOT

$\Longrightarrow$ **Single qubit operations**

Recall:

- a single qubit representation:

$$|\psi\rangle = a|0\rangle + b|1\rangle \;=\; \begin{bmatrix} a \\ b \end{bmatrix}, \qquad |a|^2 + |b|^2 = 1$$

$\Longrightarrow$

$$\left\{ a = \cos\frac{\theta}{2}\,,\; b = e^{i\phi}\sin\frac{\theta}{2} \right\} \qquad \Longleftrightarrow \qquad \vec{n} = \underbrace{(\theta, \phi)}_{\text{spehrical coordinates}}$$

$$= \underbrace{(n_x = \sin\theta\cos\phi, n_y = \sin\theta\sin\phi, n_z = \cos\theta)}_{\text{Cartesian coordinates}}$$

where $\vec{n}$ is a unit vector corresponding to $|\psi\rangle$ on a Bloch sphere

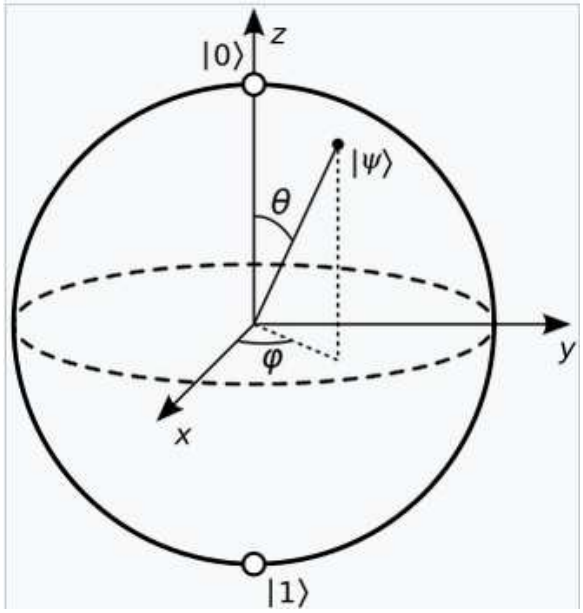

- Let $\vec{n} \leftrightarrow |\psi\rangle$; what state corresponds to $-\vec{n}$?

■

$$-\vec{n} = (\pi - \theta, \phi + \pi) \iff |\chi\rangle \equiv \begin{bmatrix} \hat{a} \\ \hat{b} \end{bmatrix}$$

$$-\vec{n} \iff \left\{ \hat{a} = \cos\frac{\pi - \theta}{2}, \hat{b} = e^{i(\phi+\pi)\sin\frac{\pi-\theta}{2}} \right\} = \left\{ \sin\frac{\theta}{2}, -e^{i\phi}\cos\frac{\theta}{2} \right\}$$

$\Longrightarrow$

$$\langle\chi|\psi\rangle = 0$$

i.e., states corresponding to opposite vectors on Bloch sphere are *always* orthogonal to each other

- Operations on a single qubit are unitary 2×2 matrices:

$$U = \begin{bmatrix} a & b \\ c & d \end{bmatrix}, \qquad U \cdot U^{+} = \begin{bmatrix} a & b \\ c & d \end{bmatrix} \cdot \begin{bmatrix} a^* & c^* \\ b^* & d^* \end{bmatrix} = \begin{bmatrix} 1 & 0 \\ 0 & 1 \end{bmatrix}$$

$\Longrightarrow$ arbitrary 2×2 unitary matrix is characterized by 4 complex (8 real parameters), subject to 4 real constraints, coming from $UU^{+} = I_2$,

$$\begin{cases} |a|^2 + |b|^2 = 1 & \longrightarrow 1 \text{ real constraint} \\ ac^* + bd^* = 0 + i \cdot 0 & \longrightarrow 1 \text{ complex constraint} \\ |c|^2 + |d|^2 = 1 & \longrightarrow 1 \text{ real constraint} \end{cases}$$

i.e., we are left with $8 - 4 = 4$ arbitrary parameters describing a single qubit unitary.

- Examples of single qubit quantum gates (unitaries):

Hadamard	$-\boxed{H}-$	$\frac{1}{\sqrt{2}}\begin{bmatrix} 1 & 1 \\ 1 & -1 \end{bmatrix}$
Pauli-X	$-\boxed{X}-$	$\begin{bmatrix} 0 & 1 \\ 1 & 0 \end{bmatrix}$
Pauli-Y	$-\boxed{Y}-$	$\begin{bmatrix} 0 & -i \\ i & 0 \end{bmatrix}$
Pauli-Z	$-\boxed{Z}-$	$\begin{bmatrix} 1 & 0 \\ 0 & -1 \end{bmatrix}$
Phase	$-\boxed{S}-$	$\begin{bmatrix} 1 & 0 \\ 0 & i \end{bmatrix}$
$\pi/8$	$-\boxed{T}$	$\begin{bmatrix} 1 & 0 \\ 0 & e^{i\pi/4} \end{bmatrix}$

- All the gates are defined up to and arbitrary phase, *i.e.,* the gates U and $V \equiv e^{i\alpha}U$ are equivalent

$$U \sim V$$

- Algebraic relations among the gates:

$$H = \frac{X+Z}{\sqrt{2}}\,, \qquad S = T^2\,, \qquad Z = S^2$$

- Qubit <u>*rotation operators*</u> on the Bloch sphere about $\hat{x}, \hat{y}, \hat{z}$ axis by angle θ:

$$R_x(\theta) \equiv e^{-i\theta X/2} = \cos\frac{\theta}{2}\, I_2 - i\sin\frac{\theta}{2}\, X = \begin{bmatrix} \cos\frac{\theta}{2} & -i\sin\frac{\theta}{2} \\ -i\sin\frac{\theta}{2} & \cos\frac{\theta}{2} \end{bmatrix}$$

$$R_y(\theta) \equiv e^{-i\theta Y/2} = \cos\frac{\theta}{2}\, I_2 - i\sin\frac{\theta}{2}\, Y = \begin{bmatrix} \cos\frac{\theta}{2} & -\sin\frac{\theta}{2} \\ \sin\frac{\theta}{2} & \cos\frac{\theta}{2} \end{bmatrix}$$

$$R_z(\theta) \equiv e^{-i\theta X/2} = \cos\frac{\theta}{2}\, I_2 - i\sin\frac{\theta}{2}\, Z = \begin{bmatrix} e^{-i\theta/2} & 0 \\ 0 & e^{i\theta/2} \end{bmatrix}$$

where in the second equality we used result from Lecture 3:

$$e^{i\theta\ \vec{v}\cdot\vec{\sigma}} = e^{i\theta(v_x\cdot X + v_y\cdot Y + v_z\cdot Z)} = \cos\theta\ I_2 + i\sin\theta\ \vec{v}\cdot\vec{\sigma}$$

- Note that:

$$S \ \sim\ R_z\,(\pi/2)\ , \qquad T\ \sim\ R_z\,(\pi/4)$$

- Why?

$\Longrightarrow$ Consider $|i\rangle = |0\rangle$, then

$$|f\rangle \equiv R_x(\alpha)\,|i\rangle = \begin{bmatrix} \cos\frac{\alpha}{2} & -i\sin\frac{\alpha}{2} \\ -i\sin\frac{\alpha}{2} & \cos\frac{\alpha}{2} \end{bmatrix} \cdot \begin{bmatrix} 1 \\ 0 \end{bmatrix} = \begin{bmatrix} \cos\frac{\alpha}{2} \\ -i\sin\frac{\alpha}{2} \end{bmatrix} = \begin{bmatrix} \cos\frac{\alpha}{2} \\ e^{-i\pi/2}\sin\frac{\alpha}{2} \end{bmatrix}$$

$$\vec{n}_f = \left(\alpha, -\frac{\pi}{2}\right)$$

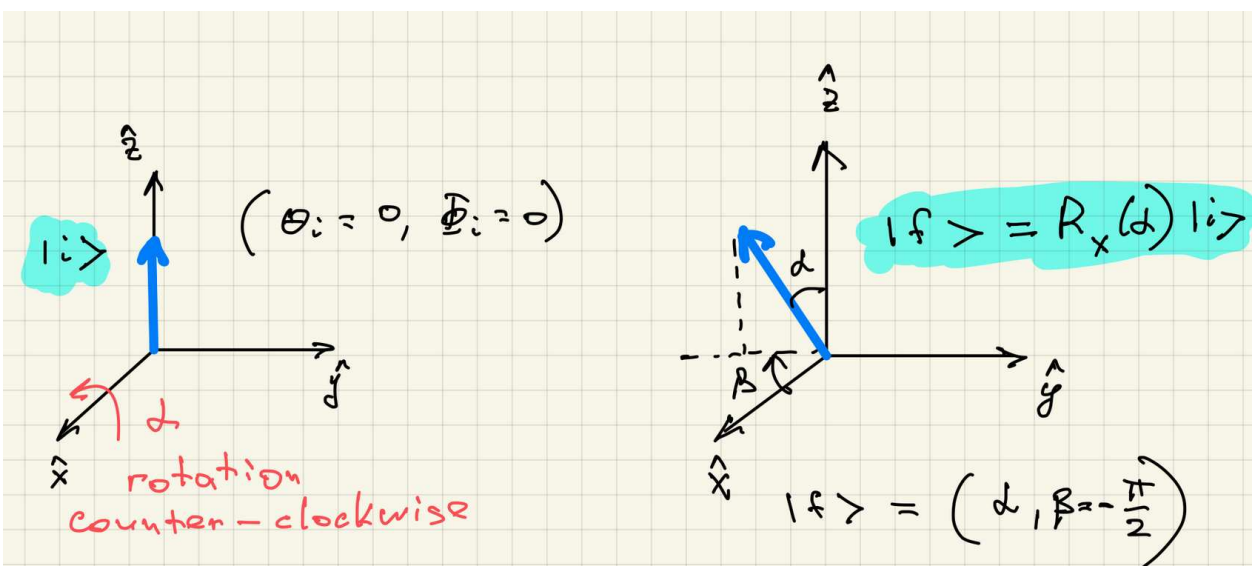

- 3 theorems for a representation of an arbitrary single qubit gate:

- **Theorem-I:** U can be realized as a rotation about a unit vector $\vec{n}$:

$$U = e^{i\alpha} \cdot R_{\vec{n}}(\theta)$$

  - number of parameters: 1 (α) + 1 (θ) + 2 (spherical coordinates of $\vec{n}$) =4
  - U has a nice spectral decomposition:

$$U = e^{i(\alpha-\theta/2)} \left|\vec{n}\right\rangle \left\langle\vec{n}\right| + e^{i(\alpha+\theta/2)} \left|-\vec{n}\right\rangle \left\langle-\vec{n}\right|$$

- **Theorem-II:** U can be realized as $Z - Y$ decomposition:

$$U = e^{i\alpha} \cdot R_z(\beta) \cdot R_y(\gamma) \cdot R_z(\delta) = \begin{bmatrix} e^{i(\alpha-\beta/2-\delta/2)} \cos\frac{\gamma}{2} & -e^{i(\alpha-\beta/2+\delta/2)} \sin\frac{\gamma}{2} \\ e^{i(\alpha+\beta/2-\delta/2)} \sin\frac{\gamma}{2} & e^{i(\alpha+\beta/2+\delta/2)} \cos\frac{\gamma}{2} \end{bmatrix}$$

  i.e., any rotation can be decomposed as a sequence of 3 rotations about 2 orthogonal axes
  - number of parameters 4 (3 rotation angles and a phase α)
- **Theorem-III:** Let $\hat{m}$ and $\hat{n}$ are any 2 fixed non-parallel ($\hat{m} \times \hat{n} \neq \vec{0}$) real unit vectors, $\Longrightarrow$

$$U = e^{i\alpha} \cdot R_{\hat{n}}(\beta) \cdot R_{\hat{m}}(\gamma) \cdot R_{\hat{n}}(\delta)$$

  - Note that theorem II is a special case of theorem III, with $\hat{n} = z$ and $\hat{m} = y$

$\Longrightarrow$ **IMPORTANT!!!** Suppose U is a single qubit gate. Then, there exists operators (*i.e.,* unitaries) A, B, C such that

$$ABC = I_2\,, \qquad U = e^{i\alpha} AXBXC$$

<u>*Proof:*</u>

- According to Theorem II,

$$U = e^{i\alpha} \cdot R_z(\beta) \cdot R_y(\gamma) \cdot R_z(\delta)$$

- Define

$$A \equiv R_z(\beta) \cdot R_y(\gamma/2)\,, \qquad B \equiv R_y(-\gamma/2) \cdot R_z(-\delta/2 - \beta/2)\,, \qquad C \equiv R_z(\delta/2 - \beta/2)$$

$\Longrightarrow$

$$ABC = R_z(\beta) \cdot \underbrace{R_y(\gamma/2) \cdot R_y(-\gamma/2)}_{=R_y(\gamma/2-\gamma/2)=I_2} \cdot R_z(-\delta/2 - \beta/2) \cdot R_z(\delta/2 - \beta/2)$$

$$= R_z(\beta - \delta/2 - \beta/2 + \delta/2 - \beta/2) = R_z(0) = I_2$$

- Let's compute

$$XBX = XR_y(-\gamma/2) \cdot \underbrace{X \cdot X}_{\text{since } X^2=I_2} \cdot R_z(-\delta/2-\beta/2) \cdot X = \Big(XR_y(-\gamma/2) \cdot X\Big) \cdot \Big(X \cdot R_z(-\delta/2-\beta/2) \cdot X\Big)$$

  - For any angle θ,

$$XR_y(\theta)X = X\left(\cos\frac{\theta}{2}I_2 - i\sin\frac{\theta}{2}Y\right)X = \cos\frac{\theta}{2} \cdot \underbrace{XI_2X}_{=X^2=I_2} - i\sin\frac{\theta}{2} \cdot \underbrace{XYX}_{=iZX=i\cdot iY=-Y}$$

$$= \cos\frac{\theta}{2}I_2 + i\sin\frac{\theta}{2}Y = R_y(-\theta)$$

  - likewise,

$$XR_z(\theta)X = X\left(\cos\frac{\theta}{2}I_2 - i\sin\frac{\theta}{2}Z\right)X = \cos\frac{\theta}{2} \cdot \underbrace{XI_2X}_{=X^2=I_2} - i\sin\frac{\theta}{2} \cdot \underbrace{XZX}_{=-iYX=(-i)\cdot(-iZ)=-Z}$$

$$= \cos\frac{\theta}{2}I_2 + i\sin\frac{\theta}{2}Y = R_z(-\theta)$$

$\Longrightarrow$

$$XBX = R_y(\gamma/2) \cdot R_z(\delta/2 + \beta/2)$$

$\Longrightarrow$

$$A \cdot XBX \cdot C = \underbrace{R_z(\beta)R_y(\gamma/2)}_{A} \cdot \underbrace{R_y(\gamma/2) \cdot R_z(\delta/2 + \beta/2)}_{XBX} \cdot \underbrace{R_z(\delta/2 - \beta/2)}_{C}$$

$$= R_z(\beta) \cdot R_y(\gamma/2 + \gamma/2) \cdot R_z(\delta/2 + \beta/2 + \delta/2 - \beta/2) = R_z(\beta) \cdot R_y(\gamma) \cdot R_z(\delta)$$

$\Longrightarrow$ **<u>Controlled operations</u>**

Here and below $|c\rangle$ stands for *control* qubit; $|t\rangle$ stands for *target* qubit

- CNOT operation:

$$|c\rangle\,|t\rangle \xrightarrow{CNOT} |c\rangle\,|t \oplus c\rangle$$

e.g.,

$$|00\rangle \to |00\rangle = \begin{bmatrix}1\\0\\0\\0\end{bmatrix},\ |01\rangle \to |01\rangle = \begin{bmatrix}0\\1\\0\\0\end{bmatrix},\ |10\rangle \to |11\rangle = \begin{bmatrix}0\\0\\0\\1\end{bmatrix},\ |11\rangle \to |10\rangle = \begin{bmatrix}0\\0\\1\\0\end{bmatrix}$$

$\Longrightarrow$

$$U_{CN} = I \otimes X^c = \begin{cases} I \otimes X\,, & c = 1 \\ I \otimes I\,, & c = 0 \end{cases}, \qquad U_{CN} = \begin{bmatrix}1 & 0 & 0 & 0\\0 & 1 & 0 & 0\\0 & 0 & 0 & 1\\0 & 0 & 1 & 0\end{bmatrix}$$

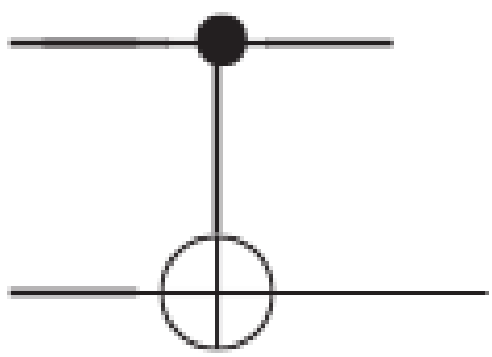

- Controlled-U operation:

$$|c\rangle\,|t\rangle \xrightarrow{CU} |c\rangle\,U^c\,|t\rangle$$

$$U_{CU} = I \otimes U^c = \begin{cases} I \otimes U\,, & c = 1 \\ I \otimes I\,, & c = 0 \end{cases}$$

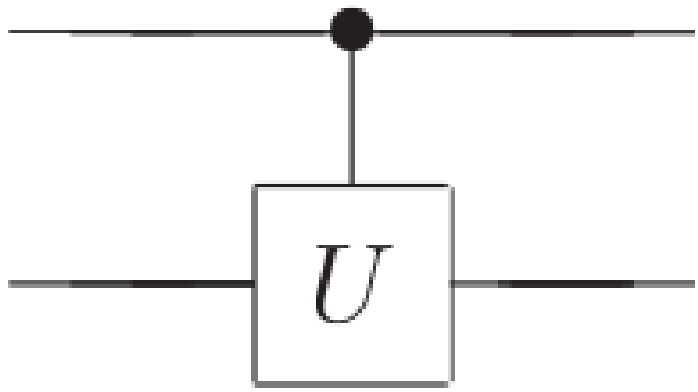

- The role of control and the target bit can be *flipped*:

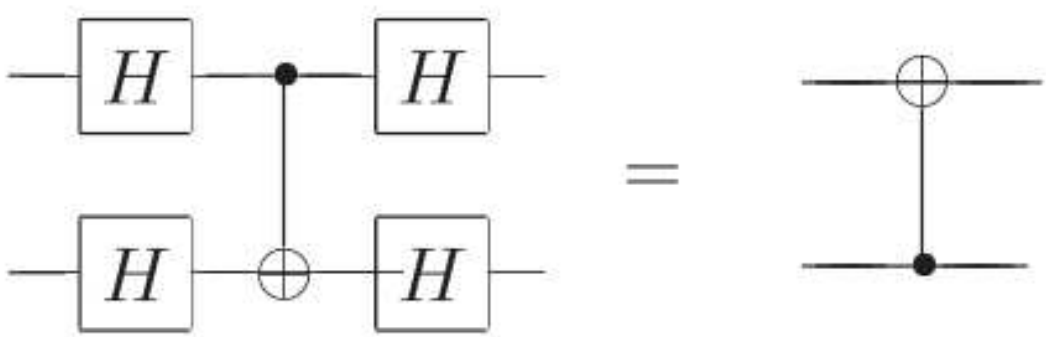

$\Longrightarrow$ Let's verify this:

- The quantum circuit on the left is:

$$LHS: \qquad H^{\otimes 2} \cdot U_{CN} \cdot H^{\otimes 2}$$

Recall:

$$H^{\otimes 2} = \begin{bmatrix} \frac{1}{\sqrt{2}} \cdot H & \frac{1}{\sqrt{2}} \cdot H \\ \frac{1}{\sqrt{2}} \cdot H & -\frac{1}{\sqrt{2}} \cdot H \end{bmatrix}$$

$\Longrightarrow$

$$LHS: \quad \underbrace{\begin{bmatrix} \frac{1}{2} & \frac{1}{2} & \frac{1}{2} & \frac{1}{2} \\ \frac{1}{2} & -\frac{1}{2} & \frac{1}{2} & -\frac{1}{2} \\ \frac{1}{2} & \frac{1}{2} & -\frac{1}{2} & -\frac{1}{2} \\ \frac{1}{2} & -\frac{1}{2} & -\frac{1}{2} & \frac{1}{2} \end{bmatrix}}_{H^{\otimes 2}} \cdot \underbrace{\begin{bmatrix} 1 & 0 & 0 & 0 \\ 0 & 1 & 0 & 0 \\ 0 & 0 & 0 & 1 \\ 0 & 0 & 1 & 0 \end{bmatrix}}_{U_{CN}} \cdot \underbrace{\begin{bmatrix} \frac{1}{2} & \frac{1}{2} & \frac{1}{2} & \frac{1}{2} \\ \frac{1}{2} & -\frac{1}{2} & \frac{1}{2} & -\frac{1}{2} \\ \frac{1}{2} & \frac{1}{2} & -\frac{1}{2} & -\frac{1}{2} \\ \frac{1}{2} & -\frac{1}{2} & -\frac{1}{2} & \frac{1}{2} \end{bmatrix}}_{H^{\otimes 2}} = \begin{bmatrix} 1 & 0 & 0 & 0 \\ 0 & 0 & 0 & 1 \\ 0 & 0 & 1 & 0 \\ 0 & 1 & 0 & 0 \end{bmatrix}$$

- The quantum circuit on the right is:

$$|c\rangle\,|t\rangle \;\rightarrow\; |c \oplus t\rangle\,|t\rangle$$

e.g.,

$$|00\rangle \rightarrow |00\rangle = \begin{bmatrix} 1 \\ 0 \\ 0 \\ 0 \end{bmatrix}, \; |01\rangle \rightarrow |11\rangle = \begin{bmatrix} 0 \\ 0 \\ 0 \\ 1 \end{bmatrix}, \; |10\rangle \rightarrow |10\rangle = \begin{bmatrix} 0 \\ 0 \\ 1 \\ 0 \end{bmatrix}, \; |11\rangle \rightarrow |01\rangle = \begin{bmatrix} 0 \\ 1 \\ 0 \\ 0 \end{bmatrix}$$

$\Longrightarrow$

$$RHS: \quad \begin{bmatrix} 1 & 0 & 0 & 0 \\ 0 & 0 & 0 & 1 \\ 0 & 0 & 1 & 0 \\ 0 & 1 & 0 & 0 \end{bmatrix}$$

Construction of $C^n(U)$ using only single qubit and CNOT gates

Def: $C^n(U)$ operation acts on $n+1$ qubits, the first n being control, the last is target, as:

$$C^n(U) \; \underbrace{|x_1 x_2 \cdots x_n\rangle}_{\text{control}} |\psi\rangle = |x_1 x_2 \cdots x_n\rangle \, U^{x_1 x_2 \cdots x_n} |\psi\rangle$$

i.e., the unitary acts on the target only if the product of all control bits it 1 (same as all $x_i = 1$)

$\Longrightarrow$ Begin with $C^1(U)$:

$$C^1(U)\,|ct\rangle = |c\rangle\, U^c\,|t\rangle$$

- Recall any U is represented as

$$U = e^{i\alpha} AXBXC\,, \qquad ABC = I$$

- There is a useful rewriting of controlled-phase operation $C^1(U_\alpha)$, where $U_\alpha \equiv e^{i\alpha}$:

$$C^1(U_\alpha)\,|ct\rangle = |c\rangle\, U_\alpha^c\,|t\rangle = |c\rangle\, e^{i\alpha c}\,|t\rangle = (e^{i\alpha c}\,|c\rangle)\,|t\rangle$$

since

$$e^{i\alpha c}\,|c\rangle = |c\rangle \cdot \begin{cases} 1\,, & c = 0 \\ e^{i\alpha}\,, & c = 1 \end{cases} \qquad \Longleftrightarrow \qquad \begin{bmatrix} 1 & 0 \\ 0 & e^{i\alpha} \end{bmatrix} |c\rangle$$

we have a circuit identity:

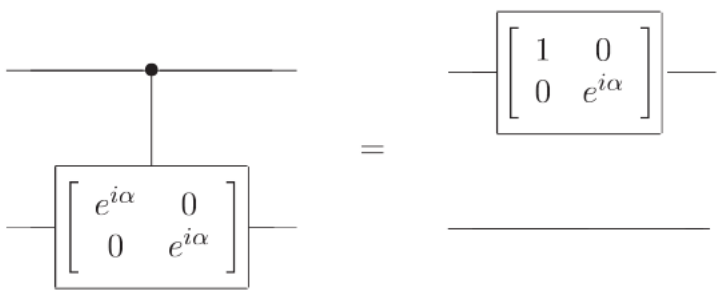

- Let's verify that this circuit correctly implements $C^1(U)$:

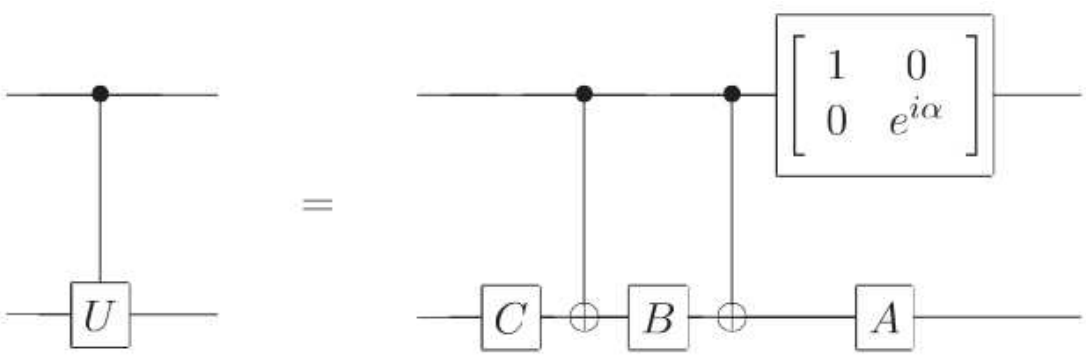

  - assume that $|c\rangle = |1\rangle$:

$$C^1(U)\,|c\rangle = \begin{bmatrix} 1 & 0 \\ 0 & e^{i\alpha} \end{bmatrix} \cdot \begin{bmatrix} 0 \\ 1 \end{bmatrix} = e^{i\alpha}\,|1\rangle$$

$$C^1(U)\,|t\rangle = A\cdot X^1\cdot B\cdot X^1\cdot C\,|t\rangle = AXBXC\,|t\rangle$$

$\Longrightarrow$

$$C^1(U)\,|1t\rangle = e^{i\alpha}\,|1\rangle\,AXBXC\,|t\rangle = |1\rangle\,\underbrace{e^{i\alpha}AXBXC}_{U}\,|t\rangle = |1\rangle\,U\,|t\rangle$$

- assume that $|c\rangle = |0\rangle$:

$$C^1(U)\,|c\rangle = \begin{bmatrix}1 & 0\\ 0 & e^{i\alpha}\end{bmatrix}\cdot\begin{bmatrix}1\\ 0\end{bmatrix} = |0\rangle$$

$$C^1(U)\,|t\rangle = A\cdot X^0\cdot B\cdot X^0\cdot C\,|t\rangle = ABC\,|t\rangle$$

$\Longrightarrow$

$$C^1(U)\,|0t\rangle = |0\rangle\,\underbrace{ABC}_{I}\,|t\rangle = |0\rangle\,|t\rangle$$

$\Longrightarrow$ <u>Continue with $C^2(U)$</u>:

- the action:

$$|c_1c_2t\rangle \xrightarrow{C^2(U)} |c_1c_2\rangle\,U^{c_1\dot{c}_2}\,|t\rangle$$

- Any 2×2 unitary allows for a spectral decomposition with orthonormal set $\{|u\rangle_i\}$:

$$U = e^{i\alpha_1}\cdot|u_1\rangle\langle u_1| + e^{i\alpha_2}\cdot|u_2\rangle\langle u_2|\ , \qquad I = \sum_i |u_i\rangle\langle u_i|$$

- We can define a unitary V,

$$V \equiv e^{i\alpha_1/2}\cdot|u_1\rangle\langle u_1| + e^{i\alpha_2/2}\cdot|u_2\rangle\langle u_2|\ , \qquad V^2 = U\,, \qquad VV^+ = V^+V = I$$

- We now verify that the quantum circuit

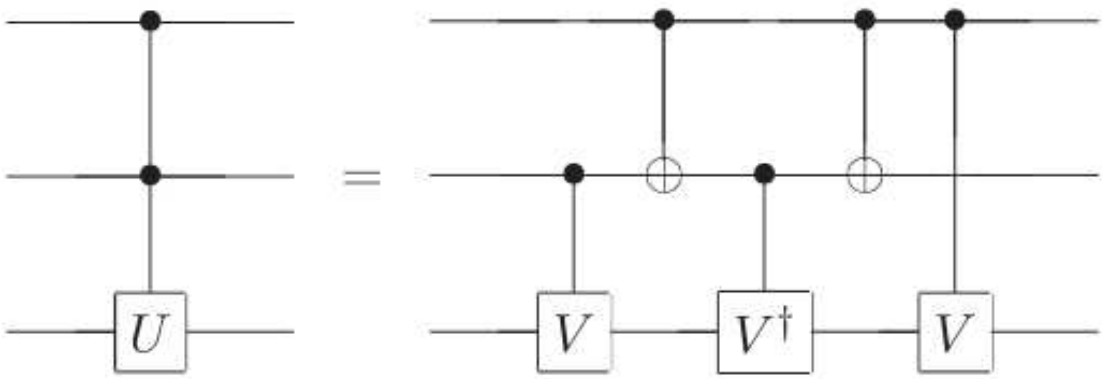

implements $C^2(U)$.

Lets evaluate the RHS for different inputs:

- $c_1 = c_2 = 1$,

$$RHS\ \ |c_1\rangle = |1\rangle = |1\rangle$$

$$RHS\,|c_2\rangle = RHS\,|1\rangle : \qquad |1\rangle \to X^{c_1}\,|1\rangle = |0\rangle \to X^{c_1}\,|0\rangle = |1\rangle$$

$$RHS\,|t\rangle : \qquad |t\rangle \ \to V^{c_2}\,|t\rangle = V\,|t\rangle \to (V^+)^0 V\,|t\rangle = V\,|t\rangle \to (V^{c_1})V\,|t\rangle = V^2\,|t\rangle = U\,|t\rangle$$

- If $c_1 \cdot c_2 \neq 1$, the circuit evaluates to the input, *e.g.*, $c_1 = 1\,, c_2 = 0$:

$$RHS\,|c_1\rangle = RHS\,|1\rangle = |1\rangle$$

$$RHS\,|c_2\rangle = RHS\,|0\rangle : \qquad |0\rangle \to |1\rangle \to |0\rangle$$

$$RHS\,|t\rangle : \qquad |t\rangle \to |t\rangle \to V^+\,|t\rangle \to VV^+\,|t\rangle = |t\rangle$$

- Note that the Toffoli gate is nothing but $C^2(X)$:

■

$$X = (|+\rangle\langle+| - |-\rangle\langle-|) = e^{i0}(|+\rangle\langle+| + e^{-\pi}(|-\rangle\langle-|) \implies V = e^{i0/2}(|+\rangle\langle+|) + e^{-i\pi/2}(|-\rangle\langle-|)$$

$\implies$

$$V_{Toffoli} = (|+\rangle\langle+|) - i(|-\rangle\langle-|)$$

■ From

$$X = (|+\rangle\langle+|) - (|-\rangle\langle-|) \qquad \text{and} \qquad I = X = (|+\rangle\langle+|) + (|-\rangle\langle-|)$$

$\implies$

$$|+\rangle\langle+| = \frac{1}{2}(I + X)\,, \qquad |-\rangle\langle-| = \frac{1}{2}(I - X)$$

$\implies$

$$V_{Tofolli} = \frac{1}{2}(I + X) - \frac{i}{2}(I - X) = \frac{1 - i}{2} \cdot (I + iX)$$

$\implies$ <u>Circuit for $C^5(U)$ that can generalizes to $C^n(U)$</u>:

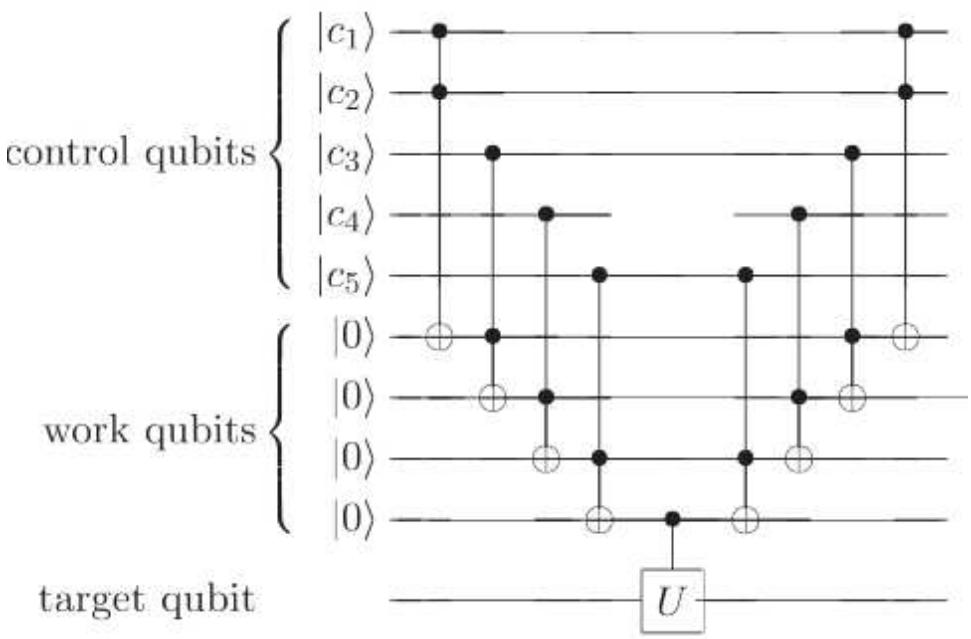

- Each Toffoli or controlled-U gate can be replaced with CNOT and single-qubit gates as explained above

- Note that each control qubit is never changed
- Note that on each work-qubit the same Toffoli gate acts twice, thus it is returned back to $|0\rangle$
- Note that

  $$|w_1\rangle = |c_1 \cdot c_2\rangle \ , \qquad |w_2\rangle = |c_3 \cdot w_1\rangle = |c_1 \cdot c_2 \cdot c_3\rangle \ , \qquad \cdots \ , \qquad |w_4\rangle = |c_5 \cdot w_3\rangle = |c_1 \cdots c_5\rangle$$

  $\Longrightarrow$ the action on $|t\rangle$:

  $$|t\rangle \to U^{w_4} |t\rangle = U^{c_1 \cdot c_2 \cdot c_3 \cdot c_4 \cdot c_5} |t\rangle$$

  precisely as needed

$\Longrightarrow$ It was claimed that any gate can be approximated (with arbitrary precision) by H, T and $CNOT$ gates.

- Toffoli gate can be realized exactly:

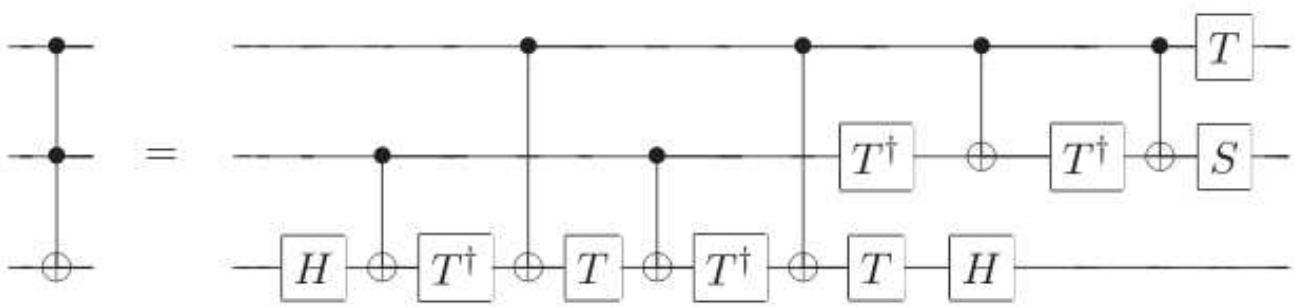

where $S = T^2$

$\Longrightarrow$ **<u>Measurement</u>**

Classical conditioned operations can be replaced by quantum conditioned operations (*e.g.,* conditioning on $|0\rangle$ can still be done using only CNOT gates)

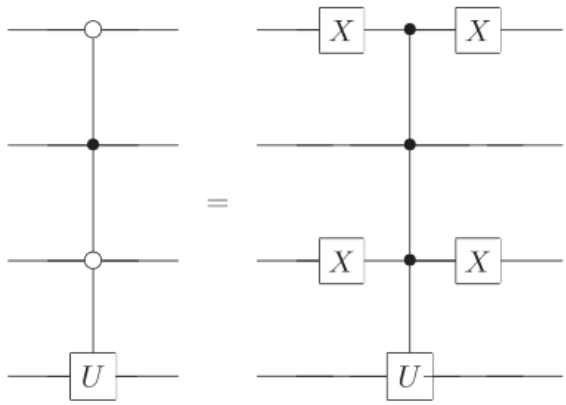

or

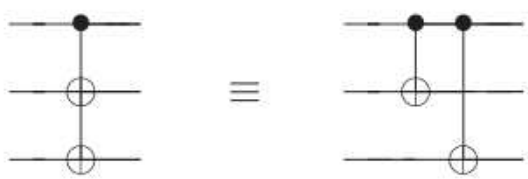

$\Longrightarrow$ Two principles of measurement:

- **Principle of deferred measurement:** Intermediate measurement can always be moved *to the end* of the circuit
  - <u>old</u> quantum teleportation algorithm (with intermediate measurements):

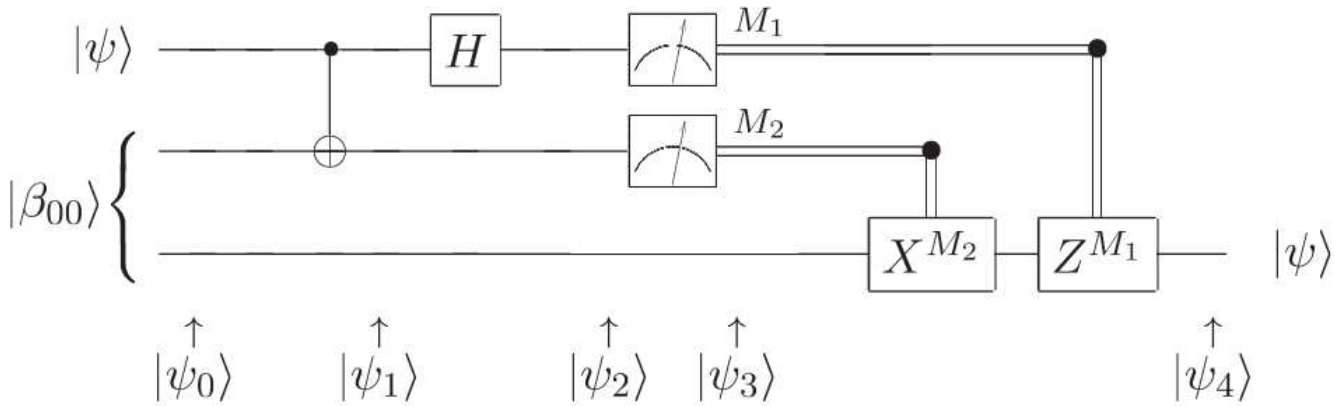

  - <u>new</u> quantum teleportation algorithm (with measurements *at the end*):

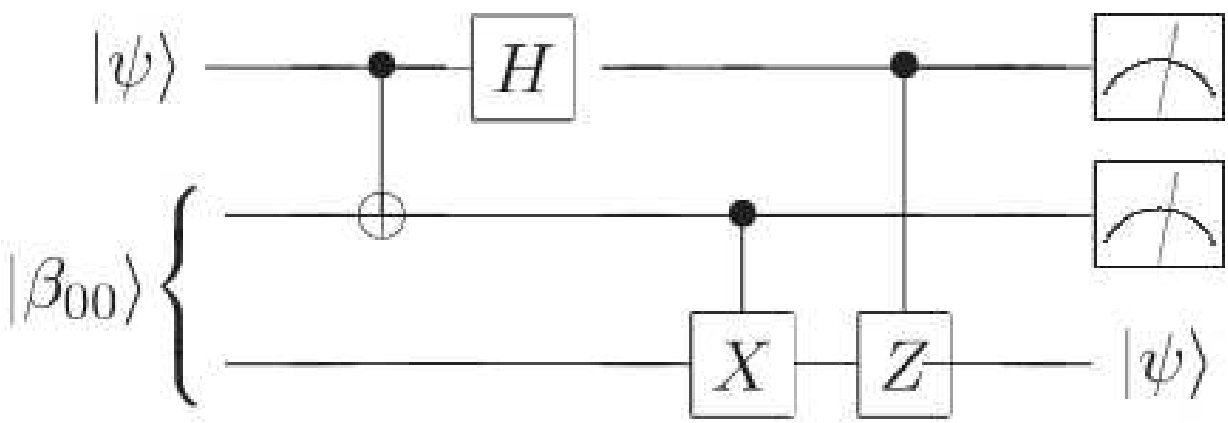

- **Principle of implicit measurement:** any unterminated quantum wires are assumed to be measured