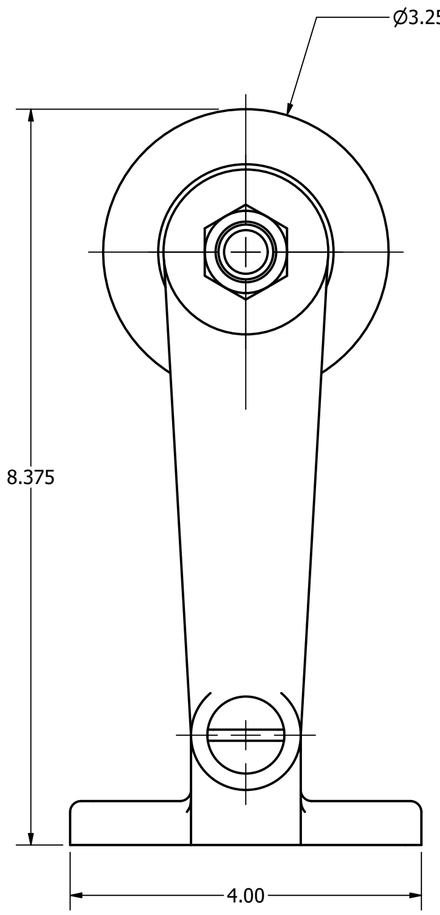

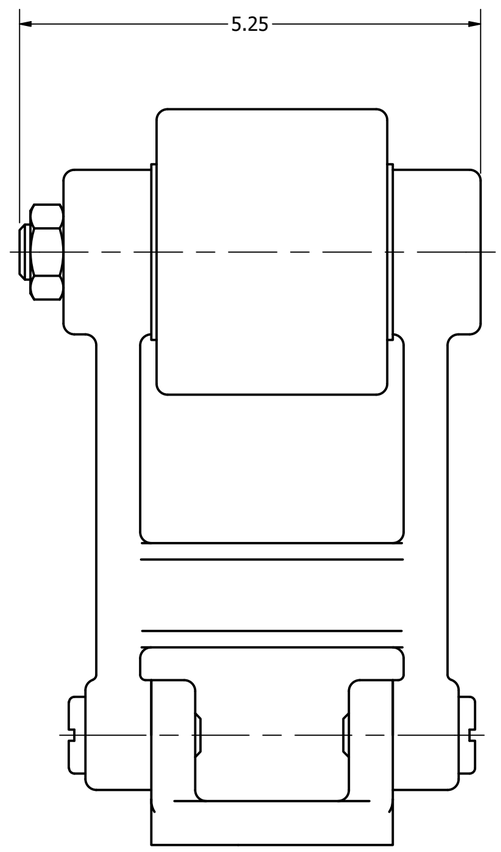

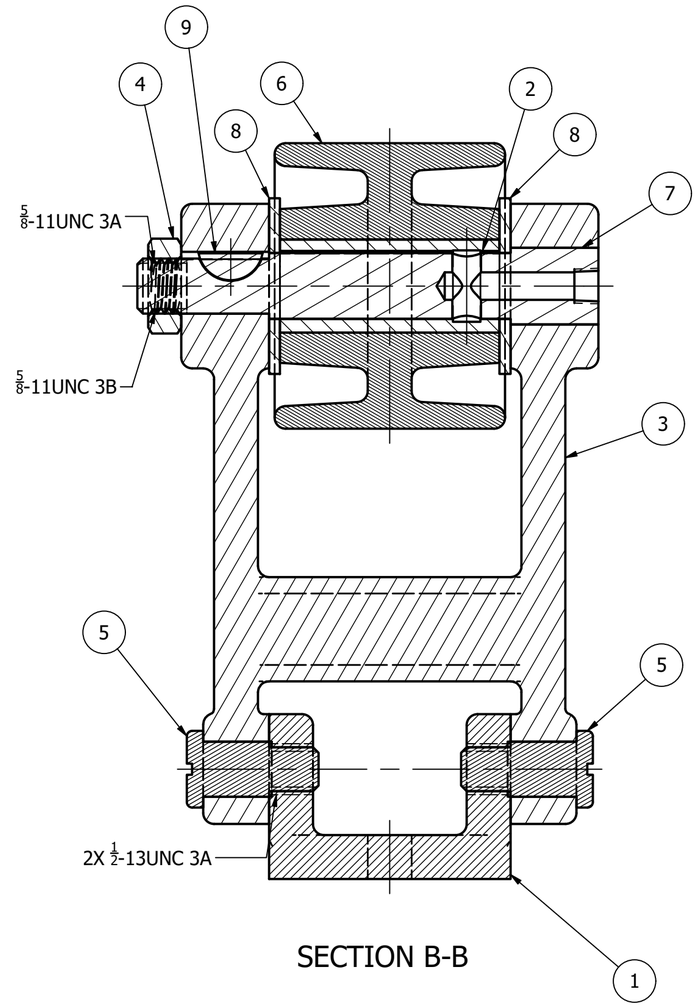

SECTION B-B

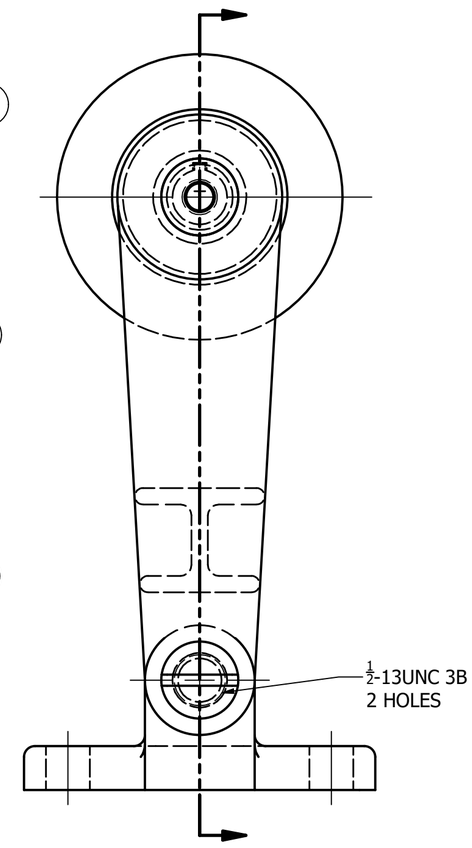

B

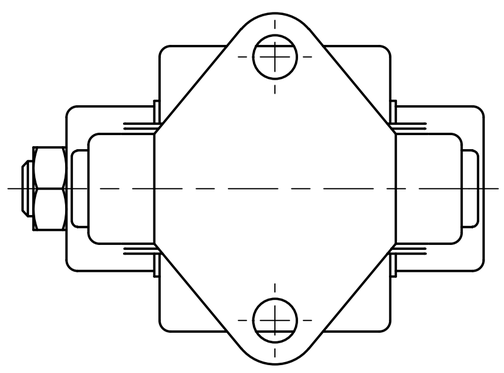

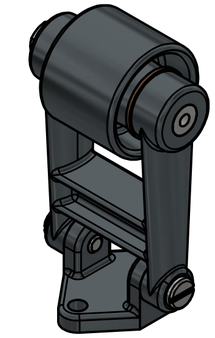

PARTS LIST

ITEM	QTY	PART NUMBER	APPEARANCE	MATERIAL	TITLE
1	1	265-A-22176-04	IRON GRAY	IRON, CAST	BRACKET
2	1	265-A-22176-05	BRONZE - SATIN	BRONZE, SOFT TIN	BUSHING
3	1	265-A-22176-01	IRON GRAY	IRON, CAST	FRAME
4	1	265-S-22176-03	SEMI-POLISHED	STEEL, MILD	5/8-11 UNC HEX NUT
5	2	265-A-22176-03	SEMI-POLISHED	STEEL, MILD	1/2-13UNC-3A PIN
6	1	265-A-22176-06	IRON GRAY	IRON, CAST	PULLEY
7	1	265-A-22176-02	SEMI-POLISHED	STEEL, MILD	SHAFT
8	2	265-S-22176-01	BRONZE - SATIN	BRONZE, SOFT TIN	WASHER
9	1	265-S-22176-02	STEEL	STEEL	#406 WOODRUFF KEY

UNLESS OTHERWISE SPECIFIED:

DIMENSIONS ARE IN INCHES
TOLERANCES:
FRACTIONAL ±1/32"
ANGULAR ±2°
.XX: ±.01
.XXX ±.004

DO NOT SCALE DRAWING

PORTLAND COMMUNITY COLLEGE

TITLE

BELT TIGHTENER ASSEMBLY

DRAWN SHELBY & IAN	4/14/2025		
CHECKED IAN	4/14/2025	SIZE C	DWG NO 265-0-22176-00	REV A
APPROVED SHELBY	4/14/2025	SCALE 3/4	SHEET 1 OF 2

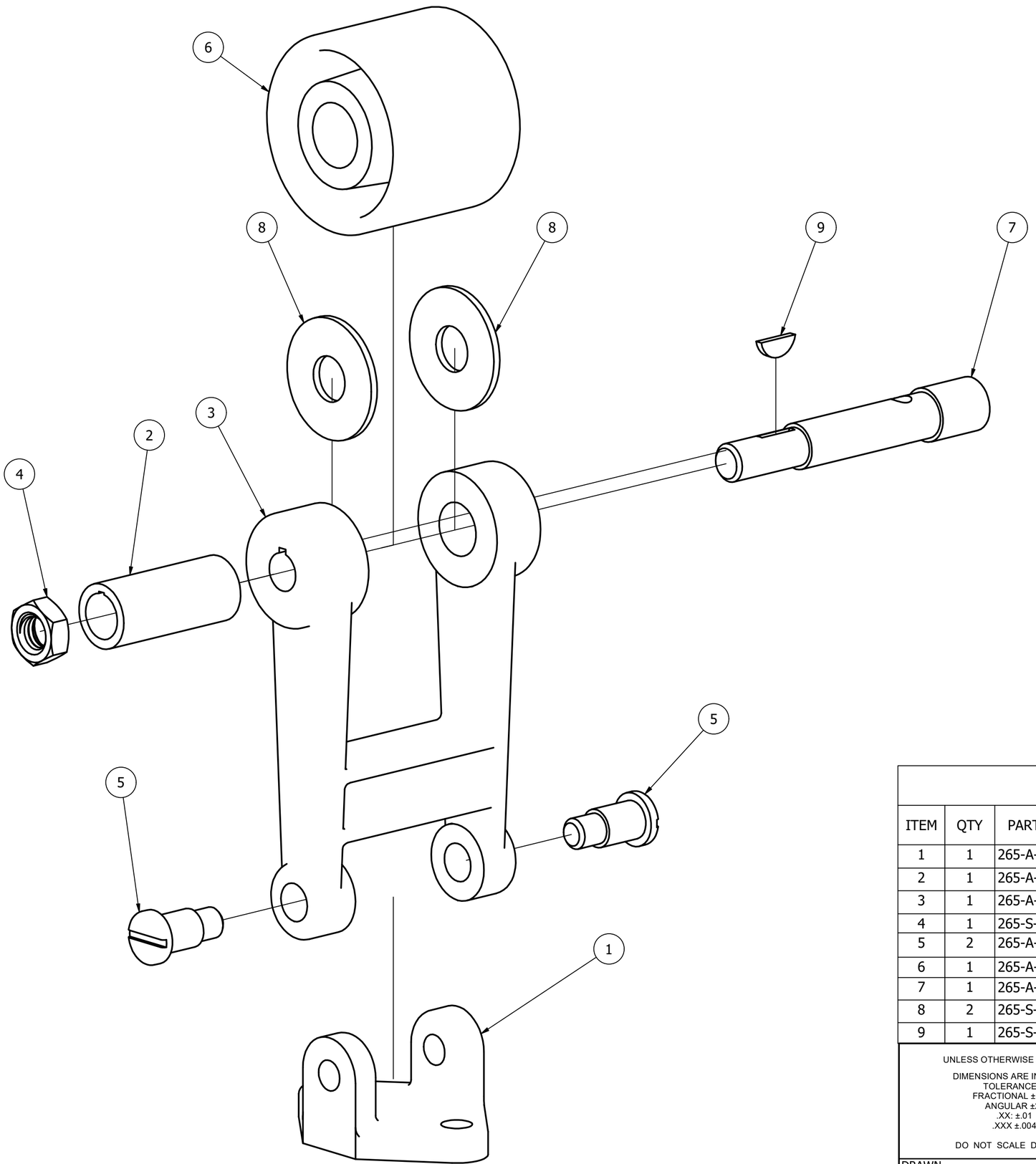

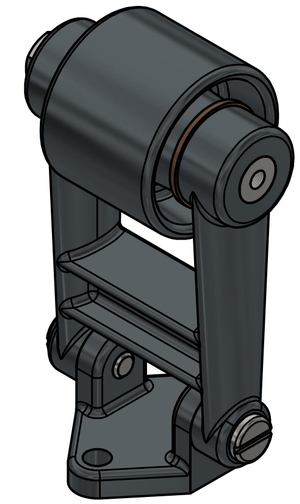

PARTS LIST

ITEM	QTY	PART NUMBER	APPEARANCE	MATERIAL	TITLE
1	1	265-A-22176-04	IRON GRAY	IRON, CAST	BRACKET
2	1	265-A-22176-05	BRONZE - SATIN	BRONZE, SOFT TIN	BUSHING
3	1	265-A-22176-01	IRON GRAY	IRON, CAST	FRAME
4	1	265-S-22176-03	SEMI-POLISHED	STEEL, MILD	5/8-11 UNC HEX NUT
5	2	265-A-22176-03	SEMI-POLISHED	STEEL, MILD	1/2-13UNC-3A PIN
6	1	265-A-22176-06	IRON GRAY	IRON, CAST	PULLEY
7	1	265-A-22176-02	SEMI-POLISHED	STEEL, MILD	SHAFT
8	2	265-S-22176-01	BRONZE - SATIN	BRONZE, SOFT TIN	WASHER
9	1	265-S-22176-02	STEEL	STEEL	#406 WOODRUFF KEY

UNLESS OTHERWISE SPECIFIED:

DIMENSIONS ARE IN INCHES
TOLERANCES:
FRACTIONAL ±1/32"
ANGULAR ±2°
.XX: ±.01
.XXX ±.004

DO NOT SCALE DRAWING

PORTLAND COMMUNITY COLLEGE

TITLE

BELT TIGHTENER ASSEMBLY

DRAWN SHELBY & IAN	4/14/2025		
CHECKED IAN	4/14/2025	SIZE C	DWG NO 265-0-22176-00	REV A
APPROVED SHELBY	4/14/2025	SCALE .75	SHEET 2 OF 2