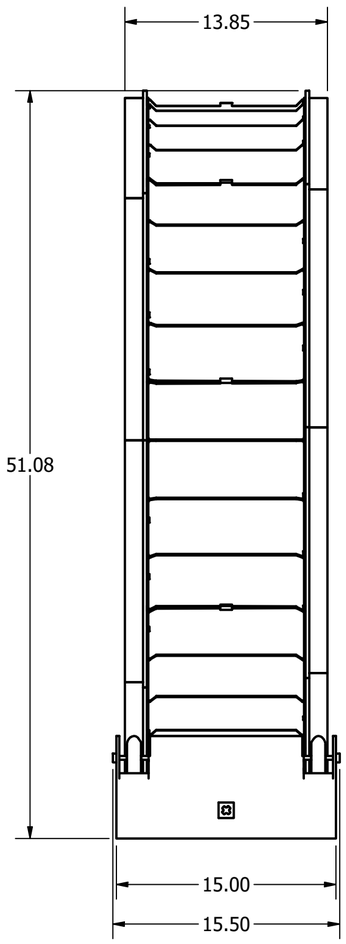

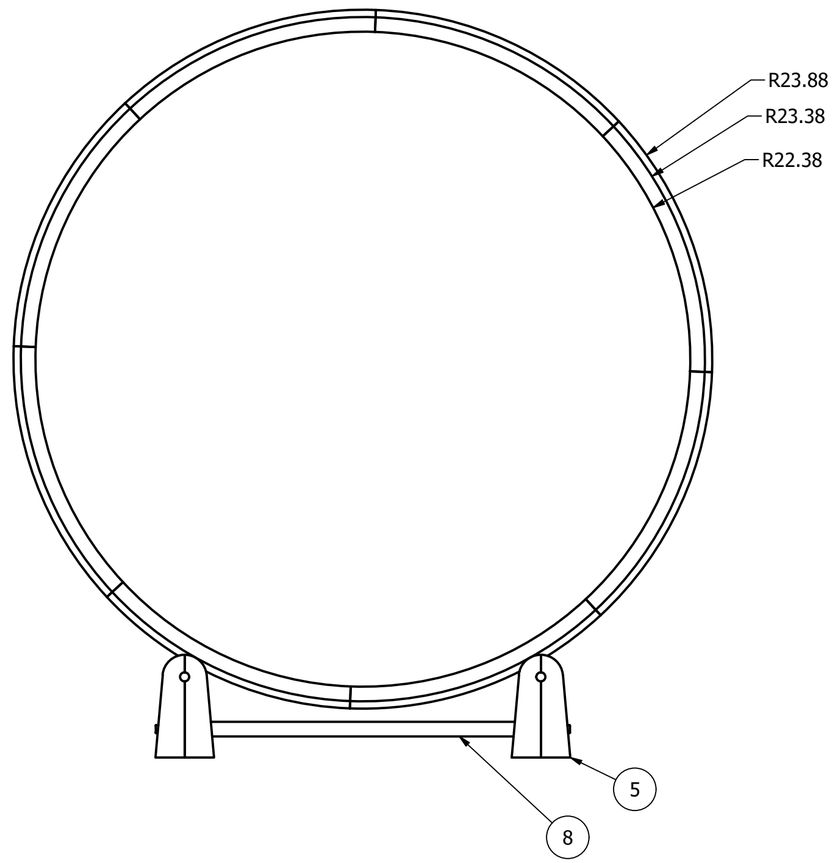

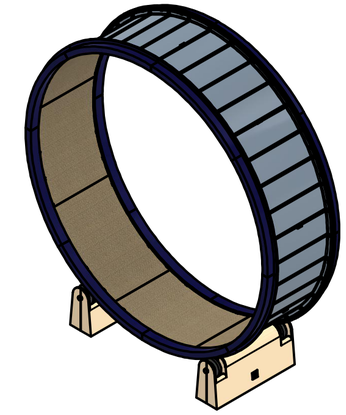

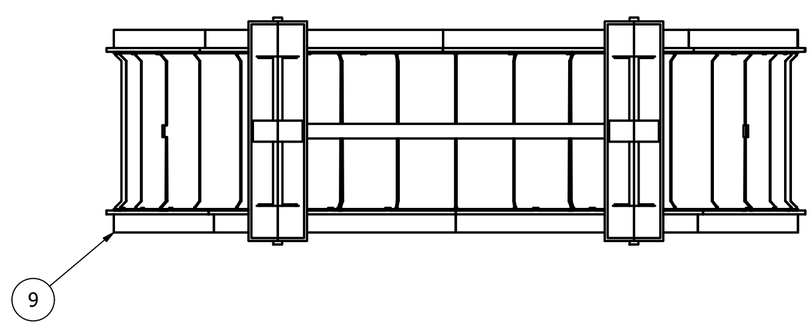

PARTS LIST			
ITEM	QTY	PART NUMBER	MATERIAL
1	2	BASE REDESIGN	ABS PLASTIC
2	2	BASE BAR	ALUMINUM 6061
3	4	PIN	ALUMINUM 6061
4	4	OUTER WHEEL	RUBBER
5	4	INNER WHEEL	ALUMINUM 6061
6	8	MID WHEEL	ALUMINUM 6061
7	4	FILLER RING	POLYETHYLENE, LOW DENSITY
8	2	HAND SCREW	ALUMINUM 6061
9	1	BAR	IRON, CAST
10	9	Plate	ABS PLASTIC
11	16	NEW RAIL	ABS PLASTIC

UNLESS OTHERWISE SPECIFIED:
DIMENSIONS ARE IN INCHES
TOLERANCES:
FRACTIONAL ±1/32"
ANGULAR ±2°
.XX: ±.01
.XXX ±.004

DO NOT SCALE DRAWING

PORTLAND COMMUNITY COLLEGE

TITLE

PRODUCT TEAR-DOWN AND REDESIGN

DRAWN SHELBY S	12/9/2025		
CHECKED SHELBY S			
APPROVED			
SIZE C		DWG NO Full Assembly	REV A
SCALE 1/8			SHEET 1 OF 2

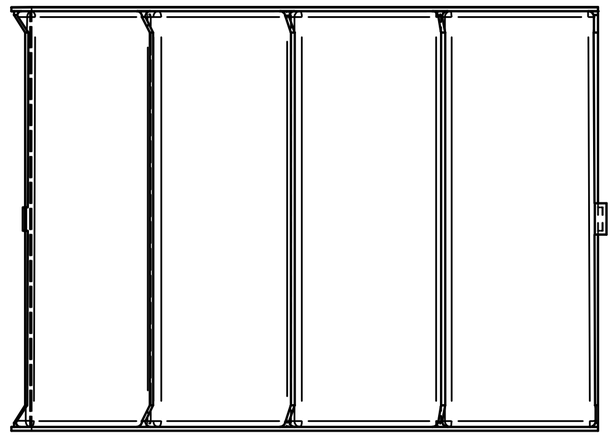

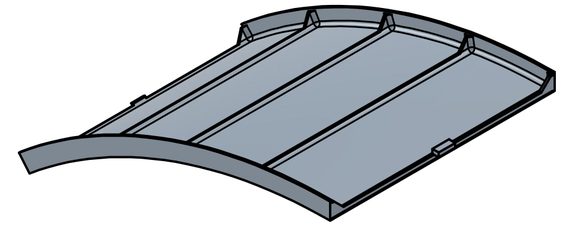

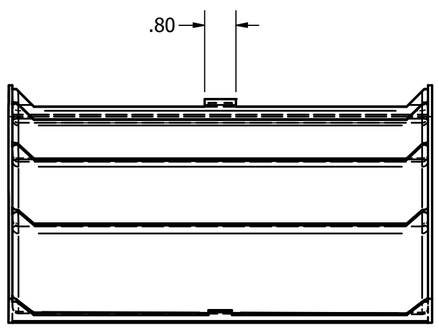

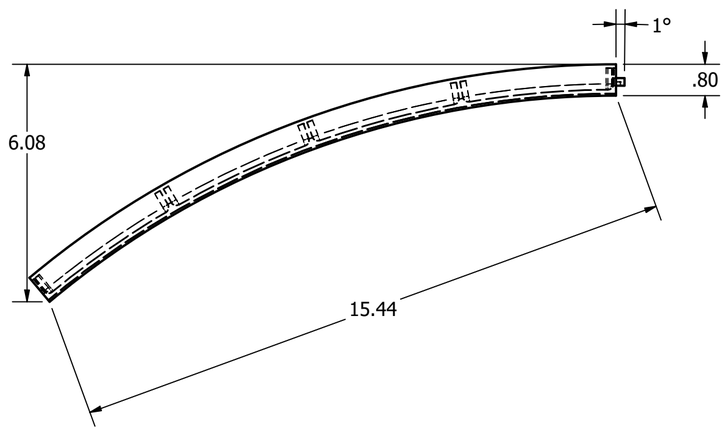

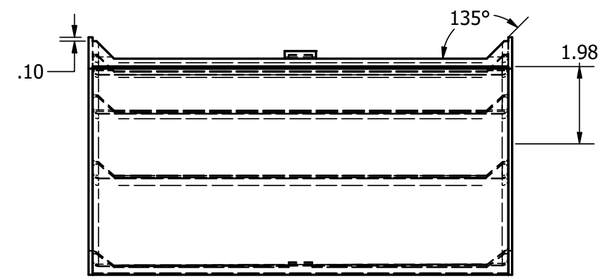

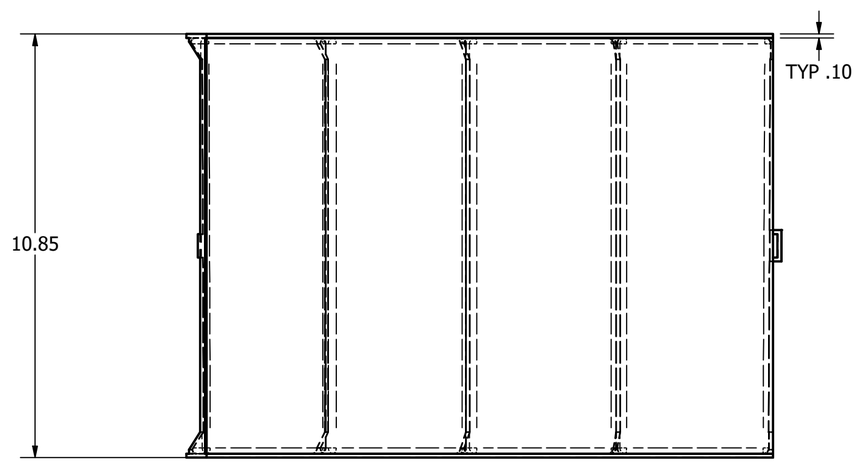

.25° DRAFT ANGLE TYP

UNLESS OTHERWISE SPECIFIED:

DIMENSIONS ARE IN INCHES
TOLERANCES:
FRACTIONAL ±1/32"
ANGULAR ±2°
.XX: ±.01
.XXX ±.004

DO NOT SCALE DRAWING

DRAWN SHELBY S	12/9/2025
CHECKED SHELBY S	
APPROVED	

PORTLAND COMMUNITY COLLEGE

TITLE

PRODUCT TEAR-DOWN AND REDESIGN

SIZE	DWG NO	REV
C	Plate	A

SCALE 1/3 SHEET 2 OF 2