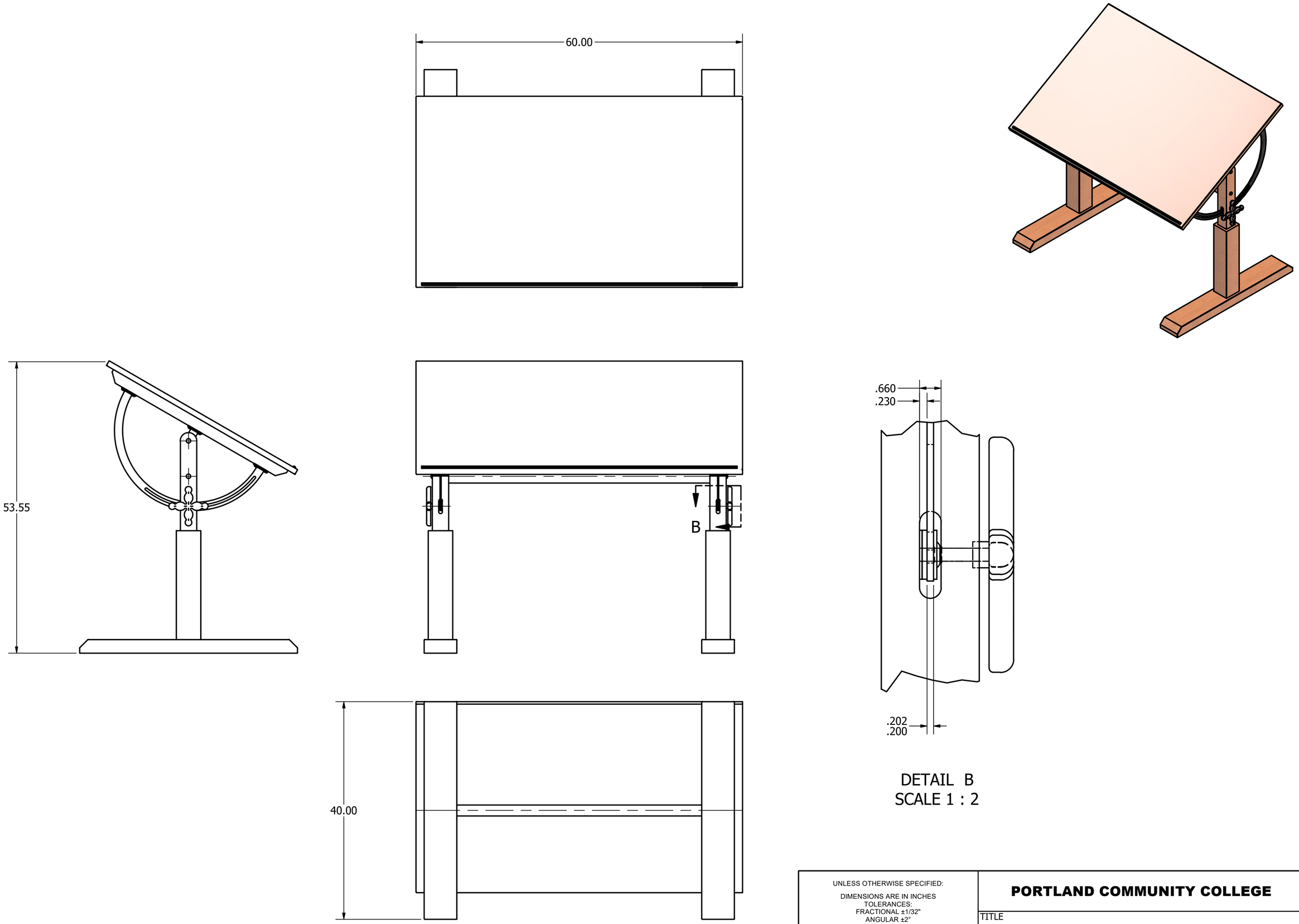

UNLESS OTHERWISE SPECIFIED:
DIMENSIONS ARE IN INCHES
TOLERANCES:
FRACTIONAL ±1/32"
ANGULAR ±2°
.XX: ±.01
.XXX ±.004

DO NOT SCALE DRAWING

DRAWN SHELBY	6/9/2025		
CHECKED			
APPROVED			

PORTLAND COMMUNITY COLLEGE

TITLE

DRAFTING DESK

SIZE	DWG NO	REV
C	DDA265-1	A

SCALE 1 : 12 | MATERIAL | SHEET 1 OF 6

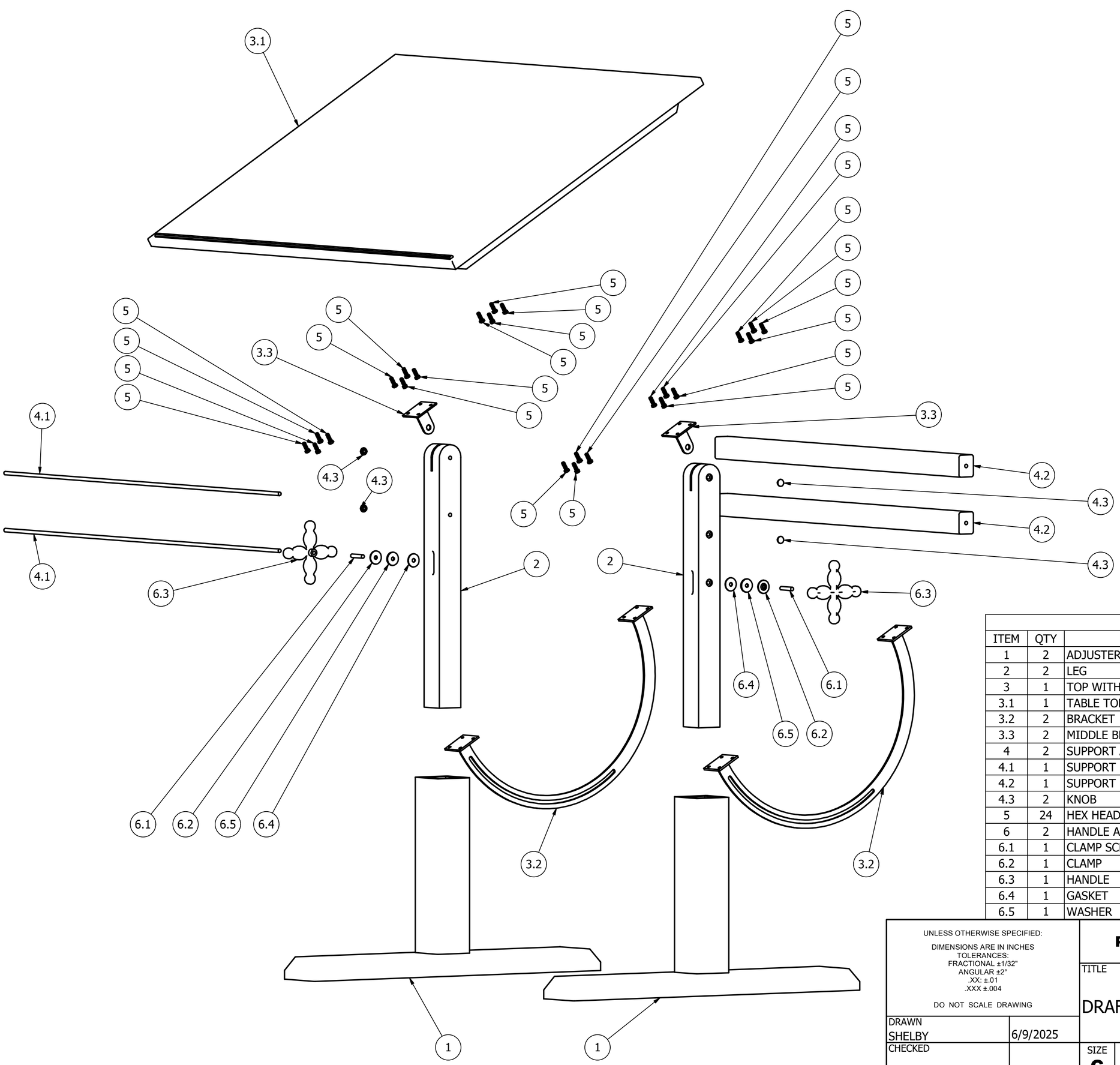

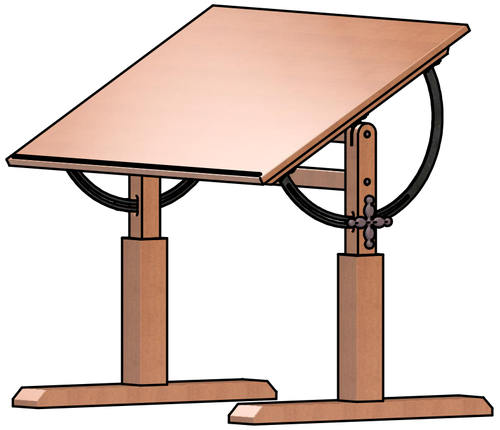

PARTS LIST			
ITEM	QTY	PART NUMBER	MATERIAL
1	2	ADJUSTER	LAUAN, MERANTI
2	2	LEG	LAUAN, MERANTI
3	1	TOP WITH BRACKETS	
3.1	1	TABLE TOP	LAUAN, MERANTI
3.2	2	BRACKET	IRON, WROUGHT
3.3	2	MIDDLE BRACKET	IRON, WROUGHT
4	2	SUPPORT ASSEMBLY	
4.1	1	SUPPORT ROD	IRON, GRAY
4.2	1	SUPPORT BAR	LAUAN, MERANTI
4.3	2	KNOB	PORCELAIN, LINEN
5	24	HEX HEAD SCREW - 91268A187	STEEL, MILD
6	2	HANDLE ASSEMBLY	
6.1	1	CLAMP SCREW	STEEL, ALLOY
6.2	1	CLAMP	STEEL, ALLOY
6.3	1	HANDLE	PLASTIC, OPAQUE BLACK
6.4	1	GASKET	RUBBER, SILICONE
6.5	1	WASHER	STEEL, MILD

UNLESS OTHERWISE SPECIFIED:

DIMENSIONS ARE IN INCHES
TOLERANCES:
FRACTIONAL ±1/32"
ANGULAR ±2°
.XX: ±.01
.XXX ±.004

DO NOT SCALE DRAWING

PORTLAND COMMUNITY COLLEGE

TITLE

DRAFTING DESK

DRAWN SHELBY	6/9/2025		
CHECKED			
APPROVED			
SIZE C	DWG NO DDA265-2		REV A
SCALE 1 : 8	MATERIAL	SHEET 2 OF 6	

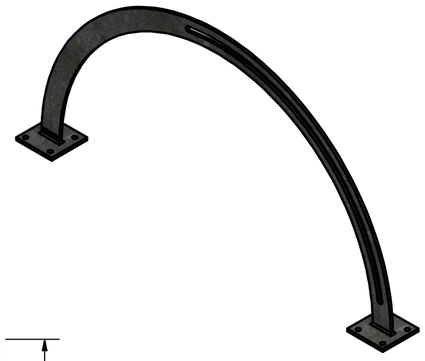

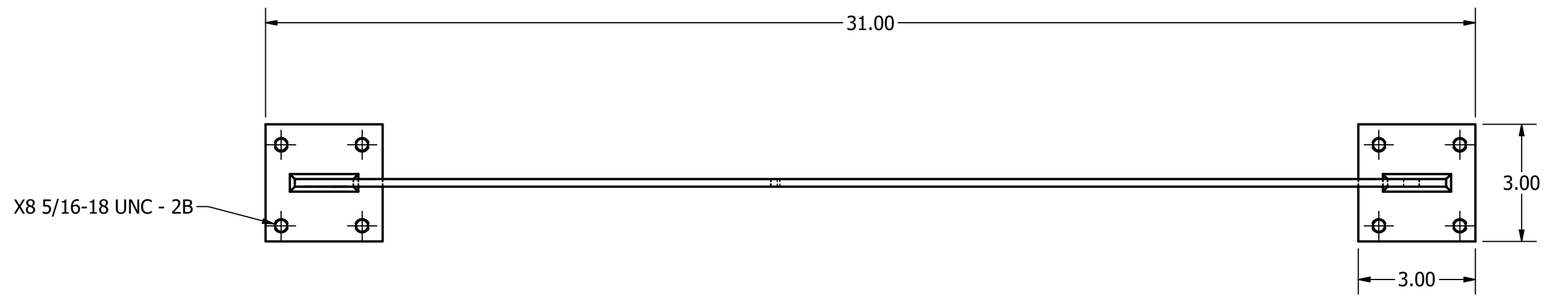

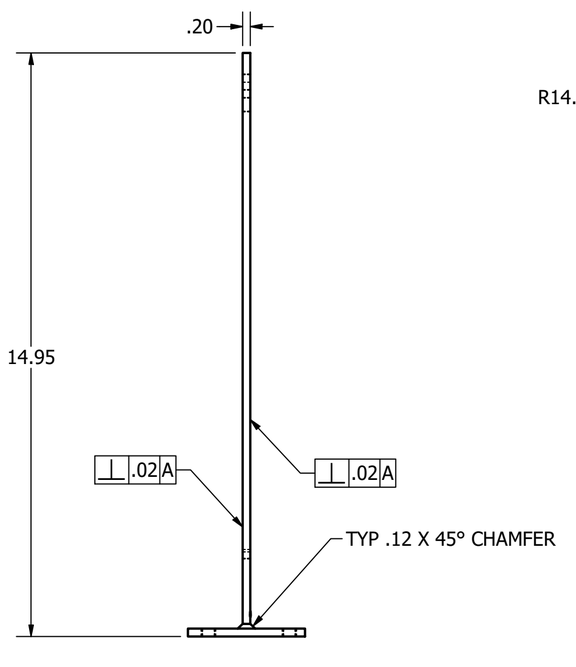

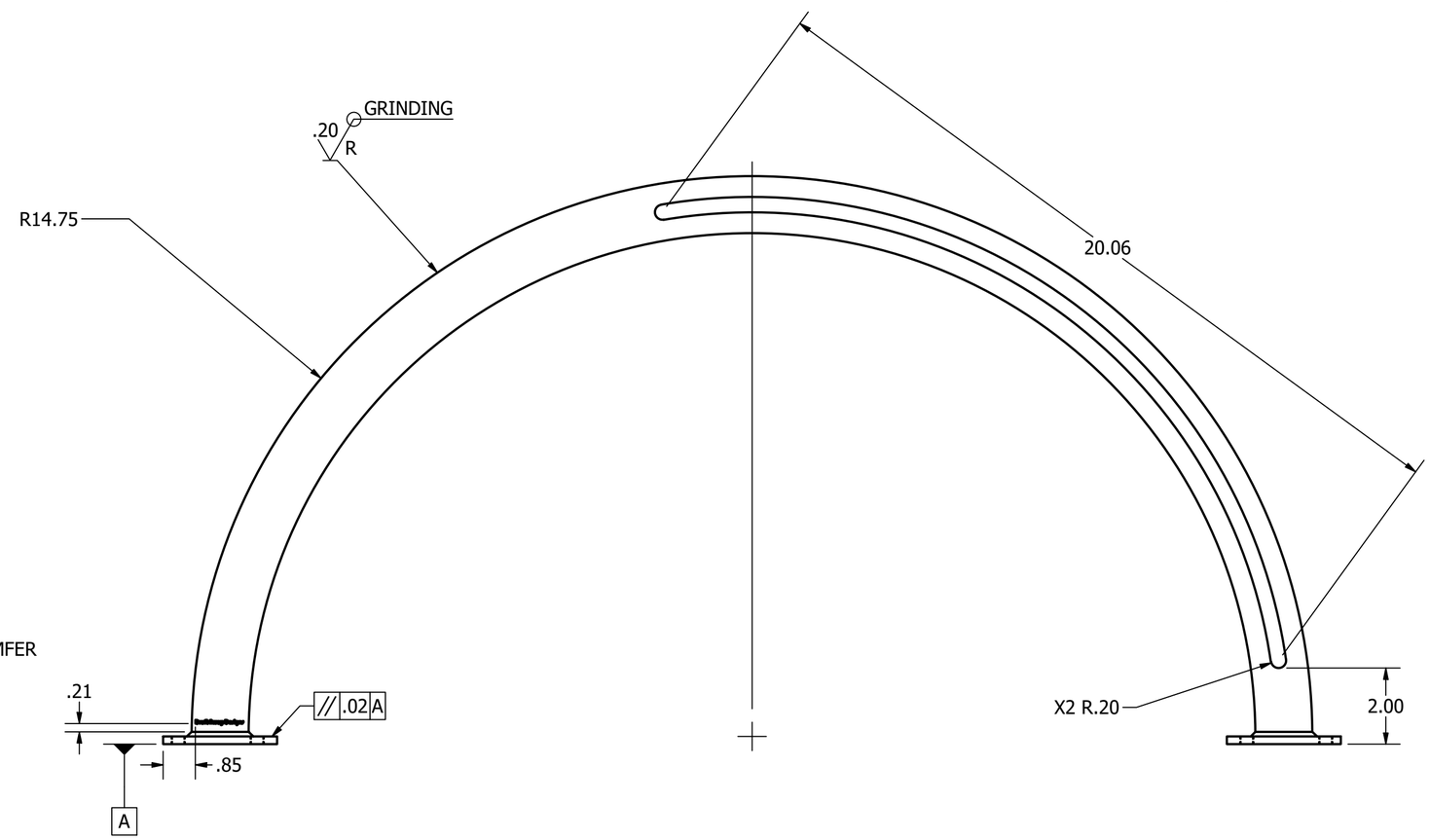

NOTES: (UNLESS OTHERWISE SPECIFIED)
1. EMBOSS DEPTH OF .01"
2. EMBOSS TEXT: FONT - BAUHAUS 93, SIZE - .10"

UNLESS OTHERWISE SPECIFIED:
DIMENSIONS ARE IN INCHES
TOLERANCES:
FRACTIONAL ±1/32"
ANGULAR ±2°
.XX: ±.01
.XXX ±.004

DO NOT SCALE DRAWING

DRAWN SHELBY	6/9/2025	
CHECKED		
APPROVED		

PORTLAND COMMUNITY COLLEGE

TITLE
DRAFTING DESK

SIZE	DWG NO	REV
C	DDB265-3	A

SCALE 1 : 3 | MATERIAL IRON, WROUGHT | SHEET 3 OF 6

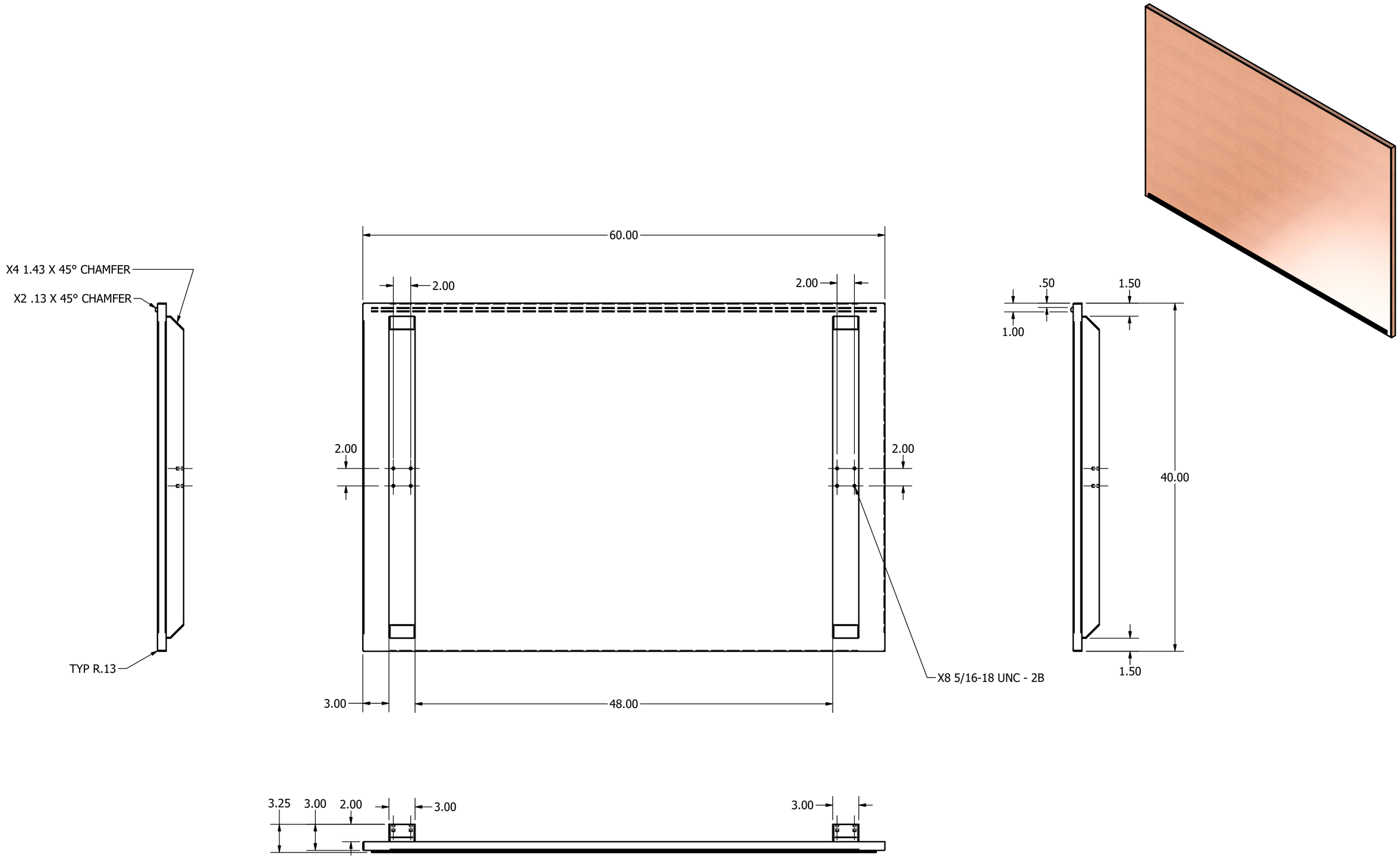

UNLESS OTHERWISE SPECIFIED:

DIMENSIONS ARE IN INCHES
TOLERANCES:
FRACTIONAL ±1/32"
ANGULAR ±2°
.XX: ±.01
.XXX ±.004

DO NOT SCALE DRAWING

DRAWN SHELBY	6/9/2025	
CHECKED		
APPROVED		

PORTLAND COMMUNITY COLLEGE

TITLE

DRAFTING DESK

SIZE	DWG NO	REV
C	DDS265-4	A

SCALE 1 : 8 | MATERIAL LAUAN, MERANTI | SHEET 4 OF 6

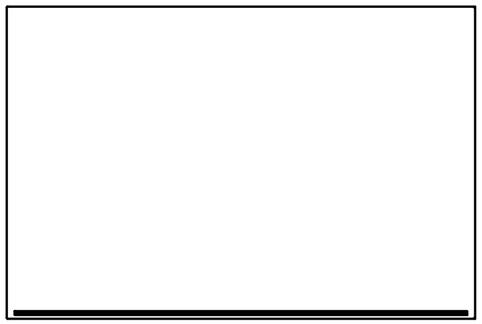

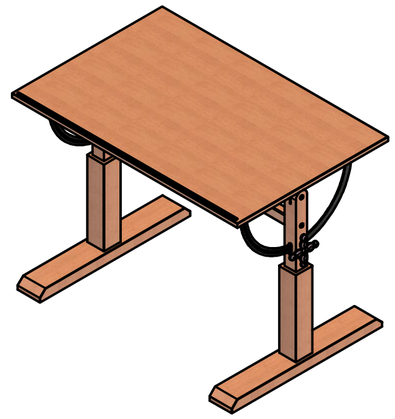

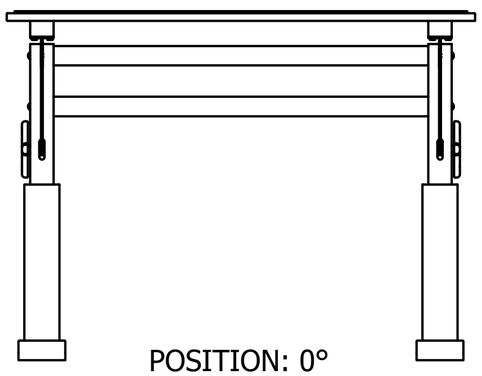

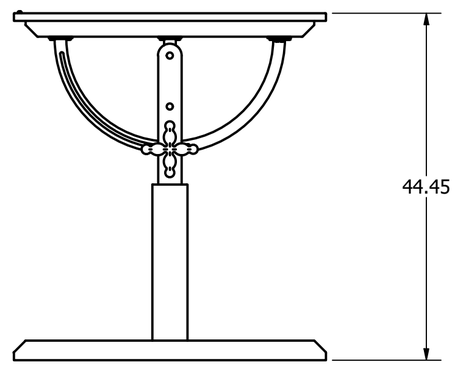

POSITION: 0°

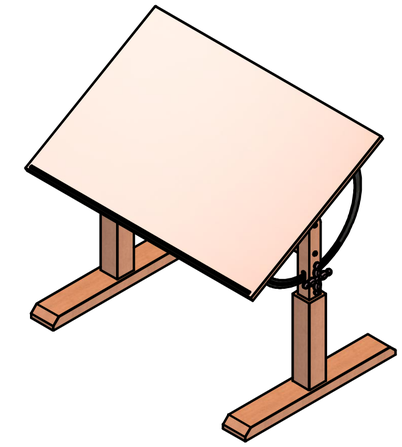

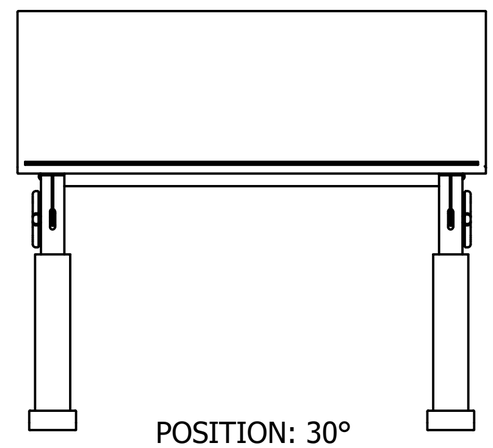

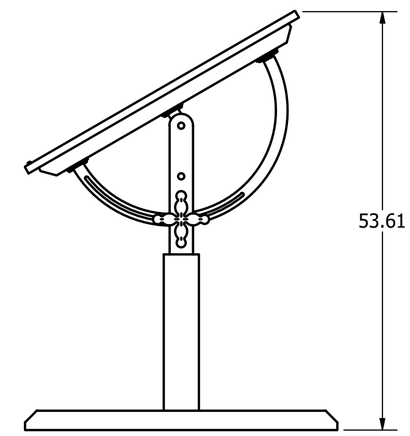

POSITION: 30°

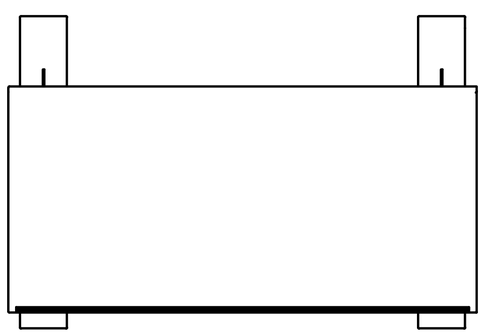

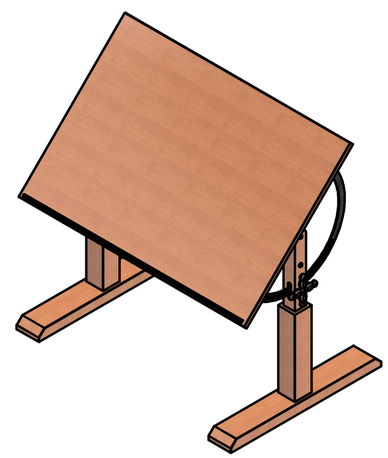

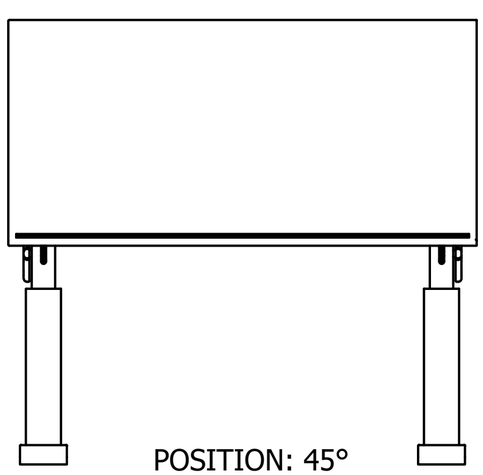

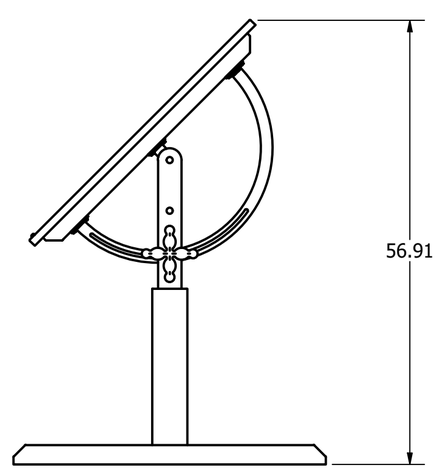

POSITION: 45°

UNLESS OTHERWISE SPECIFIED:

DIMENSIONS ARE IN INCHES
TOLERANCES:
FRACTIONAL ±1/32"
ANGULAR ±2°
.XX: ±.01
.XXX ±.004

DO NOT SCALE DRAWING

DRAWN SHELBY	6/9/2025	
CHECKED		
APPROVED		

PORTLAND COMMUNITY COLLEGE

TITLE

DRAFTING DESK

SIZE	DWG NO	REV
C	DDA265-5	A

SCALE 1 / 15 | MATERIAL | SHEET 5 OF 6

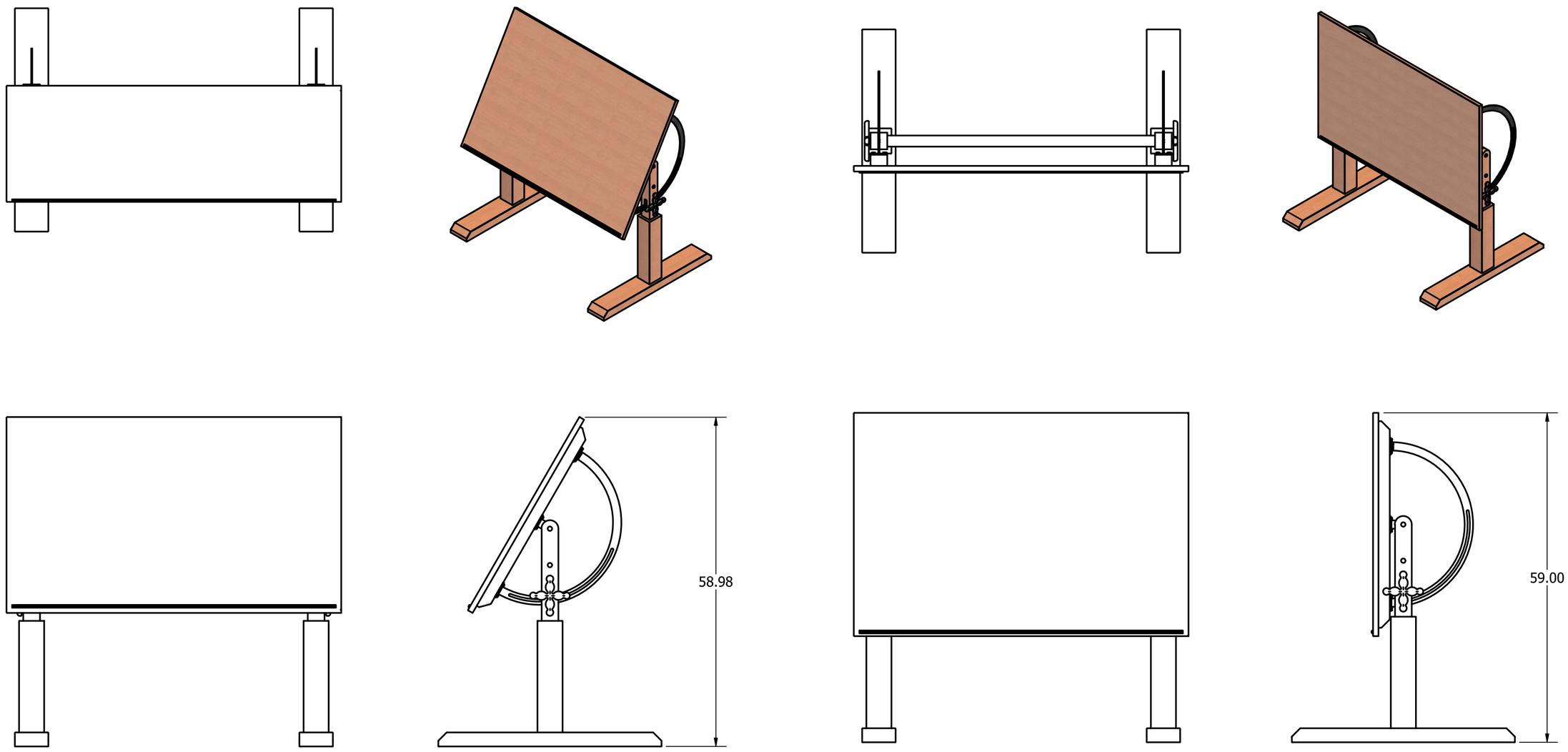

POSITION: 60°

POSITION: 90°

UNLESS OTHERWISE SPECIFIED:

DIMENSIONS ARE IN INCHES
TOLERANCES:
FRACTIONAL ±1/32"
ANGULAR ±2°
.XX: ±.01
.XXX ±.004

DO NOT SCALE DRAWING

DRAWN SHELBY	6/9/2025
CHECKED	
APPROVED	

PORTLAND COMMUNITY COLLEGE

TITLE

DRAFTING DESK

SIZE	DWG NO	REV
C	DDA265-6	A

SCALE 1 / 15 | MATERIAL | SHEET 6 OF 6