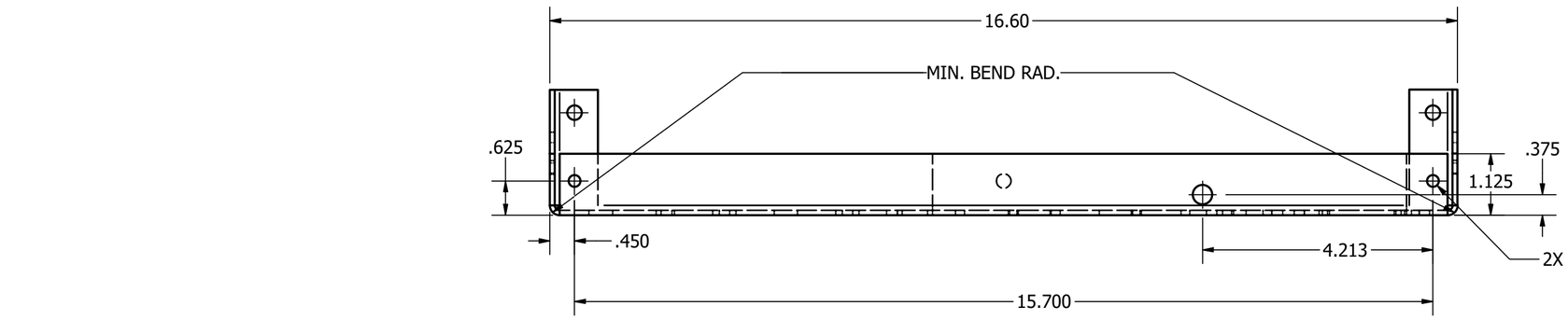

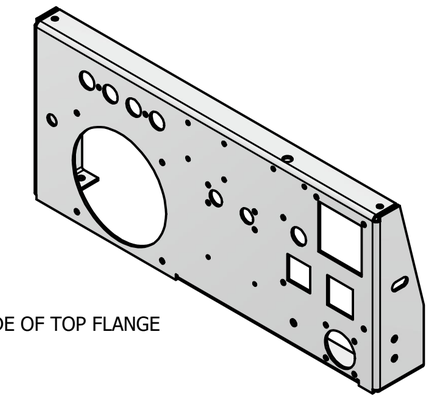

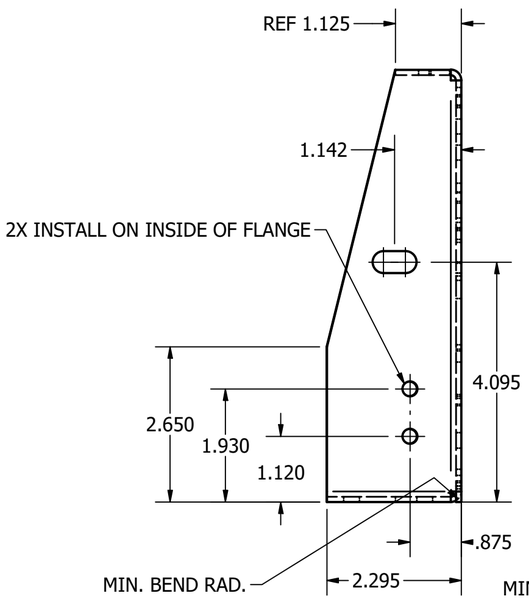

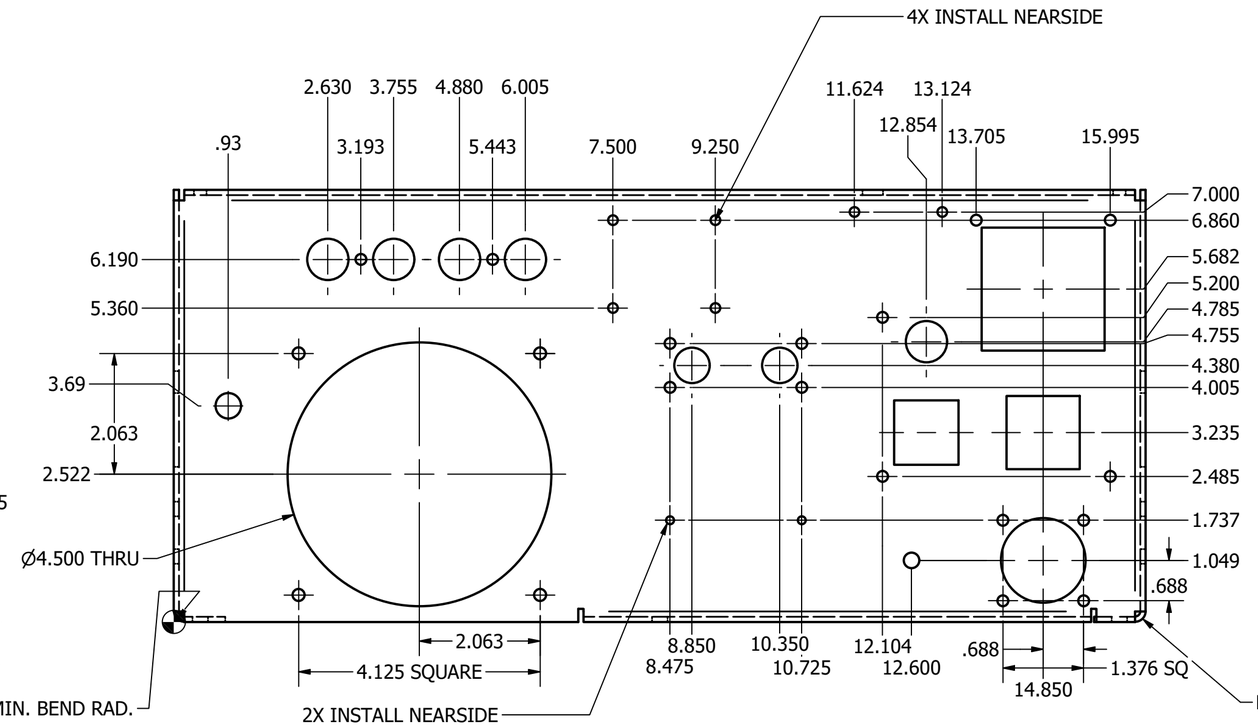

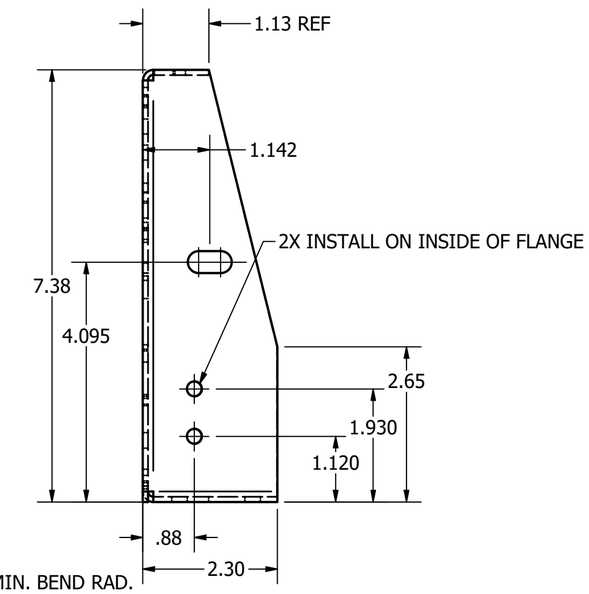

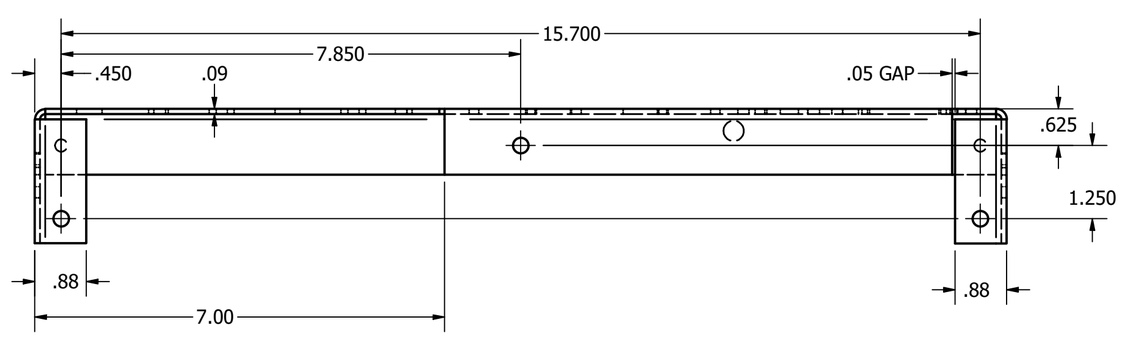

UNLESS OTHERWISE SPECIFIED:
DIMENSIONS ARE IN INCHES
TOLERANCES:
FRACTIONAL ±1/32"
ANGULAR ±2°
.XX: ±.01
.XXX ±.004

DO NOT SCALE DRAWING

DRAWN Shelby	10/14/2025	
CHECKED		
APPROVED		

Portland Community College

TITLE
REAR PANEL

SIZE	DWG NO	REV
C	SHEET METAL CHALLENGE	A
SCALE 1 / 2		SHEET 1 OF 1