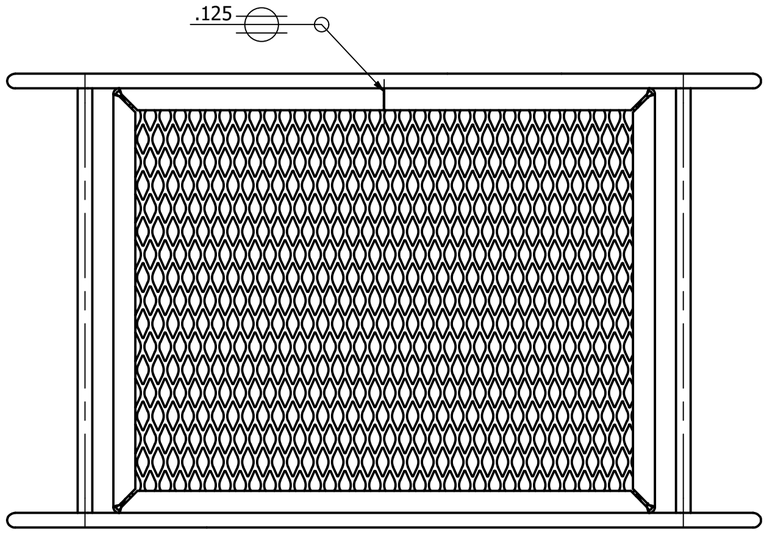

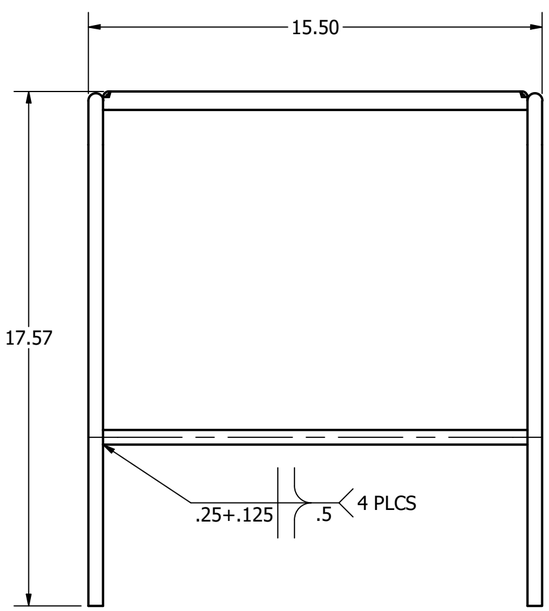

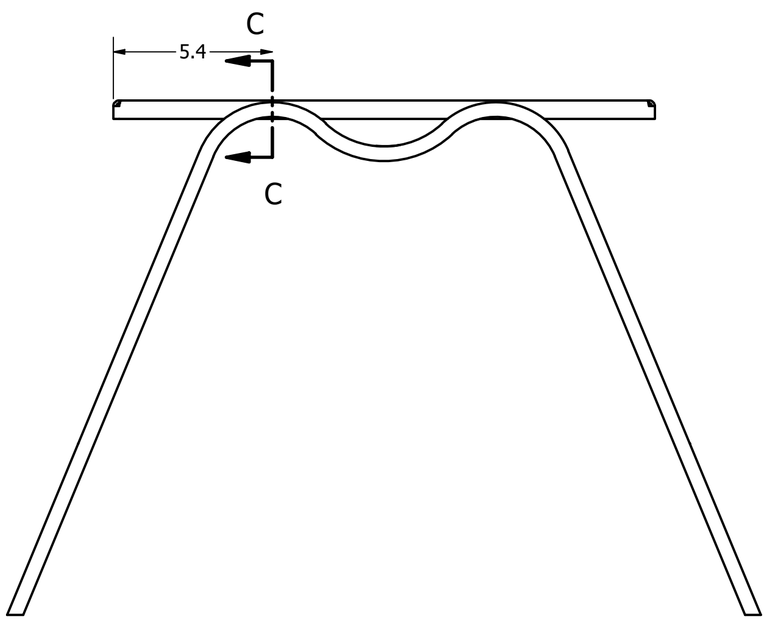

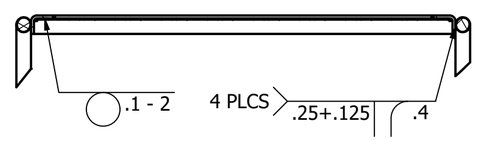

SECTION C-C

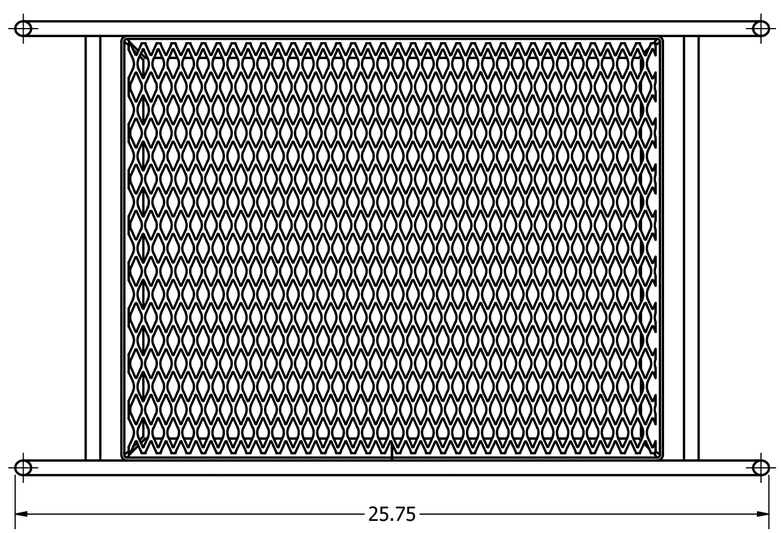

NOTE:
SPOT WELDS ARE PLACED EVERY 2" ALONG WHERE THE TRIM MEETS THE GRATE ON ALL 4 SIDES.

PARTS LIST

ITEM	QTY	PART NUMBER	MATERIAL
1	1	TRIM	STEEL, MILD
2	1	GRATE	IRON, GRAY
3	2	LEG POLE	IRON, CAST
4	2	LEG	IRON, CAST

UNLESS OTHERWISE SPECIFIED:
DIMENSIONS ARE IN INCHES
TOLERANCES:
FRACTIONAL ±1/32"
ANGULAR ±2°
.XX: ±.01
.XXX ±.004

DO NOT SCALE DRAWING

Portland Community College

TITLE
WELDMENT PROJECT B

DRAWN Shelby	5/14/2025		
CHECKED PERSON 1	5/15/2025	SIZE C	DWG NO CADD265WP-B	REV A
APPROVED PERSON 2	5/15/2025	SCALE 1 / 4	SHEET 1 OF 1