TMR SENSOR X16 CONNECTED IN PARALLEL

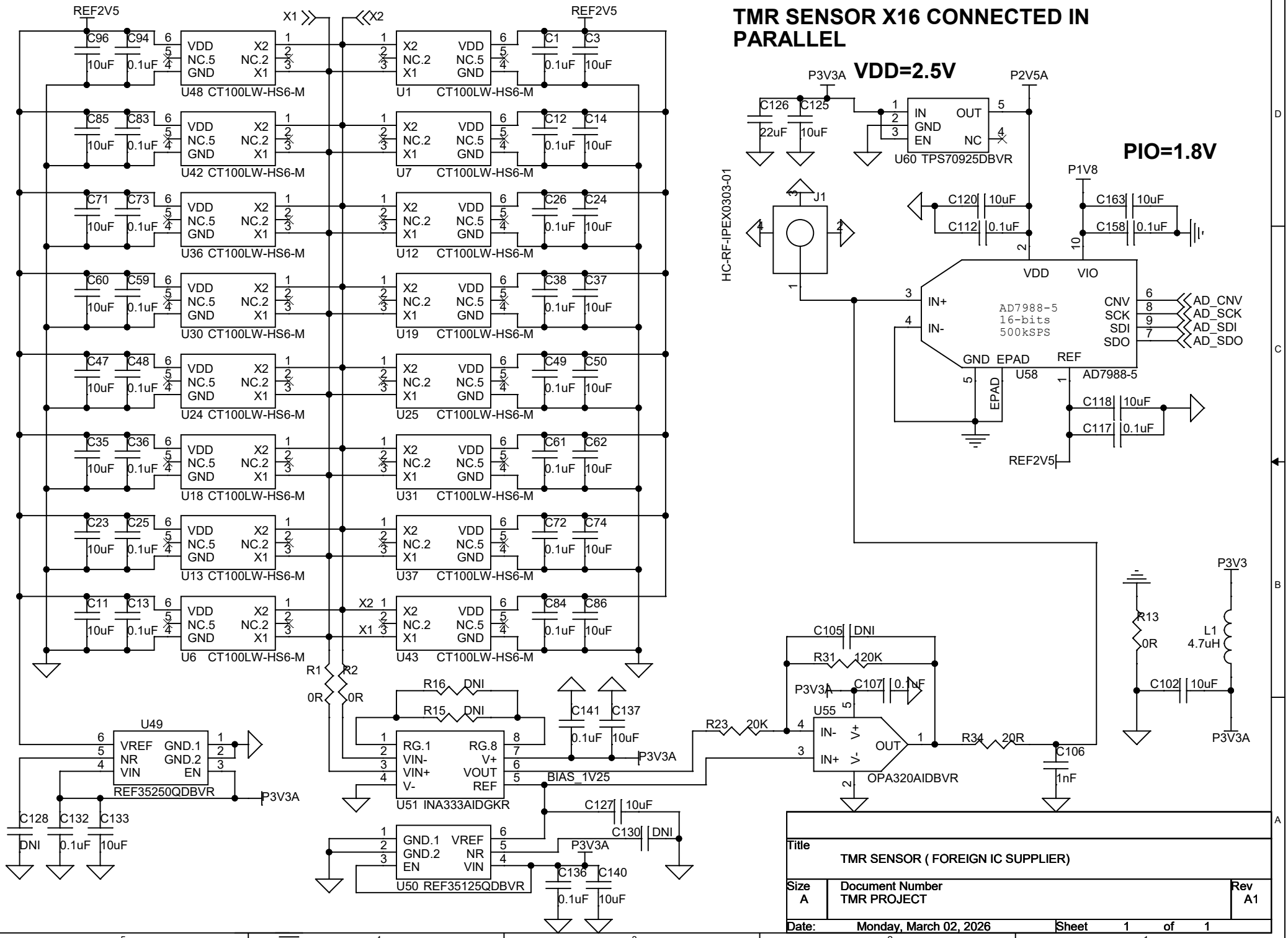

Title: TMR SENSOR (FOREIGN IC SUPPLIER)

Size	Document Number	Rev
A	TMR PROJECT	A1

Date: Monday, March 02, 2026 Sheet 1 of 1