ATTENTION !!!
PCLK MUST BE ROUTED TO FPGA CLK IN PIN
FOR USING AS A CLOCK SIGNAL

Yantai InfiRay Lite640x512 Infrared Image Sensor

CDS3 1.8V IO

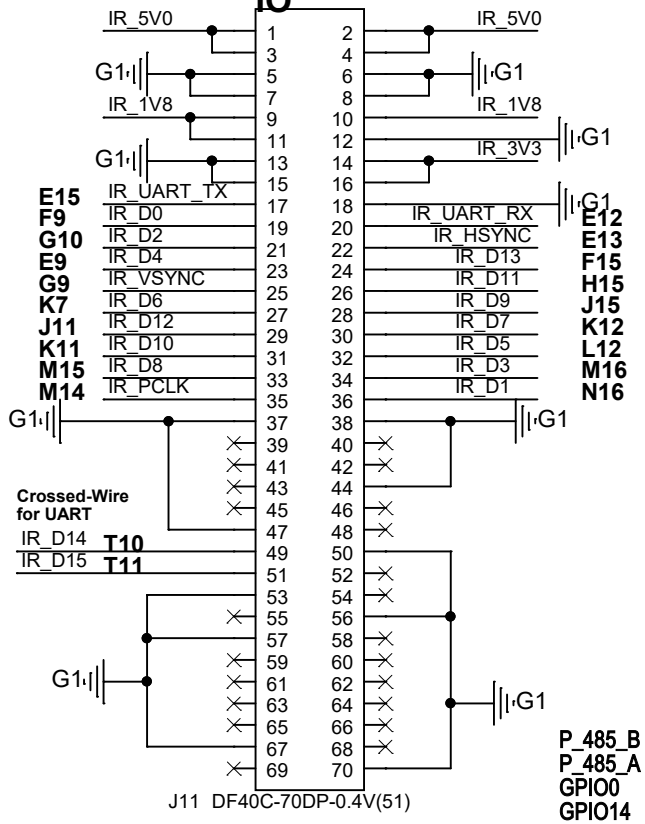

Yantai InfiRay MicroIII 256L Infrared Image Sensor
256*192@14bits
CDS2 Interface 1.8V IO: PCLK, VSYNC, HSYNC, DATA[0:13] (Pixel + Temperature)
350mW

ATTENTION !!!
PCLK MUST BE ROUTED TO FPGA CLK IN PIN
FOR USING AS A CLOCK SIGNAL

1.8V IO

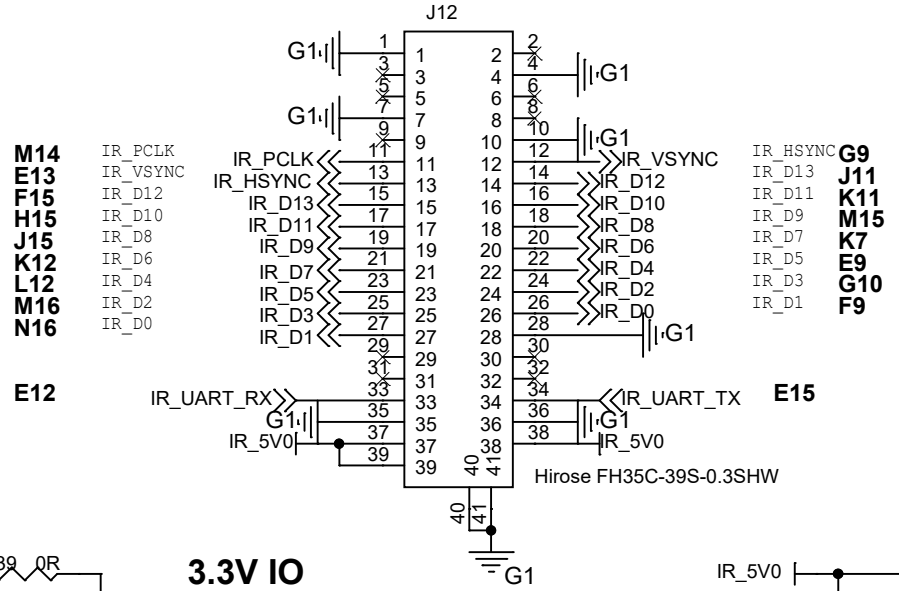

3.3V IO
VCCA<=VCCB

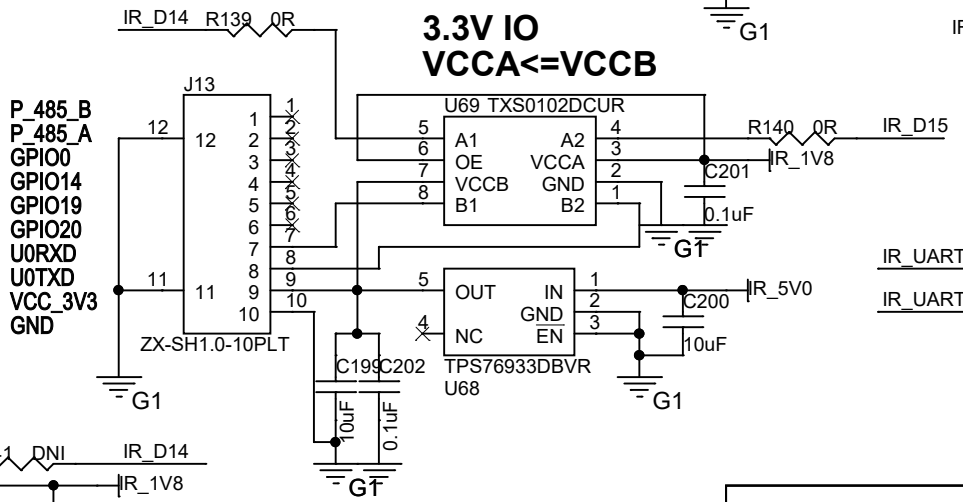

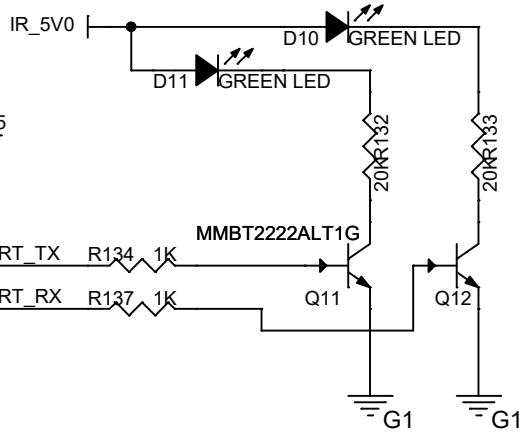

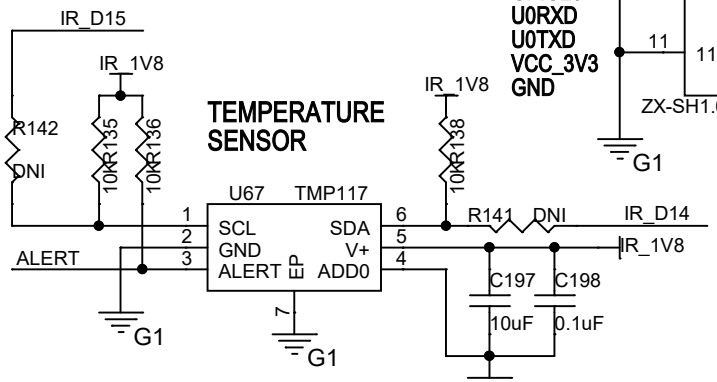

TEMPERATURE SENSOR

ADDR: 1001000x

Title	Adapter for connecting IR-256x192(FPC-39) to IR-640x512(Hirose-70)
Size A	Document Number <Doc>
Rev A1	
Date: Monday, March 02, 2026	Sheet 1 of 8