CHARGING

VIN: 5V~7V

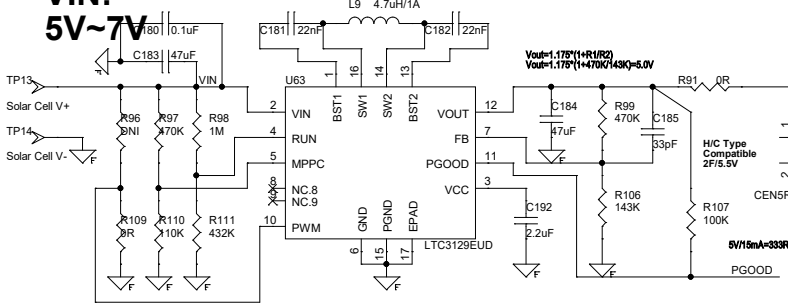

RUN:
pull this pin above 1.1V to enable VCC regulator and above 1.28V to enable the converter.

RUN
432/(1000+432)*5=1.5V

Vin(MPPC)=1.175*(1+R5/R6)
=1.175*(1+470K/110K)
=6.2V

PWM
1: Automatic burst mode.
0: Fixed PWM mode.

STEP-UP CONVERTER

LTC3539
2A 1MHz Synchronous Step-Up DC/DC Converters
VIN=0.7V~5V

MODE = High: Burst Mode operation at light loads, >=0.88V
MODE = Low: Fixed frequency PWM Mode, <0.3V

L=Vout*(1-D)*T/(CR*Iout)
=5.0*(1-50%)*1uS/(30%*200mA)
=4.2uH

P5V0

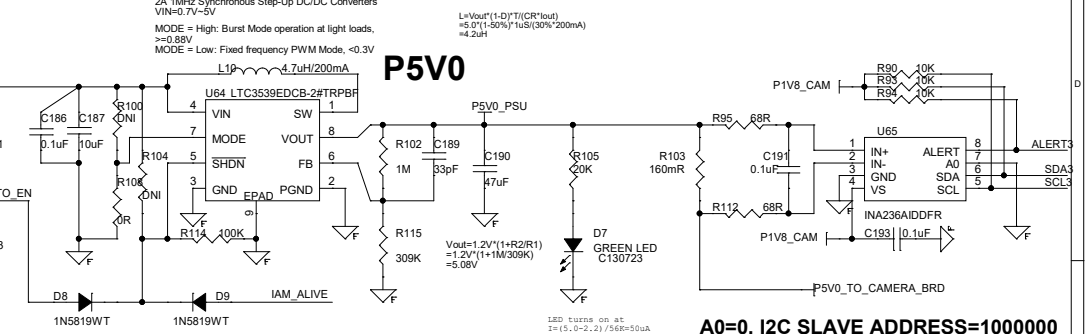

VFD=0.3V @1mA
SHDN_N: LOW<0.3V, HIGH>0.88V

A0=0, I2C SLAVE ADDRESS=1000000

Rshunt=81.92mV/500mA=164mR
Pshunt=81.92mV*500mA=40.96mW

850nm Photovoltaic Cell outputs maximum power at 6.2V

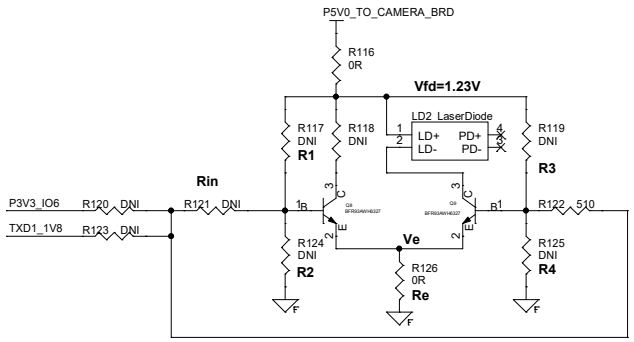

VCAP will be charged to 5V.
In order to keep AUTO_EN available during FPGA starts,
choose 4V as the lowest value,
VCAP drops from 5V to 4V, FPGA starts up and outputs IAM_ALIVE to lock SHDN.

VCAP=5.0V, AUTO_EN=4.3K/(10K+4.3K)*VCAP=1.5V, SHDN=AUTO_EN-VFD=1.5-0.3=1.2V
VCAP=4.0V, AUTO_EN=4.3K/(10K+4.3K)*VCAP=1.2V, SHDN=AUTO_EN-VFD=1.2-0.3=0.9V

IAM_ALIVE=1.8V, SHDN=IAM_ALIVE-VFD=1.8-0.3=1.5V

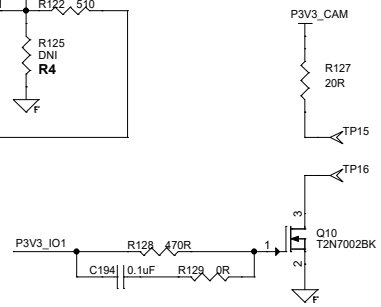

VCCA<=VCCB

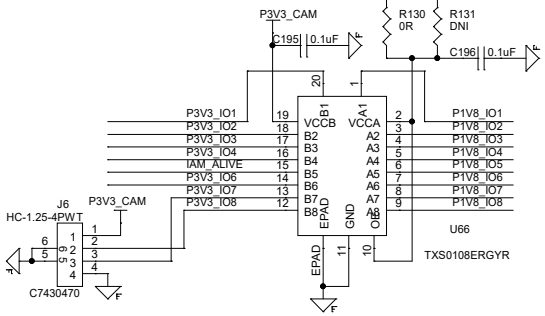

RESERVED IO

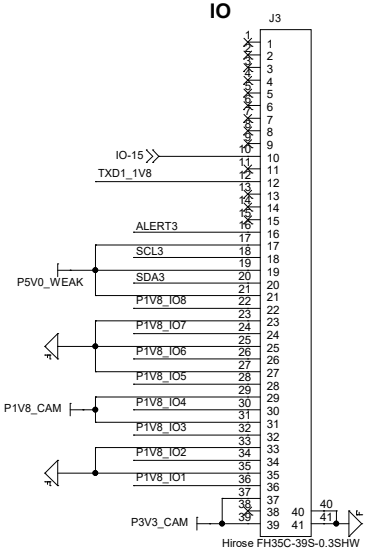

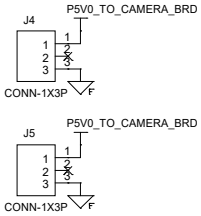

Title	ENERGY HARVEST FOR DPU BOARD	
Size A3	Document Number <Doc>	Rev A1
Date: Monday, March 02, 2026	Sheet 1 of 5	