VIN: 5V~7V

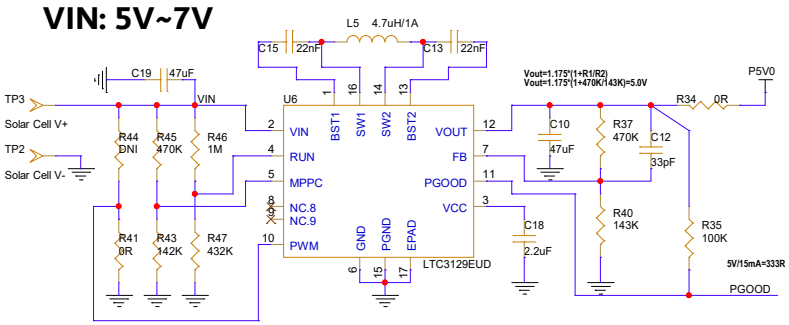

RUN:
pull this pin above 1.1V to enable VCC regulator
and above 1.28V to enable the converter.

RUN 432/(1000+432)*5=1.5V

Vin(MPPC)=1.175*(1+R5/R6)
=1.175*(1+470K/142K)
=5.06V

PWM
1: Automatic burst mode.
0: Fixed PWM mode.

BUCK CONVERTER 5V->1V2 & 5V->1V8

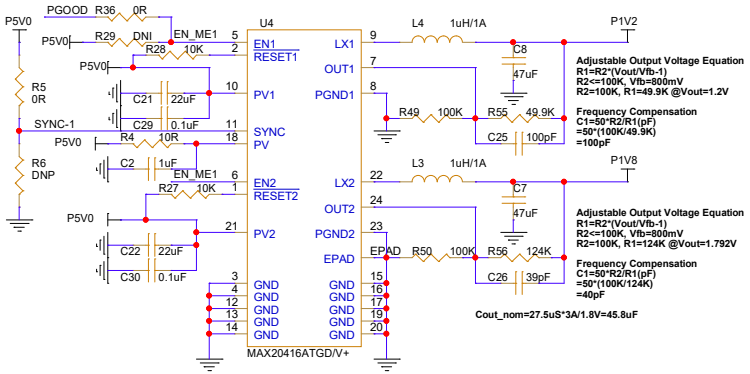

BUCK CONVERTER 5V->3V3 & 5V->2V8

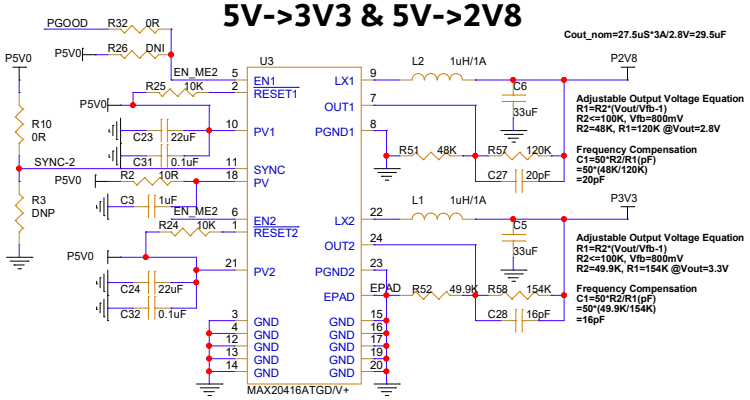

sysCONFIG Port / Pins

The sysCONFIG pins are dual function,
meaning they can be recovered as user I/O after configuration is complete.

Horizontal-Short to Program Flash
Vertical-Short to Program ICE

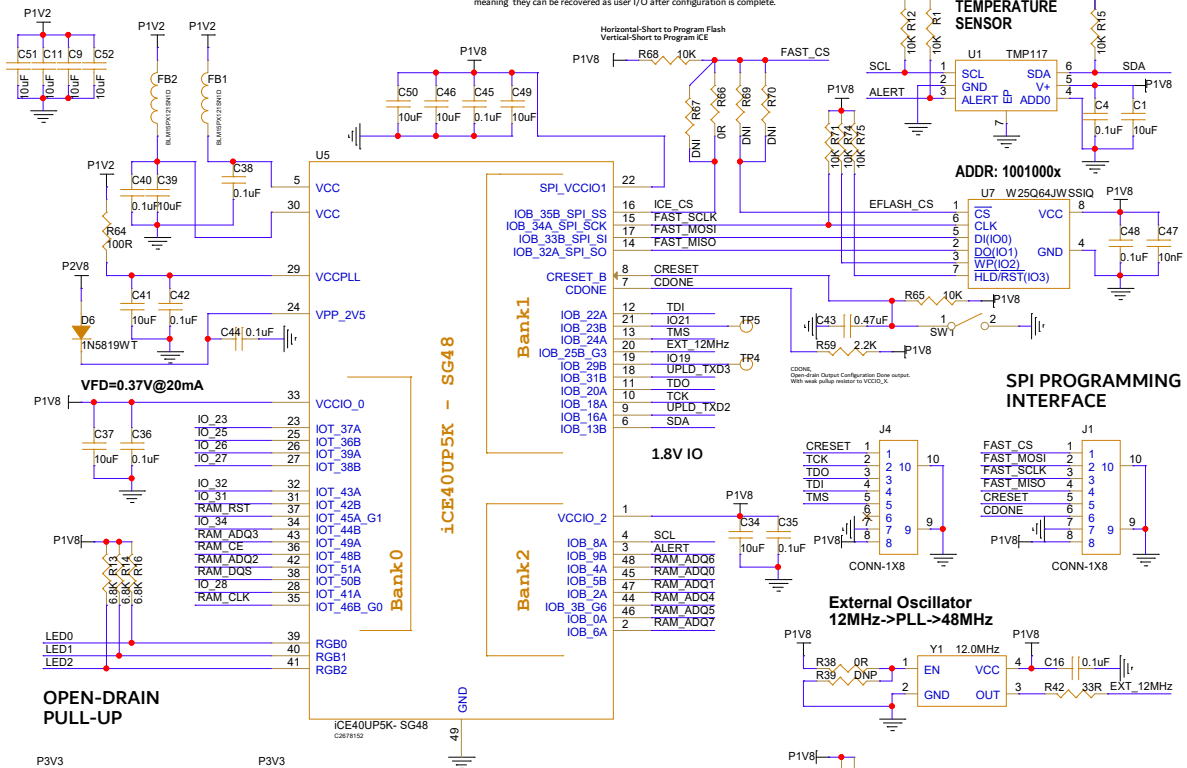

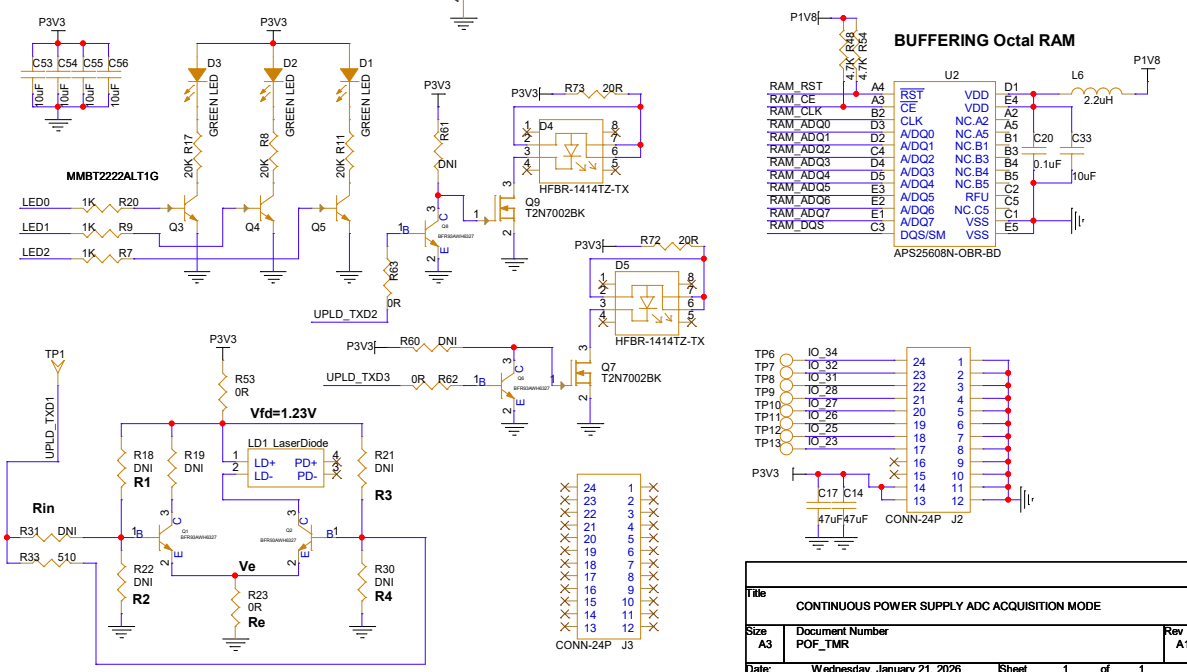

Title	CONTINUOUS POWER SUPPLY ADC ACQUISITION MODE	
Size A3	Document Number POF_TMR	Rev A1
Date: Wednesday, January 21, 2026	Sheet 1 of 1	