# TMR SENSOR X16 CONNECTED IN PARALLEL

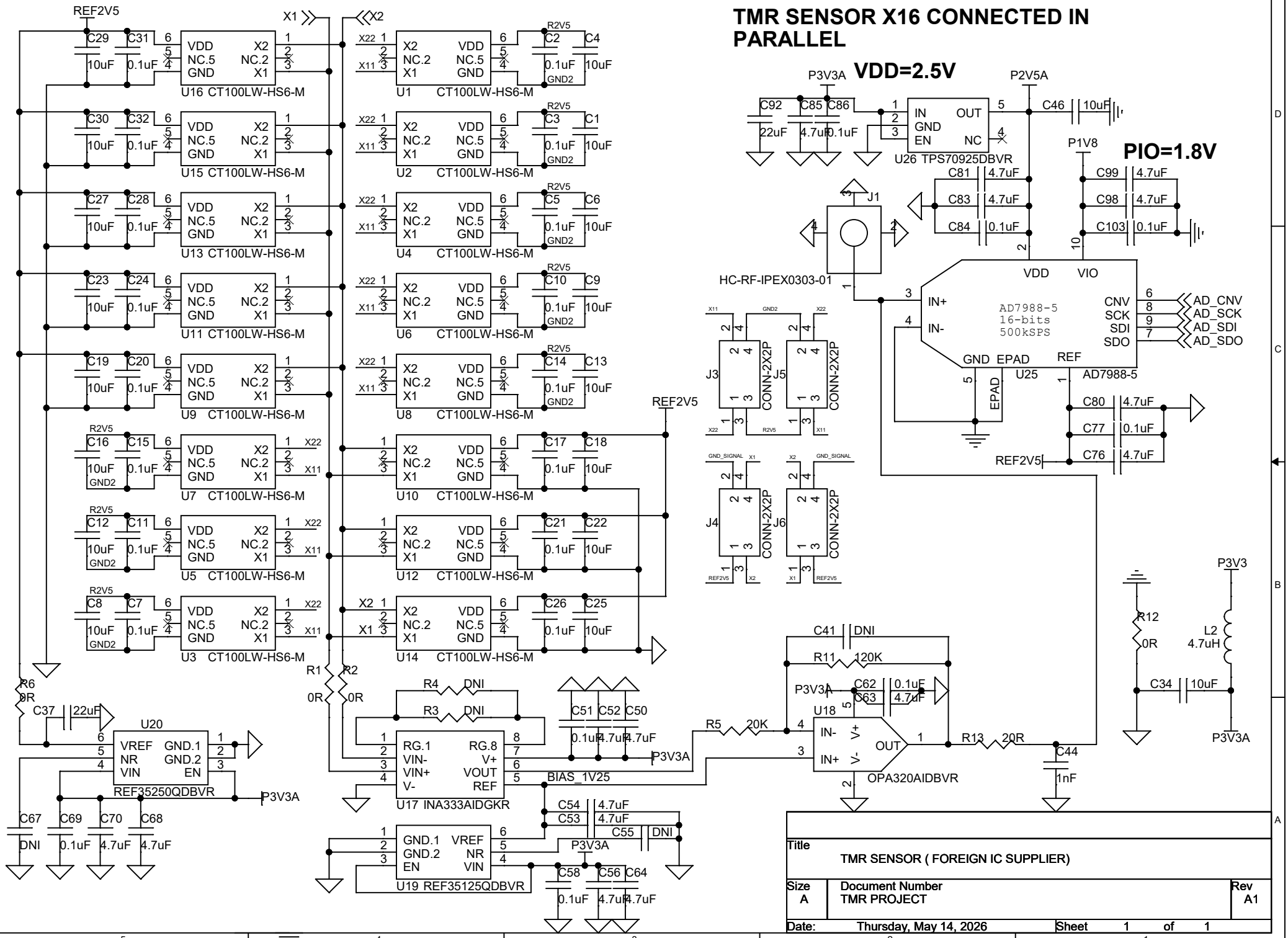


Title
TMR SENSOR ( FOREIGN IC SUPPLIER)

| Size | Document Number | Rev |
|---|---|---|
| A | TMR PROJECT | A1 |

Date: Thursday, May 14, 2026 Sheet 1 of 1

# VIN: 5V~7V

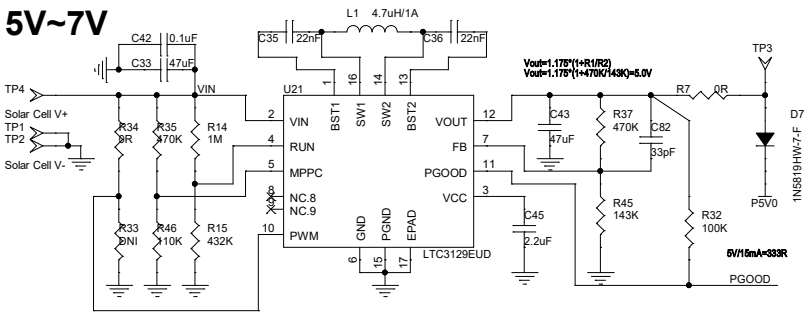


RUN:
pull this pin above 1.1V to enable VCC regulator
and above 1.28V to enable the converter.

**RUN**
**432/(1000+432)*5=1.5V**

**Vin(MPPC)=1.175*(1+R5/R6)**
**=1.175*(1+470K/110K)**
**=6.2V**

**PWM**
**0: Automatic burst mode.**
**1: Fixed PWM mode.**

## BUCK CONVERTER
## 5V->1V2 & 5V->1V8

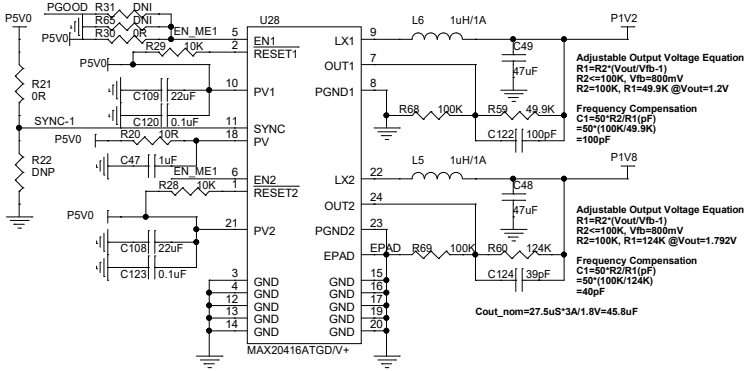


## BUCK CONVERTER
## 5V->3V3 & 5V->2V8

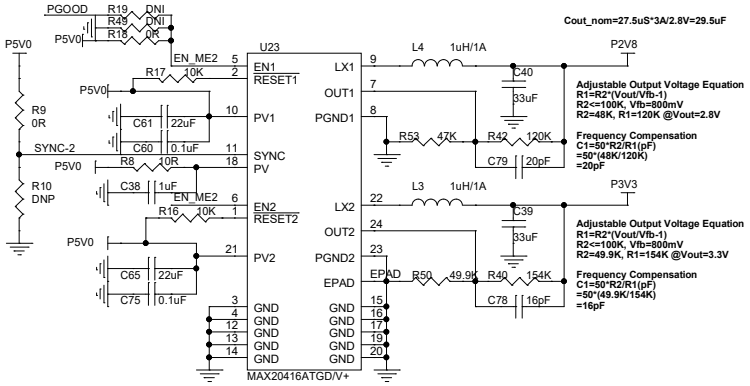


## sysCONFIG Port / Pins

The sysCONFIG pins are dual function,
meaning they can be recovered as user I/O after configuration is complete.

Horizontal-Short to Program Flash
Vertical-Short to Program ICE

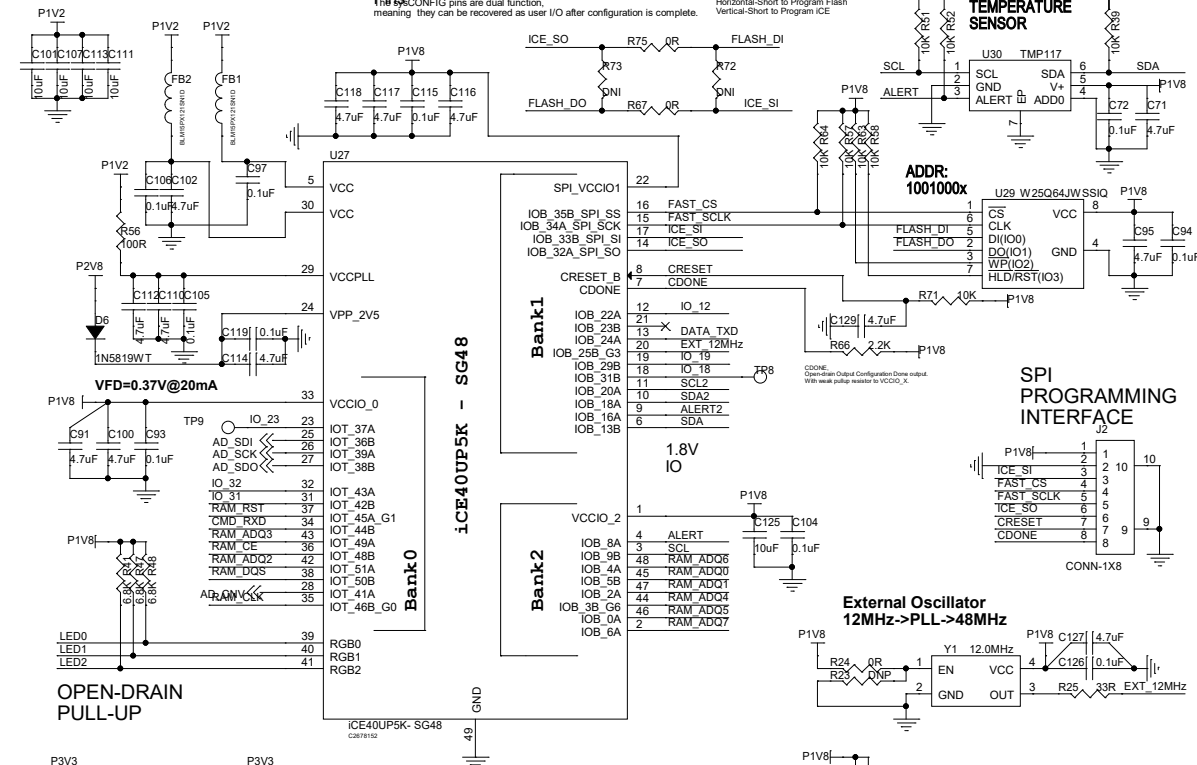


### Using TestPoints to fly-wire LEDs to Front Panel

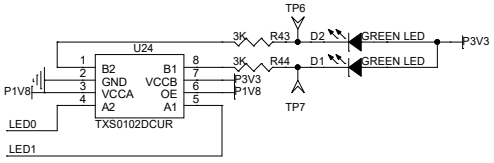


| | | |
|---|---|---|
| Title | CONTINUOUS POWER SUPPLY ADC ACQUISITION MODE | |
| Size A3 | Document Number POF_TMR | Rev A1 |
| Date: Tuesday, May 12, 2026 | Sheet 1 of 1 | |