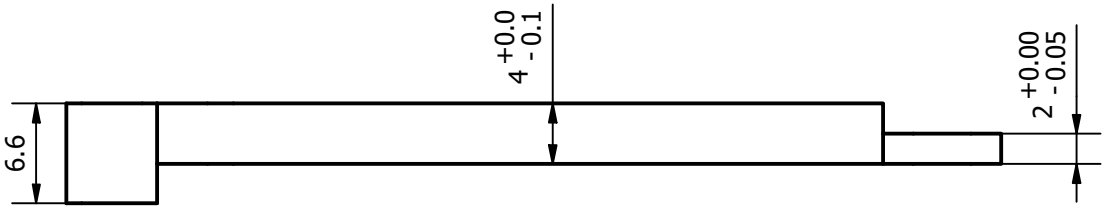

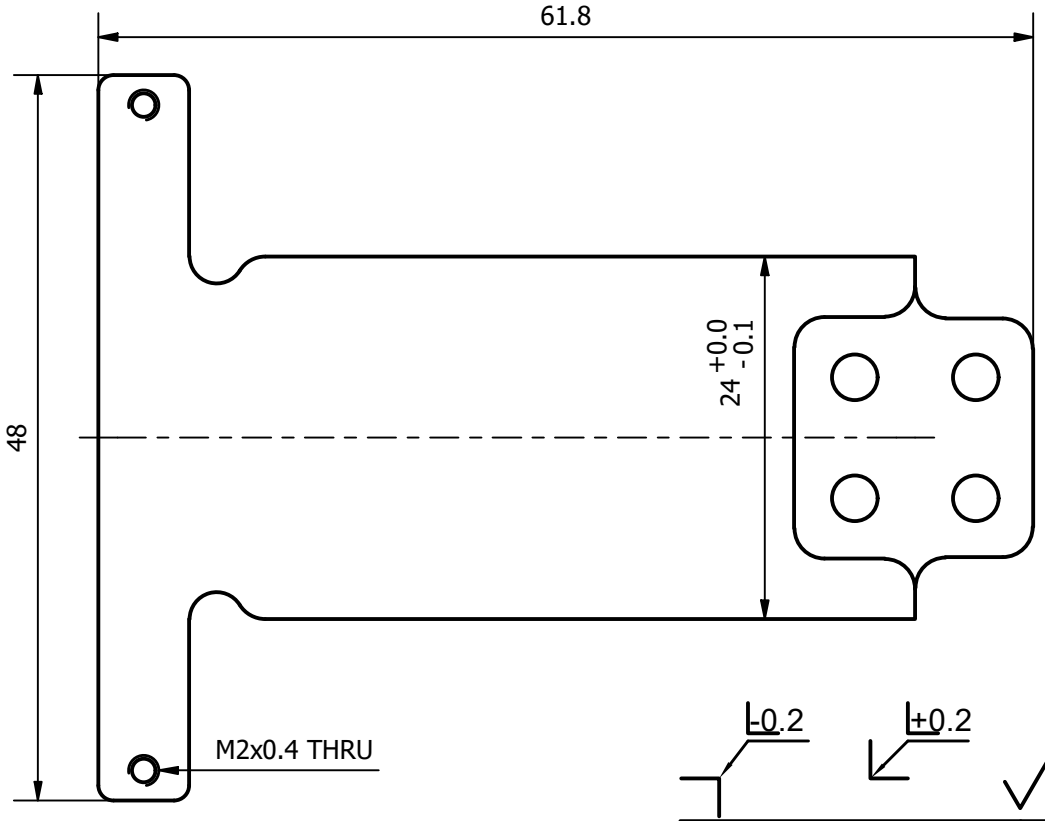

Top (1 : 1)

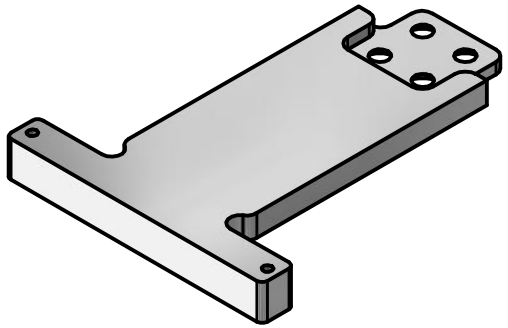

Bottom (1 : 1)

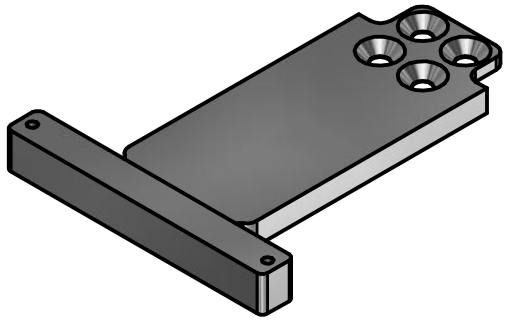

-0.2 +0.2 Rz 25

Designed by A. Ryll Date 08.09.2020	Kicker Chip					
Checked by Date	Part Number 32					
	Edges: ISO 13715	Surfaces: EN ISO 1302	General Tolerances DIN ISO 2768 - mK			
Material EN AW 7075	Scale 2:1	Rev B	Size A4	Sheet 1 /1		

TIGERS DHBW MANNHEIM