# ROMBOUTSWERVEPOLDER: REWETTING WITH WEIRS - WATER QUALITY

World Of Work Integrated Projected 3

DECEMBER 13, 2024

Deepshikha Srivastava
Manisha
Mojde kowkabi
Nafisa Jaffar
Sharmila Majumder

## TABLE OF CONTENTS

**1. INTRODUCTION** ..... 3

1.1 Overview of the Romboutswervepolder and its historical context ..... 3

1.2 Objectives of the report ..... 4

**2. CURRENT CHALLENGES IN ROMBOUTSWERVE POLDER** ..... 4

2.1 Water management issue ..... 4

2.2 Water quality issue due to land use ..... 5

2.3 Weir height and monitoring ..... 5

**3. MEASURES AND TECHNOLOGIES** ..... 6

3.1 Data Interpretation ..... 7

3.2 Weir Implement ..... 12

**4. PROPOSED ACTIONS FOR SUSTAINABLE WATER MANAGEMENT IN THE ROMBOUTSWERVE POLDER** ..... 13

4.1 Peatland Protection and Rewetting ..... 13

4.2 Stakeholder Engagement ..... 14

4.3 Nature-Based Solutions ..... 15

4.4 Adaptive Management ..... 15

**5. POTENTIAL OUTCOMES** ..... 16

5.1 Impacts on biodiversity and ecosystem services ..... 16

5.2 Transition to Water-Retentive Landscapes ..... 16

5.3 Expected improvements in water quality and quantity ..... 16

5.4 Improvement of the relationship between different stakeholders: ..... 17

5.5 Benefits of climate resilience and sustainable farming ..... 17

**6. CONCLUSION** ..... 17

**7. FUTURE RECOMMENDATION** ..... 18

**8. CONTRIBUTIONS** ..... 18

**9. REFERENCES** ..... 19

## LIST OF TABLES

Table 1. Different weir heights and their impacts (Sobhy, 2023) 14
Table 2. Proposed Natural based Solutions and their Impacts 15
Table 3. Project contributions 16

## LIST OF FIGURES

Figure 1: Romboutswervepolder, Flanders 3
Figure 2: Challenges faced in Romboutswervepolder 5
Figure 3: Schematic of the horizontal flux sensor with a) the prepack, consisting of the four filters 6
Figure 4: Illustration of the vertical flux sensor. Retrieved from iFLUX. 7
Figure 5 : Salinity graph of Romboutswervepolder 8
Figure 6: Electric Conductivity graph of Romboutswervepolder 8
Figure 7: Total Dissolved Solids (TDS) graph of Romboutswervepolder 9
Figure 8: PH graph of Romboutswervepolder 10
Figure 9: Dissolved Oxygen graph of Romboutswervepolder 10
Figure 10: Precipitation graph of Romboutswervepolder 11
Figure 11: Existing weir`s Location in Romboutswervepolder 12

# 1. INTRODUCTION

## 1.1 Overview of the Romboutswervepolder and its historical context

Romboutswervepolder is a historical polder with an area of almost 700 ha. It is located in the northwest of the Province of West Flanders on the territory of the cities of Bruges and Damme, in the administrative area of the Oostkustpolder. Enclosed between the dikes of Damse Vaart, the Schipdonkkanaal, and the Koolkerksesteenweg (N374), it houses the Fort van Beieren and the historical city centre of Damme. The polder contains important green areas of the Province of West Flanders and Natuurpunt, which are closely intertwined with land for agricultural use. The Flemish government has designated the entire project area as a European Special Protection Zone (SPA-V) in implementing the European Birds Directive. During the winter, this location is a popular resting spot for specific geese, specifically the brent goose, bean goose, and graylag goose, referred to as freezer geese. Additionally, various typical meadow birds breed in this area, such as lapwings, black-tailed godwits, shovelers, and oystercatchers. Other birds like kestrels, little owls, and marsh warblers also find this environment suitable for nesting.

The central watercourse in the area is the Romboutswerve, a non-navigable watercourse of the second category that originates on the flanks of the Bruges sand ridge. It drains excess water from the city edge and descend rapidly to the peaty pools to the northeast. It cuts through a sandy creek ridge in the middle of the area and then flows north to the Leopold Canal via a siphon under the Schipdonkkanaal. The Romboutswerve can be additionally fed on its way from the Damse Vaart utilizing three inlets (Databank Ondergrond Vlaanderen, 2024).

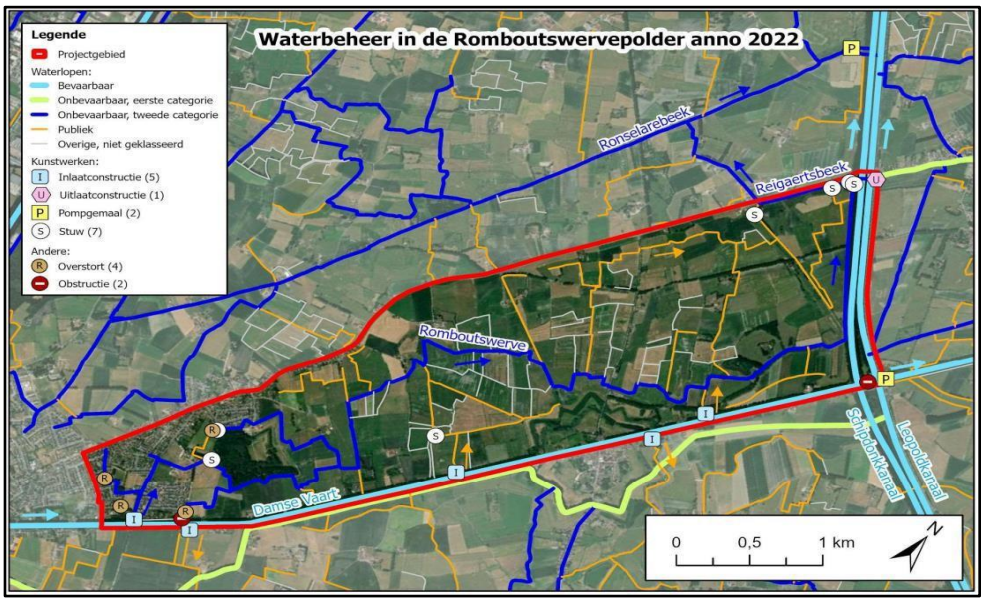


*Figure 1: Romboutswervepolder, Flanders*

### 1.2 Objectives of the report

To tackle the consequences of climate change, an integral optimization of water management in the Romboutswervepolder with attention to diverse land use, drought and flood risks, water quality, cultural-historical landscape, biodiversity, and water experience will be suggested:

- Identify the key challenges related to water management, water quality, and land use in the Romboutswervepolder
- Provide a historical overview of the Romboutswervepolder to understand its ecological significance and find better ways to manage its practices.
- Recommend feasible measures and technologies for sustainable water management that balance agricultural needs with an ecological view
- Highlight the importance of collaboration among stakeholders, including farmers and local authorities, to achieve integrated water management.
- Evaluate the potential impacts of proposed actions on biodiversity, ecosystem services, and water quality.
- Following adaptive management strategies that allow for real-time adjustments based on monitoring data to enhance the resilience of the Romboutswervepolder.
- Provide insights and recommendations to inform policy decisions that promote sustainable practices and protect the ecological integrity of the Romboutswervepolder.

## 2. CURRENT CHALLENGES IN ROMBOUTSWERVE POLDER

Currently, the Romboutswerverpolder is facing several challenges related to water quality and quantity, along with land use, demanding integrated management tactics that consider the needs of both agriculture and natural ecosystems. These challenges are discussed further in detail below, and addressing them requires collaboration among stakeholders, innovative solutions, and monitoring to ensure the sustainability of the area's water resources.

**2.1 Water Management issue:** During winter, the high-level water in Damsevaart maintains the freshwater layer, preventing the saltwater seepage and protecting the peat in the subsoil. But during the summer, the water levels are lowered for agriculture, which leads to the oxidation of peat and saltwater intrusion, which is harmful for the atmosphere and crops. Farmers require lower water levels for agriculture, whereas nature conservatives require stable water levels for the wetland ecosystems and habitats. This difference in demand often creates conflict between agricultural practices and nature conservation efforts. Farmers may prioritize crop production using fertilizers and pesticides and livestock grazing, which can lead to practices that are damaging to local ecosystems. Meanwhile, nature conservationists encourage practices that protect biodiversity and maintain natural habitats. This difference can create tensions between stakeholders.

*Figure 2: Challenges faced in Romboutswervepolder*

**2.2 Water quality issue due to land use:** If the cattle are grazed near the bank of surface water and the manure they produce is not appropriately managed, it can run off into nearby streams, leading to nutrient loading and bad smell in the river. Moreover, the decomposition of manure can deplete oxygen levels in water bodies, creating hypoxic conditions that are harmful to aquatic organisms (Coppens et al., 2016). Also, the farmers use various chemicals for the growth of crops. During heavy rainfall, the nutrient from the agricultural runoff flows into the surface water, increasing the nutrient content in the surface water (Bertels and Willems, 2022). This excess nutrient content can cause eutrophication in the water bodies in the Damsevaart canal, promoting the growth of toxic blue-green algal blooms, making it further unsuitable for irrigation.

**2.3 Weir height and monitoring:** Weir height impacts water level regulation during seasonal groundwater fluctuations, further impacting biodiversity and agricultural practices. For instance, during wet periods, the interaction between surface water and groundwater can lead to dilution of contaminants, whereas in dry periods, higher water levels can sustain better water quality (Karim, 2024). Since the weir height can only be changed manually, monitoring the field plays an important role. Lack of sensors and vertical flux to adjust weir height periodically is a bit of a struggle. Effective monitoring systems are also crucial to tracking the water levels as well as the water quality. The stakeholders are planning to install more weirs but deciding the height of the weir

depending on the needs of the different stakeholders could be challenging.

Overall, the Romboutswervepolder faces a complex interplay of challenges related to water quality, quantity, and land use, necessitating integrated management approaches that consider the needs of both agriculture and natural ecosystems. Addressing these challenges requires collaboration among stakeholders, innovative practices, and ongoing monitoring to ensure the sustainability of the region's water resources.

## 3. MEASURES AND TECHNOLOGIES

The Romboutswervepolder monitoring network incorporates hydrological, water quality, and meteorological sensors to collect real-time data on rainfall intensity, evaporation, water level, salinity, turbidity and wind speed etc. This data is transmitted using radio signals to allow remote accessibility to a center where data assimilation, analysis, and graphical representation are done. The system does the evaluation for critical water level events such as increased salinity and issues warnings to facilitate actions that will minimize dangers such as flooding or low water quality. The network allows for efficient utilization of resources while managing salinity and pollution control, which also enriches the data required for future research and environmental publications.

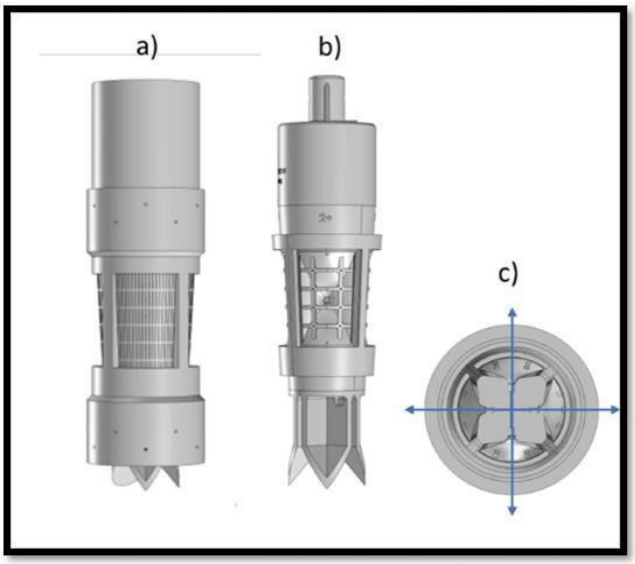


*Figure 3: Schematic of the horizontal flux sensor with a) the prepack, consisting of the four filter screen compartments, b) the sensor probe, and c) a cross section indicating the two microthermal chips to which groundwater is directed. Retrieved from iFLUX.*

*Figure 4: Illustration of the vertical flux sensor. Retrieved from iFLUX.*

**3.1 Data Interpretation:**

Data was collected from the Damme dashboard, which shows various crucial parameters for assessment of water quality over time. The data is for 3 months, from mid-September to mid-December. Data on different parameters were taken from the dashboard, including TDS, electric conductivity, PH, dissolved oxygen, salinity, and rainfall. These are all the important parameters to measure the water quality of the Romboutswervepolder. Below is the interpretation of the data for each parameter.

*Figure 5: Salinity graph of Romboutswervepolder*

The graph represents the salinity of Romboutswervepolder from mid-September to mid-December. The trend started with initial value of 1.24PSU. It decreased a bit but started increasing from mid-September with a little peak between mid-October to early November with a value of 1.74 PSU as the rainfall period in this area begins from November till December which make the evaporation rate higher comparatively leading to increase in the salinity. Again there was a big drop around mid-November to early December with a value of 0.77 PSU, and then started increasing and decreasing till 1st December due to sudden increase in precipitation intensity and then kept increasing for some time and in the end decreased to 1.27PSU. Salinity is the direct measure of dissolved salts and Electric Conductivity.

*Figure 6: Electric Conductivity graph of Romboutswervepolder.*

The graph represents the Electric Conductivity of Romboutswervepolder from mid-September to mid-December, and it has 3 different types of electric conductivities. i) Conductivity, which

measures conductivity at the current water temperature. ii) Conductivity_20 measures the adjusted conductivity as if the water temperature is 20°C. iii) Conductivity_25, considered standard temperature to compare the results internationally or in a scientific paper. Electric Conductivity shows the same trend as Salinity since both parameters are directly connected as salinity is increasing so that more dissolved ions which means more electric conductivity. It has the same drop and peak time as salinity. Initially, if considering all 3 EC types, then the initial value of EC was between 2000 to 2500 µS/cm, and two main peaks were observed after mid-October and before mid-November with a value of 3200 and 3400 µS/cm respectively, and a significant drop after mid-November where conductivity_25 decreased to 1700µS/cm. The observed higher precipitation during this period may have caused the dilution effect.

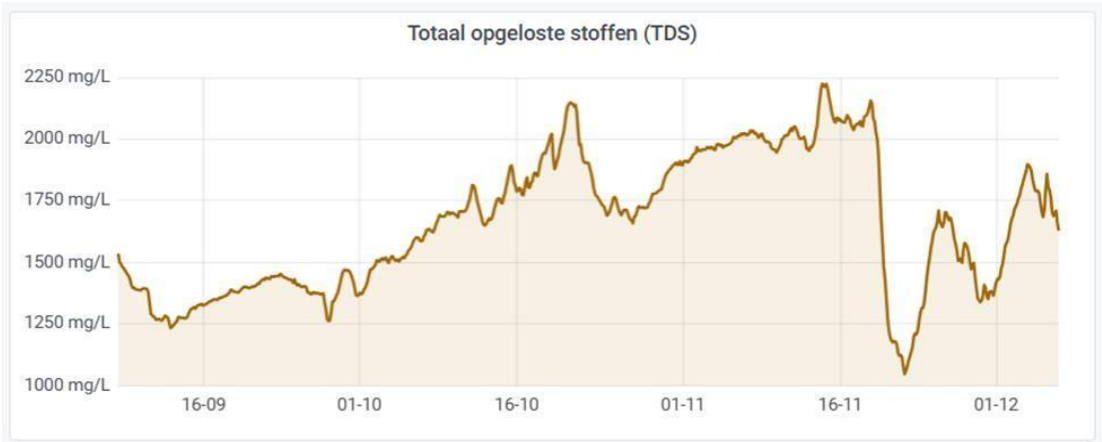


*Figure 7: Total Dissolved Solids (TDS) graph of Romboutswervepolder*

The graph represents the Total Dissolved Solids (TSS) of Romboutswervepolder from mid-September to mid-December. The trend started with an initial value of 1550 mg/L. Similar to salinity and electric conductivity, two main peaks and one drop were observed simultaneously, and this is because of the direct relationship of TDS with EC and salinity. Two main peaks were observed after mid-October and before mid-November, with a value of 2100 mg/L and 2240 mg/L respectively, and a significant drop after mid-November, where the value decreased to1025mg/L is again because of increased rain which fall during this period. As the rainfall increases, it adds to the large volume of low TDS water in the system, and again, dilution occurs, which dilutes the dissolved minerals and spreads them out over a larger volume.

*Figure 8: PH graph of Romboutswervepolder.*

The graph represents the pH of Romboutswervepolder from mid-September to mid-December. From early mid-September to early October, pH increased 2 times, around 7.80 to 7.82. This period was almost dry, which means concentrated ions because of evaporation, causing pH fluctuations due to changes in carbonate and microbial activities. The major trend is from mid-October to early November, before the rainfall starts. The 2 lowest drops were observed just before early November and early December, with a PH value of 7.10, as the first rain can be acidic in nature making the water more acidic than before. When the salinity, EC, and TDS drop, the system is less buffered, and PH is more sensitive to change.

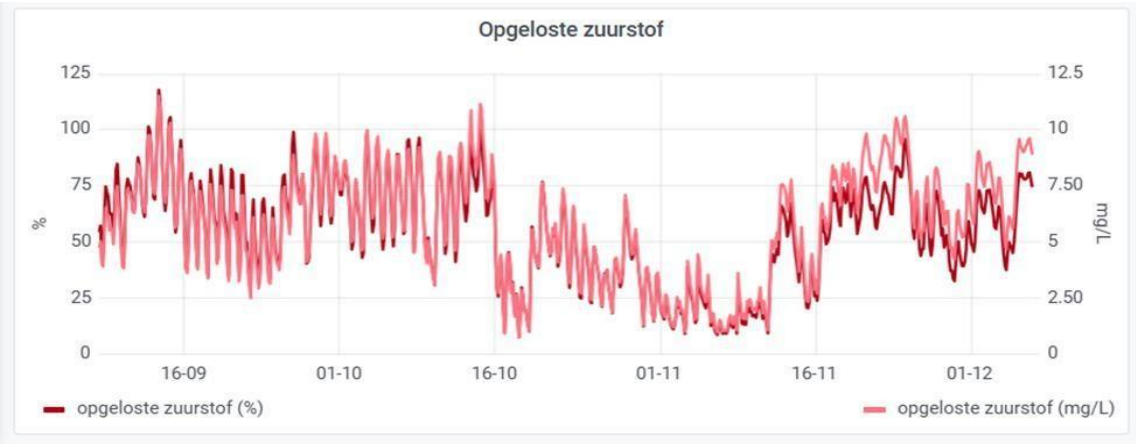


*Figure 9: Dissolved Oxygen graph of Romboutswervepolder.*

The graph represents the dissolved oxygen of Romboutswervepolder from mid-September to mid-December. It has value in mg/l as well as the percentage of saturation. The DO level gradually

increased just before mid-September and increased to 11 mg/L, then gradually decreased and increased. This graph shows two major peaks before mid-September and before mid-October with a value of 12 mg/l and 11 mg/l, respectively. Then it shows a drop just after mid-October, and the value decreased to 0.5 mg/L, and then an increasing and decreasing pattern was observed. After mid-November, there was a change in DO level from 10.5 mg/L to 3 mg/L, and in the end, the value was around 8 mg/L. DO is indirectly related to salinity and TDS. The higher the TDS and salinity, the lower the solubility of oxygen. Rainfall directly influences the DO level by intensifying the mixing and dilution of salts and can bring some organic loads in it with the rainwater runoff. The value may be significantly impacted by biological activity, such as algal blooms, but it also shows that the water is largely unsuitable for aquatic life because the O2 saturation can fall below 5 mg/l, which is lethal to fish and most water animals.

*c*

*Figure 10: Precipitation graph of Romboutswervepolder*

The graph represents the cumulative precipitation graph and precipitation graph of Romboutswervepolder from mid-September to mid-December. The graph indicates that there was a dry period with no or very little rainfall from mid-September to mid-October, followed by a rainy period that began shortly after mid-October and increased to nearly 40mm. After mid-October, the rainfall stabilized until mid-November, then began to increase again until the end of the period, reaching nearly 110mm.

### 3.2 Weir Implement

Romboutswervepolder includes three strategically placed weirs along the Damse Vaart to control water levels and flow (Sobhy, 2024). A siphon beneath the Schipdonkkanaal controls drainage, while an entrance near the Damse Vaart feeds water into the Romboutswerve. Another inlet in the center sandy creek ridge regulates flow through this crucial area. These structures are essential for preserving hydrological balance, reducing salinity, and managing seasonal water-level fluctuations.

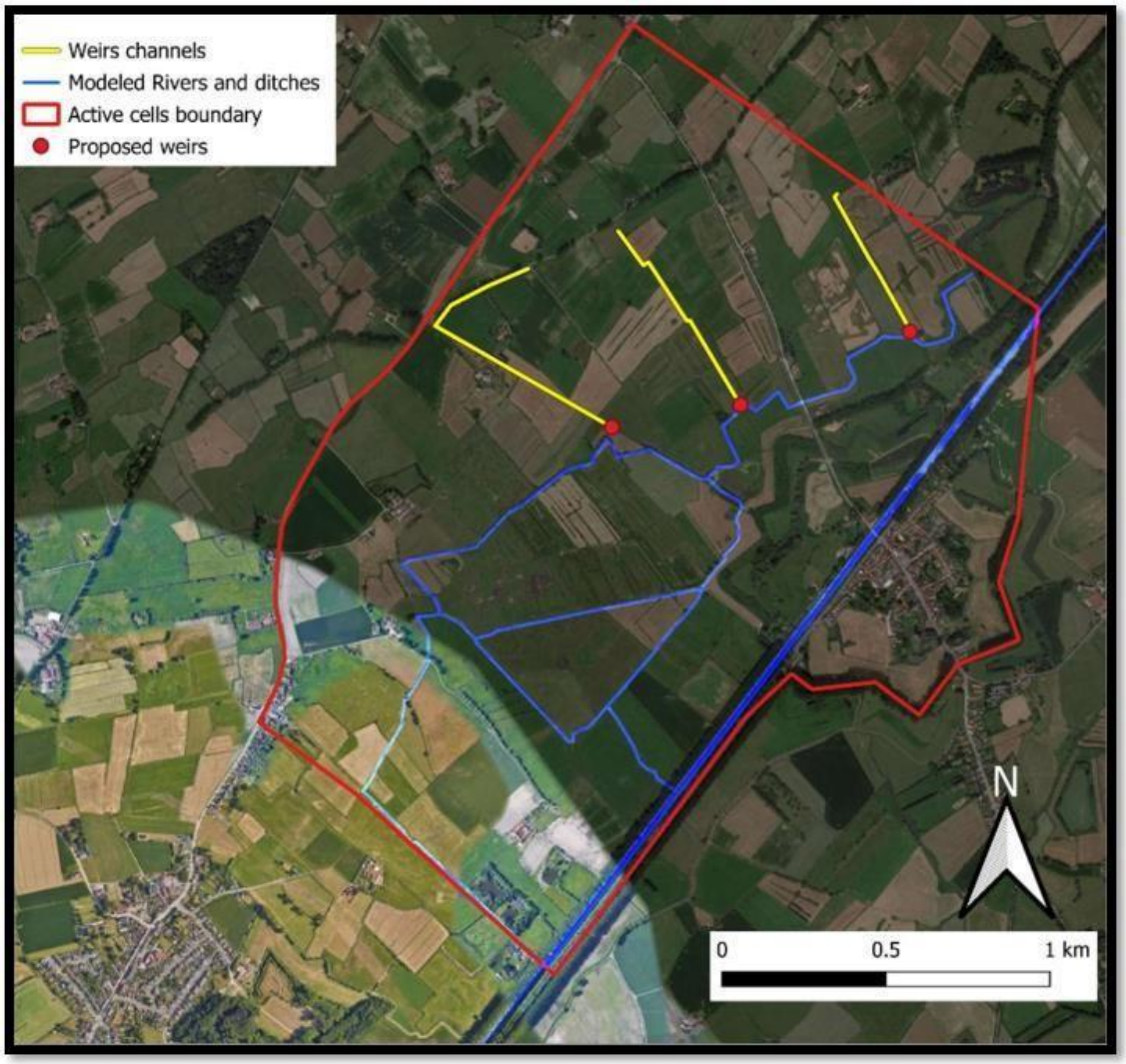


*Figure 11: Existing weir`s Location in Romboutswervepolder (Sobhy, 2023)*

The current weirs in the Romboutswervepolder are essential for controlling water levels and affecting water quality indicators. Their efficiency decreases during severe tidal or precipitation events, but they nevertheless aid in controlling freshwater flow and preserving a steady flow. Conductivity, which rises with dissolved ions, reflects salinity patterns and might not always stop ion accumulation when freshwater inflow is minimal, or salinity is high. It may be possible to lower high conductivity levels, especially during peak salinity, by modifying weir heights and flow rates. Significant variations in dissolved oxygen levels could be detrimental to aquatic life. Hypoxic conditions and stagnant water pockets can result from inadequate water mixing, worsening oxygen deprivation. Increasing conductivity and salinity are correlated with rising Total Dissolved Solids (TDS) levels, indicating that the weirs may not be effectively controlling fertilizer runoff or preventing saltwater incursion. Although the water's neutral pH range indicates that the weirs are not significantly affecting pH management, this could conceal underlying problems with other aspects of water quality. Although weirs are crucial for controlling water flow, they are only as effective if they are not dynamically regulated. Weirs should be modified to enable real-time modifications depending on water quality data. They should also be linked with buffer zones and natural filtering systems to lessen the effects of tidal mixing and agricultural runoff.

## 4. PROPOSED ACTIONS FOR SUSTAINABLE WATER MANAGEMENT IN THE ROMBOUTSWERVE POLDER

The Romboutswerve Polder faces challenges balancing ecological restoration, irrigation, peatland maintenance, and efficient water management. There is a crucial need for practical measures, such as rewetting peatlands and nature-based solutions, to promote stakeholder and farmer collaboration.

### 4.1 Peatland Protection and Rewetting: Maintaining Water Levels above Peat Layers

By rewetting, it is possible to maintain the water table at or above the layers of peat to prevent degradation and dying (Doelman et al., 2023). Maintaining water levels 10-20 cm above the peat layer creates anaerobic conditions that effectively minimize peat oxidation and protect the peatland (Sobhy, 2023).

According to Sobhy (2023), installing weirs controls water levels, helps recharge groundwater and ensures stable hydrological conditions throughout the year. Additionally, dynamic hydrological management systems, including real-time monitoring tools like flux sensors on water levels, allow for timely adjustments to weir heights, ensuring that water levels are adaptively managed based on precise data, preventing excessive drying or waterlogging. Solar-powered pumps can provide water to the disconnected channels and avoid water loss during dry periods. Vegetation buffers along drainage channels can slow the water flow and increase infiltration, providing a secondary method for stabilizing water levels.

*Table 1. Different weir heights and their impacts (Sobhy, 2023)*

| Section | Detail | Specific Heights and Impacts |
|---|---|---|
| **Overview of Weir Height Adjustments** | Optimizes water retention, flow control, and recharge. | - **0 m**: Baseline |
| | | - **0.25 m**: Wet season drainage |
| | | - **0.5 m**: Spring/summer recharge |
| | | - **0.75 m**: Drought management, salinity, and biodiversity balance |
| **How We Adjust Weir Heights** | Dynamic adjustments are made using manual or automated systems that rely on real-time data. | - **0.25 m**: Minimal retention |
| | | - **0.5 m**: Moderate retention |
| | | - **0.75 m**: Maximum retention |
| **Groundwater Monitoring** | Monitors groundwater levels, salinity, and flow with sensors. | Adjusts weirs to retain or release water as needed. |
| **Seasonal Adjustments** | Specific settings for summer and winter to manage ecological and water needs. | - **Summer**: Higher settings (0.5–0.75 m) |
| | | - **Winter**: Lower settings (0–0.25 m) |
| **Why These Heights Were Selected** | Scientific, ecological, and agricultural rationales guide height choices. | - **0.5 m**: Increases groundwater |
| | | - **0.75 m**: Maximizes retention but risks flooding |
| | | - **0–0.25 m**: Ensures flow in wet seasons |
| **Ecological Benefits** | Aims to preserve natural habitats and reduce carbon emissions. | - Prevents oxidation |
| | | - Supports diverse species |
| | | - Reduces $CO_2$ emissions |
| **Agricultural Needs** | Aligns weir heights with irrigation and crop protection needs. | - Higher settings ensure water supply |
| | | - Lower settings prevent waterlogging |

Draining peatland releases CO2 by exposing organic matter to oxygen, whereas rewetting prevents the emission by creating anaerobic conditions that stop microbial decomposition, preserving the carbon stored within the peat layer (Doelman et al., 2023; Asif et al., 2024). Modeling data from Sobhy's thesis suggests that weirs elevate groundwater levels by up to 70 cm during dry seasons, and they help reduce CO2 emissions while mitigating salinization and improving water quality. Furthermore, these measures align with the regional goals, such as the Blue Deal. Carbon farming initiatives offer economic incentives to landowners to preserve peatlands as carbon sinks, creating a direct financial rationale for conservation efforts.

### 4.2 Stakeholder Engagement

Stakeholder engagement includes partnerships with local officials, farmers, and land management organizations like Natuurpunt. To control water height, farmers and other users need to know about the effects of water levels. The province requires data-driven information for practical implementation. Changes in nitrogen runoff and water levels directly impact farmers who use the land for grazing and hay production. Therefore, cooperation and open communication are essential. Furthermore, controlling nitrogen runoff from farmlands into the Romboutswerve River is crucial in preserving water quality, emphasizing the necessity of policies that balance the goals of agricultural operations with environmental preservation.

Conservationists and authorities must offer educational support to bridge the knowledge gap and ensure practical solutions; the involvement of farmers in the stakeholders' decision-making process creates a sense of ownership and accountability and emphasizes that farmers' input is critical in designing and determining optimal weir height. Open communication builds trust among stakeholders that promotes long-term cooperation.

### 4.3 Nature-Based Solutions

*Table 2. Proposed Nature-based Solutions and their Impacts*

| Proposed Measure | Benefits |
|---|---|
| Establish buffer zones and vegetation strips along waterways. | Reduce nutrient runoff and sedimentation and improve water quality. |
| Create wetlands at strategic locations. | Filter contamination, reduce nutrient loads, and provide habitats for wildlife. |
| Restore riparian vegetation to stabilize soils and reduce erosion. | Enhances habitat connectivity and supports biodiversity. |

Effective natural ways to lower nutrient runoff and enhance water quality include buffer zones and vegetation strips. These vegetative barriers absorb excess nutrients and trap sediments before they enter waterways. Planting native wetland vegetation in the Romboutswerve Polder complements rewetting efforts by boosting biodiversity and bolstering hydrological stability (Schneider et al., 2024). These actions give species that depend on wetland ecosystems vital habitats and are in line with European conservation directives.

Nature-based solutions improve ecosystem resilience by increasing soil stability, promoting water infiltration, and assisting pollinator populations. These interventions reduce risks such as soil erosion and salinization to create a balanced environment that supports ecological health and agricultural output (Asif et al., 2024). The Romboutswerve Polder displays a long-term strategy for peatland restoration by including these measures in the water management system.

### 4.4 Adaptive Management

Adaptive management uses iterative modifications to ensure that interventions achieve the intended outcomes. Post-installation testing of weirs in the Romboutswerve Polder through field trials and water levels are monitored to ensure that the structures maintain optimal hydrological conditions without causing an unintended ecological impact. Sobhy's findings suggest using incremental adjustments and field-based validation to optimize water levels while minimizing unintended impacts like flooding.

Nutrient runoff from fields causes a risk of eutrophication, and oxygen depletion can affect biodiversity (Schneider et al., 2024), so maintaining water quality is essential for ecosystem health and hydrological stability. The Romboutswerve Polder multi-parameter probes provide real-time data, enabling immediate intervention to address issues such as eutrophication.

## 5. POTENTIAL OUTCOMES:

### 5.1 Impacts on biodiversity and ecosystem services:

The Romboutswervepolder contains different biodiversity and ecosystem services. Rewetting the peatland prevents soil oxidation and greenhouse gases, and nature-based solutions like planting native wetland vegetation also impact biodiversity maintenance. This open polder landscape is one of the valuable territories for meadow birds, waterfowl, and reed birds. Rewetting the polder is important for biodiversity, especially for the species that thrive in wet nature. It prevents degradation of the peatland and contributes to maintaining high water levels. High water level leads to a wetland situation that is beneficial for certain species such as marsh vegetation, lapwings, and black-tailed godwits. Moreover, providing water in ditches and canals will help to prevent drought, which is one of the main reasons for growing undesirable willow or alder. The Romboutswervepolder is a valuable landscape with great heritage value. It provides ecosystem services with agricultural production, nature development, and recreational needs. Sustainably maintaining this polder will lead to achieving optimal relations between different ecosystem services.

### 5.2 Transition to Water-Retentive Landscapes:

Recent studies show that Romboutswerve is draining instead of irrigating. This hampers the initial objective of the waterboard, which is to let the water in the Romboutswerve irrigate the polder. Under the increasing climate extremes, water retention in the polder to buffer droughts and improve groundwater recharge is necessary. Creating wetlands will temporarily store water during the wet season and release it slowly. Implementing weirs at different heights will help control water flow and retain water during the dry season. Plantation of vegetation strips and drought-resilient crops will encourage infiltration and help the polder function more like a sponge.

### 5.3 Expected improvements in water quality and quantity:

The benefit of adaptive management in weir implementation in Romboutswervepolder is huge. Adaptive management of weirs will help to stabilize water levels and flow. It also helps to increase water quality and quantity in the polder. Monitoring networks with different sensors and multiparameter probes provides live updates regarding water conditions to put good-quality water as high as possible in the polder. Implementing multi-parameter probes creates a better monitoring system to prevent eutrophication and nutrient run-off. Introducing fresh water through canals and weirs will increase the water quality in the polder. Better adaptive management will sustainably reduce blue-green algae in the water. Rewetting the polder will make the water level high, which will prevent salt intrusion into the polder.

### 5.4 Improvement of the relationship between different stakeholders:

The engagement of different stakeholders will help to improve the relationship among the stakeholders. It will resolve many conflicts and also destroy misunderstandings nip in the bud between many stakeholders. Sharing knowledge, ideas, and different points of view will lead to more sustainable ecosystem management and strengthen the bond between nature and people. Collaboration between them will improve the balance between natural and sustainable agriculture and water management. Moreover, effective collaboration among the partners can solve the different crises present in the polder in a very short period.

### 5.5 Benefits of climate resilience and sustainable farming

Drought and flooding with extreme precipitation events pose challenges in the agriculture of the polder. Thus, the importance of climate resilience and sustainable farming is increasing in the Romboutswerve polder. Excessive wet and dry conditions cause disease outbreaks, reduce workability, and create salt intrusion in the polder. Buffer zones, vegetation strips, and creating space to collect excessive water during extreme precipitation to maintain the water table and reduce the effect of drought will develop climate resilience and sustainable farming. These nature-based solutions will prevent soil erosion, nutrient loss, and algal bloom in the water and will help to increase adaptation capacity during climate change and create the scope for more sustainable agriculture in the polder.

## 6. CONCLUSION

The Romboutswerve is one of the oldest polders in Flanders, Belgium. It has its own rich history with important heritage as well as ecological values. However, nowadays it is facing many challenges due to climate change and human activities. These challenges pose a threat to water quality and quantity, biodiversity, agricultural activities, and human living in this area. However, implementing weirs and monitoring both groundwater and surface water flow, measuring water quality and quantity, and adapting both water and land management in a sustainable way for both agricultural production and ecosystem restoration are crucial to mitigating these threats. Without these steps, situations can further worsen. The current water landscape project is proceeding towards its goals to overcome the adverse situation step by step. This report is also giving some further detailed solutions to tackle the issues. However, strengthening landscape identity and policies to maintain this polder should be further examined. This will lead to a better understanding of the nature and history of the Romboutswerver polder and the importance of maintaining its ecosystem in a sustainable way. Appropriate policymaking with the engagement of different stakeholders will be more effective to further protect this beautiful landscape.

## 7. FUTURE RECOMMENDATION

To achieve all the objectives of the Blue Deal project for the Romboutswervepolder, the following steps should be taken:

a. Dynamic weir management should be done to allow real-time adjustment.
b. Development of centralized monitoring sensors for better understanding of the water quality.
c. Establishment of a participatory decision-making framework to engage farmers, stakeholders and environmentalists.
d. Development of new policies keeping farmers' needs and environmentalist points of view in mind.

## 8. CONTRIBUTIONS

The table below indicates the contribution of each member of the group for this work:

*Table 3. Project contributions*

| **Name** | **Section** |
|---|---|
| Deepshikha Srivastava | Current challenges in Romboutswerve Polder and Future recommendations |
| Manisha | Measures and Technologies |
| Mojdeh Kokabi | Introduction |
| Nafisa Jaffar | Proposed actions for sustainable water management |
| Sharmila Majumdar | Potential outcomes and Conclusion |

## 9. REFERENCES


1. Actualisatie van de Biologische waarderingskaart en Natura 2000- habitatkaart van de Romboutswervepolder te Damm.
2. Asif, T., Rochefort, L., Freeman, C., Dunn, C., & Guêné-Nanchen, M. Peatland Geoengineering: Testing an Approach to Limit Carbon Dioxide Emissions Under Enzymic Latch Mechanism in Post-Extracted Unrestored Peatlands. *Available at SSRN 4960287*.
3. Bertels, D., & Willems, P. (2022). Climate change impact on salinization of drinking water inlets along the Campine Canals, Belgium. *Journal of Hydrology: Regional Studies*, *42*, 101129.
4. Coppens, J., Meers, E., Boon, N., Buysse, J., & Vlaeminck, S. E. (2016). Follow the N and P road: high-resolution nutrient flow analysis of the Flanders region as precursor for sustainable resource management. *Resources, Conservation and Recycling*, *115*, 9-21.
5. Databank Ondergrond Vlaanderen. Accessed by 31/11/2024 https://www.dov.vlaanderen.be/
6. Doelman, J. C., Verhagen, W., Stehfest, E., & van Vuuren, D. P. (2023). The role of peatland degradation, protection and restoration for climate change mitigation in the SSP scenarios. *Environmental Research: Climate*, *2*(3), 035002.
7. FluxSense. (n.d.). *FluxSense dashboard*. FluxSense. https://dashboard.fluxsense.app/
8. https://www.regionalelandschappen.be/
9. Koppensteiner, W., Wegmann, J., Laggner, A., & Tiemeyer, B (2023). Potential for peatland rewetting in Germany: A nationwide landscape analysis.
10. Romboutswervepolder. 2024. Vlaamse Land Maatschappij. Accessed in 29/11/2024.
11. Schneider, P., Fauk, T., Mihai, F. C., Junker, H., Ettmer, B., & Lüderitz, V. (2024). Natural Climate Protection through Peatland Rewetting: A Future for the Rathsbruch Peatland in Germany. *Land*, *13*(5), 581.
12. SDG report of the Flemish provinces, cities and municipalities.
13. Sobhy , K. M. (2023). *Rewetting of the Romboutswervepolder, Bruges, Belgium: Estimating the effect of weirs installation on the groundwater system* [Master's Thesis].
14. Tröltzsch, J., Vidaurre, R., Bressers, H., Browne, A., La Jeunesse, I., Lordkipanidze, M., ... & Cauwenberghs, K. (2016). Flanders: regional organization of water and drought and

using data as driver for change. *Governance for Drought Resilience: Land and Water Drought Management in Europe*, 139-158.

15. Van Gossum, P., Ledene, L., Arts, B., De Vreese, R., & Verheyen, K. (2008). Implementation failure of the forest expansion policy in Flanders (Northern Belgium) and the policy learning potential. *Forest Policy and Economics*, *10*(7-8), 515-522.
16. Water-Land-Schap Project. (2023). Romboutswervepolder: Challenges and Measures.