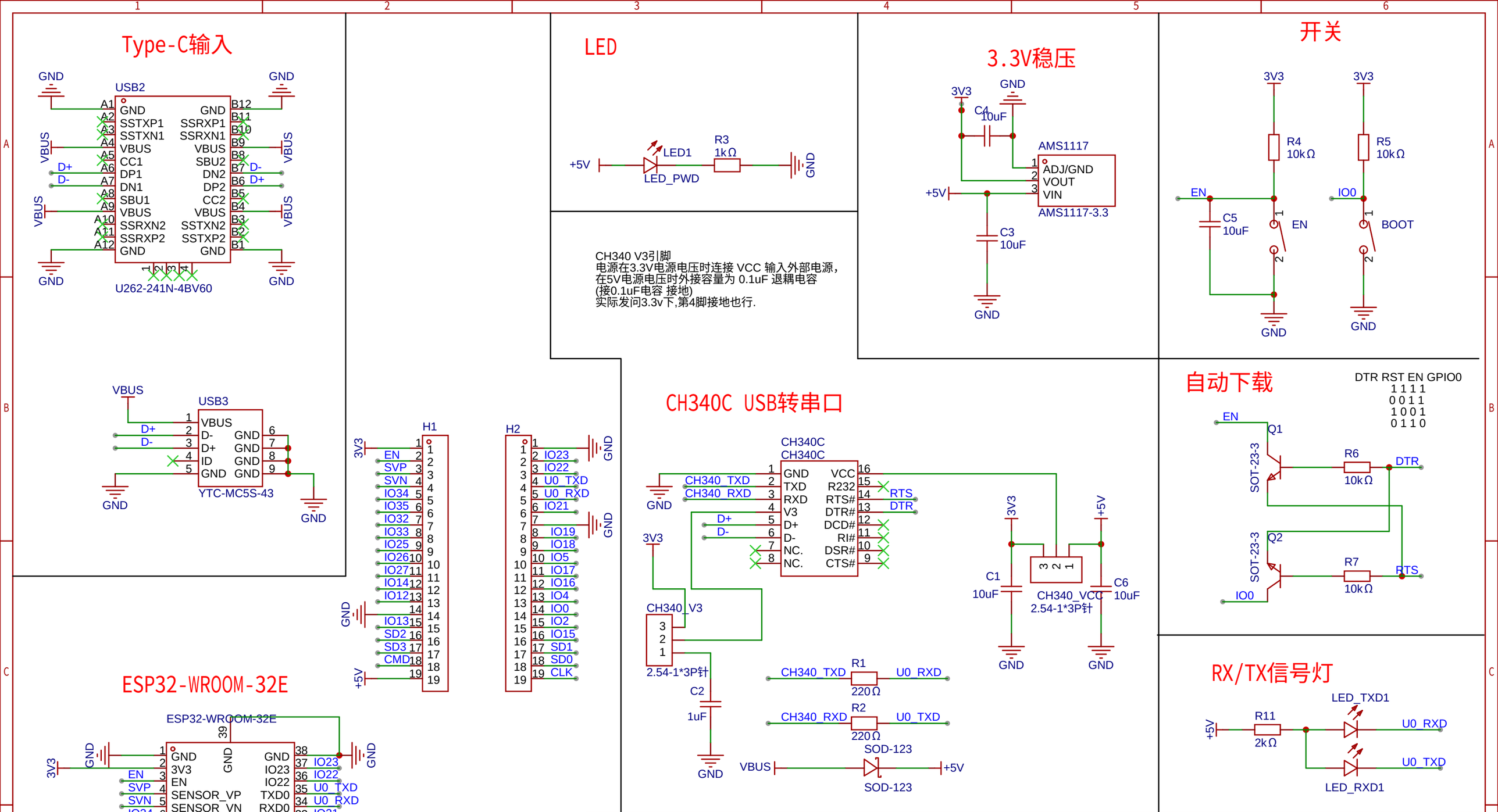

Schematic	ESP32-WROOM-32E-v1.1	Update Date	2023-04-17
		Create Date	2023-04-09
Page	P1	Part Number	
Drawed		ESP32-WROOM-32E	
Reviewed			
		VER	SIZE	PAGE 1 OF 1
		V1.0	A4	嘉立创EDA