Num	PAGE
01	01-Title.SchDoc
02	02-JTAG.SchDoc
03	03-Bank12_13_14_15.SchDoc
04	04-Bank16_17_18.SchDoc
05	05-Bank32_33_34.SchDoc
06	06-GTX.SchDoc
07	07-Bank_POWER.SchDoc
08	08_HDMI.SchDoc
09	09-DDR01.SchDoc
10	10-DDR02.SchDoc
11	11_ETH.SchDoc
12	12_UART.SchDoc
13	13_LED&KEY.SchDoc
14	14-VGA.SchDoc
15	15-USBX4.SchDoc
16	16-SW8x8.SchDoc
17	17-DebugIO.SchDoc
18	18-Power.SchDoc

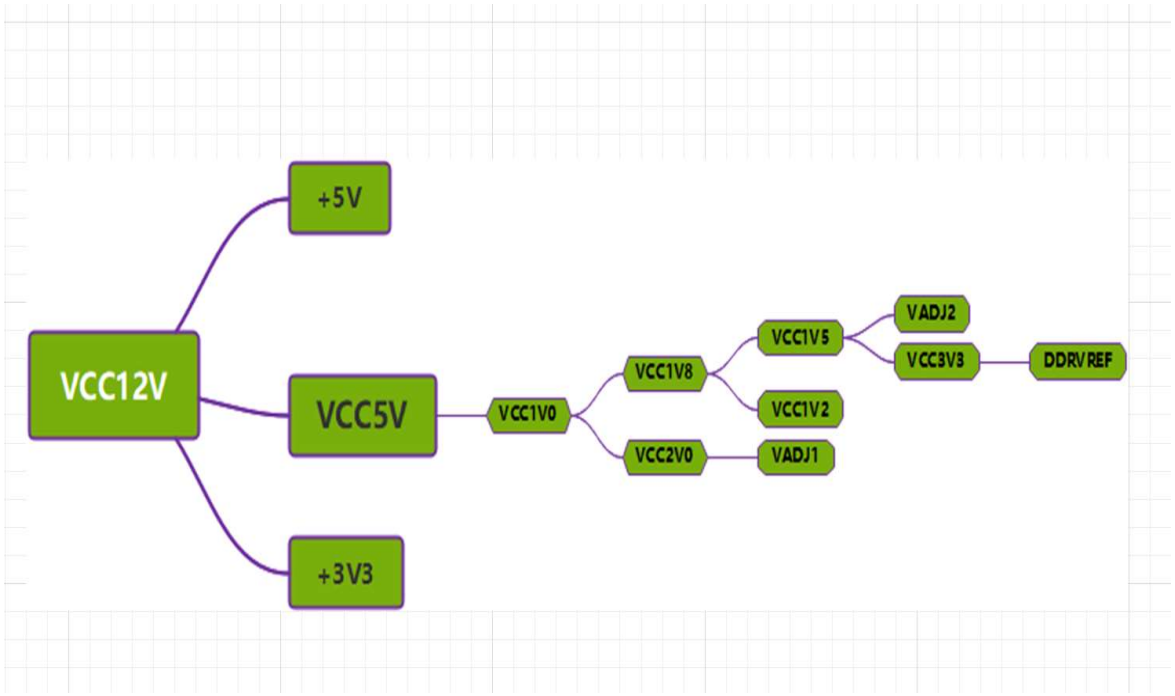

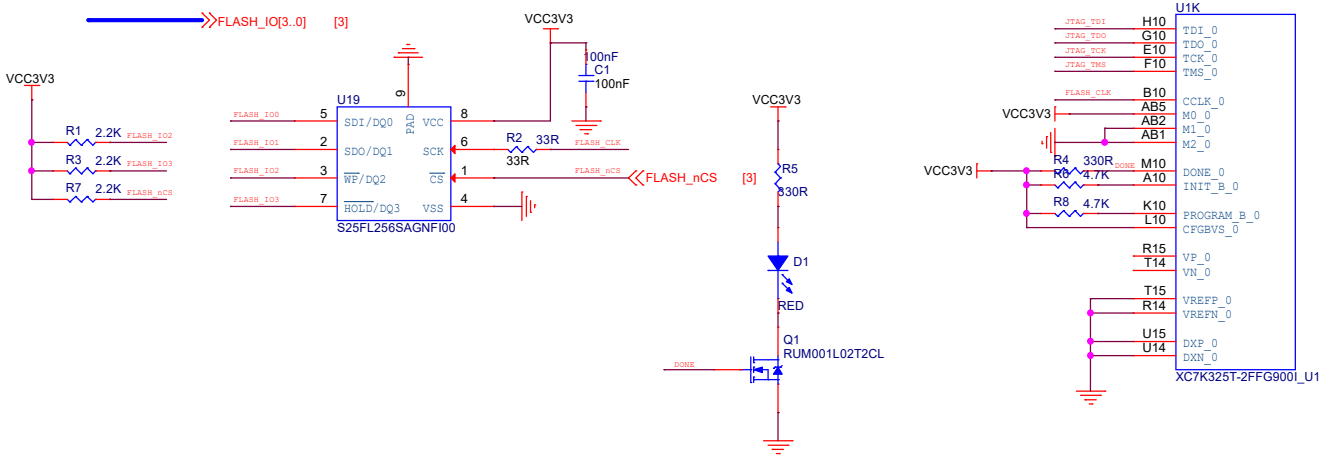

JTAG Connector

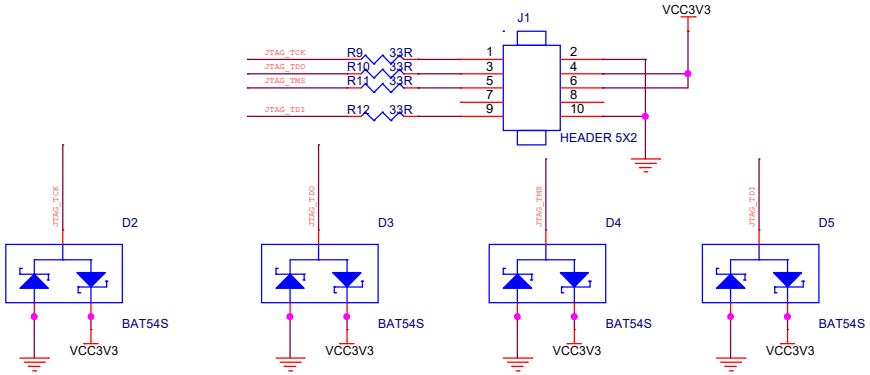

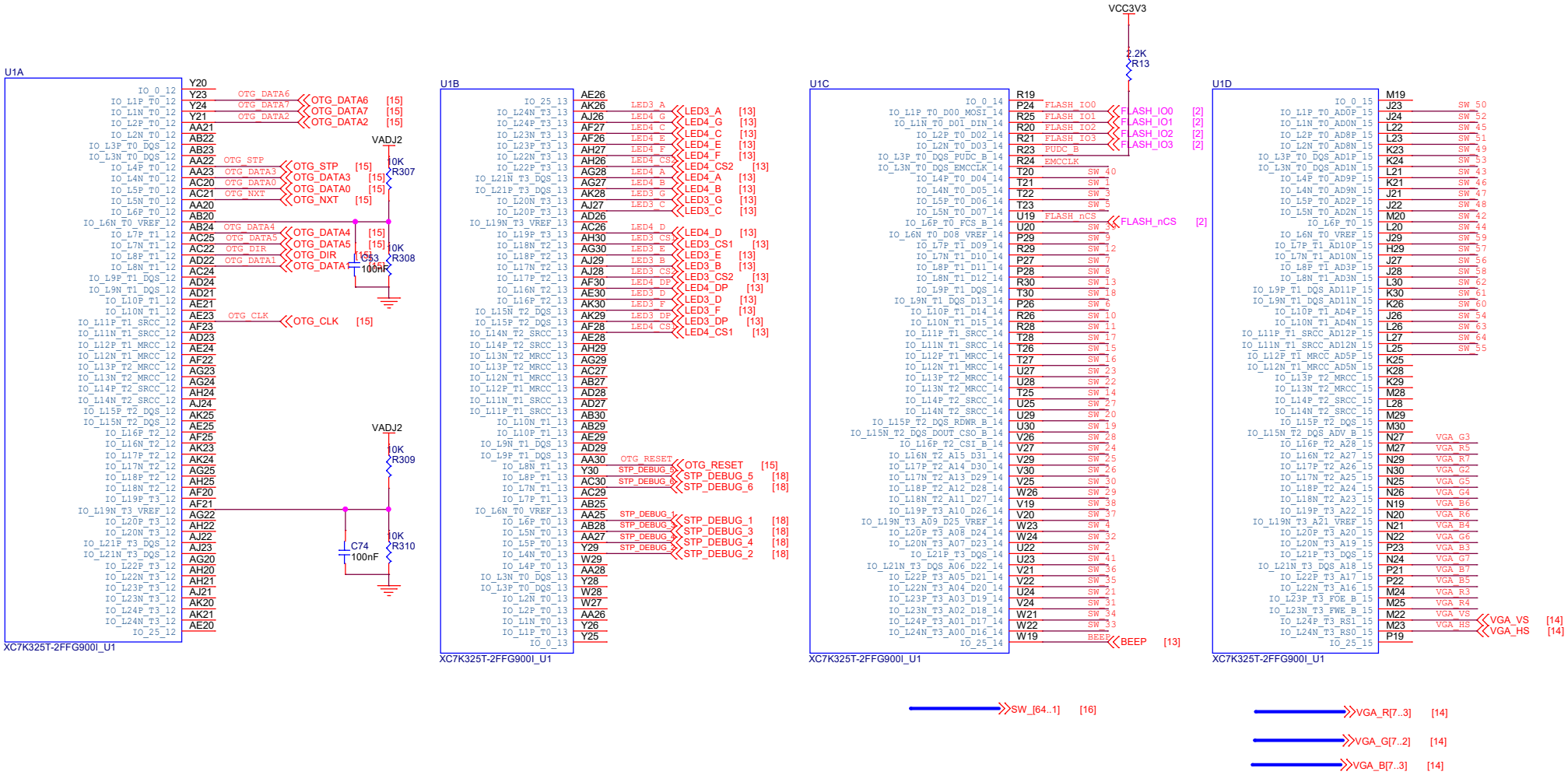
U1A
XC7K325T-2FFG900I_U1
Y20
Y23 OTG_DATA6 OTG_DATA6 [15]
Y24 OTG_DATA7 OTG_DATA7 [15]
Y21 OTG_DATA2 OTG_DATA2 [15]
AA21
AB22
AB23
AA22 OTG_STP OTG_STP [15]
AA23 OTG_DATA3 OTG_DATA3 [15]
AC20 OTG_DATA0 OTG_DATA0 [15]
AC21 OTG_NXT OTG_NXT [15]
AA20
AB20
AB24 OTG_DATA4 OTG_DATA4 [15]
AC25 OTG_DATA5 OTG_DATA5 [15]
AC22 OTG_DIR OTG_DIR [15]
AD22 OTG_DATA1 OTG_DATA1 [15]
AC24
AD24
AD21
AE21
AE23 OTG_CLK OTG_CLK [15]
AF23
AD23
AE24
AF22
AG23
AG24
AH24
AJ24
AK25
AE25
AF25
AK23
AK24
AG25
AH25
AF20
AF21
AG22
AH22
AJ22
AJ23
AG20
AH20
AH21
AJ21
AK20
AK21
AE20
VADJ2
10K R307
10K R308
C53 100nF
VADJ2
10K R309
10K R310
C74 100nF
U1B
XC7K325T-2FFG900I_U1
AE26
AK26 LED3_A LED3_A [13]
AJ26 LED4_G LED4_G [13]
AF27 LED4_C LED4_C [13]
AF26 LED4_E LED4_E [13]
AH27 LED4_F LED4_F [13]
AH26 LED4_CS2 LED4_CS2 [13]
AG28 LED4_A LED4_A [13]
AG27 LED4_B LED4_B [13]
AK28 LED3_G LED3_G [13]
AJ27 LED3_C LED3_C [13]
AD26
AC26 LED4_D LED4_D [13]
AH30 LED3_CS LED3_CS1 [13]
AG30 LED3_E LED3_E [13]
AJ29 LED3_B LED3_B [13]
AJ28 LED3_CS LED3_CS2 [13]
AF30 LED4_DP LED4_DP [13]
AE30 LED3_D LED3_D [13]
AK30 LED3_F LED3_F [13]
AK29 LED3_DP LED3_DP [13]
AF28 LED4_CS LED4_CS1 [13]
AE28
AH29
AG29
AC27
AB27
AD28
AD27
AB30
AB29
AE29
AD29
AA30 OTG_RESET OTG_RESET [15]
Y30 STP_DEBUG_5 STP_DEBUG_5 [18]
AC30 STP_DEBUG_6 STP_DEBUG_6 [18]
AC29
AB25
AA25 STP_DEBUG_1
AB28 STP_DEBUG_1 STP_DEBUG_1 [18]
AA27 STP_DEBUG_3 STP_DEBUG_3 [18]
Y29 STP_DEBUG_4 STP_DEBUG_4 [18]
W29 STP_DEBUG_2 STP_DEBUG_2 [18]
AA28
Y28
W28
W27
AA26
Y26
Y25
U1C
XC7K325T-2FFG900I_U1
VCC3V3
2.2K R13
R19
P24 FLASH_IO0 FLASH_IO0 [2]
R25 FLASH_IO1 FLASH_IO1 [2]
R20 FLASH_IO2 FLASH_IO2 [2]
R21 FLASH_IO3 FLASH_IO3 [2]
R23 FUDC_B
R24 EMCCLK
T20 SW_40
T21 SW_1
T22 SW_3
T23 SW_5
U19 FLASH_nCS FLASH_nCS [2]
U20 SW_39
P29 SW_9
R29 SW_12
P27 SW_7
P28 SW_8
R30 SW_13
T30 SW_18
P26 SW_6
R26 SW_10
R28 SW_11
T28 SW_17
T26 SW_15
T27 SW_16
U27 SW_23
U28 SW_22
T25 SW_14
U25 SW_27
U29 SW_20
U30 SW_19
V26 SW_28
V27 SW_24
V29 SW_25
V30 SW_26
V25 SW_30
W26 SW_29
V19 SW_38
V20 SW_37
W23 SW_4
W24 SW_32
U22 SW_2
U23 SW_41
V21 SW_36
V22 SW_35
U24 SW_21
V24 SW_31
W21 SW_34
W22 SW_33
W19 BEEP BEEP [13]
U1D
XC7K325T-2FFG900I_U1
M19
J23 SW_50
J24 SW_52
L22 SW_45
L23 SW_51
K23 SW_49
K24 SW_53
L21 SW_43
K21 SW_46
J21 SW_47
J22 SW_48
M20 SW_42
L20 SW_44
J29 SW_59
H29 SW_57
J27 SW_56
J28 SW_58
L30 SW_62
K30 SW_61
K26 SW_60
J26 SW_54
L26 SW_63
L27 SW_64
L25 SW_55
K25
K28
K29
M28
L28
M29
M30
N27 VGA_G3
M27 VGA_R5
N29 VGA_R7
N30 VGA_G2
N25 VGA_G5
N26 VGA_G4
N19 VGA_B6
N20 VGA_R6
N21 VGA_B4
N22 VGA_G6
P23 VGA_B3
N24 VGA_G7
P21 VGA_B7
P22 VGA_B5
M24 VGA_R3
M25 VGA_R4
M22 VGA_VS VGA_VS [14]
M23 VGA_HS VGA_HS [14]
P19
SW_[64..1] [16]
VGA_R[7..3] [14]
VGA_G[7..2] [14]
VGA_B[7..3] [14]

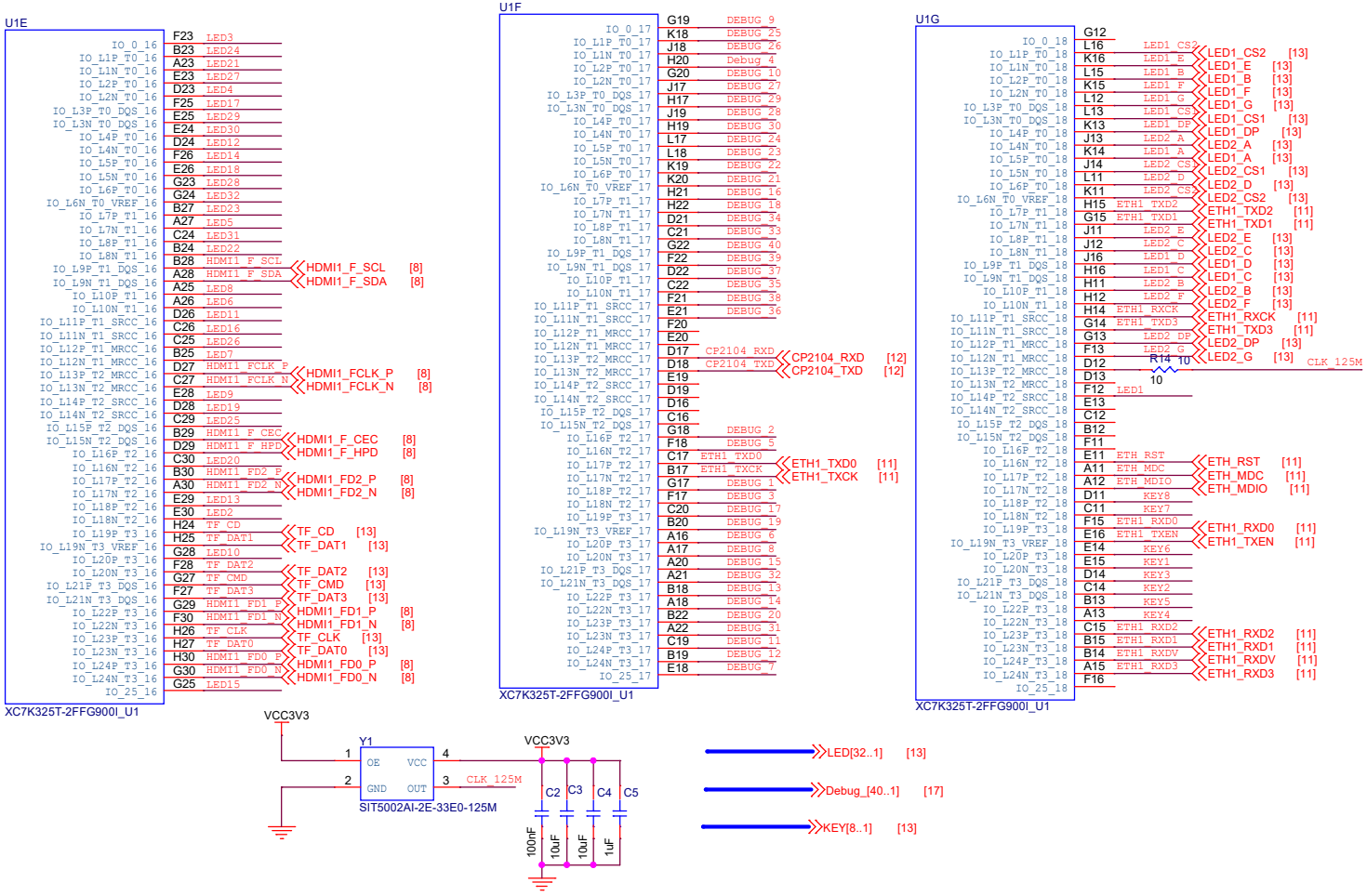
U1E
XC7K325T-2FFG900I_U1
F23 LED3
B23 LED24
A23 LED21
E23 LED27
D23 LED4
F25 LED17
E25 LED29
E24 LED30
D24 LED12
F26 LED14
E26 LED18
G23 LED28
G24 LED32
B27 LED23
A27 LED5
C24 LED31
B24 LED22
B28 HDMI1_F_SCL
A28 HDMI1_F_SDA
A25 LED8
A26 LED6
D26 LED11
C26 LED16
C25 LED26
B25 LED7
D27 HDMI1_FCLK_P
C27 HDMI1_FCLK_N
E28 LED9
D28 LED19
C29 LED25
B29 HDMI1_F_CEC
D29 HDMI1_F_HPD
C30 LED20
B30 HDMI1_FD2_P
A30 HDMI1_FD2_N
E29 LED13
E30 LED2
H24 TF_CD
H25 TF_DAT1
G28 LED10
F28 TF_DAT2
G27 TF_CMD
F27 TF_DAT3
G29 HDMI1_FD1_P
F30 HDMI1_FD1_N
H26 TF_CLK
H27 TF_DAT0
H30 HDMI1_FD0_P
G30 HDMI1_FD0_N
G25 LED15
HDMI1_F_SCL [8]
HDMI1_F_SDA [8]
HDMI1_FCLK_P [8]
HDMI1_FCLK_N [8]
HDMI1_F_CEC [8]
HDMI1_F_HPD [8]
HDMI1_FD2_P [8]
HDMI1_FD2_N [8]
TF_CD [13]
TF_DAT1 [13]
TF_DAT2 [13]
TF_CMD [13]
TF_DAT3 [13]
HDMI1_FD1_P [8]
HDMI1_FD1_N [8]
TF_CLK [13]
TF_DAT0 [13]
HDMI1_FD0_P [8]
HDMI1_FD0_N [8]
U1F
XC7K325T-2FFG900I_U1
G19 DEBUG_9
K18 DEBUG_25
J18 DEBUG_26
H20 Debug_4
G20 DEBUG_10
J17 DEBUG_27
H17 DEBUG_29
J19 DEBUG_28
H19 DEBUG_30
L17 DEBUG_24
L18 DEBUG_23
K19 DEBUG_22
K20 DEBUG_21
H21 DEBUG_16
H22 DEBUG_18
D21 DEBUG_34
C21 DEBUG_33
G22 DEBUG_40
F22 DEBUG_39
D22 DEBUG_37
C22 DEBUG_35
F21 DEBUG_38
E21 DEBUG_36
F20
E20
D17 CP2104_RXD
D18 CP2104_TXD
E19
D19
D16
C16
G18 DEBUG_2
F18 DEBUG_5
C17 ETH1_TXD0
B17 ETH1_TXCK
G17 DEBUG_1
F17 DEBUG_3
C20 DEBUG_17
B20 DEBUG_19
A16 DEBUG_6
A17 DEBUG_8
A20 DEBUG_15
A21 DEBUG_32
B18 DEBUG_13
A18 DEBUG_14
B22 DEBUG_20
A22 DEBUG_31
C19 DEBUG_11
B19 DEBUG_12
E18 DEBUG_7
CP2104_RXD [12]
CP2104_TXD [12]
ETH1_TXD0 [11]
ETH1_TXCK [11]
U1G
XC7K325T-2FFG900I_U1
G12
L16 LED1_CS2
K16 LED1_E
L15 LED1_B
K15 LED1_F
L12 LED1_G
L13 LED1_CS1
K13 LED1_DP
J13 LED2_A
K14 LED1_A
J14 LED2_CS1
L11 LED2_D
K11 LED2_CS2
H15 ETH1_TXD2
G15 ETH1_TXD1
J11 LED2_E
J12 LED2_C
J16 LED1_D
H16 LED1_C
H11 LED2_B
H12 LED2_F
H14 ETH1_RXCK
G14 ETH1_TXD3
G13 LED2_DP
F13 LED2_G
D12
D13
F12 LED1
E13
C12
B12
F11
E11 ETH_RST
A11 ETH_MDC
A12 ETH_MDIO
D11 KEY8
C11 KEY7
F15 ETH1_RXD0
E16 ETH1_TXEN
E14 KEY6
E15 KEY1
D14 KEY3
C14 KEY2
B13 KEY5
A13 KEY4
C15 ETH1_RXD2
B15 ETH1_RXD1
B14 ETH1_RXDV
A15 ETH1_RXD3
F16
LED1_CS2 [13]
LED1_E [13]
LED1_B [13]
LED1_F [13]
LED1_G [13]
LED1_CS1 [13]
LED1_DP [13]
LED2_A [13]
LED1_A [13]
LED2_CS1 [13]
LED2_D [13]
LED2_CS2 [13]
ETH1_TXD2 [11]
ETH1_TXD1 [11]
LED2_E [13]
LED2_C [13]
LED1_D [13]
LED1_C [13]
LED2_B [13]
LED2_F [13]
ETH1_RXCK [11]
ETH1_TXD3 [11]
LED2_DP [13]
LED2_G [13]
R14 10
10
CLK_125M
ETH_RST [11]
ETH_MDC [11]
ETH_MDIO [11]
ETH1_RXD0 [11]
ETH1_TXEN [11]
ETH1_RXD2 [11]
ETH1_RXD1 [11]
ETH1_RXDV [11]
ETH1_RXD3 [11]
VCC3V3
Y1
OE
VCC
GND
OUT
SIT5002AI-2E-33E0-125M
CLK_125M
C2
C3
C4
C5
100nF
10uF
10uF
1uF
LED[32..1] [13]
Debug_[40..1] [17]
KEY[8..1] [13]

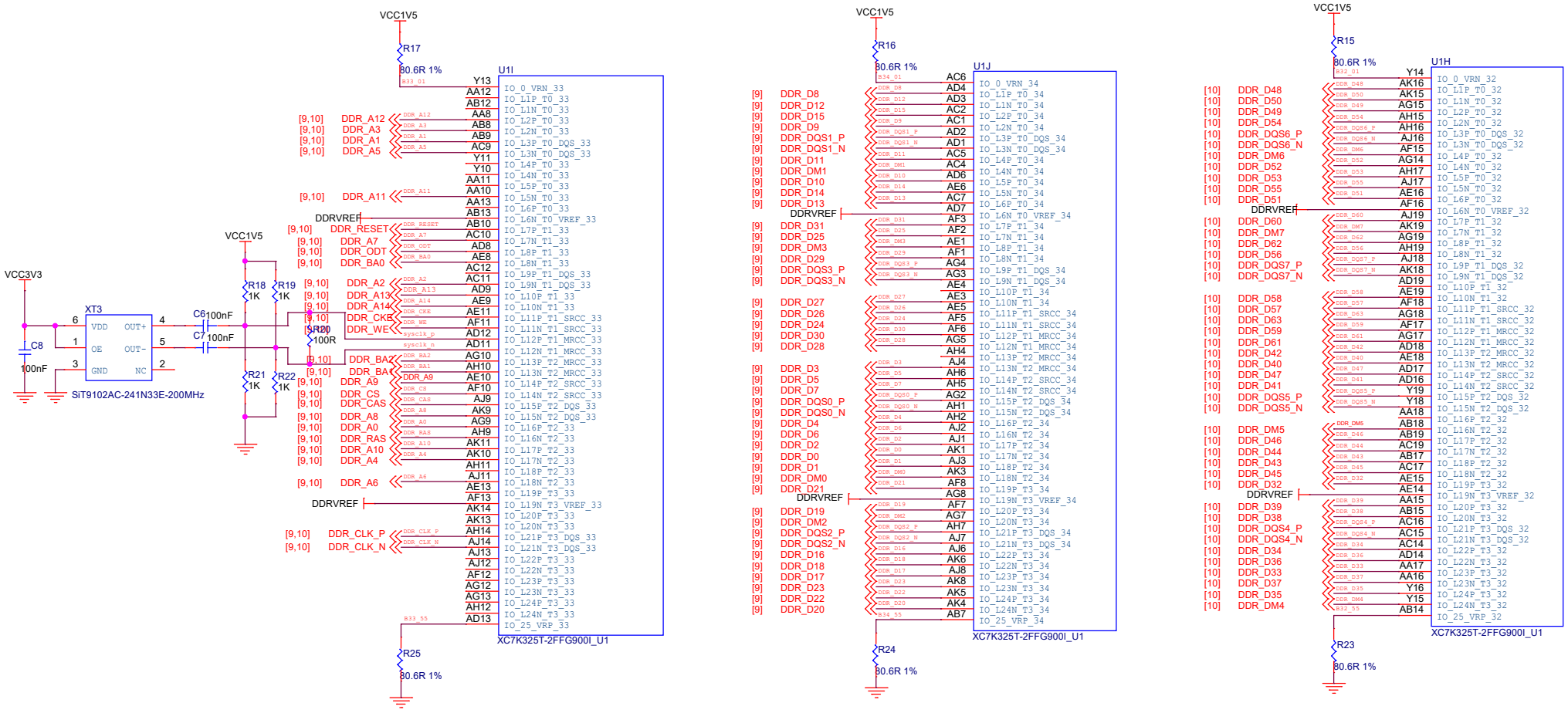
VCC1V5
R17
80.6R 1%
U1I
Y13 IO_0_VRN_33
AA12 IO_L1P_T0_33
AB12 IO_L1N_T0_33
AA8 IO_L2P_T0_33
AB8 IO_L2N_T0_33
AB9 IO_L3P_T0_DQS_33
AC9 IO_L3N_T0_DQS_33
Y11 IO_L4P_T0_33
Y10 IO_L4N_T0_33
AA11 IO_L5P_T0_33
AA10 IO_L5N_T0_33
AA13 IO_L6P_T0_33
AB13 IO_L6N_T0_VREF_33
AB10 IO_L7P_T1_33
AC10 IO_L7N_T1_33
AD8 IO_L8P_T1_33
AE8 IO_L8N_T1_33
AC12 IO_L9P_T1_DQS_33
AC11 IO_L9N_T1_DQS_33
AD9 IO_L10P_T1_33
AE9 IO_L10N_T1_33
AE11 IO_L11P_T1_SRCC_33
AF11 IO_L11N_T1_SRCC_33
AD12 IO_L12P_T1_MRCC_33
AD11 IO_L12N_T1_MRCC_33
AG10 IO_L13P_T2_MRCC_33
AH10 IO_L13N_T2_MRCC_33
AE10 IO_L14P_T2_SRCC_33
AF10 IO_L14N_T2_SRCC_33
AJ9 IO_L15P_T2_DQS_33
AK9 IO_L15N_T2_DQS_33
AG9 IO_L16P_T2_33
AH9 IO_L16N_T2_33
AK11 IO_L17P_T2_33
AK10 IO_L17N_T2_33
AH11 IO_L18P_T2_33
AJ11 IO_L18N_T2_33
AE13 IO_L19P_T3_33
AF13 IO_L19N_T3_VREF_33
AK14 IO_L20P_T3_33
AK13 IO_L20N_T3_33
AH14 IO_L21P_T3_DQS_33
AJ14 IO_L21N_T3_DQS_33
AJ13 IO_L22P_T3_33
AJ12 IO_L22N_T3_33
AF12 IO_L23P_T3_33
AG12 IO_L23N_T3_33
AG13 IO_L24P_T3_33
AH12 IO_L24N_T3_33
AD13 IO_25_VRP_33
XC7K325T-2FFG900I_U1
[9,10] DDR_A12
[9,10] DDR_A3
[9,10] DDR_A1
[9,10] DDR_A5
[9,10] DDR_A11
DDRVREF
[9,10] DDR_RESET
[9,10] DDR_A7
[9,10] DDR_ODT
[9,10] DDR_BA0
[9,10] DDR_A2
[9,10] DDR_A13
[9,10] DDR_A14
[9,10] DDR_CKE
[9,10] DDR_WE
[9,10] DDR_BA2
[9,10] DDR_BA1
[9,10] DDR_A9
[9,10] DDR_CS
[9,10] DDR_CAS
[9,10] DDR_A8
[9,10] DDR_A0
[9,10] DDR_RAS
[9,10] DDR_A10
[9,10] DDR_A4
[9,10] DDR_A6
DDRVREF
[9,10] DDR_CLK_P
[9,10] DDR_CLK_N
R25
80.6R 1%
VCC3V3
C8
100nF
XT3
VDD OUT+
OE OUT-
GND NC
SiT9102AC-241N33E-200MHz
C6 100nF
C7 100nF
R18 1K
R19 1K
R21 1K
R22 1K
R20 100R
VCC1V5
R16
80.6R 1%
U1J
AC6 IO_0_VRN_34
AD4 IO_L1P_T0_34
AD3 IO_L1N_T0_34
AC2 IO_L2P_T0_34
AC1 IO_L2N_T0_34
AD2 IO_L3P_T0_DQS_34
AD1 IO_L3N_T0_DQS_34
AC5 IO_L4P_T0_34
AC4 IO_L4N_T0_34
AD6 IO_L5P_T0_34
AE6 IO_L5N_T0_34
AC7 IO_L6P_T0_34
AD7 IO_L6N_T0_VREF_34
AF3 IO_L7P_T1_34
AF2 IO_L7N_T1_34
AE1 IO_L8P_T1_34
AF1 IO_L8N_T1_34
AG4 IO_L9P_T1_DQS_34
AG3 IO_L9N_T1_DQS_34
AE4 IO_L10P_T1_34
AE3 IO_L10N_T1_34
AE5 IO_L11P_T1_SRCC_34
AF5 IO_L11N_T1_SRCC_34
AF6 IO_L12P_T1_MRCC_34
AG5 IO_L12N_T1_MRCC_34
AH4 IO_L13P_T2_MRCC_34
AJ4 IO_L13N_T2_MRCC_34
AH6 IO_L14P_T2_SRCC_34
AH5 IO_L14N_T2_SRCC_34
AG2 IO_L15P_T2_DQS_34
AH1 IO_L15N_T2_DQS_34
AH2 IO_L16P_T2_34
AJ2 IO_L16N_T2_34
AJ1 IO_L17P_T2_34
AK1 IO_L17N_T2_34
AJ3 IO_L18P_T2_34
AK3 IO_L18N_T2_34
AF8 IO_L19P_T3_34
AG8 IO_L19N_T3_VREF_34
AF7 IO_L20P_T3_34
AG7 IO_L20N_T3_34
AH7 IO_L21P_T3_DQS_34
AJ7 IO_L21N_T3_DQS_34
AJ6 IO_L22P_T3_34
AK6 IO_L22N_T3_34
AJ8 IO_L23P_T3_34
AK8 IO_L23N_T3_34
AK5 IO_L24P_T3_34
AK4 IO_L24N_T3_34
AB7 IO_25_VRP_34
XC7K325T-2FFG900I_U1
[9] DDR_D8
[9] DDR_D12
[9] DDR_D15
[9] DDR_D9
[9] DDR_DQS1_P
[9] DDR_DQS1_N
[9] DDR_D11
[9] DDR_DM1
[9] DDR_D10
[9] DDR_D14
[9] DDR_D13
DDRVREF
[9] DDR_D31
[9] DDR_D25
[9] DDR_DM3
[9] DDR_D29
[9] DDR_DQS3_P
[9] DDR_DQS3_N
[9] DDR_D27
[9] DDR_D26
[9] DDR_D24
[9] DDR_D30
[9] DDR_D28
[9] DDR_D3
[9] DDR_D5
[9] DDR_D7
[9] DDR_DQS0_P
[9] DDR_DQS0_N
[9] DDR_D4
[9] DDR_D6
[9] DDR_D2
[9] DDR_D0
[9] DDR_D1
[9] DDR_DM0
[9] DDR_D21
DDRVREF
[9] DDR_D19
[9] DDR_DM2
[9] DDR_DQS2_P
[9] DDR_DQS2_N
[9] DDR_D16
[9] DDR_D18
[9] DDR_D17
[9] DDR_D23
[9] DDR_D22
[9] DDR_D20
R24
80.6R 1%
VCC1V5
R15
80.6R 1%
U1H
Y14 IO_0_VRN_32
AK16 IO_L1P_T0_32
AK15 IO_L1N_T0_32
AG15 IO_L2P_T0_32
AH15 IO_L2N_T0_32
AH16 IO_L3P_T0_DQS_32
AJ16 IO_L3N_T0_DQS_32
AF15 IO_L4P_T0_32
AG14 IO_L4N_T0_32
AH17 IO_L5P_T0_32
AJ17 IO_L5N_T0_32
AE16 IO_L6P_T0_32
AF16 IO_L6N_T0_VREF_32
AJ19 IO_L7P_T1_32
AK19 IO_L7N_T1_32
AG19 IO_L8P_T1_32
AH19 IO_L8N_T1_32
AJ18 IO_L9P_T1_DQS_32
AK18 IO_L9N_T1_DQS_32
AD19 IO_L10P_T1_32
AE19 IO_L10N_T1_32
AF18 IO_L11P_T1_SRCC_32
AG18 IO_L11N_T1_SRCC_32
AF17 IO_L12P_T1_MRCC_32
AG17 IO_L12N_T1_MRCC_32
AD18 IO_L13P_T2_MRCC_32
AE18 IO_L13N_T2_MRCC_32
AD17 IO_L14P_T2_SRCC_32
AD16 IO_L14N_T2_SRCC_32
Y19 IO_L15P_T2_DQS_32
Y18 IO_L15N_T2_DQS_32
AA18 IO_L16P_T2_32
AB18 IO_L16N_T2_32
AB19 IO_L17P_T2_32
AC19 IO_L17N_T2_32
AB17 IO_L18P_T2_32
AC17 IO_L18N_T2_32
AE15 IO_L19P_T3_32
AE14 IO_L19N_T3_VREF_32
AA15 IO_L20P_T3_32
AB15 IO_L20N_T3_32
AC16 IO_L21P_T3_DQS_32
AC15 IO_L21N_T3_DQS_32
AC14 IO_L22P_T3_32
AD14 IO_L22N_T3_32
AA17 IO_L23P_T3_32
AA16 IO_L23N_T3_32
Y16 IO_L24P_T3_32
Y15 IO_L24N_T3_32
AB14 IO_25_VRP_32
XC7K325T-2FFG900I_U1
[10] DDR_D48
[10] DDR_D50
[10] DDR_D49
[10] DDR_D54
[10] DDR_DQS6_P
[10] DDR_DQS6_N
[10] DDR_DM6
[10] DDR_D52
[10] DDR_D53
[10] DDR_D55
[10] DDR_D51
DDRVREF
[10] DDR_D60
[10] DDR_DM7
[10] DDR_D62
[10] DDR_D56
[10] DDR_DQS7_P
[10] DDR_DQS7_N
[10] DDR_D58
[10] DDR_D57
[10] DDR_D63
[10] DDR_D59
[10] DDR_D61
[10] DDR_D42
[10] DDR_D40
[10] DDR_D47
[10] DDR_D41
[10] DDR_DQS5_P
[10] DDR_DQS5_N
[10] DDR_DM5
[10] DDR_D46
[10] DDR_D44
[10] DDR_D43
[10] DDR_D45
[10] DDR_D32
DDRVREF
[10] DDR_D39
[10] DDR_D38
[10] DDR_DQS4_P
[10] DDR_DQS4_N
[10] DDR_D34
[10] DDR_D36
[10] DDR_D33
[10] DDR_D37
[10] DDR_D35
[10] DDR_DM4
R23
80.6R 1%

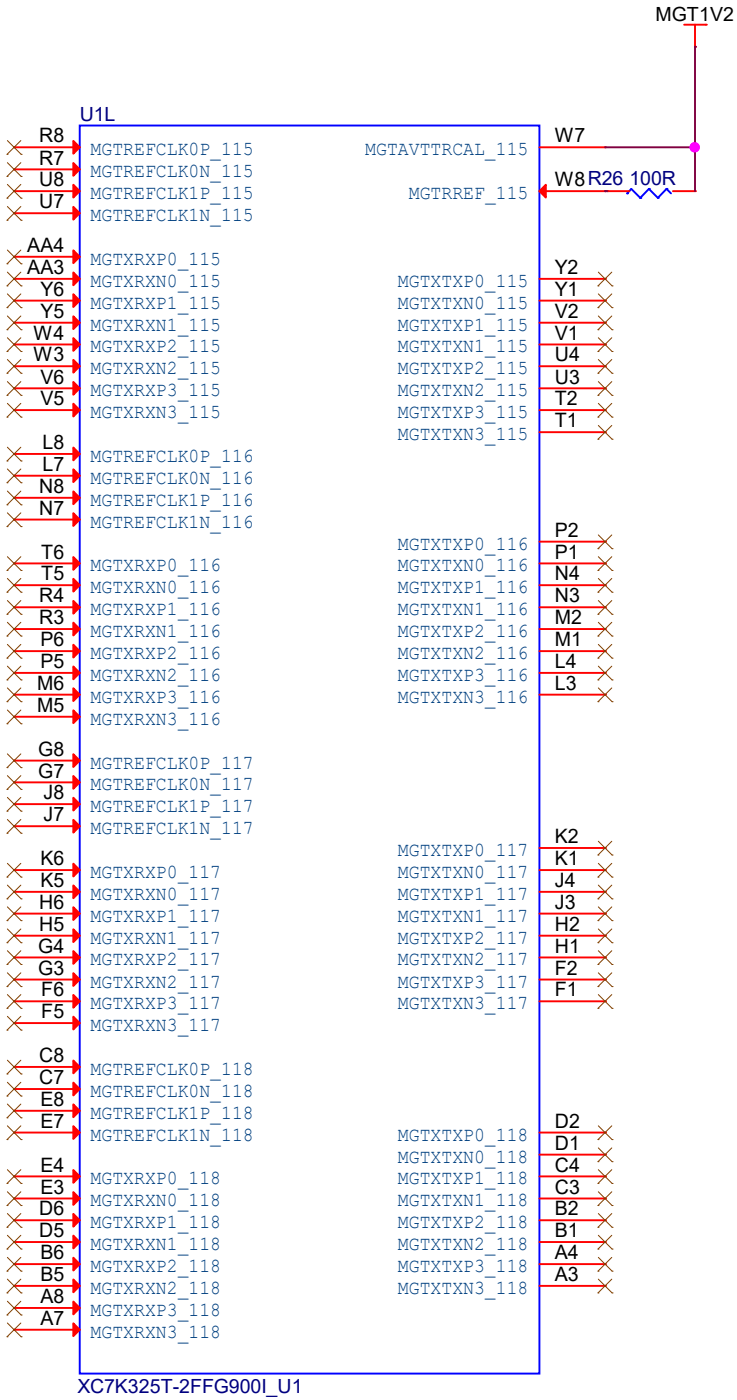
MGT1V2
U1L
R8 MGTREFCLK0P_115
R7 MGTREFCLK0N_115
U8 MGTREFCLK1P_115
U7 MGTREFCLK1N_115
MGTAVTTRCAL_115 W7
MGTRREF_115 W8
R26 100R
AA4 MGTXRXP0_115
AA3 MGTXRXN0_115
Y6 MGTXRXP1_115
Y5 MGTXRXN1_115
W4 MGTXRXP2_115
W3 MGTXRXN2_115
V6 MGTXRXP3_115
V5 MGTXRXN3_115
MGTXTXP0_115 Y2
MGTXTXN0_115 Y1
MGTXTXP1_115 V2
MGTXTXN1_115 V1
MGTXTXP2_115 U4
MGTXTXN2_115 U3
MGTXTXP3_115 T2
MGTXTXN3_115 T1
L8 MGTREFCLK0P_116
L7 MGTREFCLK0N_116
N8 MGTREFCLK1P_116
N7 MGTREFCLK1N_116
T6 MGTXRXP0_116
T5 MGTXRXN0_116
R4 MGTXRXP1_116
R3 MGTXRXN1_116
P6 MGTXRXP2_116
P5 MGTXRXN2_116
M6 MGTXRXP3_116
M5 MGTXRXN3_116
MGTXTXP0_116 P2
MGTXTXN0_116 P1
MGTXTXP1_116 N4
MGTXTXN1_116 N3
MGTXTXP2_116 M2
MGTXTXN2_116 M1
MGTXTXP3_116 L4
MGTXTXN3_116 L3
G8 MGTREFCLK0P_117
G7 MGTREFCLK0N_117
J8 MGTREFCLK1P_117
J7 MGTREFCLK1N_117
K6 MGTXRXP0_117
K5 MGTXRXN0_117
H6 MGTXRXP1_117
H5 MGTXRXN1_117
G4 MGTXRXP2_117
G3 MGTXRXN2_117
F6 MGTXRXP3_117
F5 MGTXRXN3_117
MGTXTXP0_117 K2
MGTXTXN0_117 K1
MGTXTXP1_117 J4
MGTXTXN1_117 J3
MGTXTXP2_117 H2
MGTXTXN2_117 H1
MGTXTXP3_117 F2
MGTXTXN3_117 F1
C8 MGTREFCLK0P_118
C7 MGTREFCLK0N_118
E8 MGTREFCLK1P_118
E7 MGTREFCLK1N_118
E4 MGTXRXP0_118
E3 MGTXRXN0_118
D6 MGTXRXP1_118
D5 MGTXRXN1_118
B6 MGTXRXP2_118
B5 MGTXRXN2_118
A8 MGTXRXP3_118
A7 MGTXRXN3_118
MGTXTXP0_118 D2
MGTXTXN0_118 D1
MGTXTXP1_118 C4
MGTXTXN1_118 C3
MGTXTXP2_118 B2
MGTXTXN2_118 B1
MGTXTXP3_118 A4
MGTXTXN3_118 A3
XC7K325T-2FFG900I_U1

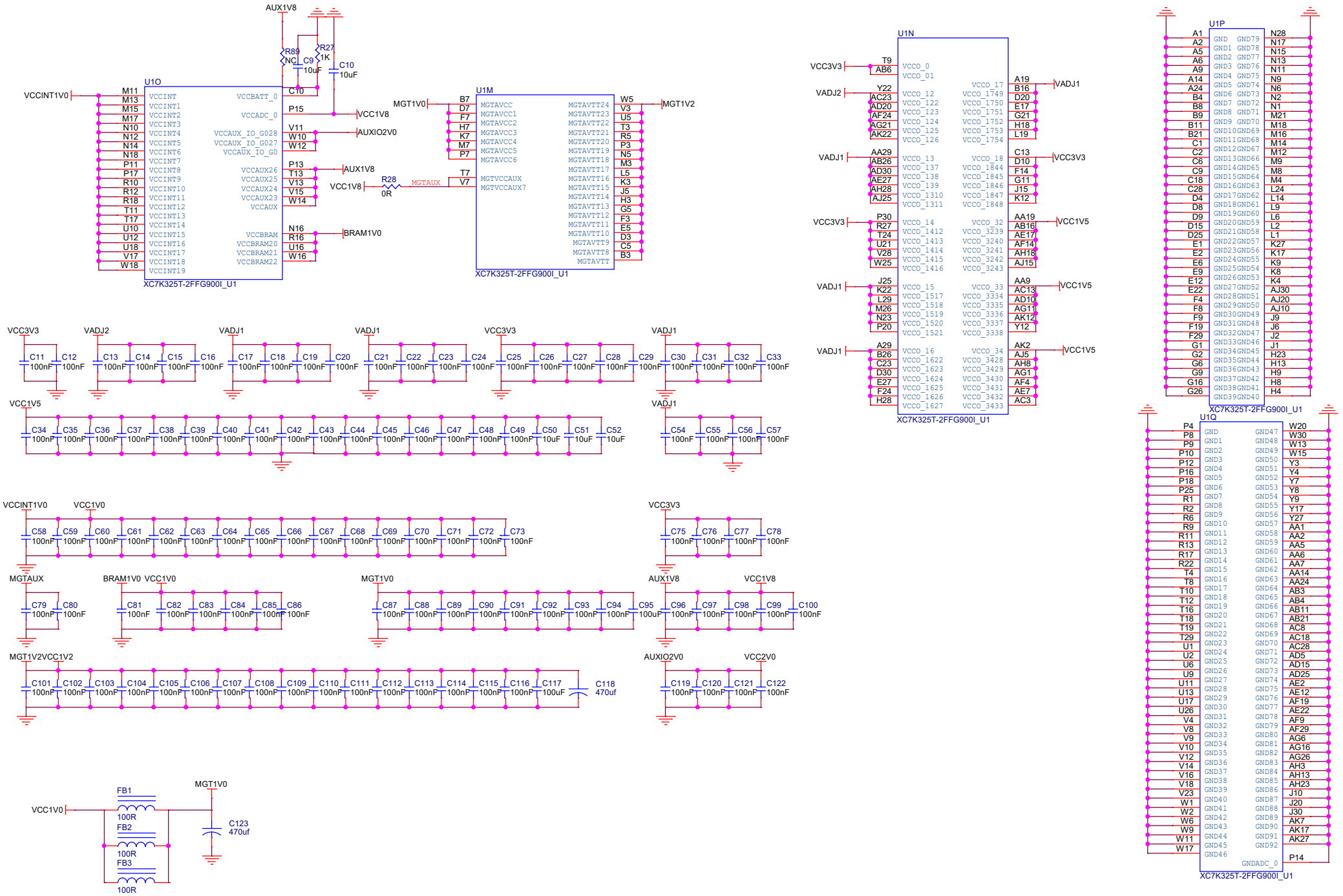
U1O
XC7K325T-2FFG900I_U1
U1M
XC7K325T-2FFG900I_U1
U1N
XC7K325T-2FFG900I_U1
U1P
XC7K325T-2FFG900I_U1
U1Q
XC7K325T-2FFG900I_U1
AUX1V8
R89
NC
C9
10uF
R27
1K
C10
10uF
VCCINT1V0
VCC1V8
AUXIO2V0
AUX1V8
BRAM1V0
MGT1V0
MGT1V2
R28
0R
MGTAUX
VCC3V3
VADJ2
VADJ1
VCC1V5
VCC1V0
MGT1V2VCC1V2
AUXIO2V0
VCC2V0
C118
470uf
FB1
FB2
FB3
100R
C123
470uf

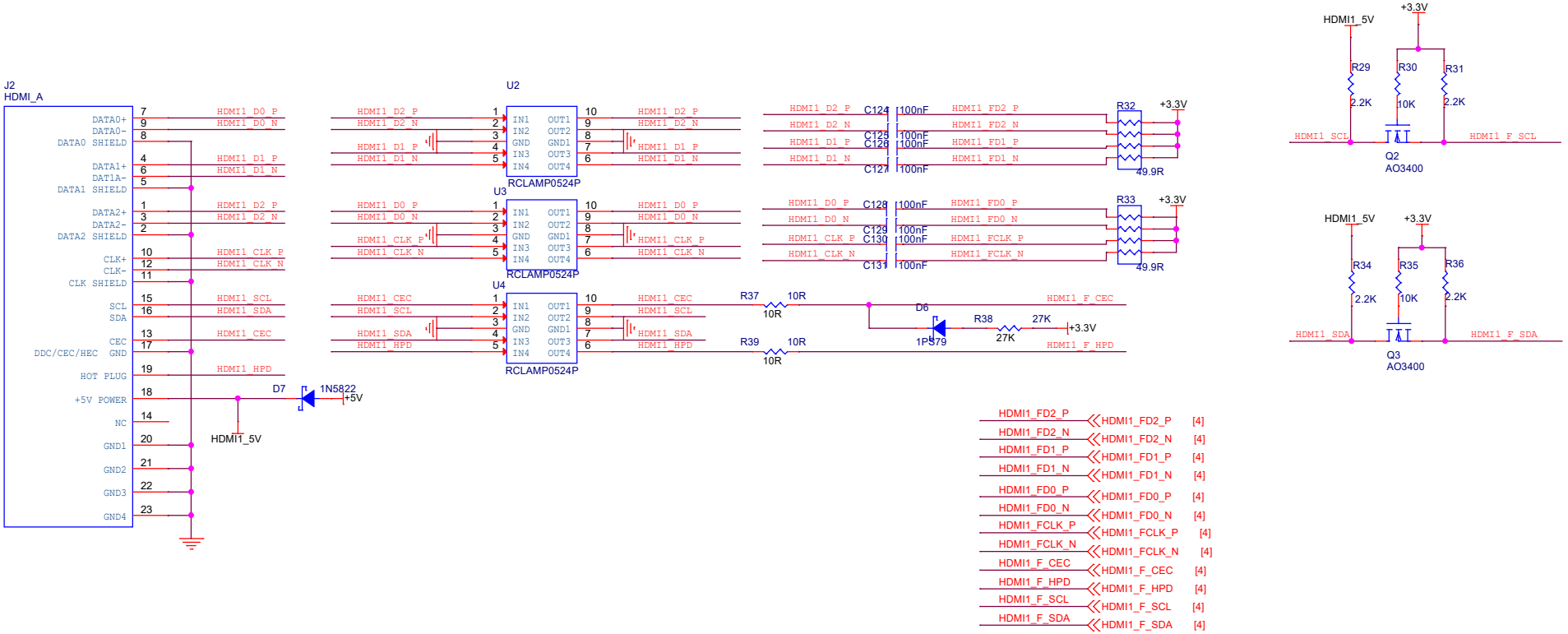
J2
HDMI_A
DATA0+
DATA0-
DATA0 SHIELD
DATA1+
DATA1-
DATA1 SHIELD
DATA2+
DATA2-
DATA2 SHIELD
CLK+
CLK-
CLK SHIELD
SCL
SDA
CEC
DDC/CEC/HEC GND
HOT PLUG
+5V POWER
NC
GND1
GND2
GND3
GND4
HDMI1_D0_P
HDMI1_D0_N
HDMI1_D1_P
HDMI1_D1_N
HDMI1_D2_P
HDMI1_D2_N
HDMI1_CLK_P
HDMI1_CLK_N
HDMI1_SCL
HDMI1_SDA
HDMI1_CEC
HDMI1_HPD
D7
1N5822
+5V
HDMI1_5V
U2
U3
U4
RCLAMP0524P
IN1
IN2
GND
IN3
IN4
OUT1
OUT2
GND1
OUT3
OUT4
HDMI1_FD2_P
HDMI1_FD2_N
HDMI1_FD1_P
HDMI1_FD1_N
HDMI1_FD0_P
HDMI1_FD0_N
HDMI1_FCLK_P
HDMI1_FCLK_N
C124
C125
C126
C127
C128
C129
C130
C131
100nF
R32
R33
49.9R
+3.3V
HDMI1_F_CEC
HDMI1_F_HPD
R37
R39
10R
D6
1PS79
R38
27K
HDMI1_5V
+3.3V
R29
R30
R31
2.2K
10K
HDMI1_SCL
HDMI1_F_SCL
Q2
AO3400
R34
R35
R36
HDMI1_SDA
HDMI1_F_SDA
Q3
AO3400
HDMI1_FD2_P [4]
HDMI1_FD2_N [4]
HDMI1_FD1_P [4]
HDMI1_FD1_N [4]
HDMI1_FD0_P [4]
HDMI1_FD0_N [4]
HDMI1_FCLK_P [4]
HDMI1_FCLK_N [4]
HDMI1_F_CEC [4]
HDMI1_F_HPD [4]
HDMI1_F_SCL [4]
HDMI1_F_SDA [4]

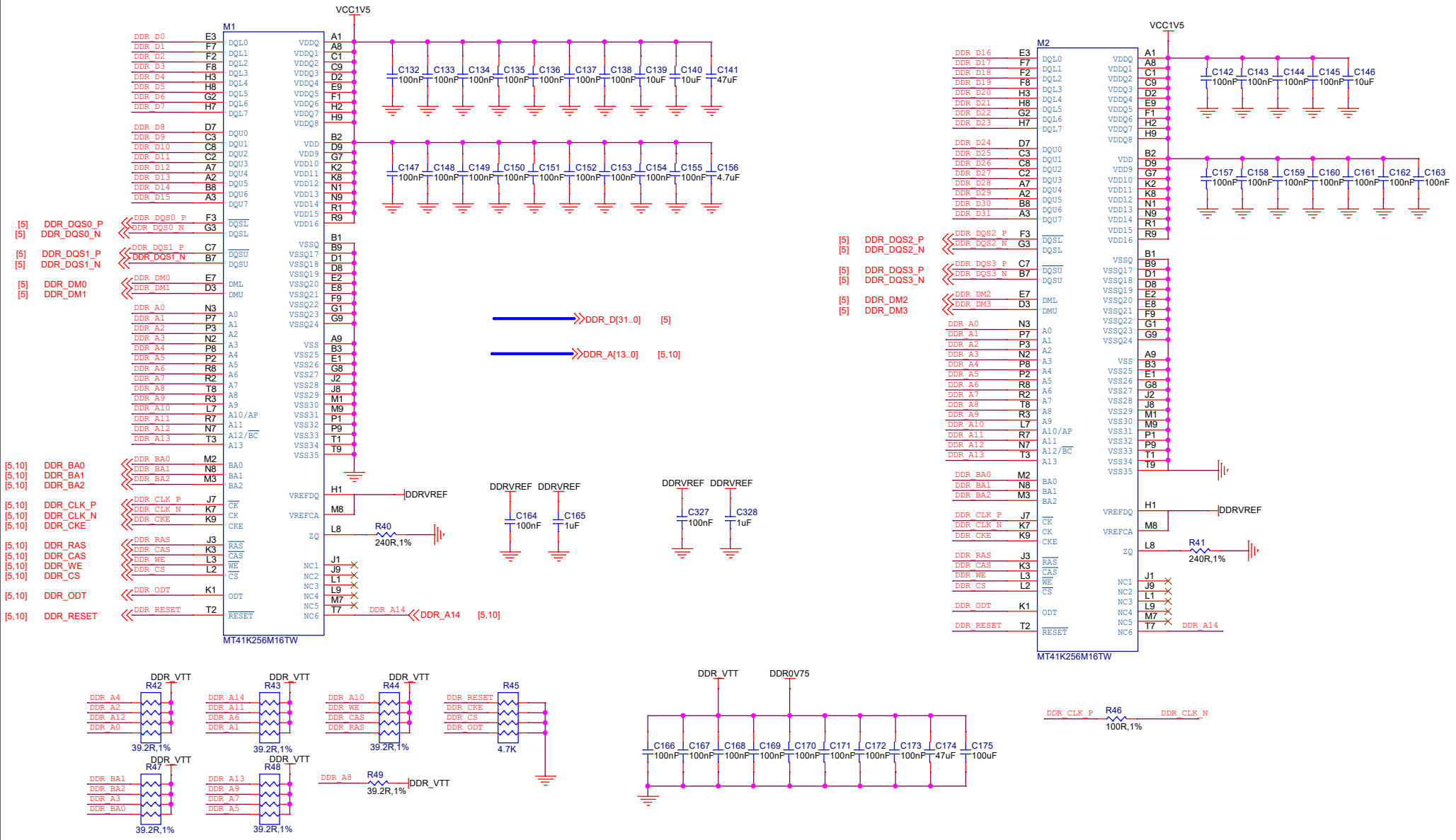
VCC1V5
M1
MT41K256M16TW
M2
MT41K256M16TW
DDR_D[31..0] [5]
DDR_A[13..0] [5,10]
DDRVREF
DDR_VTT
DDR0V75
R40 240R,1%
R41 240R,1%
R46 100R,1%
R42 39.2R,1%
R43 39.2R,1%
R44 39.2R,1%
R45 4.7K
R47 39.2R,1%
R48 39.2R,1%
R49 39.2R,1%
DDR_CLK_P
DDR_CLK_N
DDR_A14

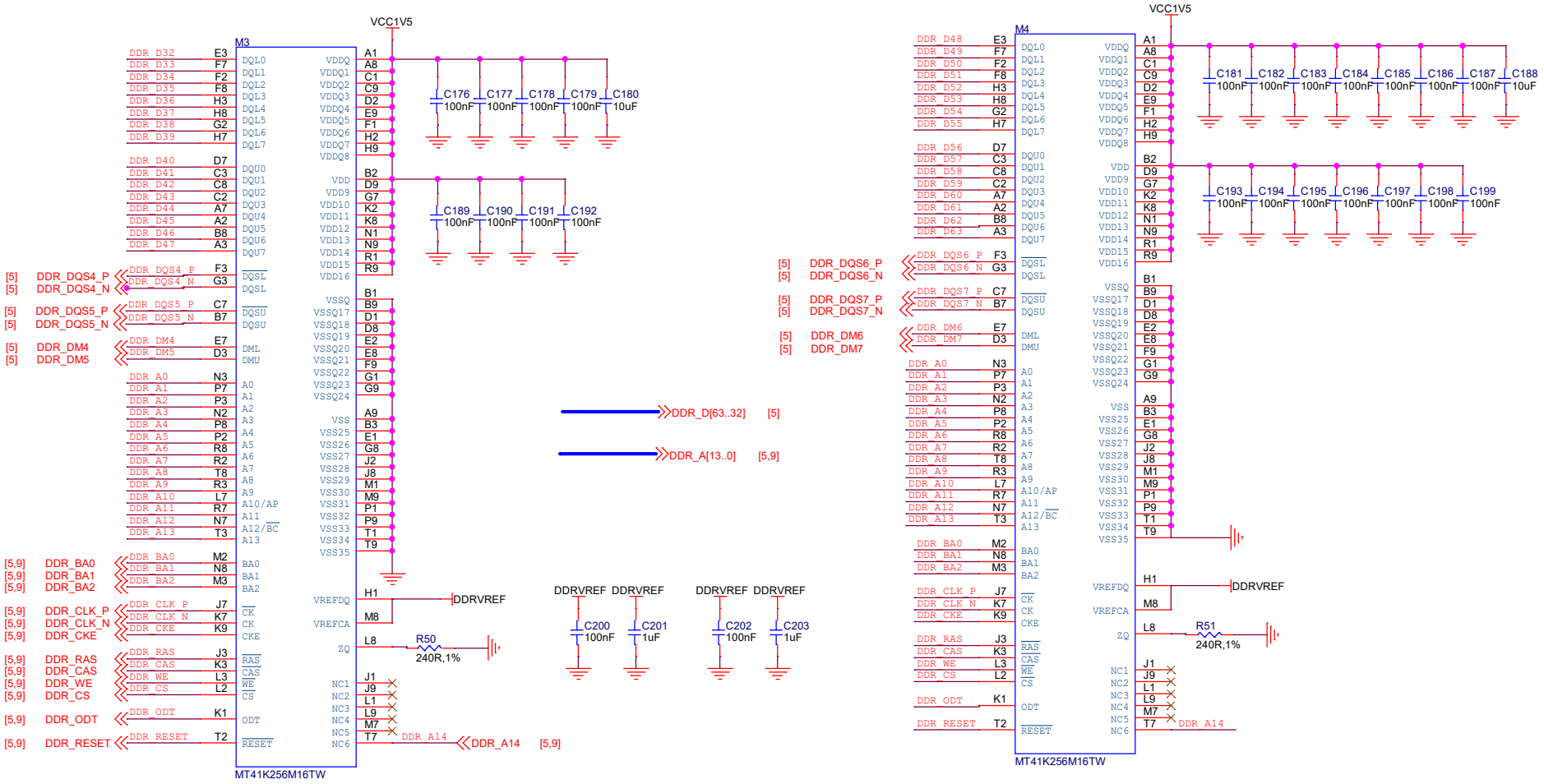
VCC1V5
M3
MT41K256M16TW
M4
MT41K256M16TW
DDR_D[63..32] [5]
DDR_A[13..0] [5,9]
DDRVREF
DDR_A14 [5,9]
R50 240R,1%
R51 240R,1%
C176 C177 C178 C179 C180 100nF 100nF 100nF 100nF 10uF
C189 C190 C191 C192 100nF 100nF 100nF 100nF
C181 C182 C183 C184 C185 C186 C187 C188 100nF 100nF 100nF 100nF 100nF 100nF 100nF 10uF
C193 C194 C195 C196 C197 C198 C199 100nF 100nF 100nF 100nF 100nF 100nF 100nF
C200 100nF
C201 1uF
C202 100nF
C203 1uF
[5] DDR_DQS4_P
[5] DDR_DQS4_N
[5] DDR_DQS5_P
[5] DDR_DQS5_N
[5] DDR_DM4
[5] DDR_DM5
[5,9] DDR_BA0
[5,9] DDR_BA1
[5,9] DDR_BA2
[5,9] DDR_CLK_P
[5,9] DDR_CLK_N
[5,9] DDR_CKE
[5,9] DDR_RAS
[5,9] DDR_CAS
[5,9] DDR_WE
[5,9] DDR_CS
[5,9] DDR_ODT
[5,9] DDR_RESET
[5] DDR_DQS6_P
[5] DDR_DQS6_N
[5] DDR_DQS7_P
[5] DDR_DQS7_N
[5] DDR_DM6
[5] DDR_DM7

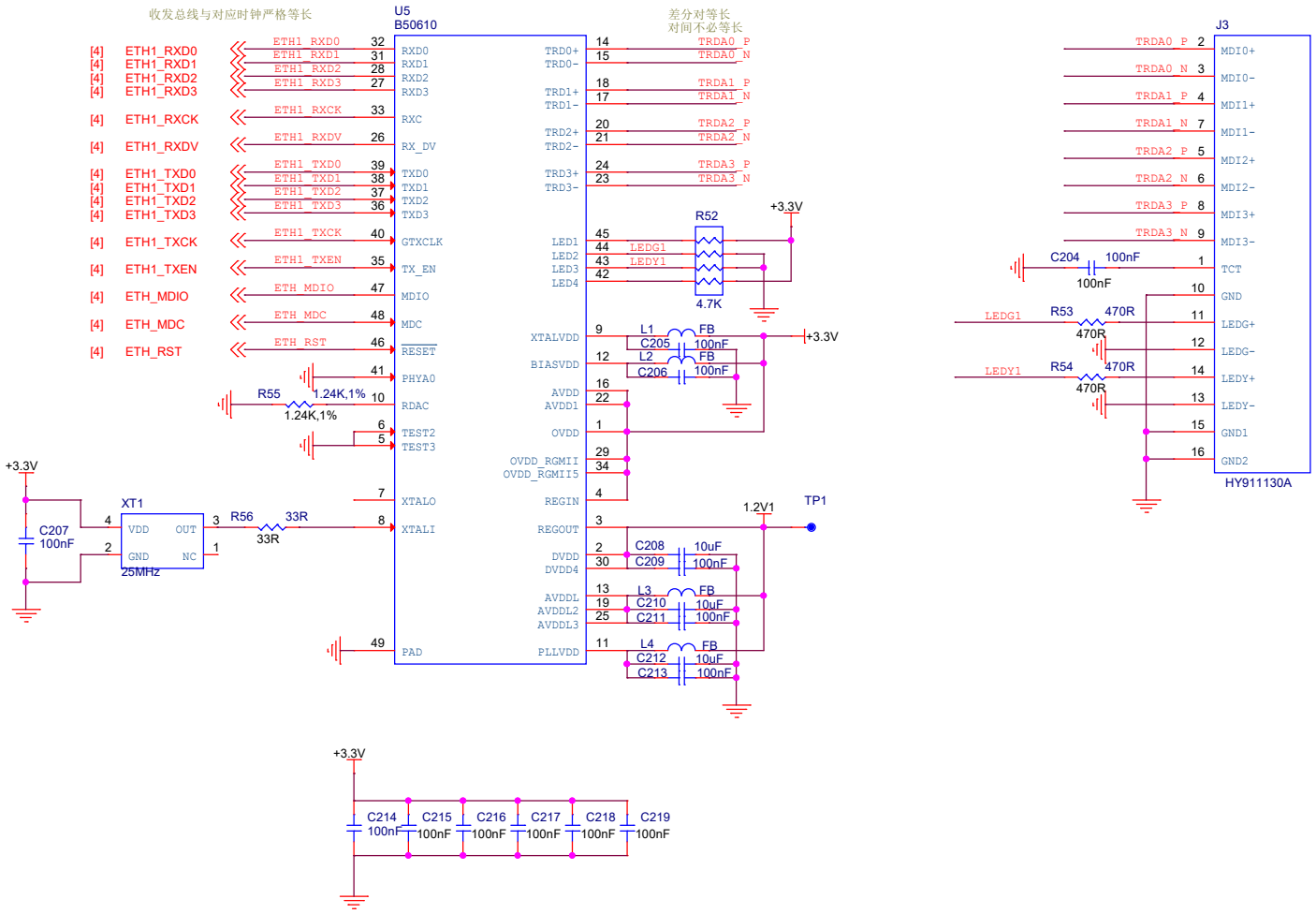
收发总线与对应时钟严格等长
U5
B50610
差分对等长
对间不必等长
[4] ETH1_RXD0
[4] ETH1_RXD1
[4] ETH1_RXD2
[4] ETH1_RXD3
[4] ETH1_RXCK
[4] ETH1_RXDV
[4] ETH1_TXD0
[4] ETH1_TXD1
[4] ETH1_TXD2
[4] ETH1_TXD3
[4] ETH1_TXCK
[4] ETH1_TXEN
[4] ETH_MDIO
[4] ETH_MDC
[4] ETH_RST
RXD0
RXD1
RXD2
RXD3
RXC
RX_DV
TXD0
TXD1
TXD2
TXD3
GTXCLK
TX_EN
MDIO
MDC
RESET
PHYA0
RDAC
TEST2
TEST3
XTALO
XTALI
PAD
TRD0+
TRD0-
TRD1+
TRD1-
TRD2+
TRD2-
TRD3+
TRD3-
TRDA0_P
TRDA0_N
TRDA1_P
TRDA1_N
TRDA2_P
TRDA2_N
TRDA3_P
TRDA3_N
LED1
LED2
LED3
LED4
LEDG1
LEDY1
R52
4.7K
+3.3V
XTALVDD
BIASVDD
AVDD
AVDD1
OVDD
OVDD_RGMII
OVDD_RGMII5
REGIN
REGOUT
DVDD
DVDD4
AVDDL
AVDDL2
AVDDL3
PLLVDD
L1
L2
L3
L4
FB
C205
C206
C208
C209
C210
C211
C212
C213
100nF
10uF
1.2V1
TP1
R55
1.24K,1%
XT1
VDD
OUT
GND
NC
25MHz
R56
33R
C207
100nF
C214
C215
C216
C217
C218
C219
J3
MDI0+
MDI0-
MDI1+
MDI1-
MDI2+
MDI2-
MDI3+
MDI3-
TCT
GND
LEDG+
LEDG-
LEDY+
LEDY-
GND1
GND2
HY911130A
C204
R53
R54
470R

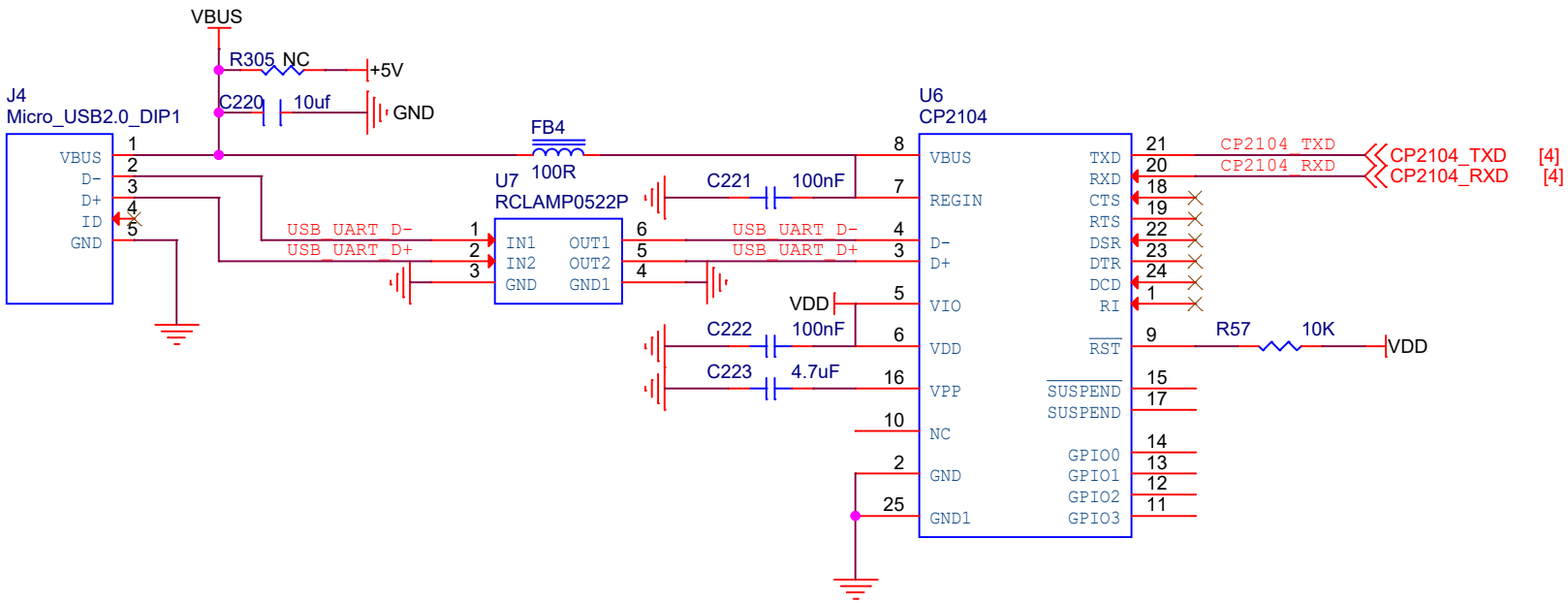
VBUS
R305 NC
+5V
J4
Micro_USB2.0_DIP1
C220
10uf
GND
FB4
100R
U7
RCLAMP0522P
U6
CP2104
VBUS
D-
D+
ID
GND
USB_UART_D-
USB_UART_D+
IN1
IN2
GND
OUT1
OUT2
GND1
C221
100nF
VDD
C222
100nF
C223
4.7uF
VBUS
REGIN
D-
D+
VIO
VDD
VPP
NC
GND
GND1
TXD
RXD
CTS
RTS
DSR
DTR
DCD
RI
RST
SUSPEND
SUSPEND
GPIO0
GPIO1
GPIO2
GPIO3
CP2104_TXD
CP2104_RXD
CP2104_TXD [4]
CP2104_RXD [4]
R57
10K
VDD

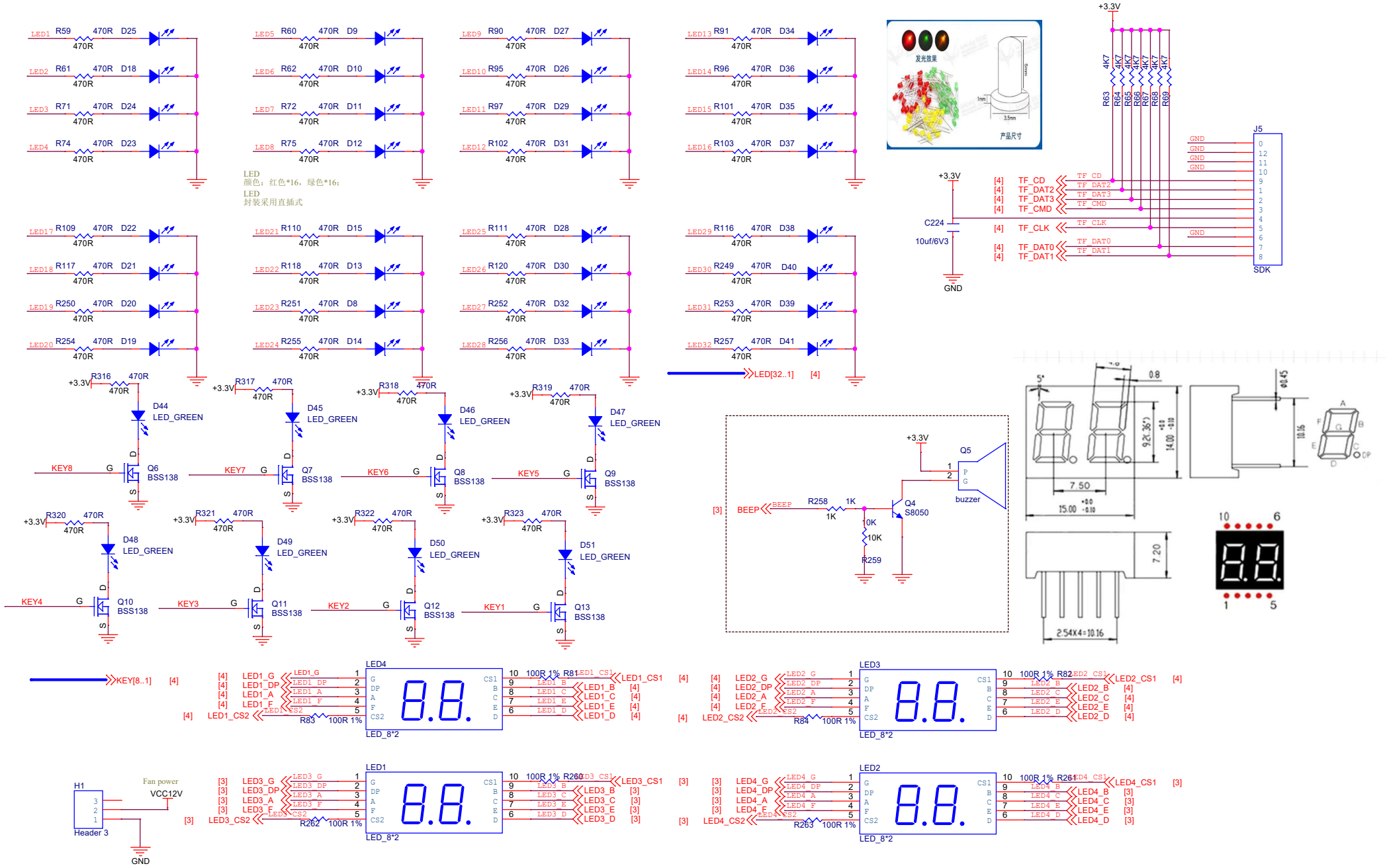
LED1 R59 470R D25
LED2 R61 470R D18
LED3 R71 470R D24
LED4 R74 470R D23
LED5 R60 470R D9
LED6 R62 470R D10
LED7 R72 470R D11
LED8 R75 470R D12
LED9 R90 470R D27
LED10 R95 470R D26
LED11 R97 470R D29
LED12 R102 470R D31
LED13 R91 470R D34
LED14 R96 470R D36
LED15 R101 470R D35
LED16 R103 470R D37
LED
颜色：红色*16，绿色*16；
LED
封装采用直插式
LED17 R109 470R D22
LED18 R117 470R D21
LED19 R250 470R D20
LED20 R254 470R D19
LED21 R110 470R D15
LED22 R118 470R D13
LED23 R251 470R D8
LED24 R255 470R D14
LED25 R111 470R D28
LED26 R120 470R D30
LED27 R252 470R D32
LED28 R256 470R D33
LED29 R116 470R D38
LED30 R249 470R D40
LED31 R253 470R D39
LED32 R257 470R D41
LED[32..1] [4]
发光效果
产品尺寸
+3.3V
4K7 R63 R64 R65 R66 R67 R68 R69
J5
SDK
TF_CD
TF_DAT2
TF_DAT3
TF_CMD
TF_CLK
TF_DAT0
TF_DAT1
GND
C224
10uf/6V3
+3.3V R316 470R D44 LED_GREEN KEY8 Q6 BSS138
+3.3V R317 470R D45 LED_GREEN KEY7 Q7 BSS138
+3.3V R318 470R D46 LED_GREEN KEY6 Q8 BSS138
+3.3V R319 470R D47 LED_GREEN KEY5 Q9 BSS138
+3.3V R320 470R D48 LED_GREEN KEY4 Q10 BSS138
+3.3V R321 470R D49 LED_GREEN KEY3 Q11 BSS138
+3.3V R322 470R D50 LED_GREEN KEY2 Q12 BSS138
+3.3V R323 470R D51 LED_GREEN KEY1 Q13 BSS138
KEY[8..1] [4]
+3.3V
Q5
buzzer
Q4 S8050
BEEP R258 1K
10K R259
LED4
LED1_G
LED1_DP
LED1_A
LED1_F
LED1_CS2
R83 100R 1%
LED1_CS1
LED1_B
LED1_C
LED1_E
LED1_D
LED_8*2
LED3
LED2_G
LED2_DP
LED2_A
LED2_F
LED2_CS2
R84 100R 1%
LED2_CS1
LED2_B
LED2_C
LED2_E
LED2_D
H1
Header 3
Fan power
VCC12V
GND
LED1
LED3_G
LED3_DP
LED3_A
LED3_F
LED3_CS2
R262 100R 1%
LED3_CS1
LED3_B
LED3_C
LED3_E
LED3_D
LED2
LED4_G
LED4_DP
LED4_A
LED4_F
LED4_CS2
R263 100R 1%
LED4_CS1
LED4_B
LED4_C
LED4_E
LED4_D
7.50
15.00
7.20
2.54X4=10.16

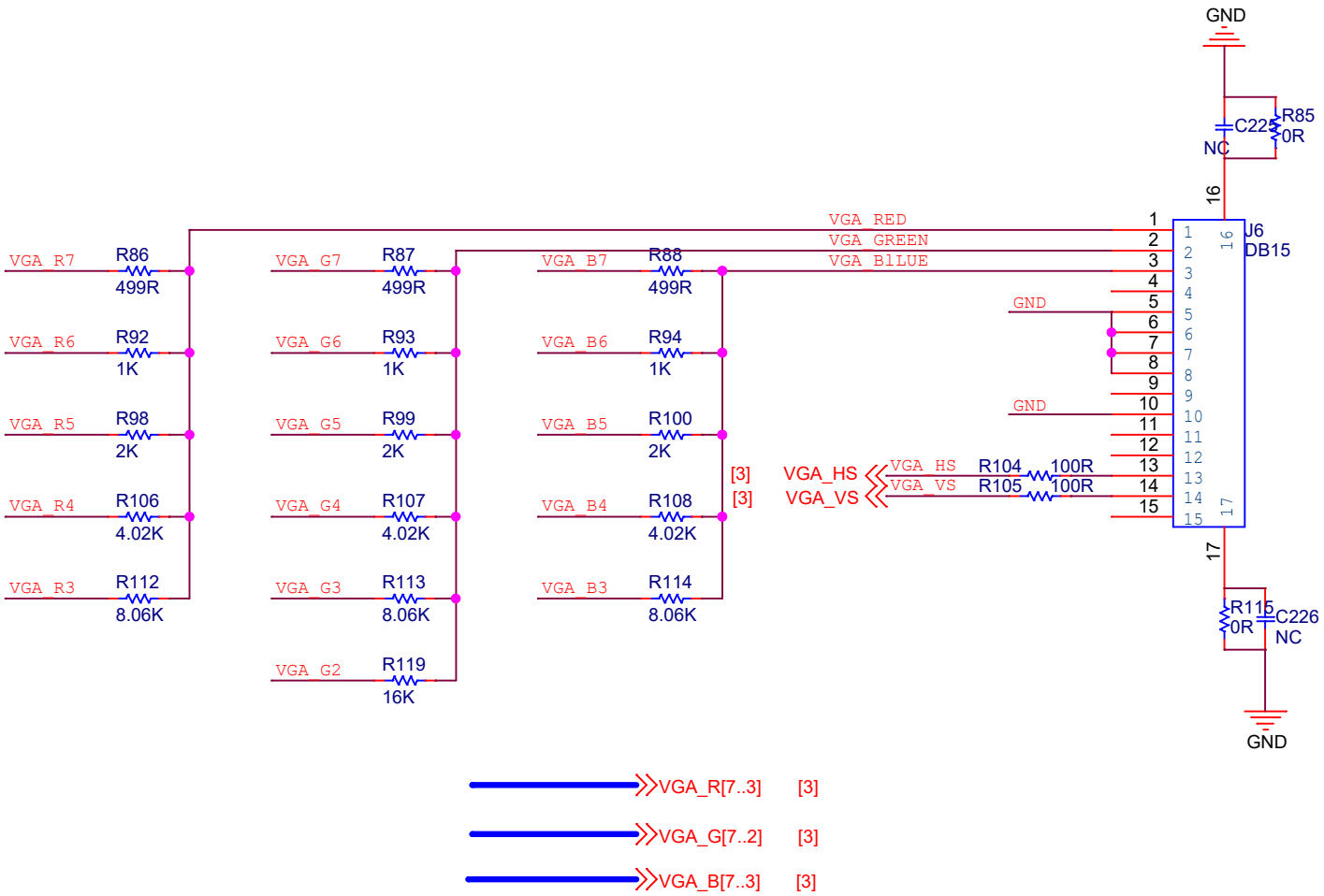
GND
C225
NC
R85
0R
16
J6
DB15
VGA_RED
VGA_GREEN
VGA_BlUE
VGA_R7
R86
499R
VGA_R6
R92
1K
VGA_R5
R98
2K
VGA_R4
R106
4.02K
VGA_R3
R112
8.06K
VGA_G7
R87
499R
VGA_G6
R93
1K
VGA_G5
R99
2K
VGA_G4
R107
4.02K
VGA_G3
R113
8.06K
VGA_G2
R119
16K
VGA_B7
R88
499R
VGA_B6
R94
1K
VGA_B5
R100
2K
VGA_B4
R108
4.02K
VGA_B3
R114
8.06K
[3]
[3]
VGA_HS
VGA_VS
VGA_HS
VGA_VS
R104
R105
100R
100R
GND
GND
17
R115
0R
C226
NC
GND
VGA_R[7..3]
[3]
VGA_G[7..2]
[3]
VGA_B[7..3]
[3]

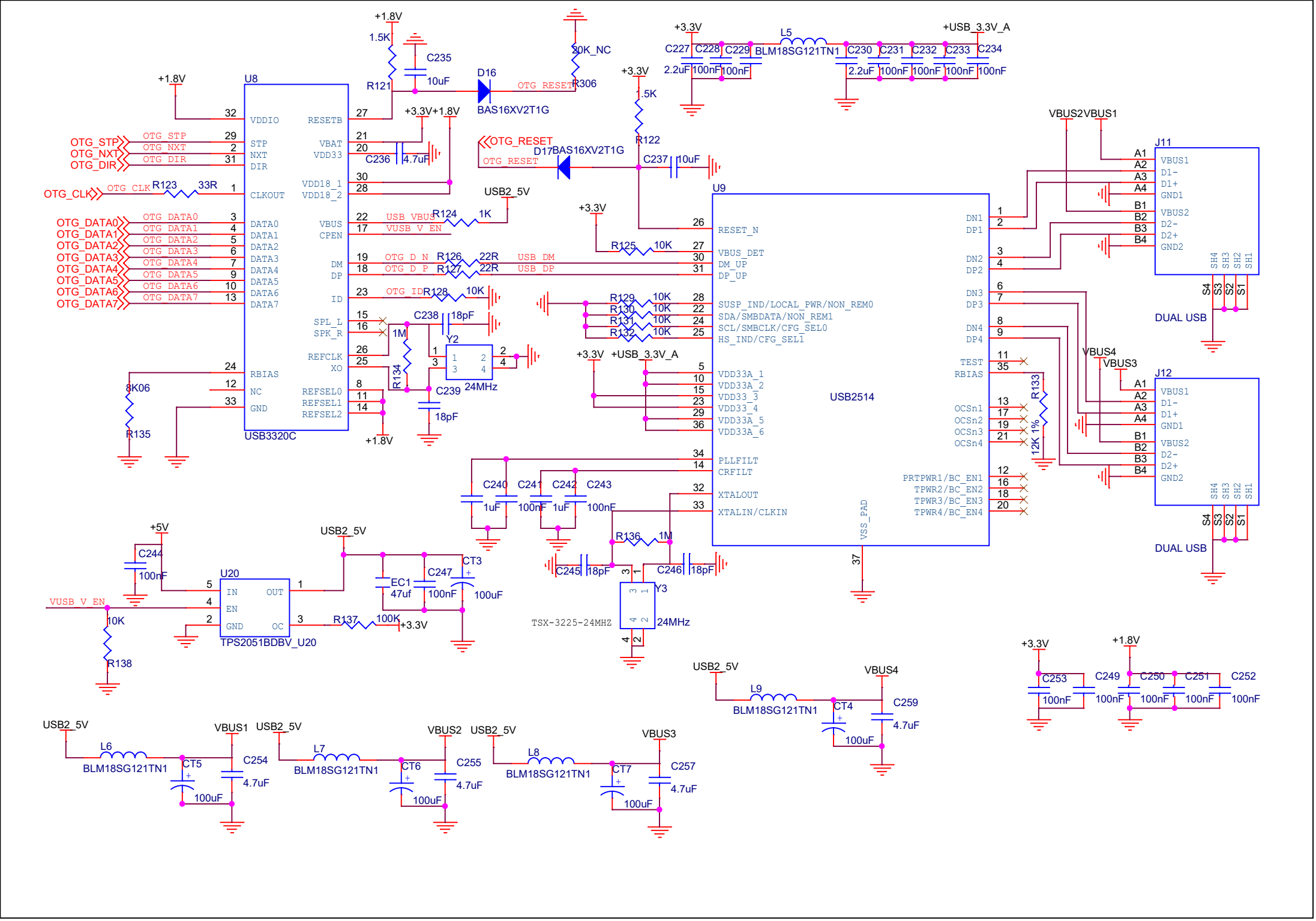
U8
USB3320C
VDDIO
STP
NXT
DIR
CLKOUT
DATA0
DATA1
DATA2
DATA3
DATA4
DATA5
DATA6
DATA7
RESETB
VBAT
VDD33
VDD18_1
VDD18_2
VBUS
CPEN
DM
DP
ID
SPL_L
SPK_R
REFCLK
XO
RBIAS
NC
GND
REFSEL0
REFSEL1
REFSEL2
OTG_STP
OTG_NXT
OTG_DIR
OTG_CLK
OTG_DATA0
OTG_DATA1
OTG_DATA2
OTG_DATA3
OTG_DATA4
OTG_DATA5
OTG_DATA6
OTG_DATA7
OTG_RESET
USB_VBUS
VUSB_V_EN
OTG_D_N
OTG_D_P
OTG_ID
USB_DM
USB_DP
+1.8V
+3.3V
USB2_5V
+USB_3.3V_A
+5V
U9
USB2514
RESET_N
VBUS_DET
DM_UP
DP_UP
SUSP_IND/LOCAL_PWR/NON_REM0
SDA/SMBDATA/NON_REM1
SCL/SMBCLK/CFG_SEL0
HS_IND/CFG_SEL1
VDD33A_1
VDD33A_2
VDD33_3
VDD33_4
VDD33A_5
VDD33A_6
PLLFILT
CRFILT
XTALOUT
XTALIN/CLKIN
VSS_PAD
DN1
DP1
DN2
DP2
DN3
DP3
DN4
DP4
TEST
RBIAS
OCSn1
OCSn2
OCSn3
OCSn4
PRTPWR1/BC_EN1
TPWR2/BC_EN2
TPWR3/BC_EN3
TPWR4/BC_EN4
J11
J12
VBUS1
D1-
D1+
GND1
VBUS2
D2-
D2+
GND2
SH4
SH3
SH2
SH1
S4
S3
S2
S1
DUAL USB
VBUS2VBUS1
VBUS4
VBUS3
U20
TPS2051BDBV_U20
IN
EN
GND
OUT
OC
Y2
24MHz
Y3
TSX-3225-24MHZ
BLM18SG121TN1
BAS16XV2T1G
D16
D17
R121
R122
R123
R124
R125
R126
R127
R128
R129
R130
R131
R132
R133
R134
R135
R136
R137
R138
R306
20K_NC
8K06
12K 1%
C235
C236
C237
C238
C239
C240
C241
C242
C243
C244
C245
C246
C247
C227
C228
C229
C230
C231
C232
C233
C234
C249
C250
C251
C252
C253
C254
C255
C257
C259
EC1
CT3
CT4
CT5
CT6
CT7
L5
L6
L7
L8
L9

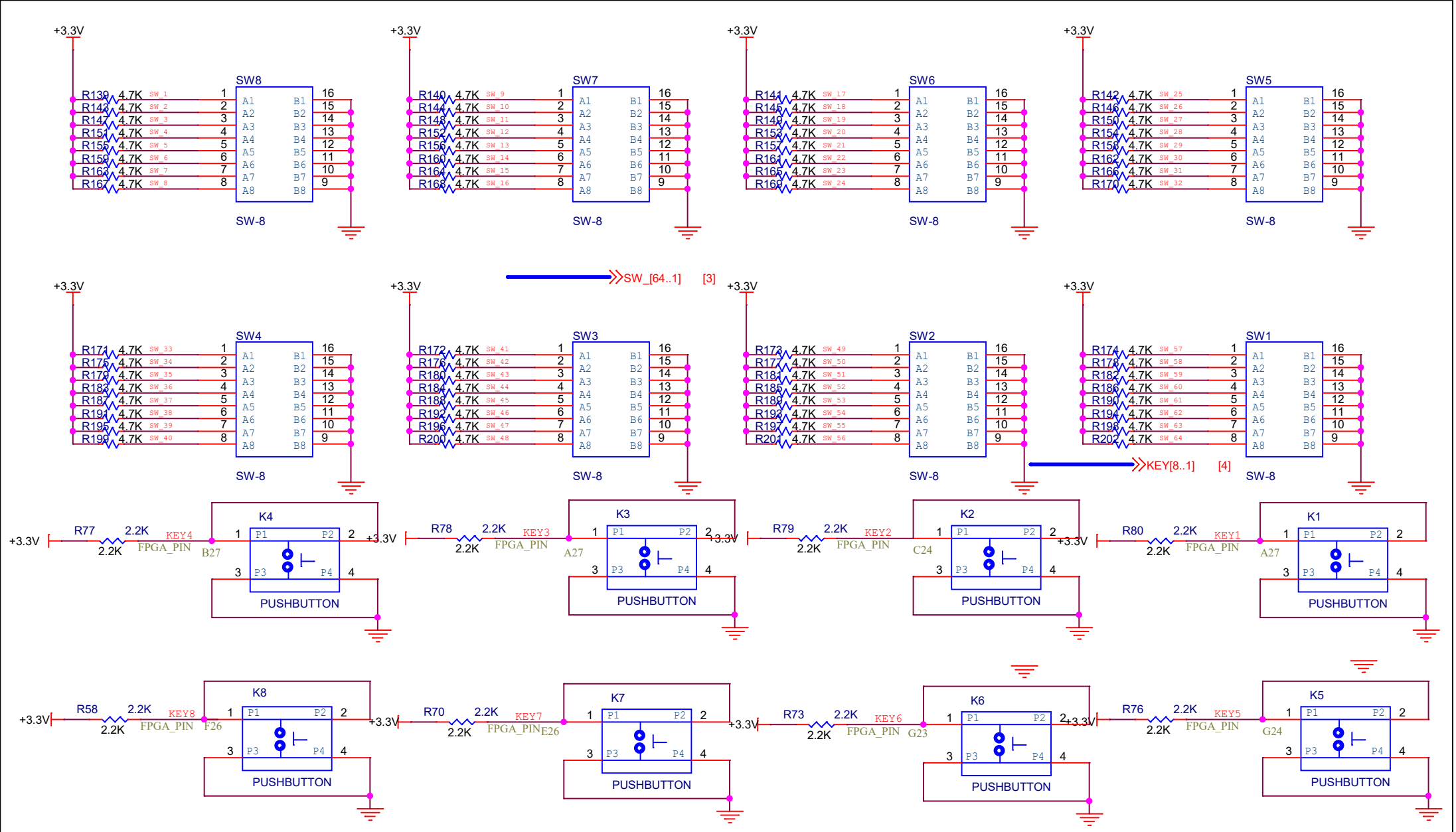
+3.3V
SW8
SW7
SW6
SW5
SW4
SW3
SW2
SW1
SW-8
4.7K
SW_[64..1]
[3]
KEY[8..1]
[4]
K4
K3
K2
K1
K8
K7
K6
K5
R77
R78
R79
R80
R58
R70
R73
R76
2.2K
KEY4
KEY3
KEY2
KEY1
KEY8
KEY7
KEY6
KEY5
FPGA_PIN
B27
A27
C24
F26
E26
G23
G24
PUSHBUTTON

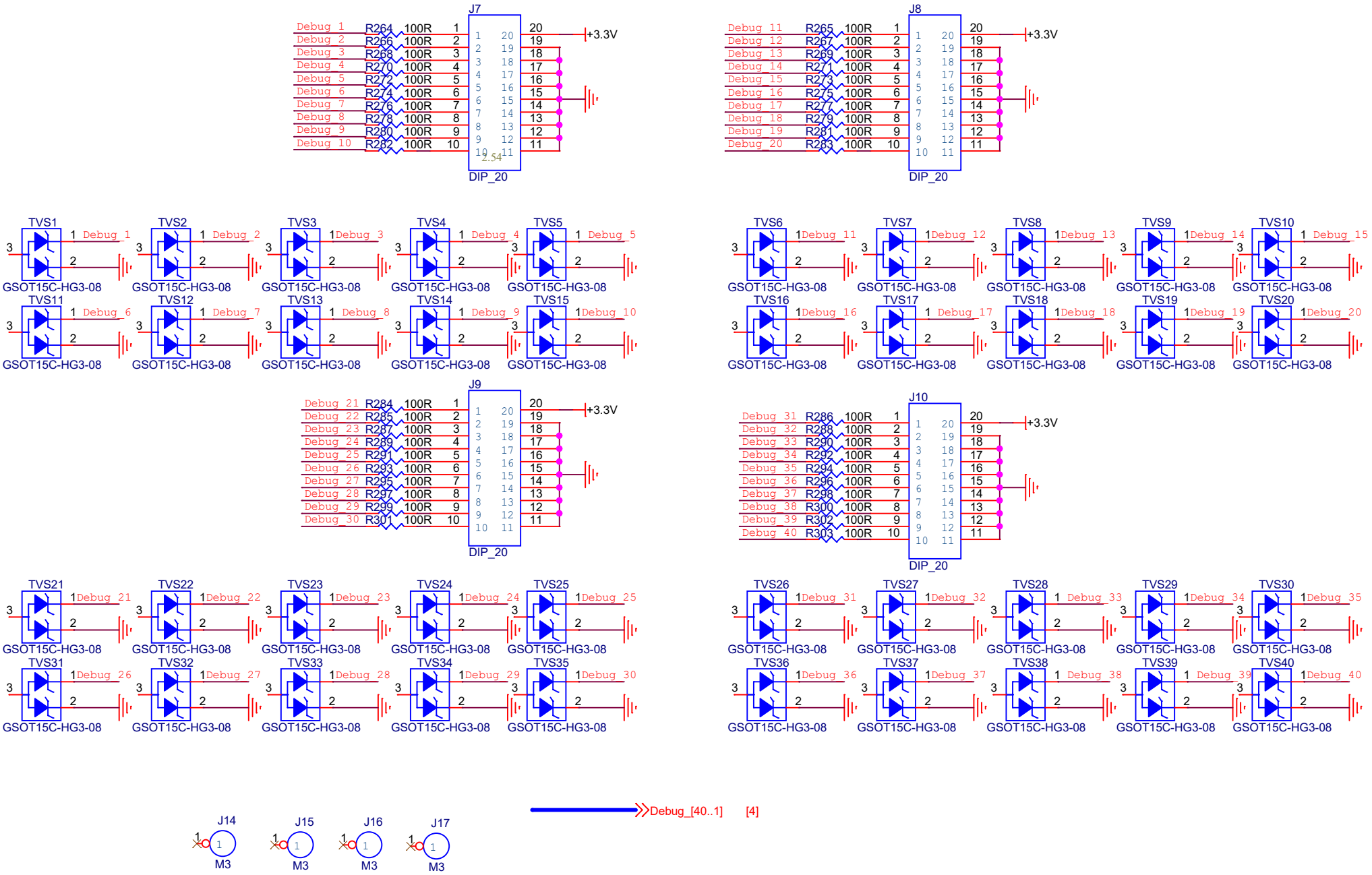
J7
Debug_1 R264 100R 1
Debug_2 R266 100R 2
Debug_3 R268 100R 3
Debug_4 R270 100R 4
Debug_5 R272 100R 5
Debug_6 R274 100R 6
Debug_7 R276 100R 7
Debug_8 R278 100R 8
Debug_9 R280 100R 9
Debug_10 R282 100R 10
+3.3V
2.54
DIP_20
J8
Debug_11 R265 100R 1
Debug_12 R267 100R 2
Debug_13 R269 100R 3
Debug_14 R271 100R 4
Debug_15 R273 100R 5
Debug_16 R275 100R 6
Debug_17 R277 100R 7
Debug_18 R279 100R 8
Debug_19 R281 100R 9
Debug_20 R283 100R 10
+3.3V
DIP_20
TVS1 Debug_1
TVS2 Debug_2
TVS3 Debug_3
TVS4 Debug_4
TVS5 Debug_5
TVS6 Debug_11
TVS7 Debug_12
TVS8 Debug_13
TVS9 Debug_14
TVS10 Debug_15
TVS11 Debug_6
TVS12 Debug_7
TVS13 Debug_8
TVS14 Debug_9
TVS15 Debug_10
TVS16 Debug_16
TVS17 Debug_17
TVS18 Debug_18
TVS19 Debug_19
TVS20 Debug_20
GSOT15C-HG3-08
J9
Debug_21 R284 100R 1
Debug_22 R285 100R 2
Debug_23 R287 100R 3
Debug_24 R289 100R 4
Debug_25 R291 100R 5
Debug_26 R293 100R 6
Debug_27 R295 100R 7
Debug_28 R297 100R 8
Debug_29 R299 100R 9
Debug_30 R301 100R 10
+3.3V
DIP_20
J10
Debug_31 R286 100R 1
Debug_32 R288 100R 2
Debug_33 R290 100R 3
Debug_34 R292 100R 4
Debug_35 R294 100R 5
Debug_36 R296 100R 6
Debug_37 R298 100R 7
Debug_38 R300 100R 8
Debug_39 R302 100R 9
Debug_40 R303 100R 10
+3.3V
DIP_20
TVS21 Debug_21
TVS22 Debug_22
TVS23 Debug_23
TVS24 Debug_24
TVS25 Debug_25
TVS26 Debug_31
TVS27 Debug_32
TVS28 Debug_33
TVS29 Debug_34
TVS30 Debug_35
TVS31 Debug_26
TVS32 Debug_27
TVS33 Debug_28
TVS34 Debug_29
TVS35 Debug_30
TVS36 Debug_36
TVS37 Debug_37
TVS38 Debug_38
TVS39 Debug_39
TVS40 Debug_40
J14
J15
J16
J17
M3
Debug_[40..1] [4]

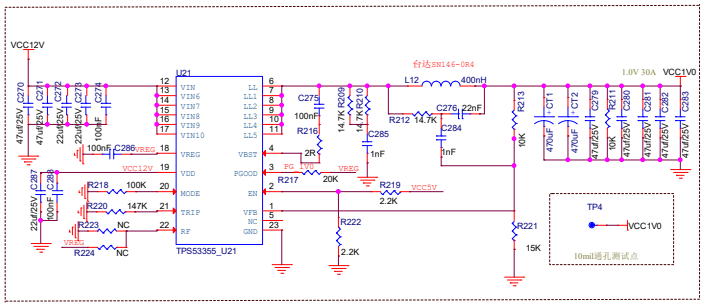
VCC12V
U21
TPS53355_U21
台达SN146-0R4
1.0V 30A
VCC1V0
L12 400nH
R212 14.7K
R213 10K
R221 15K
R222 2.2K
R219 2.2K
R217 20K
R216 2R
R218 100K
R220 147K
R223 NC
R224 NC
TP4
VCC1V0
10mil通孔测试点

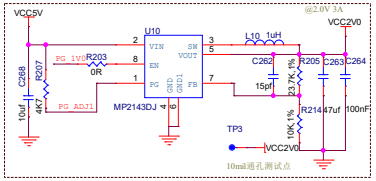
VCC5V
@2.0V 3A
U10
MP2143DJ
L10 1uH
VCC2V0
TP3
VCC2V0
10mil通孔测试点

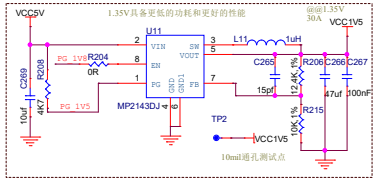
VCC5V
1.35V具备更低的功耗和更好的性能
@@1.35V 30A
U11
MP2143DJ
L11 1uH
VCC1V5
TP2
VCC1V5
10mil通孔测试点

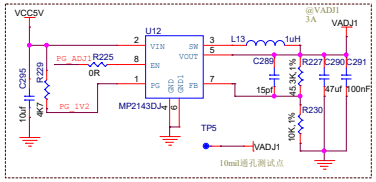
VCC5V
@VADJ1 3A
U12
MP2143DJ
L13 1uH
VADJ1
TP5
VADJ1
10mil通孔测试点

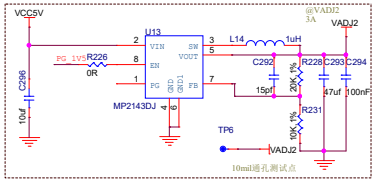
VCC5V
@VADJ2 3A
U13
MP2143DJ
L14 1uH
VADJ2
TP6
VADJ2
10mil通孔测试点

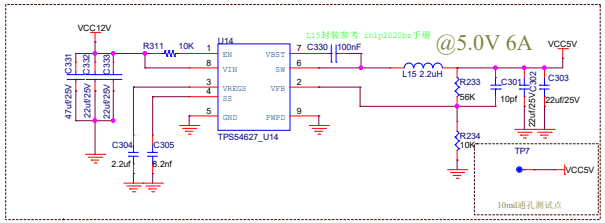
VCC12V
U14
TPS54627_U14
L15封装参考 ihlp2020bz手册
@5.0V 6A
VCC5V
L15 2.2uH
R233 56K
R234 10K
TP7
VCC5V
10mil通孔测试点

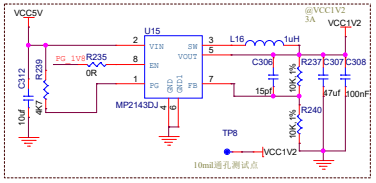
VCC5V
@VCC1V2 3A
U15
MP2143DJ
L16 1uH
VCC1V2
TP8
VCC1V2
10mil通孔测试点

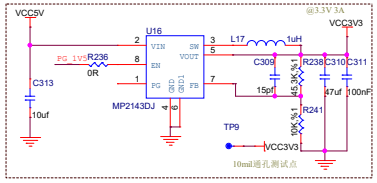
VCC5V
@3.3V 3A
U16
MP2143DJ
L17 1uH
VCC3V3
TP9
VCC3V3
10mil通孔测试点

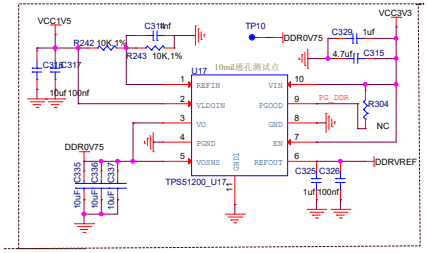
VCC1V5
VCC3V3
TP10
DDR0V75
U17
TPS51200_U17
10mil通孔测试点
DDRVREF

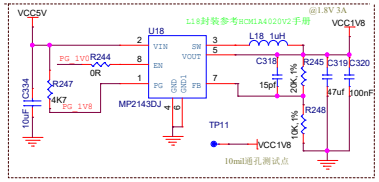
VCC5V
@1.8V 3A
L18封装参考HCM1A4020V2手册
U18
MP2143DJ
L18 1uH
VCC1V8
TP11
VCC1V8
10mil通孔测试点

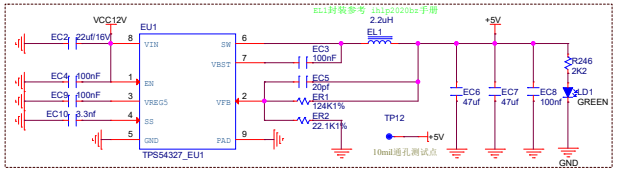
EL1封装参考 ihlp2020bz手册
VCC12V
EU1
TPS54327_EU1
EL1 2.2uH
+5V
TP12
+5V
10mil通孔测试点
LED1 GREEN
GND

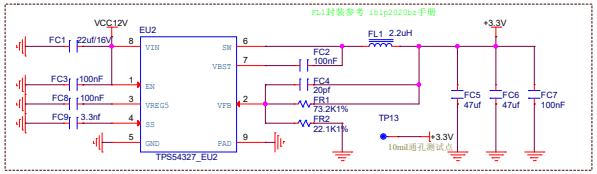
FL1封装参考 ihlp2020bz手册
VCC12V
EU2
TPS54327_EU2
FL1 2.2uH
+3.3V
TP13
+3.3V
10mil通孔测试点

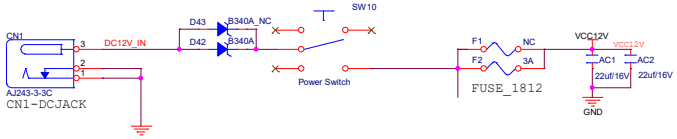
CN1
AJ243-3-3C
CN1-DCJACK
DC12V_IN
D43
D42
B340A_NC
B340A
SW10
Power Switch
F1
F2
NC
3A
FUSE_1812
VCC12V
AC1
AC2
22uf/16V
GND

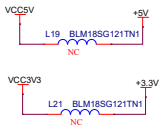
VCC5V
+5V
L19 BLM18SG121TN1
NC
VCC3V3
+3.3V
L21 BLM18SG121TN1
NC

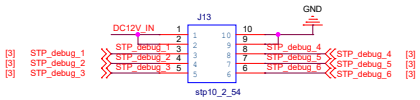
J13
DC12V_IN
GND
STP_debug_1
STP_debug_2
STP_debug_3
STP_debug_4
STP_debug_5
STP_debug_6
stp10_2_54

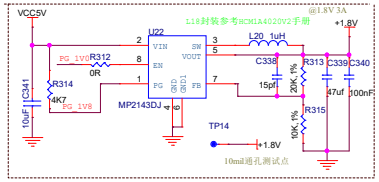
VCC5V
@1.8V 3A
L18封装参考HCM1A4020V2手册
U22
MP2143DJ
L20 1uH
+1.8V
TP14
+1.8V
10mil通孔测试点