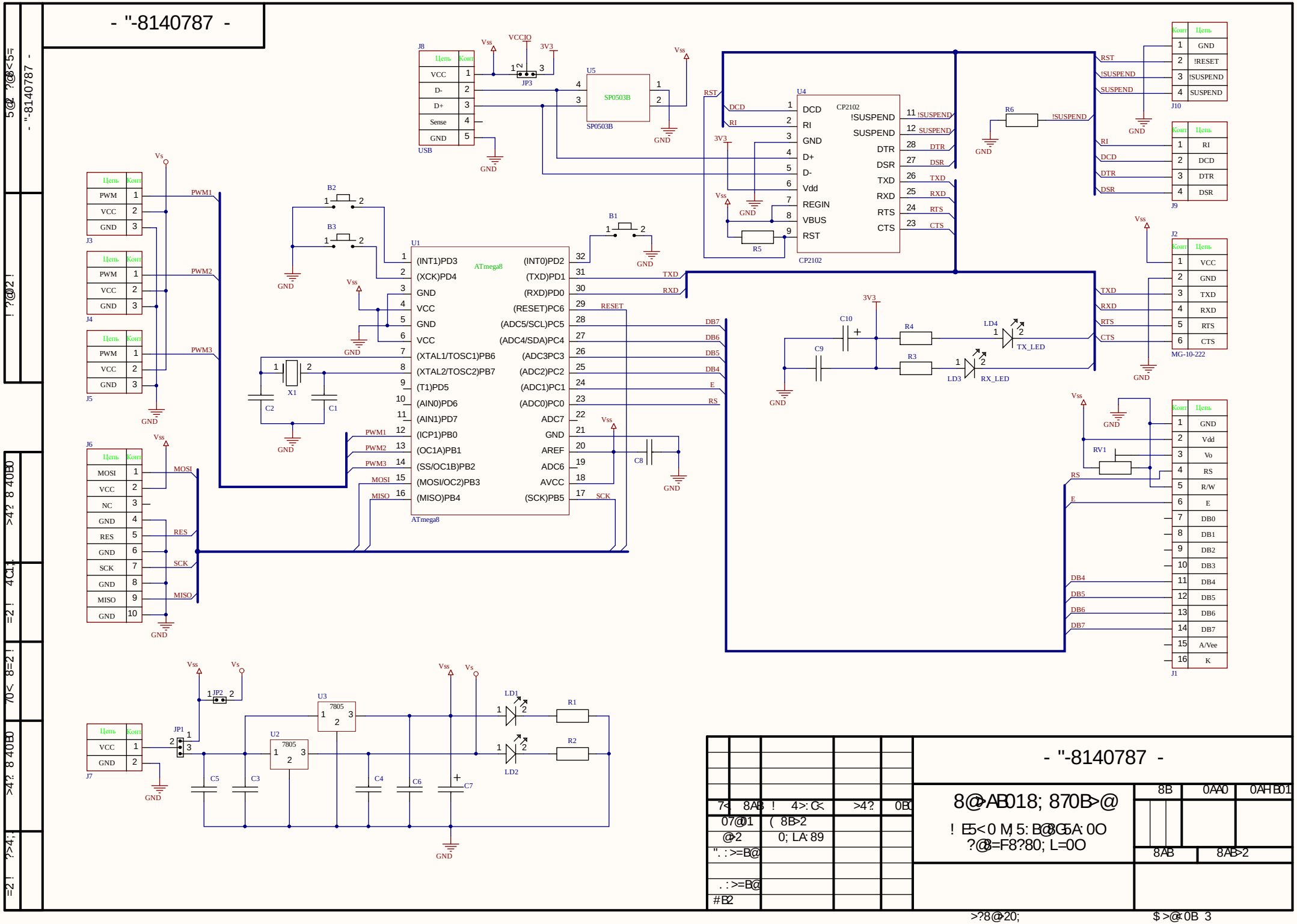
- "-8140787 -
U1
ATmega8
(INT1)PD3
(XCK)PD4
GND
VCC
GND
VCC
(XTAL1/TOSC1)PB6
(XTAL2/TOSC2)PB7
(T1)PD5
(AIN0)PD6
(AIN1)PD7
(ICP1)PB0
(OC1A)PB1
(SS/OC1B)PB2
(MOSI/OC2)PB3
(MISO)PB4
(INT0)PD2
(TXD)PD1
(RXD)PD0
(RESET)PC6
(ADC5/SCL)PC5
(ADC4/SDA)PC4
(ADC3PC3
(ADC2)PC2
(ADC1)PC1
(ADC0)PC0
ADC7
GND
AREF
ADC6
AVCC
(SCK)PB5
U4
CP2102
DCD
RI
GND
D+
D-
Vdd
REGIN
VBUS
RST
!SUSPEND
SUSPEND
DTR
DSR
TXD
RXD
RTS
CTS
U5
SP0503B
J8
USB
VCC
D-
D+
Sense
GND
J1
MG-10-222
J2
J3
J4
J5
J6
J7
J9
J10
B1
B2
B3
X1
C1
C2
C3
C4
C5
C6
C7
C8
C9
C10
R1
R2
R3
R4
R5
R6
RV1
LD1
LD2
LD3
LD4
TX_LED
RX_LED
U2
U3
7805
JP1
JP2
JP3
Vss
Vs
VCCIO
3V3
PWM1
PWM2
PWM3
MOSI
MISO
RES
SCK
RESET
DB0
DB1
DB2
DB3
DB4
DB5
DB6
DB7
E
RS
R/W
A/Vee
K
Vdd
Vo
- "-8140787 -
8@>AB018; 870B>@
8B
0AA0
0AHB01
8AB
8AB>2