REV	DESCRIPTION	BY	DATE	APR

NOTES: UNLESS OTHERWISE SPECIFIED:

1. APPLICABLE STANDARDS/SPECIFICATIONS:
ASME Y14.5M-2009, DIMENSIONING AND TOLERANCING.
ASME Y14.38-1999, ABBREVIATIONS AND ACRONYMS.
APPLIED MATERIALS 0251-05096:INCH/MILLIMETER CONVERSION PROCEDURE.

2. SHALL COMPLY WITH PRODUCT EHS REQUIREMENTS PER APPLIED MATERIALS 0250-27105.

3. APPLIED MATERIALS PACKAGING ENGINEERING MUST APPROVE ALL ENGINNERING CHANGES.

4. IF EXACT NOMINAL SIZES DUE TO METRIC EQUIVALENTS ARE NOT AVAILABLE FOR ITEMS WHERE DIMENSIONS ARE NOT CRITICAL SUCH AS CLEATS/LUMBER, METRIC SUBSTITUTIONS ARE PERMITTED

5. CRATING AND STENCILING PER APPLIED MATERIALS 0251-70054, LOCATIONS APPROXIMATELY WHERE SHOWN.

6. ADD CRATE ASSY PN STENCIL ABOVE BASE PART NUMBER ON BASE SKID, AND ABOVE CAP PN ON CAP CLEAT.

7. STD CRATE INSIDE DIMS (ID IN/[MM]) 80.00 X 44.00 X 86.00
[2032.00 X 1117.60 X 2184.40]
STD CRATE OUTSIDE DIMS (OD IN/[MM]): 82.00 X 46.00 X 92.00
[2082.80 X 1168.40 X 2336.80]

8. PRODUCT WEIGHT: LBS/ (KG.) 796/ (362) ± 5%
GROSS WEIGHT: LBS/ (KG.) 1111/ (505) ± 5%

9. LABELING MUST BE PER APPLIED MATERIALS 0251-07710.

10. MUST MEET GENERAL PACKAGING REQUIREMENTS PER APPLIED MATERIALS 0250-00098.

11. ALL PANELS SHOULD BE ASSEMBLED BY SCREWS, NOT NAILS.

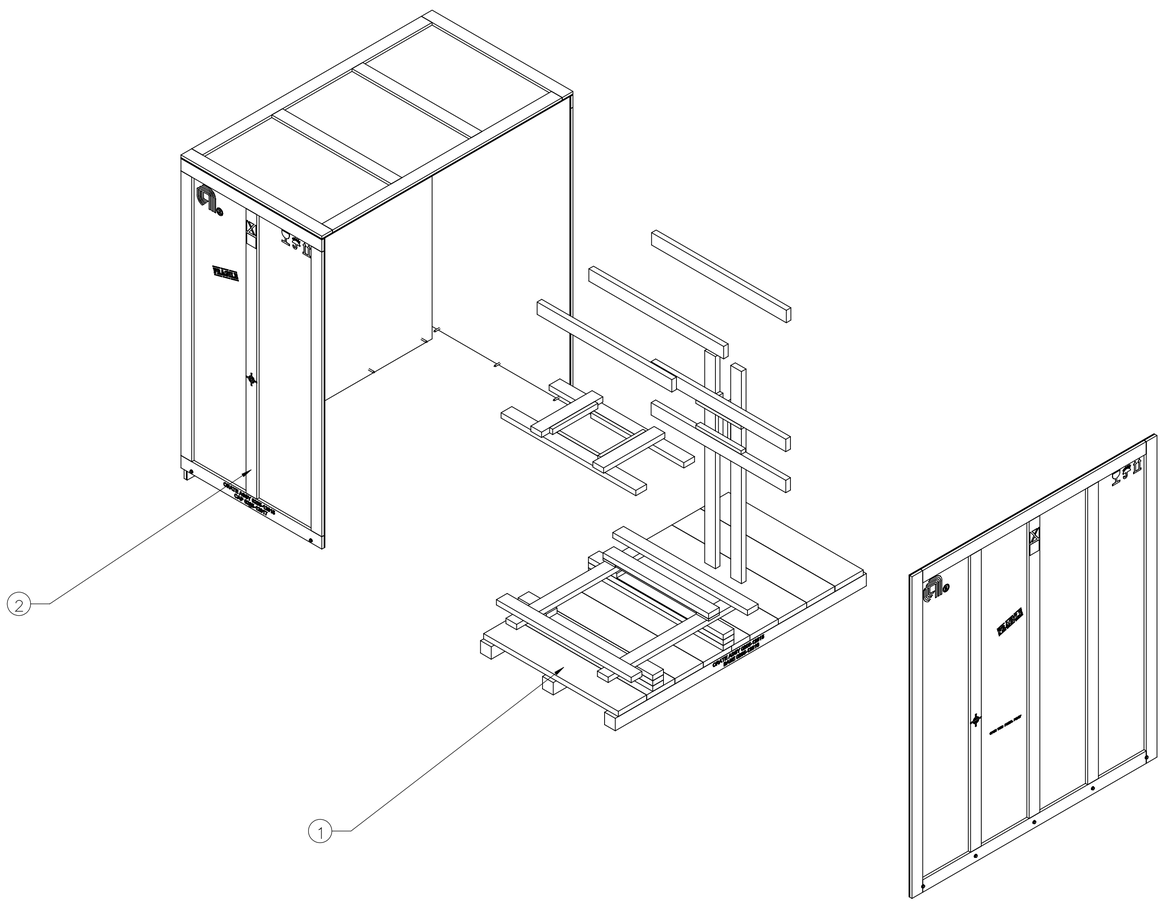

ITEM	QTY	PART NO.	DESCRIPTION	TcENG NO.
2	1	0205-12617	CRATE CAP, I.D.80.00 X 44.00 X 86.00	
1	1	0205-12616	SHIPPING BASE, DLG_EYE LIFT DLT 2K HV	

APPROVALS		DATE
DESIGNED BY	NELSON PENG	2024/12/19
DRAWN BY	NELSON PENG	2024/12/23
REVISED BY		
MFG ENGR		
CHECKED BY		

TOLERANCES: DECIMALS .XX ± .12 .XXX ± .- ANGLES ± SURFACES ✓

UNLESS OTHERWISE SPECIFIED: ALL DIMENSIONS ARE IN INCHES, REMOVE BURRS AND SHARP EDGES.

MATERIAL: SEE BOM

FINISH: NONE

THIRD ANGLE PROJECTION

APPLIED MATERIALS CONFIDENTIAL: THIS DOCUMENT AND THE INFORMATION CONTAINED IN IT ARE CONFIDENTIAL, AND CANNOT BE COPIED OR DISCLOSED IN WHOLE OR IN PART WITHOUT THE EXPRESS WRITTEN CONSENT OF APPLIED MATERIALS, INC.

APPLIED MATERIALS®
3050 BOWERS AVE., SANTA CLARA, CA 95054

TITLE: CRATE ASSEMBLY, DLG_EYE LIFT DLT 2K HV

SIZE: D | PART NO.: 0205-12615 | REV: 01

WEIGHT: -LB REF | SHEET 1 OF 1