ECO	STATUS

NOTES: UNLESS OTHERWISE SPECIFIED:

1. APPLICABLE STANDARDS/SPECIFICATIONS:
   ASME Y14.5-2009, DIMENSIONING AND TOLERANCING.
   ASME Y14.38-1999, ABBREVIATIONS AND ACRONYMS.
   APPLIED MATERIALS 0251-05096: INCH/MILLIMETER CONVERSION PROCEDURE
2. SHALL COMPLY WITH PRODUCT EHS REQUIREMENTS PER APPLIED MATERIALS 0250-27105.
3. APPLIED MATERIALS PACKAGING ENGINEERING MUST APPROVE ALL ENGINEERING CHANGES.
4. IF EXACT NOMINAL SIZES DUE TO METRIC EQUIVALENTS ARE NOT AVAILABLE FOR ITEMS WHERE DIMENSIONS ARE NOT CRITICAL SUCH AS CLEATS/LUMBER, METRIC SUBSTITUTIONS ARE PERMITTED, CONSULT PACKAGING ENGINEERING FOR CLARIFICATIONS OF CRITICAL VS. NONCRITICAL DIMENSIONS.
5. CRATING AND STENCILING PER APPLIED MATERIALS 0251-70054, LOCATIONS APPROXIMATELY WHERE SHOWN.

△6 INSTALL SHEETS OF BARRIER AND POLY FILM PER APPLIED MATERIALS 0251-70054 USING SANDWICH METHOD.

△7 SECURE PRODUCT USING BATTENS AND APPROPRIATE STRAPS OR BANDING.

8. PILOT HOLES SHALL BE PRE-DRILLED PRIOR TO INSTALLING LAG BOLTS.
9. FLOORBOARD QUANTITY AND WIDTH CAN BE SUBSTITUTED BASED ON AVAILABILITY.
10. LABELING MUST BE PER APPLIED MATERIALS 0251-07710.
11. MUST MEET GENERAL PACKAGING REQUIREMENTS PER APPLIED MATERIALS 0250-00098.

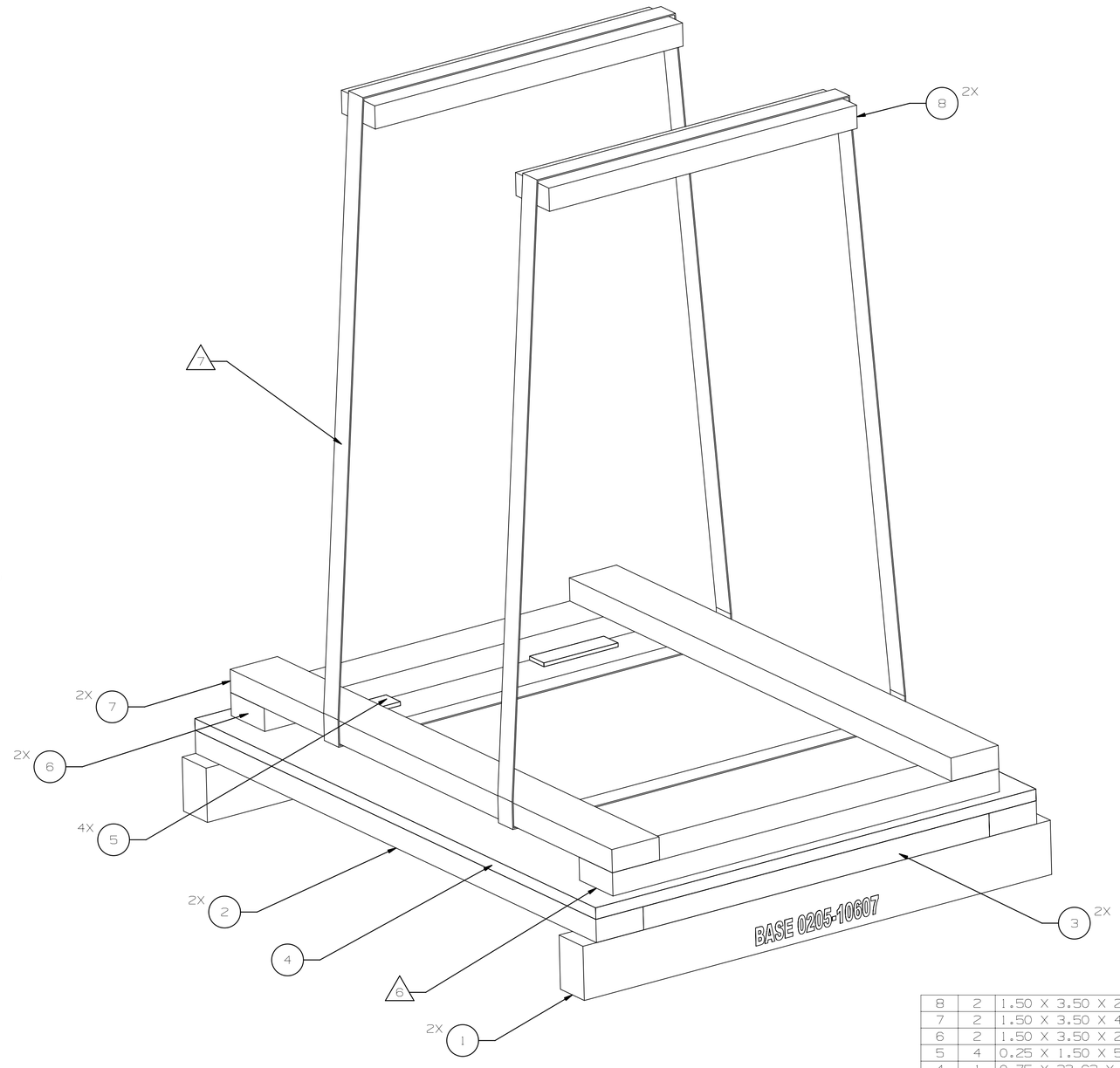

ITEM	QTY	DESCRIPTION	TC PART No.
8	2	1.50 X 3.50 X 22.80 BATTEN, LUMBER	
7	2	1.50 X 3.50 X 40.00 BLOCK, LUMBER	
6	2	1.50 X 3.50 X 28.63 BLOCK, LUMBER	
5	4	0.25 X 1.50 X 5.50 RISER, PLYWOOD	
4	1	0.75 X 32.63 X 42.00 PLATFORM, PLYWOOD	
3	2	1.50 X 3.50 X 25.63 FLOORBOARD, LUMBER	
2	2	1.50 X 3.50 X 42.00 FLOORBOARD, LUMBER	
1	2	2.50 X 3.50 X 34.63 SKID, LUMBER	

APPROVALS	DATE
DESIGNED BY	
DRAWN BY	
REVISED BY	
MFG ENGR	
CHECKED BY	

THIRD ANGLE PROJECTION

APPLIED MATERIALS CONFIDENTIAL: THIS DOCUMENT AND THE INFORMATION CONTAINED IN IT ARE CONFIDENTIAL, AND CANNOT BE COPIED OR DISCLOSED IN WHOLE OR IN PART WITHOUT THE EXPRESS WRITTEN CONSENT OF **APPLIED MATERIALS INC.**

TOLERANCES

DECIMALS	ANGLES	SURFACES
.XX ± .13 .XXX ±	± 1°	✓

UNLESS OTHERWISE SPECIFIED: ALL DIMENSIONS ARE IN INCHES. REMOVE BURRS AND SHARP EDGES.

MATERIAL: SEE BOM

FINISH: NONE

APPLIED MATERIALS®
3050 BOWERS AVE., SANTA CLARA, CA 95054

TITLE: SHIPPING BASE
EYE CART,
DLG

SIZE: D | PART NO.: 0205-10607 | REV: 01

WEIGHT: 62.93 LBS | SHEET: Sheet 1 of 3

SHIPPING BASE LAYOUT, ITEM 1-5

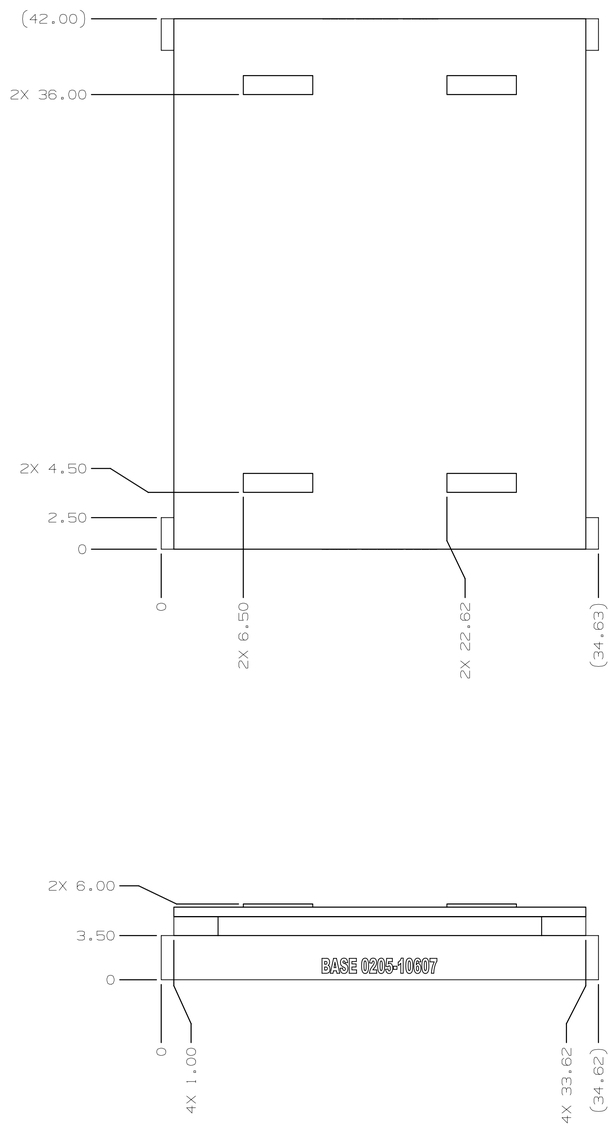

SHIPPING BASE LAYOUT, ITEM 1-7

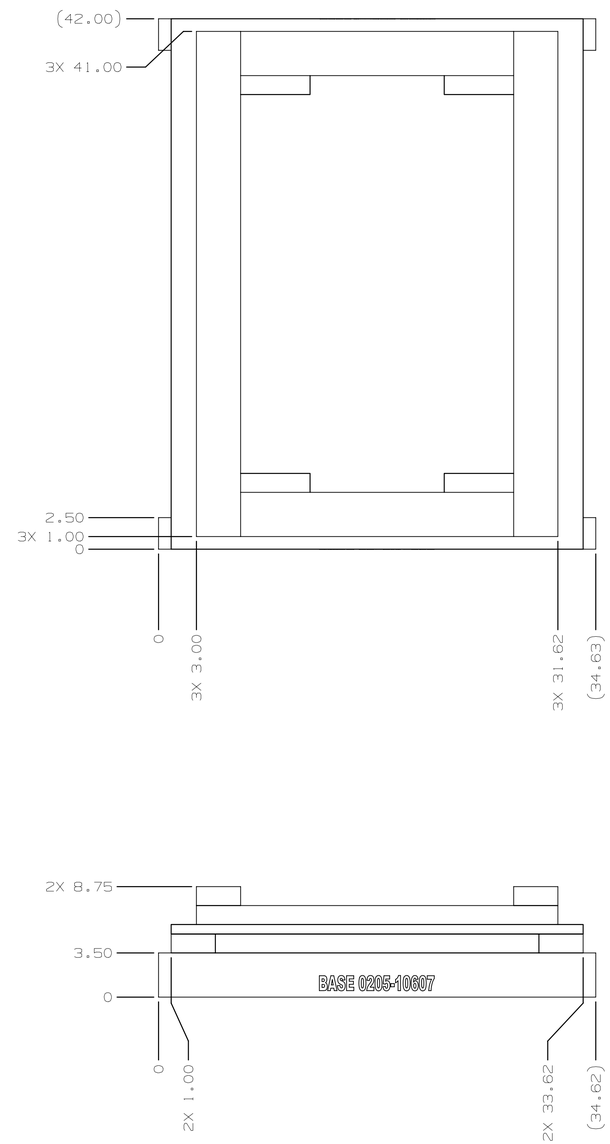

UNLESS OTHERWISE SPECIFIED:
ALL DIMENSIONS ARE IN INCHES.
REMOVE BURRS AND SHARP EDGES.

APPLIED MATERIALS®
3050 BOWERS AVE., SANTA CLARA, CA 95054

TITLE
SHIPPING BASE
EYE CART,
DLG

SIZE	PART NO.	REV
D	0205-10607	01

WEIGHT 62.93 LBS
SHEET Sheet 2 of 3

PRODUCT ORIENTATION AND SECUREMENT ON SHIPPING BASE

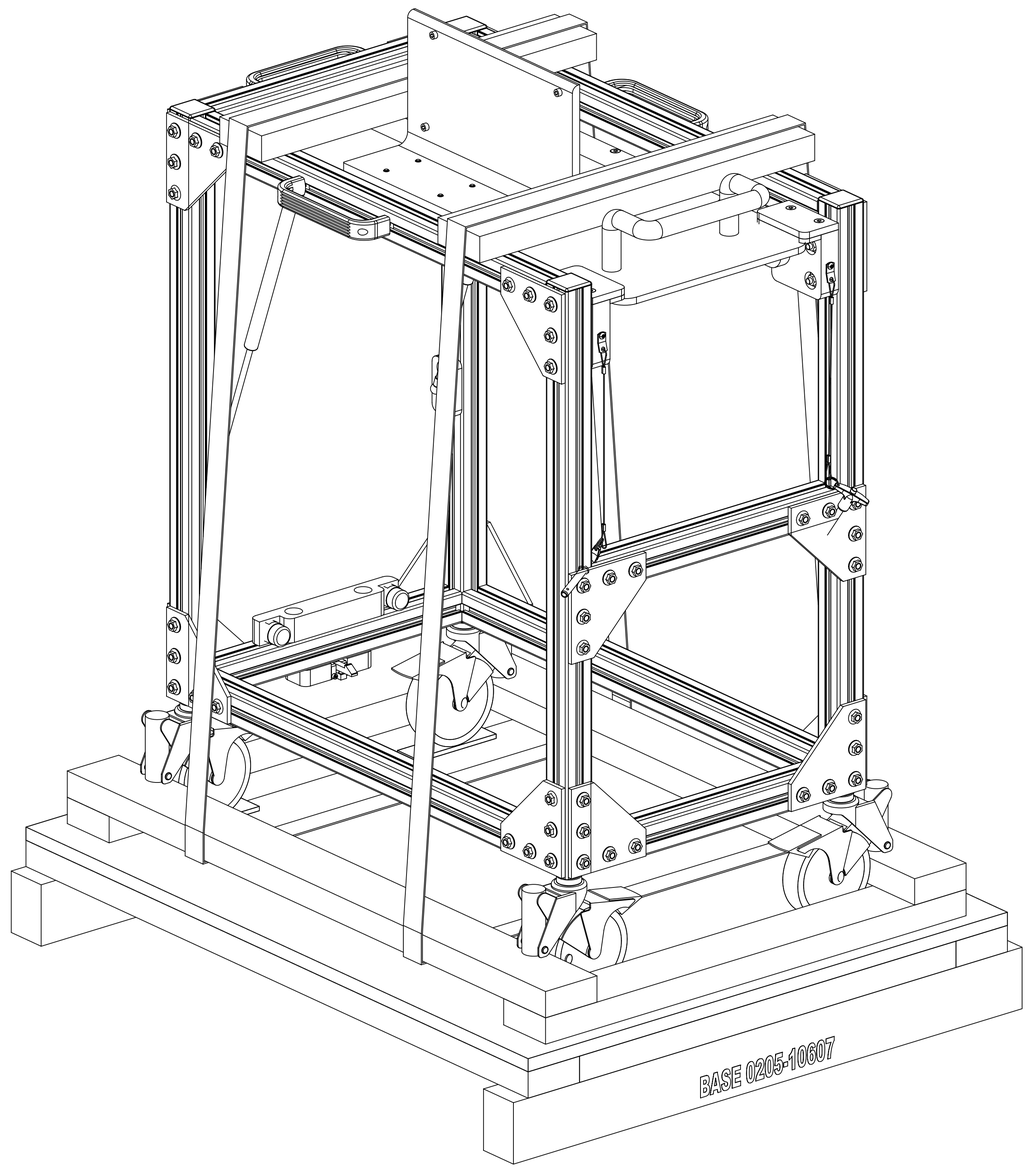

APPLIED MATERIALS®

3050 BOWERS AVE., SANTA CLARA, CA 95054

TITLE

SHIPPING BASE

EYE CART,

DLG

UNLESS OTHERWISE SPECIFIED:
ALL DIMENSIONS ARE IN INCHES.
REMOVE BURRS AND SHARP EDGES.

SIZE	PART NO.	REV
D	0205-10607	01

WEIGHT 62.93 LBS

SHEET Sheet 3 of 3