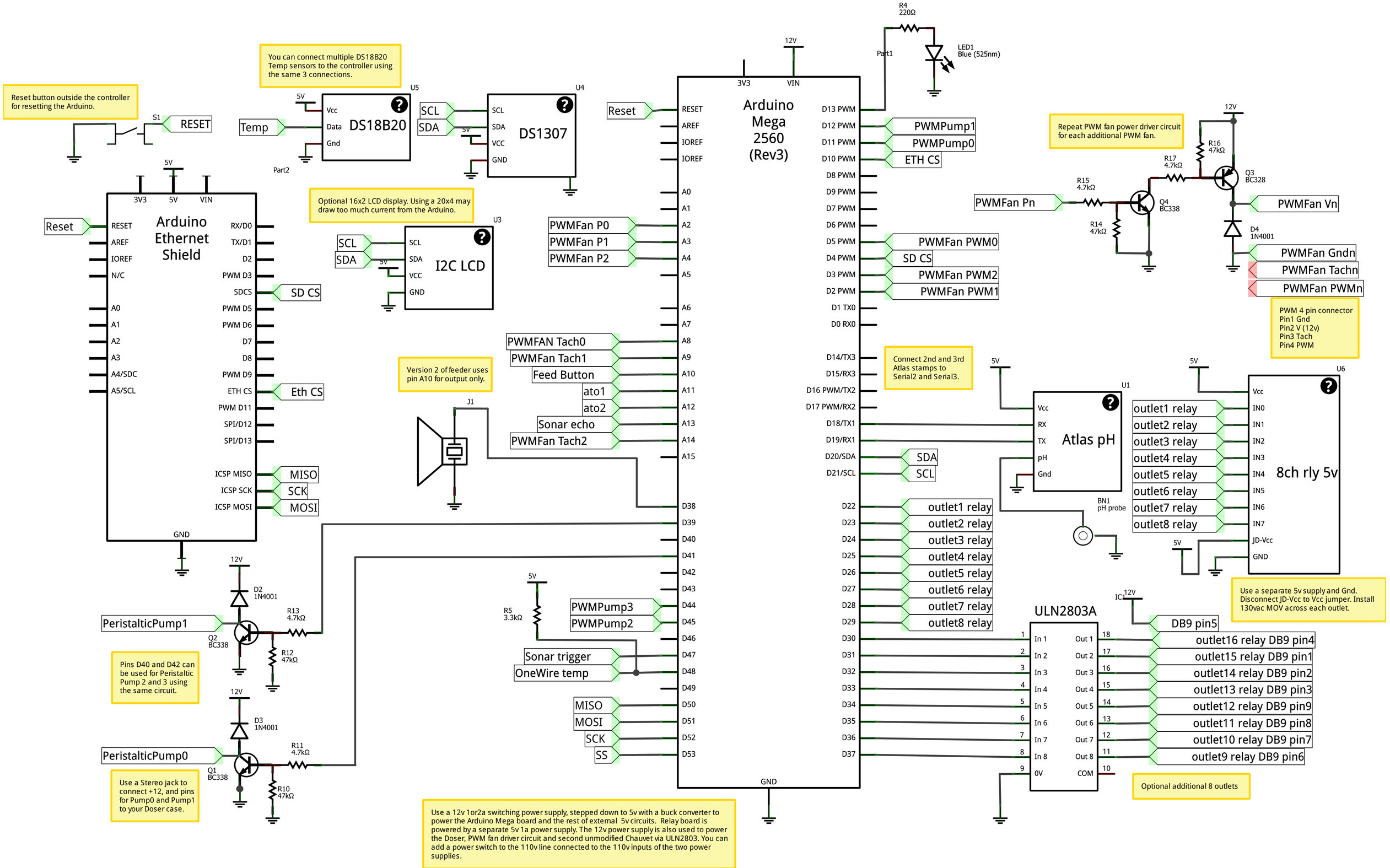
Reset button outside the controller for resetting the Arduino.
S1
RESET
You can connect multiple DS18B20 Temp sensors to the controller using the same 3 connections.
5V
Temp
Vcc
Data
Gnd
DS18B20
U5
Part2
SCL
SDA
SCL
SDA
VCC
GND
DS1307
U4
Optional 16x2 LCD display. Using a 20x4 may draw too much current from the Arduino.
SCL
SDA
SCL
SDA
VCC
GND
I2C LCD
U3
3V3
5V
VIN
Reset
RESET
AREF
IOREF
N/C
A0
A1
A2
A3
A4/SDC
A5/SCL
Arduino Ethernet Shield
RX/D0
TX/D1
D2
PWM D3
SDCS
PWM D5
PWM D6
D7
D8
PWM D9
ETH CS
PWM D11
SPI/D12
SPI/D13
SD CS
Eth CS
ICSP MISO
ICSP SCK
ICSP MOSI
MISO
SCK
MOSI
GND
12V
D2
1N4001
R13
4.7kΩ
PeristalticPump1
Q2
BC338
R12
47kΩ
Pins D40 and D42 can be used for Peristaltic Pump 2 and 3 using the same circuit.
12V
D3
1N4001
R11
4.7kΩ
PeristalticPump0
Q1
BC338
R10
47kΩ
Use a Stereo jack to connect +12, and pins for Pump0 and Pump1 to your Doser case.
Version 2 of feeder uses pin A10 for output only.
J1
Reset
PWMFan P0
PWMFan P1
PWMFan P2
PWMFAN Tach0
PWMFan Tach1
Feed Button
ato1
ato2
Sonar echo
PWMFan Tach2
5V
R5
3.3kΩ
PWMPump3
PWMPump2
Sonar trigger
OneWire temp
MISO
MOSI
SCK
SS
3V3
VIN
Arduino Mega 2560 (Rev3)
RESET
AREF
IOREF
IOREF
A0
A1
A2
A3
A4
A5
A6
A7
A8
A9
A10
A11
A12
A13
A14
A15
D38
D39
D40
D41
D42
D43
D44
D45
D46
D47
D48
D49
D50
D51
D52
D53
GND
D13 PWM
D12 PWM
D11 PWM
D10 PWM
D8 PWM
D9 PWM
D7 PWM
D6 PWM
D5 PWM
D4 PWM
D3 PWM
D2 PWM
D1 TX0
D0 RX0
D14/TX3
D15/RX3
D16 PWM/TX2
D17 PWM/RX2
D18/TX1
D19/RX1
D20/SDA
D21/SCL
D22
D23
D24
D25
D26
D27
D28
D29
D30
D31
D32
D33
D34
D35
D36
D37
12V
R4
220Ω
Part1
LED1
Blue (525nm)
PWMPump1
PWMPump0
ETH CS
PWMFan PWM0
SD CS
PWMFan PWM2
PWMFan PWM1
Connect 2nd and 3rd Atlas stamps to Serial2 and Serial3.
SDA
SCL
outlet1 relay
outlet2 relay
outlet3 relay
outlet4 relay
outlet5 relay
outlet6 relay
outlet7 relay
outlet8 relay
Repeat PWM fan power driver circuit for each additional PWM fan.
12V
R16
47kΩ
R17
4.7kΩ
Q3
BC328
R15
4.7kΩ
PWMFan Pn
Q4
BC338
R14
47kΩ
PWMFan Vn
D4
1N4001
PWMFan Gndn
PWMFan Tachn
PWMFan PWMn
PWM 4 pin connector
Pin1 Gnd
Pin2 V (12v)
Pin3 Tach
Pin4 PWM
5V
Vcc
RX
TX
pH
Gnd
Atlas pH
U1
BN1
pH probe
5V
Vcc
IN0
IN1
IN2
IN3
IN4
IN5
IN6
IN7
JD-Vcc
GND
8ch rly 5v
U6
outlet1 relay
outlet2 relay
outlet3 relay
outlet4 relay
outlet5 relay
outlet6 relay
outlet7 relay
outlet8 relay
5V
Use a separate 5v supply and Gnd. Disconnect JD-Vcc to Vcc jumper. Install 130vac MOV across each outlet.
ULN2803A
IC1
12V
In 1
In 2
In 3
In 4
In 5
In 6
In 7
In 8
0V
Out 1
Out 2
Out 3
Out 4
Out 5
Out 6
Out 7
Out 8
COM
DB9 pin5
outlet16 relay DB9 pin4
outlet15 relay DB9 pin1
outlet14 relay DB9 pin2
outlet13 relay DB9 pin3
outlet12 relay DB9 pin9
outlet11 relay DB9 pin8
outlet10 relay DB9 pin7
outlet9 relay DB9 pin6
Optional additional 8 outlets
Use a 12v 1or2a switching power supply, stepped down to 5v with a buck converter to power the Arduino Mega board and the rest of external 5v circuits. Relay board is powered by a separate 5v 1a power supply. The 12v power supply is also used to power the Doser, PWM fan driver circuit and second unmodified Chauvet via ULN2803. You can add a power switch to the 110v line connected to the 110v inputs of the two power supplies.
Made with Fritzing.org