STANDARD

ANSI/ASHRAE Standard 140-2017
(Supersedes ANSI/ASHRAE Standard 140-2014)
Includes ANSI/ASHRAE Addendum listed in Annex C

Standard Method of Test for the Evaluation of Building Energy Analysis Computer Programs

See Informative Annex C for approval dates.

This Standard is under continuous maintenance by a Standing Standard Project Committee (SSPC) for which the Standards Committee has established a documented program for regular publication of addenda or revisions, including procedures for timely, documented, consensus action on requests for change to any part of the Standard. The change submittal form, instructions, and deadlines may be obtained in electronic form from the ASHRAE website (www.ashrae.org) or in paper form from the Senior Manager of Standards. The latest edition of an ASHRAE Standard may be purchased from the ASHRAE website (www.ashrae.org) or from ASHRAE Customer Service, 1791 Tullie Circle, NE, Atlanta, GA 30329-2305. E-mail: orders@ashrae.org. Fax: 678-539-2129. Telephone: 404-636-8400 (worldwide), or toll free 1-800-527-4723 (for orders in US and Canada). For reprint permission, go to www.ashrae.org/permissions.

© 2017 ASHRAE ISSN 1041-2336

Includes Web-based access to normative and informative electronic supplemental files.

Approved American National Standard
ANSI
www.ansi.org

Copyrighted material licensed to Sei Ito on 2020-06-26 for licensee's use only.
All rights reserved. No further reproduction or distribution is permitted. Distributed by Techstreet for ASHRAE, www.techstreet.com

Copyrighted material licensed to Sei Ito on 2020-06-26 for licensee's use only.
All rights reserved. No further reproduction or distribution is permitted. Distributed by Techstreet for ASHRAE, www.techstreet.com

ASHRAE Standing Standard Project Committee 140
Cognizant TC: 4.7, Energy Calculations
SPLS Liaison: Keith I. Emerson

Joel Neymark*, *Chair*
Drury B. Crawley*
Krishnan Gowri
Kamel Haddad
Tianzhen Hong*
Ronald D. Judkoff
David E. Knebel*
Neal J. Kruis
Michael Kummert
Timothy P. McDowell*
James F. Pegues*
Amir Roth*
Eric Sturm*
Michael J. Witte*
Da Yan*

** Denotes members of voting status when Standard 140-2014 Addendum a was approved for publication*

ASHRAE STANDARDS COMMITTEE 2017–2018

Steven J. Emmerich, *Chair*
Donald M. Brundage, *Vice-Chair*
Niels Bidstrup
Michael D. Corbat
Drury B. Crawley
Julie M. Ferguson
Michael W. Gallagher
Walter T. Grondzik
Vinod P. Gupta
Susanna S. Hanson
Roger L. Hedrick
Rick M. Heiden
Jonathan Humble
Srinivas Katipamula
Kwang Woo Kim
Larry Kouma
Arsen K. Melikov
R. Lee Millies, Jr.
Karl L. Peterman
Erick A. Phelps
David Robin
Peter Simmonds
Dennis A. Stanke
Wayne H. Stoppelmoor, Jr.
Richard T. Swierczyna
Jack H. Zarour
Lawrence C. Markel, *BOD ExO*
M. Ginger Scoggins, *CO*

Stephen C. Ferguson, *Senior Manager of Standards*

SPECIAL NOTE

This American National Standard (ANS) is a national voluntary consensus Standard developed under the auspices of ASHRAE. *Consensus* is defined by the American National Standards Institute (ANSI), of which ASHRAE is a member and which has approved this Standard as an ANS, as "substantial agreement reached by directly and materially affected interest categories. This signifies the concurrence of more than a simple majority, but not necessarily unanimity. Consensus requires that all views and objections be considered, and that an effort be made toward their resolution." Compliance with this Standard is voluntary until and unless a legal jurisdiction makes compliance mandatory through legislation.

ASHRAE obtains consensus through participation of its national and international members, associated societies, and public review.

ASHRAE Standards are prepared by a Project Committee appointed specifically for the purpose of writing the Standard. The Project Committee Chair and Vice-Chair must be members of ASHRAE; while other committee members may or may not be ASHRAE members, all must be technically qualified in the subject area of the Standard. Every effort is made to balance the concerned interests on all Project Committees.

The Senior Manager of Standards of ASHRAE should be contacted for

a. interpretation of the contents of this Standard,
b. participation in the next review of the Standard,
c. offering constructive criticism for improving the Standard, or
d. permission to reprint portions of the Standard.

DISCLAIMER

ASHRAE uses its best efforts to promulgate Standards and Guidelines for the benefit of the public in light of available information and accepted industry practices. However, ASHRAE does not guarantee, certify, or assure the safety or performance of any products, components, or systems tested, installed, or operated in accordance with ASHRAE's Standards or Guidelines or that any tests conducted under its Standards or Guidelines will be nonhazardous or free from risk.

ASHRAE INDUSTRIAL ADVERTISING POLICY ON STANDARDS

ASHRAE Standards and Guidelines are established to assist industry and the public by offering a uniform method of testing for rating purposes, by suggesting safe practices in designing and installing equipment, by providing proper definitions of this equipment, and by providing other information that may serve to guide the industry. The creation of ASHRAE Standards and Guidelines is determined by the need for them, and conformance to them is completely voluntary.

In referring to this Standard or Guideline and in marking of equipment and in advertising, no claim shall be made, either stated or implied, that the product has been approved by ASHRAE.

Copyrighted material licensed to Sei Ito on 2020-06-26 for licensee's use only.
All rights reserved. No further reproduction or distribution is permitted. Distributed by Techstreet for ASHRAE, www.techstreet.com

CONTENTS

ANSI/ASHRAE Standard 140-2017
Standard Method of Test for the Evaluation of Building Energy Analysis Computer Programs

SECTION **PAGE**

Foreword 4
1 Purpose 8
2 Scope 8
3 Definitions, Abbreviations, and Acronyms 8
3.1 Terms Defined for this Standard 8
3.2 Abbreviations and Acronyms Used in this Standard 13
4 Methods of Testing 16
4.1 General 16
4.2 Applicability of Test Method 16
4.3 Organization of Test Cases 16
4.4 Comparing Output to Other Results 19
5 Class I Test Procedures 20
5.1 Modeling Approach 20
5.2 Input Specifications for Building Thermal Envelope and Fabric Load Tests 21
5.2.1 Case 600: Base Case 21
5.2.2 Basic Tests 25
5.2.3 In-Depth Tests 30
5.2.4 Ground-Coupled Slab-on-Grade Analytical Verification Tests 35
5.3 Input Specification for Space-Cooling Equipment Performance Tests 46
5.3.1 Case CE100: Base-Case Building and Mechanical System for Analytical Verification Tests 46
5.3.2 Space-Cooling Equipment Performance Parameter Variation Analytical Verification Tests 59
5.3.3 Case CE300: Comparative Test Base-Case Building and Mechanical System 61
5.3.4 Space-Cooling Equipment Performance Comparative Tests 75
5.4 Input Specification for Space-Heating Equipment Performance Tests 82
5.4.1 Case HE100: Base-Case Building and Mechanical Systems 82
5.4.2 Space-Heating Equipment Performance Analytical Verification Tests 85
5.4.3 Space-Heating Equipment Performance Comparative Tests 86
5.5 Input Specification for Air-Side HVAC Equipment Analytical Verification Tests 87
5.5.1 Four-Pipe Fan-Coil (FC) System Cases (AE100 Series) 87
5.5.2 Single-Zone (SZ) Air System Cases (AE200 Series) 94
5.5.3 Constant-Volume (CV) Terminal Reheat System Cases (AE300 Series) 102
5.5.4 Variable-Air-Volume Terminal Reheat (VAV) System Cases (AE400 Series) 112
6 Class I Output Requirements 122
6.1 Reporting Results 122
6.2 Output Requirements for Building Thermal Envelope and Fabric Load and Ground-Coupled Slab-on-Grade Tests of Section 5.2 122

CONTENTS *(Continued)*

SECTION **PAGE**

6.3 Output Requirements for Space-Cooling Equipment Performance Tests of Section 5.3 125
6.4 Output Requirements for Space-Heating Equipment Performance Tests of Section 5.4 127
6.5 Output Requirements for Air-Side HVAC Equipment Performance Tests of Section 5.5 127
7 Class II Test Procedures 130
7.1 Modeling Approach 130
7.2 Input Specifications 130
7.2.1 The Base-Case Building (Case L100A) 130
7.2.2 Tier 1 Test Cases 133
7.2.3 Tier 2 Test Cases 137
8 Class II Output Requirements 205
8.1 Reporting Results 205
8.2 Output Requirements for Building Thermal Envelope and Fabric Load Tests of Section 7.2 205

Normative Annexes

Annex A1 Weather Data 207
Annex A2 Standard Output Reports 227

Informative Annexes

Annex B1 Tabular Summary of Test Cases 232
Annex B2 About Typical Meteorological Year (TMY) Weather Data 246
Annex B3 Infiltration and Fan Adjustments for Altitude 247
Annex B4 Exterior Combined Radiative and Convective Surface Coefficients 249
Annex B5 Infrared Portion of Film Coefficients 250
Annex B6 Incident-Angle-Dependent Window Optical Property Calculations 252
Annex B7 Detailed Calculation of Solar Fractions 255
Annex B8 Example Results for Building Thermal Envelope and Fabric Load and Ground-Coupled Slab-on-Grade Tests of Section 5.2 260
Annex B9 Diagnosing the Results Using the Flow Diagrams 268
Annex B10 Instructions for Working with Results Spreadsheets Provided with the Standard 278
Annex B11 Production of Example Results for Building Thermal Envelope and Fabric Load and Ground-Coupled Slab-on-Grade Tests of Section 5.2 285
Annex B12 Temperature Bin Conversion Program 290
Annex B13 COP Degradation Factor (CDF) as a Function of Part-Load Ratio (PLR) 291
Annex B14 Cooling-Coil Bypass Factor 294
Annex B15 Indoor Fan Data Equivalence 297
Annex B16 Analytical and Quasi-Analytical Solution Results and Example Simulation Results for HVAC Equipment Performance Tests of Sections 5.3, 5.4, and 5.5 298
Annex B17 Production of Analytical and Quasi-Analytical Solution Results and Example Simulation Results for HVAC Equipment Performance Tests of Sections 5.3, 5.4, and 5.5 311
Annex B18 Alternative Section 7 Ground Coupling Analysis Case Descriptions for Developing Additional Example Results for Cases L302B, L304B, L322B, and L324B 324

Copyrighted material licensed to Sei Ito on 2020-06-26 for licensee's use only.
All rights reserved. No further reproduction or distribution is permitted. Distributed by Techstreet for ASHRAE, www.techstreet.com

CONTENTS *(Continued)*

SECTION		PAGE
Annex B19	Distribution of Solar Radiation in the Section 7 Passive Solar Base Case (P100A)	328
Annex B20	Example Results for Section 7 Test Procedures	330
Annex B21	Production of Example Results for Section 7 Test Procedures	334
Annex B22	Example Procedures for Developing Acceptance-Range Criteria for Section 7 Test Cases	335
Annex B23	Validation Methodologies and Other Research Relevant to Standard 140	338
Annex B24	Informative References	345
Annex C	Addenda Description Information	350

Online Supporting Files: **http://www.ashrae.org/140-2017**

NOTE

Approved addenda, errata, or interpretations for this standard can be downloaded free of charge from the ASHRAE Web site at www.ashrae.org/technology.

© 2017 ASHRAE

1791 Tullie Circle NE · Atlanta, GA 30329 · www.ashrae.org · All rights reserved.

ASHRAE is a registered trademark of the American Society of Heating, Refrigerating and Air-Conditioning Engineers, Inc.
ANSI is a registered trademark of the American National Standards Institute.

Copyrighted material licensed to Sei Ito on 2020-06-26 for licensee's use only.
All rights reserved. No further reproduction or distribution is permitted. Distributed by Techstreet for ASHRAE, www.techstreet.com

(This foreword is not part of the standard. It is merely informative and does not contain requirements necessary for conformance to the standard. It has not been processed according to the ANSI requirements for a standard and may contain material that has not been subject to public review or a consensus process. Unresolved objectors on informative material are not offered the right to appeal at ASHRAE or ANSI.)

FOREWORD

This standard method of test (SMOT) was developed to identify and diagnose differences in predictions from whole-building energy simulation software that may be caused by algorithmic differences, modeling limitations, faulty coding, inadequate documentation, or input errors. These tests are part of an overall validation methodology described in Informative Annex B23. The procedures test software over a broad range of parametric interactions and for a number of different output types, thus minimizing the concealment of algorithmic differences by compensating errors. Different building energy simulation programs, representing different degrees of modeling complexity, can be tested. However, some of the tests may be incompatible with some building energy simulation programs.

The tests are a subset of all the possible tests that could occur. A large amount of effort has gone into establishing a sequence of tests that examines many of the physical and mathematical models relevant to simulating the energy performance of a building and its mechanical equipment. However, because building energy simulation software operates in an immense parameter space, it is not practical to test every combination of parameters over every possible range of function.

The tests consist of a series of carefully described test case building plan, material, and mechanical equipment specifications. Output values for the cases are compared and used in conjunction with diagnostic logic to determine the sources of predictive differences.

The test cases are divided into separate test classes to satisfy different levels of software modeling detail. Such classification allows more convenient citation of specific sections of Standard 140 by other codes and standards and by certifying and accrediting agencies. The Class I test cases (Section 5) are detailed diagnostic tests intended for simulation software capable of hourly or subhourly simulation time steps. The Class II test cases (Section 7) may be used for all types of building load calculation methods, regardless of time-step granularity, and are often favored by those needing to test simplified software for residential buildings. The Class I (Section 5) test cases are designed for more detailed diagnosis of simulation models than the Class II (Section 7) test cases. An overview of the test suites and methodologies that make up Standard 140 follows; Section 4 of the standard provides a detailed road map of the test specifications of Sections 5 and 7, and output requirements of Sections 6 and 8.

Class I Test Procedures (Section 5)

The set of Class I tests included herein consist of

a. software-to-software comparative tests, in which a program's results may be compared to itself or to the results of other programs in a consistent and repeatable manner, and

b. analytical verification tests, in which a program's results may be compared to the results from analytical, quasi-analytical, or verified numerical model solutions (this terminology is elaborated in a subsection below).

In addition to comparative and analytical verification tests, the overall methodology for model validation and testing described in Informative Annex B23, in the 2017 ASHRAE Handbook—Fundamentals *(see Chapter 19, Section 8), and elsewhere (as cited in Annex B23, Section B23.1.1) includes empirical validation testing, where tested software models are validated to within the uncertainty of experimental input and output data. Such tests can be accommodated within the current title purpose and scope of Standard 140, and additional research on this topic is recommended, as discussed in Informative Annex B23.*

Of the current set of Class I test cases, four test suites were initially developed by the National Renewable Energy Laboratory (NREL) with the International Energy Agency (IEA); one test suite was developed by Natural Resources Canada, also in collaboration with the IEA; and one test suite was based on ASHRAE research and adapted by NREL in collaboration with the ASHRAE Standard 140 project committee (SSPC 140). (See Annex B23, Section B23.1 for reference citations).

For the building thermal envelope and fabric load test cases of Section 5.2, the basic comparative test cases (Sections 5.2.1 and 5.2.2) test the ability of the programs to model such combined effects as thermal mass, direct solar gain windows, window-shading devices, internally generated heat, infiltration, sunspaces, and deadband and setback thermostat control. The in-depth comparative test cases (Section 5.2.3) facilitate diagnosis by allowing excitation of specific heat transfer mechanisms. The ground-coupled slab analytical verification tests of Section 5.2.4 use the results of an analytical solution as a primary mathematical truth standard, and the results from a set of detailed verified numerical models for three-dimensional ground-coupled heat transfer as a secondary mathematical truth standard. These results are then used for comparing to the results of models typically embedded within whole-building energy simulation software. (See Informative Annex B23 for a more complete description of using verified numerical models as a secondary truth standard.) Parametric variations from a steady-state base case include harmonically varying ground surface temperature, floor slab aspect ratio, slab area, water table depth (depth of constant ground temperature), slab interior and ground exterior-surface heat transfer coefficients, and slab and ground thermal conductivity. Informative analytical solution and verified numerical model results are provided for the test cases of this section.

The space-cooling equipment cases of Section 5.3 test the ability of programs to model the performance of unitary space-cooling equipment using manufacturer design data presented as empirically derived performance maps. Many whole-building energy simulation programs are designed to work with this type of data, and there is very little manufacturer's data that would support the alternative of first principles (direct physical system component) modeling. In the steady-state analytical verification cases of Sections 5.3.1

Copyrighted material licensed to Sei Ito on 2020-06-26 for licensee's use only. All rights reserved. No further reproduction or distribution is permitted. Distributed by Techstreet for ASHRAE, www.techstreet.com

and 5.3.2, which utilize a typical range of performance data, the following parameters are varied: sensible internal gains, latent internal gains, zone thermostat set point (entering dry-bulb temperature), and outdoor dry-bulb temperature. Parametric variations isolate the effects of the parameters singly and in various combinations and isolate the influence of part-loading of equipment, varying sensible heat ratio, dry-coil (no latent load) versus wet-coil (with dehumidification) operation, and operation at typical Air-Conditioning, Heating, and Refrigeration Institute (AHRI) rating conditions. Informative quasi-analytical solution results are provided for the test cases of this section. The comparative test cases of Sections 5.3.3 and 5.3.4 utilize an expanded range of performance data, an outdoor air mixing system, and hourly varying weather data and internal gains. These cases cannot be solved analytically but are more realistic. In these cases, the following parameters are varied: sensible internal gains, latent internal gains, infiltration rate, outdoor air fraction, thermostat set points, and economizer control settings. Through analysis of results, the influence of part-loading of equipment, outdoor dry-bulb (ODB) temperature sensitivity, and dry-coil (no latent load) versus wet-coil (with dehumidification) operation can also be isolated. These cases help to scale the significance of simulation results disagreements more so than the steady-state cases.

The space-heating equipment cases of Section 5.4 test the ability of programs to model the performance of residential fuel-fired furnaces. These tests are divided into two tiers. The Tier 1 analytical verification test cases (Sections 5.4.1 and 5.4.2) employ simplified boundary conditions and test the basic functionality of furnace models. More realistic boundary conditions are used in the Tier 2 comparative test cases (Section 5.4.3), where specific aspects of furnace models are examined. The full set of space-heating test cases is designed to test the implementation of specific algorithms for modeling the following aspects of furnace performance: furnace steady-state efficiency, furnace part-load ratio, furnace fuel consumption, circulating fan operation, and draft fan operation. These cases also test the effects of thermostat setback and undersized capacity. Informative analytical and quasi-analytical solution results are provided for the Tier 1 test cases of this section.

The air-side heating, ventilating, and air-conditioning (HVAC) equipment cases of Section 5.5 test the ability of programs to model fundamental air distribution system mass flow and heat balance. These test cases are complementary to the test cases of Sections 5.3 and 5.4, respectively, which test the ability to apply performance maps for modeling the working heat-transfer-fluid side and combustion side of HVAC equipment as described above. The Section 5.5 test cases are based on ASHRAE research project RP-865 and were adapted by NREL in collaboration with SSPC 140. These are steady-state analytical verification tests at a variety of constant zone and ambient conditions. The test systems include the following in order of increasing complexity: four-pipe fan coil (FC), single-zone air conditioner (SZ), constant-volume terminal reheat (CV), and variable-air-volume terminal reheat (VAV). In these cases, the FC system is a single-zone system with heating and cooling coils, zone air exhaust, and limited outdoor air (no economizer control), and it does not include a return air fan. The SZ system adds an economizer and a return air fan. The CV system further applies multiple (two) zones, system supply-air temperature control, and terminal reheat coils. Finally, the VAV system further applies a variable airflow supply fan and terminal zone supply-air dampers. The test cases are conducted at five different sets of steady-state outdoor and zone conditions in heating, dry-coil cooling, and wet-coil cooling modes and with temperature and enthalpy economizer outdoor air control strategies applied to selected conditions. Informative quasi-analytical solution results are provided.

Class II Test Procedures (Section 7)

The Class II (Section 7) test cases were adapted from HERS BESTEST, developed by the National Renewable Energy Laboratory (as cited in Annex B23, Section B23.1). This set of test cases formally codifies the Tier 1 and Tier 2 tests for certification of residential energy performance analysis tools.

The Section 7 test cases are divided into Tier 1 and Tier 2 tests. The Tier 1 base building plan (Section 7.2.1) is a single-story house with 1539 ft^2 of floor area, with one conditioned zone (the main floor), an unconditioned attic, a raised floor exposed to air (highly vented crawlspace), and typical glazing and insulation. Additional Tier 1 cases (Section 7.2.2) test the ability of software to model building envelope loads in the base-case configuration with the following variations: infiltration; wall and ceiling R-values; glazing physical properties, area, and orientation; shading by a south overhang; internal loads; exterior surface color; energy inefficient building; raised floor exposed to air; uninsulated and insulated slabs-on-grade; and uninsulated and insulated basements. The Tier 2 tests (Section 7.2.3) consist of the following additional elements related to passive solar design: variation in mass, glazing orientation, east and west shading, glazing area, and south overhang. The Section 7 test cases were developed in a more realistic residential context and have a more complex base building construction than the Section 5 test cases (which have more idealized and simplified construction for enhancement of diagnostic capability). To help avoid user input errors for the Section 7 test cases, the input for the test cases is simple, while remaining as close as possible to typical residential constructions and thermal and physical properties. Typical building descriptions and physical properties published by sources such as the National Association of Home Builders, the U.S. Department of Energy, ASHRAE, and the National Fenestration Rating Council are used for the Section 7 test cases.

Comparing Tested Results

The tests have a variety of uses, including

a. comparing the predictions from other building energy programs to the example results provided in Informative Annexes B8 and B16 for Class I tests, Informative Annex B20 for Class II tests, and/or to other results that were generated using this SMOT;

Copyrighted material licensed to Sei Ito on 2020-06-26 for licensee's use only. All rights reserved. No further reproduction or distribution is permitted. Distributed by Techstreet for ASHRAE, www.techstreet.com

b. checking a program against a previous version of itself after internal code modifications to ensure that only the intended changes actually resulted;

c. checking a program against itself after a single algorithmic change to understand the sensitivity between algorithms; and

d. diagnosing the algorithmic sources and other sources of prediction differences. (Diagnostic logic flow diagrams are included in Informative Annex B9.)

Regarding the example simulation results provided for the comparative test results of selected parts of Annex B8, selected parts of Annex B16, and Annex B20, the building energy simulation computer programs used to generate these results have been subjected to a number of analytical verification, empirical validation, and comparative testing studies. However, there is no such thing as a completely validated building energy simulation computer program. All building models are simplifications of reality. The philosophy here is to generate a range of results from several programs that are generally accepted as representing the state of the art in whole-building energy simulation programs. To the extent possible, input errors or differences have been eliminated from the presented results. Thus, for a given case, the range of differences between comparative test results presented in Informative Annexes B8, B16, and B20 represents legitimate algorithmic differences among these computer programs. For any given case, a tested program may fall outside this range without necessarily being incorrect. However, it is worthwhile to investigate the sources of substantial differences, as the collective experience of the authors of this standard is that such differences often indicate problems with the software or its usage, including, but not limited to

a. user input error, where the user misinterpreted or incorrectly entered one or more program inputs;

b. inadequate or faulty documentation;

c. a problem with a particular algorithm in the program; or

d. one or more program algorithms used outside their intended range.

Also, for any given case, a program that yields values in the middle of the range established by the comparative test example results should not be perceived as better or worse than a program that yields values at the borders of the range.

Informative (nonmandatory) Annex B22 provides an example procedure for establishing acceptance range criteria to assess annual or seasonal heating and cooling load results for software undergoing the Class II tests contained in Section 7. Inclusion of this example is intended to be illustrative only and does not imply in any way that results from software tests are required by Standard 140 to be within any specific limits. However, certifying or accrediting agencies using Section 7 may wish to adopt procedures for developing acceptance range criteria for tested software. Informative Annex B22 presents an example statistically based range setting methodology that may be useful for these purposes.

Importance of Analytical Solutions, Quasi-Analytical Solutions, and Verified Numerical Model Results

In general, it is difficult to develop analytical verification test cases, but such cases are extremely useful. Under the classification of "analytical verification," we define three types of test case solutions: "analytical solutions," "quasi-analytical solutions," and "verified numerical models." Analytical solutions represent a "mathematical truth standard," while quasi-analytical solutions and verified numerical models represent "secondary mathematical truth standards" (as described in Informative Annex B23, Section B23.1.1.2). For selected Class I test cases, Informative Annexes B16 and B8 provide analytical verification test results based on the above solution types, along with simulation results.

For analytical solutions, given the underlying simplified physical assumptions in the case definitions, there is a mathematically correct solution for each case. For quasi-analytical solutions, the assumptions can be somewhat more realistic; however, there is also the possibility for human interpretation to yield solutions that are slightly different but with a much smaller range of disagreement than results from different simulation programs. Verified numerical models allow even more realistic assumptions and cases but must be subjected to a rigorous screening procedure to minimize the possibility of errors. Verified numerical models are first compared to all available analytical solutions and then compared to each other for cases that do not have exact analytical solutions. Once verified, these numerical solutions can be used to test other models as implemented within whole-building energy simulation programs. The ground-coupled slab-on-grade heat transfer test cases of Section 5.2.4 utilize an analytical solution and verified numerical models to extend the analytical verification method beyond the constraints inherent in analytical solutions. All three types of analytical verification solutions provide a basis for greater diagnostic capability than the purely software-to-software comparative test method, and the verified numerical models allow more realistic boundary conditions to be used in the test cases than are possible with pure analytical solutions. See Informative Annex B23 for a more complete description of the analytical verification test methodology.

It is important to understand the difference between a "mathematical truth standard" and an "absolute truth standard." When applying mathematical truth standards, we only test the solution process for a model, not the appropriateness of the model itself; that is, we accept the given underlying physical assumptions while recognizing that these assumptions represent a simplification of physical reality. For example a one-dimensional conduction model may be properly solved mathematically, but inappropriate where two-dimensional conduction dominates. By contrast, an "approximate truth standard" from an experiment tests both the solution process and the appropriateness of the model within experimental uncertainty. The ultimate or "absolute" validation truth standard would be comparison of simulation results with data from a perfectly performed empirical validation experiment, with all simulation inputs perfectly defined.

We include simulation results for the cases where analytical verification results (analytical, quasi-analytical, or verified

Copyrighted material licensed to Sei Ito on 2020-06-26 for licensee's use only. All rights reserved. No further reproduction or distribution is permitted. Distributed by Techstreet for ASHRAE, www.techstreet.com

numerical model solutions) exist. This allows simulationists to compare their relative agreement (or disagreement) versus the analytical verification results to that for other simulation results. Perfect agreement among simulations and analytical verification results is not necessarily expected because sometimes simulations cannot perfectly match the specified simplifying assumptions or boundary conditions required for developing the analytical verification solutions. The provided results give an indication of the degree of agreement that is possible between simulation results and the analytical verification results. Therefore, a tested program may disagree with analytical verification solutions without necessarily being incorrect. However, it is worthwhile to investigate the sources of such differences, as noted previously.

Supporting Files

The supporting electronic files to be used with Standard 140-2017 are called out as described in README-140-2017.docx, provided in the root folder of the accompanying files package. Accompanying files are organized by a separate file folder for each set of tests. Each of the test-set-specific file folders is further subdivided by separate subfolders for normative files and informative files. Normative files include weather data, output report templates, and equipment performance data (for those test cases that apply such data). Informative files include example results, example entries for documentation reports, and other supporting information. ***Electronic files can be downloaded online at http://www.ashrae.org/140-2017****.*

Copyrighted material licensed to Sei Ito on 2020-06-26 for licensee's use only.
All rights reserved. No further reproduction or distribution is permitted. Distributed by Techstreet for ASHRAE, www.techstreet.com

1. PURPOSE

This standard specifies test procedures for evaluating the technical capabilities and ranges of applicability of computer programs that calculate the thermal performance of buildings and their HVAC systems.

2. SCOPE

These standard test procedures apply to building energy computer programs that calculate the thermal performance of a building and its mechanical systems. While these standard test procedures cannot test all algorithms within a building energy computer program, they can be used to indicate major flaws or limitations in capabilities.

3. DEFINITIONS, ABBREVIATIONS, AND ACRONYMS

3.1 Terms Defined for This Standard

adiabatic: without loss or gain of heat. ***Informative Note:*** For example, an adiabatic boundary does not allow heat to flow through it.

adjusted net sensible capacity: the gross sensible capacity less the actual fan power. (See *gross sensible capacity*.)

adjusted net total capacity: the gross total capacity less the actual fan power. (See *gross total capacity*.)

altitude: vertical elevation above sea level.

analytical solution: a mathematical solution of a model of reality that has an exact result for a given set of parameters and simplifying assumptions.

analytical verification: where outputs from a program, subroutine, algorithm, or software object are compared to results from a known analytical solution or to results from a set of closely agreeing quasi-analytical solutions or verified numerical models. (See *analytical solution*, *quasi-analytical solution*, and *verified numerical model*.)

annual heating load: the heating load for the entire one-year simulation period. ***Informative Note:*** For example, for hourly simulation programs, this is the sum of the hourly heating loads for the one-year simulation period.

annual hourly integrated maximum zone air temperature: the hourly zone temperature that represents the maximum for the one-year simulation period.

annual hourly integrated minimum zone air temperature: the hourly zone temperature that represents the minimum for the one-year simulation period.

annual hourly integrated peak floor conduction: the hourly floor conduction that represents the maximum for the final year of the simulation period; used for tests of Section 5.2.4.

annual hourly integrated peak heating load: the hourly heating load that represents the maximum for the one-year simulation period.

annual hourly integrated peak sensible cooling load: the hourly sensible cooling load that represents the maximum for the one-year simulation period.

annual hourly integrated peak zone load: the hourly zone load that represents the maximum for the final year of the simulation period; used for tests of Section 5.2.4.

annual hourly 1°C zone air temperature bin frequency: the number of hours that the zone air temperature has values within a given bin (1°C bin width) for the one-year simulation period.

annual incident unshaded total solar radiation (diffuse and direct): the sum of direct solar radiation and diffuse solar radiation that strikes a given surface for the entire one-year simulation period when no shading is present. ***Informative Note:*** For example, for hourly simulation programs, this is the sum of the hourly total incident solar radiation for the one-year simulation period.

annual mean zone air temperature: the average zone air temperature for the one-year simulation period. ***Informative Note:*** For example, for hourly simulation programs, this is the average of the hourly zone air temperatures for the one-year simulation period.

annual sensible cooling load: the sensible cooling load for the entire one-year simulation period. ***Informative Note:*** For example, for hourly simulation programs, this is the sum of the hourly sensible cooling loads for the one-year simulation period.

annual transmitted solar radiation (diffuse and direct): the sum of direct solar radiation and diffuse solar radiation that passes through a given window for the entire one-year simulation period. This quantity does not include radiation that is absorbed in the glass and conducted inward as heat. ***Informative Note:*** This quantity may be taken as the optically transmitted solar radiation through a window that is backed by a perfectly absorbing black cavity.

apparatus dew point (ADP): the effective coil surface temperature when there is dehumidification. On the psychrometric chart, this is the intersection of the condition line and the saturation curve, where the condition line is the line going through entering air conditions with slope defined by the sensible heat ratio (SHR) (ratio of sensible heat transfer to total [sensible + latent] heat transfer for a process). For the test cases of Section 5.3, SHR is calculated as SHR = (Gross sensible capacity)/(Gross total capacity). (See *sensible heat ratio*, *gross sensible capacity*, and *gross total capacity*.) ***Informative Note:*** The ADP is the temperature to which all the supply air would be cooled if 100% of the supply air contacted the coil.

aspect ratio (AR): the ratio of the floor slab length to the floor slab width.

building thermal envelope and fabric: elements of a building that enclose spaces and that control or regulate heat and mass transfer between the interior spaces and the building exterior, the internal thermal capacitance, and heat and mass transfer between internal zones.

bypass factor (BF): the percentage of the distribution air that does not come into contact with the cooling coil; the remaining air is assumed to exit the coil at the average coil temperature (apparatus dew point). (See *apparatus dew point*.)

cavity albedo: see *solar lost through window*.

Copyrighted material licensed to Sei Ito on 2020-06-26 for licensee's use only.
All rights reserved. No further reproduction or distribution is permitted. Distributed by Techstreet for ASHRAE, www.techstreet.com

coefficient of performance (COP): for a cooling (refrigeration) system, the ratio, using the same units in the numerator as in the denominator, of the net refrigeration effect to the corresponding energy input. For the purpose of calculating COP, corresponding energy input is the related cooling energy consumption, except for Cases CE300 through CE440 (see Sections 5.3.3, 5.3.4.1, and 5.3.4.2) where the indoor air distribution fan energy is included only during times when heat is being extracted by the evaporator coil. (See *net refrigeration effect* and *cooling energy consumption*.)

combined radiative and convective surface coefficient: a constant of proportionality relating the rate of combined convective and radiative heat transfer at a surface to the temperature difference across the air film on that surface.

combined surface coefficient: see *combined radiative and convective surface coefficient*.

conductance: thermal conductance.

convective surface coefficient: a constant of proportionality relating the rate of convective heat transfer at a surface to the temperature difference across the air film on that surface.

convergence tolerance: for an iterative solution process, the maximum acceptable magnitude of a selected error estimate; when the error criterion is satisfied, the process is deemed to have converged on a sufficiently accurate approximate solution.

cooling-coil latent load: the rate of heat extraction required to condense the moisture in cooling-coil entering air that becomes condensate. ***Informative Note:*** For an example, see the 2012 *ASHRAE Handbook—HVAC Systems and Equipment* [B-1], Chapter 23, Equation 38.

cooling-coil sensible load: the sum of the rate of heat extraction required to

a. cool the leaving moist air mass from the cooling-coil entering air temperature to the cooling-coil leaving air temperature,
b. cool any to-be-condensed vapor from the cooling-coil entering air temperature to the condensation temperature, and
c. cool any condensate from the condensation temperature to the leaving condensate temperature.

Informative Note: For examples, see the 2012 *ASHRAE Handbook—HVAC Systems and Equipment* [B-1], Chapter 23, Equations 39 and 39a.

cooling-coil total load: the sum of cooling-coil sensible load and cooling-coil latent load. ***Informative Note:*** For examples, see the 2012 *ASHRAE Handbook—HVAC Systems and Equipment* [B-1], Chapter 23, Equations 36 and 37.

cooling energy consumption: the site electric energy consumption of the mechanical cooling equipment, including the compressor, air distribution fan (regardless of whether the compressor is ON or OFF), condenser fan, and related auxiliaries.

COP2: the ratio, using the same units, of the gross total evaporator coil load to the sum of the compressor and outdoor condenser fan energy consumptions. (See *gross total evaporator coil load*.)

COP_{SEER}: the seasonal energy efficiency ratio (dimensionless).

COP degradation factor (CDF): a multiplier (≤1) applied to the full-load system COP or COP2. CDF is a function of part-load ratio. (See *part-load ratio for cooling*.)

deep ground temperature: the ground temperature at or below a soil depth of 2 m (6.56 ft), except for Section 5.2.4 ground coupling tests where the ground boundary depth varies as specified in the test cases.

degradation coefficient: a measure of efficiency loss due to cycling of equipment.

design nominal zone supply airflow rate: the maximum zone supply volumetric airflow rate using air conditions at the supply fan inlet. ***Informative Note:*** The actual design zone supply air volumetric flow varies as supply fan heat and terminal reheat increase the specific volume of the air away from the supply fan inlet.

design system return airflow rate: the volumetric return airflow rate calculated from the design system supply airflow rate minus the total zone exhaust airflow rates for the defined zones). This is the volumetric airflow rate at which the return fan pressure rise is specified. ***Informative Note:*** The actual return fan volumetric flow varies with the return air mass flow and the specific volume of the air entering the return fan.

design system supply airflow rate: the maximum system supply volumetric airflow rate at the supply fan inlet. This is the volumetric airflow rate at which the supply fan pressure rise is specified for the VAV system. ***Informative Note:*** In a VAV system, the supply fan volumetric flow varies to meet the zone terminal airflow requirements.

detailed ground heat transfer model: employs transient three-dimensional (3D) numerical-methods (finite-element or finite-difference) heat transfer modeling throughout the modeled domain.

dew-point temperature: temperature at which water vapor has reached the saturation point (100% relative humidity; see *relative humidity*); temperature of the air at which it must be cooled at constant barometric pressure for water vapor to condense.

diffuse solar radiation: the solar radiation received from the sun after its direction has been changed by scattering by the atmosphere or other objects such as the ground.

direct solar radiation: the solar radiation received from the sun without having been scattered by the atmosphere or other objects such as the ground; this is also called "beam" or "direct beam" radiation.

economizer: a control system that conserves energy; for Standard 140, this is a control system designed to conserve cooling energy by increasing outdoor airflow above minimum ventilation requirements when control logic indicates that using more outdoor air will reduce or eliminate cooling-coil loads.

energy efficiency ratio (EER): the ratio of net refrigeration effect (in Btu per hour) to cooling energy consumption (in watts) so that EER is stated in units of (Btu/h)/W. (See *net refrigeration effect* and *cooling energy consumption*.)

Copyrighted material licensed to Sei Ito on 2020-06-26 for licensee's use only. All rights reserved. No further reproduction or distribution is permitted. Distributed by Techstreet for ASHRAE, www.techstreet.com

entering dry-bulb temperature (EDB): the temperature indicated by an ordinary thermometer for air entering the evaporator coil. ***Informative Note:*** For a draw-through fan configuration with no heat gains or losses in the ductwork and no outdoor air mixed with return air, EDB equals the indoor dry-bulb temperature. For a similar configuration but when outdoor air is mixed with return air, EDB equals the mixed-air dry-bulb temperature.

entering wet-bulb temperature (EWB): the temperature indicated by the wet-bulb portion of a psychrometer when exposed to air entering the evaporator coil. ***Informative Note:*** For a draw-through fan with no heat gains or losses in the ductwork and no outdoor air mixed with return air, this would also be the zone air wet-bulb temperature. For a similar configuration but when outdoor air is mixed with return air, EWB equals the mixed-air wet-bulb temperature. For mixtures of water vapor and dry air at atmospheric temperatures and pressures, the wet-bulb temperature is approximately equal to the adiabatic saturation temperature (temperature of the air after undergoing a theoretical adiabatic saturation process). The wet-bulb temperature given in psychrometric charts is really the adiabatic saturation temperature.

evaporator coil loads: the actual sensible heat and latent heat removed from the distribution air by the evaporator coil. ***Informative Note:*** These loads include indoor air distribution fan heat for times when the compressor is operating, and they are limited by the system capacity (where system capacity is a function of operating conditions). Sensible evaporator coil load applies only to sensible heat removal. Latent evaporator coil load applies only to latent heat removal. (See *sensible heat* and *latent heat*.)

exterior film: as used in Section 7, see *combined radiative and convective surface coefficient*.

extinction coefficient: the proportionality constant K in Bouguer's Law ([dI] = [I K dx]), where I is the local intensity of solar radiation within a medium, and x is the distance the radiation travels through the medium.

fan mechanical efficiency (fan total efficiency [η_t]):

$$\eta_t = H_o/H_i$$

where

H_o = $Q \times P_t \times K_p \times C$; this is the fan power output (causing airflow and pressure rise), W (hp), where

- Q = fan airflow rate, m^3/s (cfm).
- P_t = fan total pressure rise, Pa (in. of water); fan total pressure rise includes static pressure (from compression) and velocity pressure (from rate of motion).
- K_p = compressibility coefficient, dimensionless. ***Informative Note:*** For fan total pressure < 12 in. of water, K_p is usually greater than 0.99 and may be taken as unity [B-2].
- C = units conversion constant. ***Informative Note:*** For Système Internationale (SI) units, $C = 1$; for inch-pound (I-P) units, C may be taken as approximately 1/6343.3 per the literature [B-3].

H_i = fan power input, W (hp). This is also called "power input to impeller" or "shaft power input" and is the remaining mechanical power after subtracting fan motor and transmission drive power losses from the fan motor input power. (See *motor efficiency* and *transmission drive efficiency*). ***Informative Note:*** This parameter is designated as W_{sh} in Informative Annex B15.

Informative Note: Fan total efficiency and related terminology are further described in the literature [B-3,B-4].

film coefficient: see *combined radiative and convective surface coefficient*.

free float: a condition where mechanical heating and cooling equipment is OFF so that the space or zone temperature varies without constraint.

gross sensible capacity: the rate of sensible heat removal by the cooling coil for a given set of operating conditions. (See *sensible heat*.) ***Informative Note:*** This value varies as a function of performance parameters such as EWB, ODB, EDB, and airflow rate.

gross total capacity: the total rate of both sensible heat and latent heat removal by the cooling coil for a given set of operating conditions. (See *sensible heat* and *latent heat*.) ***Informative Note:*** This value varies as a function of performance parameters such as EWB, ODB, EDB, and airflow rate.

gross total coil load (or gross total evaporator coil load): the sum of the sensible heat and latent heat removed from the distribution air by the evaporator coil.

heating-coil load: the rate of heat addition required to heat the moist air mass entering the heating coil from the heating-coil entering air temperature to the heating-coil leaving air temperature.

heat input ratio (HIR): a ratio that is the inverse of the efficiency.

hemispherical infrared emittance: the average directional infrared emittance over a hemispherical envelope over the surface. (See *infrared emittance*.)

hourly free-floating zone air temperature: zone air temperature for a given hour during which heating and cooling equipment is OFF or for an unconditioned zone.

hourly heating load: the heating load for a given hour.

hourly incident unshaded solar radiation (direct and diffuse): the sum of direct solar radiation and diffuse solar radiation that strikes a given surface for a given hour.

hourly sensible cooling load: the sensible cooling load for a given hour.

humidity ratio: the ratio of the mass of water vapor to the mass of dry air in a moist air sample.

incidence angle: the angle defined by the intersection of a line normal to a surface and a ray that strikes that surface.

index of refraction: relates the angle of refraction (x_2) to the angle of incidence (x_1) at the surface interface of two media according to Snell's law ($n_1 \sin[x_1] = n_2 \sin[x_2]$), where n_1 and n_2 are indices of refraction for each medium.

Copyrighted material licensed to Sei Ito on 2020-06-26 for licensee's use only. All rights reserved. No further reproduction or distribution is permitted. Distributed by Techstreet for ASHRAE, www.techstreet.com

indoor dry-bulb temperature (IDB): the temperature indicated by an ordinary thermometer when exposed to indoor air.

infiltration: the leakage of air through any building element. ***Informative Note:*** For example, air leakage through walls, windows, and/or doors.

infrared emittance: the ratio of the infrared spectrum radiant flux emitted by a body to that emitted by a blackbody at the same temperature and under the same conditions.

interior film: as used in Section 7, see *combined radiative and convective surface coefficient*.

interior solar distribution: the fraction of transmitted solar radiation incident on specific surfaces in a room. (See *solar distribution fraction*.)

internal gains: the heat gains generated inside the space or zone.

latent heat: the change in enthalpy associated with a change in humidity ratio, caused by the addition or removal of moisture. (See *humidity ratio*.)

***mathematical truth standard*:** the standard of accuracy for predicting system behavior based on an analytical solution.

midlevel detailed ground heat transfer model: based on a transient two-dimensional (2D) or three-dimensional (3D) numerical-methods heat transfer model, applying some simplifications for adaptation to a whole-building energy simulation program; such models include correlation methods based on extensive 2D or 3D numerical analysis.

motor efficiency (η_m):

$$\eta_m = H_m/H_e$$

where

H_m = usable motor shaft output power, W (hp).

H_e = motor electric input power, W (hp). ***Informative Note:*** This parameter is designated as *W* in Informative Annex B15.

net refrigeration effect: the rate of heat removal (sensible + latent) by the evaporator coil, as regulated by the thermostat (not necessarily the full load capacity), after deducting internal and external heat transfers to air passing over the evaporator coil. ***Informative Note:*** For the tests of Section 5.3, the net refrigeration effect is the evaporator coil load less the actual air distribution fan heat for the time when the compressor is operating; at full load, this is also the adjusted net total capacity. (See *adjusted net total capacity*, *evaporator coil load*, *sensible heat*, and *latent heat*.)

net sensible capacity: the gross sensible capacity less the default rate of fan heat assumed by the manufacturer; this rate of fan heat is not necessarily the same as for the actual installed fan (see *adjusted net sensible capacity*). (Also see *gross sensible capacity*.)

net total capacity: the gross total capacity less the default rate of fan heat assumed by the manufacturer; this rate of fan heat is not necessarily the same as for the actual installed fan (see *adjusted net total capacity*). (Also see *gross total capacity*.)

nominal zone supply airflow rate: the zone supply volumetric airflow rate calculated using conditions of the air at the supply fan inlet. ***Informative Note:*** The actual zone supply air volumetric flow rate varies as supply fan heat and terminal reheat increase the specific volume of the air away from the supply fan inlet.

nonproportional-type thermostat: a thermostat that provides two-position (ON/OFF) control.

outdoor dry-bulb temperature (ODB): the temperature indicated by an ordinary thermometer when exposed to outdoor air. ***Informative Note:*** For the test cases of Section 5.3, this is the temperature of air entering the condenser coil.

part-load factor (PLF): the ratio of the efficiency at part load to the steady-state efficiency. ***Informative Note:*** PLF represents the degradation in efficiency due to part-load operation.

part-load ratio for cooling (PLR): the ratio of the net refrigeration effect to the adjusted net total capacity for the cooling coil. (See *net refrigeration effect* and *adjusted net total capacity*.) ***Informative Note:*** As shown in Informative Annex B13, for the purpose of calculating the COP degradation factor (CDF), defining PLR as the ratio of gross total evaporator coil load to the gross total capacity produces an equivalent CDF. (See *COP degradation factor*, *gross total evaporator coil load*, and *gross total capacity*.)

part-load ratio for furnace (PLR_f): the ratio of the net heating effect to the adjusted net total capacity for the furnace.

preheat-coil load: the rate of heat addition required to heat the moist air mass entering the preheat coil from the preheat-coil entering air temperature to the preheat-coil leaving air temperature.

quasi-analytical solution: the mathematical solution of a model for a given set of parameters and simplifying assumptions; such a solution is allowed to include minor interpretation differences that cause minor results variations. ***Informative Note:*** Such a solution may be computed by generally accepted numerical methods or other means, provided that such calculations occur outside the environment of a whole-building energy simulation program and can be scrutinized.

raised floor exposed to air: a floor system where the air temperature below the floor is assumed to equal the outside air temperature, the underside of the conditioned-zone floor has an exterior film coefficient consistent with a "rough" surface texture and zero wind speed, and the conditioned-zone floor exterior surface (surface facing the raised floor) receives no solar radiation. See Section 7.2.1.5.

reheat-coil load: for a given zone reheat coil, the rate of heat addition required to heat the given zone supply air moist air mass from the system supply air temperature to the zone supply air temperature for the given zone.

relative humidity: (a) the ratio of the mole fraction of water vapor in a given moist air sample to the mole fraction in an air sample that is saturated and at the same temperature and pressure or (b) the ratio of partial pressure of the water vapor in a sample to the saturation pressure at the same dry-bulb temperature and barometric pressure of the ambient air.

Copyrighted material licensed to Sei Ito on 2020-06-26 for licensee's use only. All rights reserved. No further reproduction or distribution is permitted. Distributed by Techstreet for ASHRAE, www.techstreet.com

seasonal energy efficiency ratio (SEER): the ratio of net refrigeration effect in Btu to the cooling energy consumption in watt-hours for a refrigerating device over its normal annual usage period. (See *net refrigeration effect* and *cooling energy consumption*.) ***Informative Note:*** This parameter is commonly used for simplified estimates of energy consumption based on a given load and is not generally useful for detailed simulations of mechanical systems. SEER is determined using ANSI/AHRI Standard 210/240-89[B-5].

secondary mathematical truth standard: the standard of accuracy for predicting system behavior based on the range of disagreement of a set of closely agreeing verified numerical models or other quasi-analytical solutions, to which other simulations are allowed to be compared. (See *verified numerical model* and *quasi-analytical solution*.)

sensible heat: the change in enthalpy associated with a change in dry-bulb temperature caused by the addition or removal of heat.

sensible heat ratio (SHR): the ratio of sensible heat transfer to total (sensible + latent) heat transfer for a process; alternatively known as "sensible heat factor" (SHF). (See *sensible heat* and *latent heat*.)

shortwave: refers to the solar spectrum. ***Informative Note:*** For example, in this standard the terms *solar absorptance* and *shortwave absorptance* are used interchangeably.

simplified ground heat transfer model: a model based on a one-dimensional (1D) dynamic or steady-state heat transfer model; implementation of such a model usually requires no modification to a whole-building energy simulation program.

solar absorptance: the ratio of the solar spectrum radiant flux absorbed by a body to that incident on it.

solar distribution fraction: the fraction of total solar radiation transmitted through windows that is absorbed by a given surface or retransmitted (lost) back out the windows.

solar fraction: see *solar distribution fraction*.

solar heat gain coefficient (SHGC): a dimensionless ratio of solar heat gains to incident solar radiation, including transmittance plus inward flowing fraction of absorbed solar radiation. ***Informative Note:*** For windows, SHGC is dependent on incidence angle.

solar lost: see *solar lost through window*.

solar lost through window: the fraction of total solar radiation transmitted through windows that is reflected by opaque surfaces and retransmitted back out the windows.

standard temperature and pressure (STP) conditions: 0°C and 1 atm.

surface coefficient: see c*ombined radiative and convective surface coefficient*.

system supply airflow rate: the volumetric airflow rate measured at the supply fan inlet. ***Informative Note:*** As the temperature and humidity ratio of the air entering the supply fan change, the specific volume of that air changes; this means that for a given supply volumetric airflow rate, the mass flow rate of supply air varies among the Section 5.5 test cases.

transmission drive efficiency (η_d):

$$\eta_d = H_i/H_m$$

where

H_i = fan power input, W (hp); see H_i under *fan mechanical efficiency*.

H_m = usable motor shaft output power, W (hp).

Informative Note: Fan motor shaft power is typically transferred to the fan impeller using belts or direct drive.

verified numerical model: a numerical model with solution accuracy verified by close agreement with an analytical solution and/or other quasi-analytical solution or numerical solutions, according to a process that demonstrates solution convergence in the space and time domains. (See *analytical solution* and *quasi-analytical solution*.) ***Informative Note:*** Such numerical models may be verified by applying an initial comparison with analytical solutions, followed by comparisons with other numerical models for incrementally more realistic cases where analytical solutions are not available.

zone air temperature: the temperature of just the zone air, not including infrared radiation from the interior surfaces. ***Informative Note:*** Such a temperature would be measured by a sensor housed in a well-aspirated containment shielded by a material with a solar and infrared reflectance of one; well-mixed air is assumed.

zone cooling loads: the sensible heat and latent heat loads associated with heat and moisture exchange between the building envelope and its surroundings as well as internal heat and moisture gains within the building. These loads do not include internal gains associated with operating the mechanical system. ***Informative Note:*** For example, these loads do not include air distribution fan heat.

zone exhaust airflow rate: the volumetric airflow rate measured at the inlet of a given zone's exhaust fan. ***Informative Note:*** As the temperature and humidity ratio of the air entering an exhaust fan change, the specific volume of that air changes; this means that for a given exhaust volumetric airflow rate, the mass flow rate of exhaust air from each zone varies among the Section 5.5 test cases.

zone latent load: for the test cases of Section 5.5, the rate of heat addition to vaporize the water added to the zone at a temperature of 0° in the units system used (SI or I-P), plus the energy required to heat that added vapor from 0° to the zone temperature. ***Informative Note:*** This definition may be expressed as shown in equation form (also see Part II, Section 2.2.1.8 of the originating test suite adaptation report[B-6]).

$$\text{Zone latent load} = [\text{Mass of moisture added to zone, kg/s (lb/h)}] \times [i_{0,water\ vapor} + Cp_{water\ vapor} \times T_{zone}]$$

where

$i_{0,water\ vapor}$ = specific enthalpy of water vapor at zero degrees, kJ/kg (Btu/lb)

$Cp_{water\ vapor}$ = specific heat of water vapor, kJ/(kg·K) (Btu/[lb·°F])

T_{zone} = zone air temperature, °C (°F)

Copyrighted material licensed to Sei Ito on 2020-06-26 for licensee's use only. All rights reserved. No further reproduction or distribution is permitted. Distributed by Techstreet for ASHRAE, www.techstreet.com

In the above equation, $[i_{0,water\ vapor} + Cp_{water\ vapor} \times T_{zone}]$ equals the enthalpy of water vapor i_g at the given zone temperature, based on ideal gas laws. This approximates the real-gas model values listed in the 2009 *ASHRAE Handbook—Fundamentals* [B-7], Chapter 1, Table 3.

zone sensible cooling load: for the test cases of Section 5.5, the rate at which sensible heat must be extracted from the zone to maintain the zone air temperature set point. ***Informative Note:*** This definition may be expressed as shown in equation form, based on ASHRAE RP-865 [B-8].

$$\text{Zone sensible cooling load} = [\text{Dry air mass flow rate, kg/s (lb/h)}] \times [(T_{zone} - T_{supply}) \times (Cp_{air} + Cp_{water\ vapor} \times W_{supply})]$$

where

T_{zone} = zone air temperature, °C (°F).

T_{supply} = zone supply air temperature, °C (°F); for the FC and SZ systems, this is the same as the system supply air temperature.

Cp_{air} = specific heat of dry air, kJ/(kg·K) (Btu/[lb·°F]).

$Cp_{water\ vapor}$ = specific heat of water vapor, kJ/(kg·K) (Btu/[lb·°F]).

W_{supply} = zone supply air humidity ratio (kg water vapor)/(kg dry air) ([lb water vapor]/[lb dry air]); for the FC and SZ systems, this is the same as the system supply air humidity ratio.

zone sensible heating load: for the test cases of Section 5.5, the rate at which sensible heat must be added to the zone to maintain the zone air temperature set point. ***Informative Note:*** This definition may be expressed as shown in equation form, based on ASHRAE RP-865[B-8].

$$\text{Zone sensible heating load} = [\text{Dry air mass flow rate, kg/s (lb/h)}] \times [(T_{supply} - T_{zone}) \times (Cp_{air} + Cp_{water\ vapor} \times W_{supply})]$$

where

T_{supply} = zone supply air temperature, °C (°F); for the FC and SZ systems, this is the same as the system supply air temperature.

T_{zone} = zone air temperature, °C (°F).

Cp_{air} = specific heat of dry air, kJ/(kg·K) (Btu/[lb·°F]).

$Cp_{water\ vapor}$ = specific heat of water vapor, kJ/(kg·K) (Btu/[lb·°F]).

W_{supply} = zone supply air humidity ratio (kg water vapor)/(kg dry air) ([lb water vapor]/[lb dry air]); for the FC and SZ systems, this is the same as the system supply air humidity ratio.

zone supply air mass flow fraction: the fraction of system supply air mass flow distributed to each zone.

3.2 Abbreviations and Acronyms Used in this Standard

α_{ext}	exterior solar absorptance
1D	one-dimensional
2D	two-dimensional
3D	three-dimensional
A	area
Abs.	absorptance
Abs. In	absorptance of inner pane
Abs. Out	absorptance of outer pane
ach	air changes per hour
ADP	apparatus dew point
AHRI	Air-Conditioning, Heating and Refrigeration Institute
AMCA	Air Movement and Control Association International, Inc.
ANSI	American National Standards Institute
Apr.	April
AR	aspect ratio
ARI	Air-Conditioning and Refrigeration Institute (now AHRI)
ASHRAE	American Society of Heating, Refrigerating and Air-Conditioning Engineers
B	floor slab length in north/south direction, m (ft)
Base	base case
BESTEST	Building Energy Simulation Test and Diagnostic Method
BF	bypass factor
BHP	brake horsepower
Cd	degradation coefficient
CDF	coefficient of performance degradation factor
cfm	cubic feet per minute
Coef.	coefficient
COG	center of glass
COP	coefficient of performance
COP2	alternative coefficient of performance (see Section 3.1)
c_p	specific heat, J/(kg·K) (Btu/[lb·°F])
CV	constant-volume terminal reheat system, see Section 5.5.3
D	door 3 ft. × 6 ft. 8 in.
DBT	dry-bulb temperature, °C
Dec.	December
Dir. Nor.	direct normal
DOE	United States Department of Energy
E	deep-ground depth (Section 5.2.4 only), m
EDB	entering dry-bulb temperature
EER	energy efficiency ratio
EOG	edge of glass
EWB	entering wet-bulb temperature
E,W,N,S	east, west, north, south
Ext.	exterior
F	far-field dimension, m (ft)

Copyrighted material licensed to Sei Ito on 2020-06-26 for licensee's use only. All rights reserved. No further reproduction or distribution is permitted. Distributed by Techstreet for ASHRAE, www.techstreet.com

FC	four-pipe fan-coil system, see Section 5.5.1
FF	free-floating thermostat control strategy (no heating or cooling)
h	convective surface coefficient, W/(m^2·K) (Btu/[h·ft^2·°F])
Heatcap	heat capacity
Hemis.	hemispherical
HERS	Home Energy Rating System
h,ext	exterior convective surface coefficient, W/(m^2·K) (Btu/[h·ft^2·°F])
High-mass	heavy mass
h,int	interior convective surface coefficient, W/(m^2·K) (Btu/[h·ft^2·°F])
HIR	heat input ratio
H_o	fan output power required to meet specified airflow requirements
HVAC	heating, ventilating, and air conditioning
HVAC BESTEST	International Energy Agency Building Energy Simulation Test and Diagnostic Method for Heating, Ventilating, and Air-Conditioning Equipment Models
I.D.	inside diameter
ID	indoor
IDB	indoor dry-bulb temperature
IEA	International Energy Agency
Int	interior
I-P	inch-pound
Jan.	January
k	thermal conductivity, W/(m·K) (Btu/[h·ft·°F])
k_{soil}	soil/slab thermal conductivity, W/(m·K) (Btu/[h·ft·°F])
L	floor slab length in east/west direction, m (ft)
LCR	load to collector area ratio
Low-E	low emissivity
Low mass	light mass
Mar.	March
N/A	not applicable
NAHB	National Association of Home Builders
NFRC	National Fenestration Rating Council
NOAA	National Oceanic and Atmospheric Administration
Nov.	November
NREL	National Renewable Energy Laboratory
NSRDB	National Solar Radiation Database
Num.	number
OAE	outdoor air enthalpy
O.C.	on centers
Oct.	October
O.D.	outside diameter
ODB	outdoor dry-bulb temperature
$ODB_{econo,min}$	the outdoor dry-bulb temperature where at the minimum required outdoor airflow rate Tzone = zone thermostat set point
ODP	outdoor dew-point temperature
PLF	part-load factor
PLR	part-load ratio for cooling
PLR_f	part-load ratio for furnace
PROP	property
q	heat flow, W or Wh/h
QAS	quasi-analytical solution
QC_{latent}	system cooling-coil latent load, kWh/h
$QC_{sensible}$	system cooling-coil sensible load, kWh/h
QC_{total}	system cooling-coil total load, $QC_{sensible} + QC_{latent}$, kWh/h
q_{floor}	floor conduction, W or Wh/h
Q_{floor}	annual total floor conduction, kWh/y
$q_{floor,max}$	annual hourly integrated peak floor conduction, W or Wh/h
q_{zone}	zone load, W or Wh/h
Q_{zone}	annual total zone load, kWh/y
$q_{zone,max}$	annual hourly integrated peak zone load, W or Wh/h
QH	system heating-coil load, kWh/h; used for single-zone (FC and SZ) system test cases
$QH1_{reheat}$	reheat-coil load: Zone 1, kWh/h
$QH2_{reheat}$	reheat-coil load: Zone 2, kWh/h
$QH_{preheat}$	system preheat-coil load, kWh/h
$QZ1_{latent}$	Zone 1 latent load, kWh/h
$QZ2_{latent}$	Zone 2 latent load, kWh/h
$QZC1_{sensible}$	Zone 1 sensible cooling load, kWh/h
$QZC2_{sensible}$	Zone 2 sensible cooling load, kWh/h
$QZC_{sensible}$	zone sensible cooling load, kWh/h; used for single-zone (FC and SZ) system test cases
$QZH1_{sensible}$	Zone 1 sensible heating load, kWh/h
$QZH2_{sensible}$	Zone 2 sensible heating load, kWh/h
$QZH_{sensible}$	zone sensible heating load, kWh/h; used for single-zone (FC and SZ) system test cases
QZ_{latent}	zone latent load, kWh/h; used for single-zone (FC and SZ) system test cases
R	unit thermal resistance, m^2·K/W (h·ft^2·°F/Btu)
RAE	return air enthalpy
RAT	return air temperature
Refl.	reflectance

Copyrighted material licensed to Sei Ito on 2020-06-26 for licensee's use only. All rights reserved. No further reproduction or distribution is permitted. Distributed by Techstreet for ASHRAE, www.techstreet.com

RH_{cco}	cooling-coil leaving air relative humidity, %
SAT	supply air temperature
SC	shading coefficient
SEER	seasonal energy efficiency ratio
SFEAT	supply fan entering air temperature
SGLA	net south glass area (excluding window frames)
SHC	gross sensible capacity, kW thermal
SHGC	solar heat gain coefficient
SHR	sensible heat ratio
SI	Système Internationale
SSPC 140	ASHRAE Standing Standard Project Committee responsible for ANSI/ASHRAE Standard 140, *Standard Method of Test for the Evaluation of Building Energy Analysis Computer Programs*
STP	standard temperature and pressure
Surf.	surface
SZ	single-zone system; see Section 5.5.2
t	thickness, m
T	zone air temperature
$T_{@surf,n}$	at-surface temperature, Case GC10a only, °C
TC	gross total capacity, kW thermal
T_{dg}	deep-ground temperature, °C (°F)
Temp.	temperature, °C (°F)
T_i	interior slab surface temperature, °C (°F)
$T_{i,a}$	zone air temperature, °C (°F)
TMY	Typical Meteorological Year
TMY2 or TM2	Typical Meteorological Year 2
T_o	exterior ground surface temperature, °C (°F)
$T_{o,a}$	ambient air temperature, °C (°F)
$T_{ODB,min}$	minimum hourly ambient temperature, °C
Trans.	solar transmittance
t_{sim}	number of hours simulated (hours)
T_{supply}	dry-bulb temperature of the zone supply air, °C
$T_{surf,n}$	near-surface temperature, °C
TUD	Technische Universität Dresden
T_{zone}	dry-bulb temperature of the zone air, °C
$T_{zone,mean}$	annual average zone air temperature, °C
U	unit thermal conductance or overall heat transfer coefficient, W/(m^2·K) (Btu/[h·ft^2·°F])
UA	thermal conductance, W/K
UA_{inf}	equivalent thermal conductance due to infiltration
UV	ultraviolet
v.	versus
Val.	value
VAV	variable-air-volume terminal reheat system, see Section 5.5.4
W	window, 3 × 5 ft
W	slab/soil perimeter boundary width or wall thickness, m (ft) (Section 5.2.4 only)
WBAN	Weather Bureau Army Navy
W_p	window 2 ft. 6 in. × 6 ft. 6 in.
W_{supply}	humidity ratio of the zone supply air, (kg vapor)/(kg dry air)
WYEC2	Weather Year for Energy Calculations 2
W_{zone}	humidity ratio of the zone air, (kg vapor)/(kg dry air)
x	variable dimension along x-axis, cm
y	variable dimension along y-axis, cm

3.3 Subscripts

cco	system location, cooling-coil outlet
hco	system location, heating-coil outlet
ma	system location, mixed air (recirculated and outdoor) before coils and supply fan
oa	system location, outdoor air inlet
pco	system location, preheating coil outlet
ra	system location, return air
rfi	system location, return fan inlet
rfo	system location, return fan outlet
sa	system location, supply fan outlet (system supply air to zones)
z1	Zone 1 air
z1s	system location, supply air to Zone 1 after terminal reheat-coil
z2	Zone 2 air
z2s	system location, supply air to Zone 2 after terminal reheat-coil

Copyrighted material licensed to Sei Ito on 2020-06-26 for licensee's use only. All rights reserved. No further reproduction or distribution is permitted. Distributed by Techstreet for ASHRAE, www.techstreet.com

4. METHODS OF TESTING

Informative Note: Sections 4.2, 4.3, and 4.4 and their subsections are informative material.

4.1 General. The test procedures shall be applied as specified in Normative Sections 5 through 8. Content of the normative sections and organization of the test procedures are described in Sections 4.1.1 and 4.1.2 below and in greater detail in Informative Section 4.3. Codes and standards that reference Standard 140 shall be permitted to call out specific sections within Standard 140 to specify individual test cases or groups of test cases.

4.1.1 Class I Test Cases. The Class I test cases are detailed diagnostic tests for simulation software capable of hourly or subhourly simulation time steps. The requirements for these test cases are specified in Section 5. Section 6 includes the output requirements for the Class I test cases, as specified in Section 5; Section 6 is placed apart from Section 5 for reasons of convenience.

4.1.2 Class II Test Cases. The Class II test cases are for all types of building load calculation methods regardless of time-step granularity. The requirements for these test cases are specified in Section 7. Section 8 includes the output requirements for the Class II test cases, as specified in Section 7; Section 8 is placed apart from Section 7 for reasons of convenience.

4.1.3 Normative Annexes. The normative annexes to this standard are considered to be integral parts of the mandatory requirements of this standard, which, for reasons of convenience, are placed apart from all other normative elements.

4.1.4 Informative Annexes. The informative annexes and informative notes located within this standard contain additional information and are not mandatory or part of this standard.

Informative Note: **The remainder of Section 4 is informative material that provides background on the fundamentals and structure of the standard. Users of this standard should review Sections 4.2 through 4.4 before proceeding with this method of test.**

4.2 Applicability of Test Method. The method of test is provided for analyzing and diagnosing building energy simulation software using software-to-software, software-to-analytical-solution, software-to-quasi-analytical-solution, and software-to-verified-numerical-model comparisons. The methodology allows different building energy simulation programs, representing different degrees of modeling complexity, to be tested by

- comparing the predictions from other building energy simulation programs to the Class I test example simulation and verified numerical model results provided in Informative Annex B8, to the Class I test example analytical and quasi-analytical solution and simulation results in Informative Annex B16, to the Class II test example simulation results provided in Informative Annex B20, and/or to other results (simulations, analytical and quasi-analytical solutions, or verified numerical model results) that were generated using this standard method of test;
- checking a program against a previous version of itself after internal code modifications to ensure that only the intended changes actually resulted;
- checking a program against itself after a single algorithmic change to understand the sensitivity between algorithms; and
- diagnosing the algorithmic sources and other sources of prediction differences (diagnostic logic flow diagrams are included in Informative Annex B9).

4.3 Organization of Test Cases. The specifications for determining test case configurations and input values are provided on a case-by-case basis in Section 5 and Section 7. The test cases are divided into two separate test classes to satisfy various levels of software modeling detail. Such classification allows more convenient citation of specific sections of Standard 140 by other codes and standards and by certifying and accrediting agencies, as appropriate. The Class I test cases (Section 5) are detailed diagnostic tests intended for simulation software capable of hourly or subhourly simulation time steps. The Class II test cases (Section 7) may be used for all types of building load calculation methods, regardless of time-step granularity. The Class I (Section 5) test cases are designed for more detailed diagnosis of simulation models than the Class II (Section 7) test cases.

Weather information required for use with the test cases is provided as described in Normative Annex A1. Informative Annex B1 provides an overview for all the test cases and contains information on those building parameters that change from case to case; Annex B1 is recommended for preliminary review of the tests, but do not use it for defining the cases. Additional information regarding the meaning of the cases is shown in Informative Annex B9 on diagnostic logic. In some instances (e.g., Case 620, Section 5.2.2.1.2), a case developed from modifications to a given base case (e.g., Case 600 in Section 5.2.1) will also serve as the base case for other cases. The cases are grouped as follows:

a. Class I Test Procedures
   1. Building Thermal Envelope and Fabric Load Tests (see Section 4.3.1.1)
      - Building Thermal Envelope and Fabric Load Base Case (see Section 4.3.1.1.1)
      - Building Thermal Envelope and Fabric Load Basic Tests (see Section 4.3.1.1.2)
        - Low mass (see Section 4.3.1.1.2.1)
        - High mass (see Section 4.3.1.1.2.2)
        - Free float (see Section 4.3.1.1.2.3)
      - Building Thermal Envelope and Fabric Load In-Depth Tests (see Section 4.3.1.1.3)
      - Ground-Coupled Slab-on-Grade Analytical Verification Tests (see Section 4.3.1.1.4)
   2. Space-Cooling Equipment Performance Analytical Verification Tests (see Section 4.3.1.2)
      - Space-Cooling Equipment Performance Analytical Verification Base Case (see Section 4.3.1.2.1)
      - Space-Cooling Equipment Performance Parameter Variation Analytical Verification Tests (see Section 4.3.1.2.2)
   3. Space-Cooling Equipment Performance Comparative Tests (see Section 4.3.1.3)
      - Space-Cooling Equipment Performance Comparative Test Base Case (see Section 4.3.1.3.1)

Copyrighted material licensed to Sei Ito on 2020-06-26 for licensee's use only. All rights reserved. No further reproduction or distribution is permitted. Distributed by Techstreet for ASHRAE, www.techstreet.com

- Space-Cooling Equipment Performance Comparative Tests (see Section 4.3.1.3.2)

4. Space-Heating Equipment Performance Tests (see Section 4.3.1.4)
   - Space-Heating Equipment Performance Analytical Verification Base Case (see Section 4.3.1.4.1)
   - Space-Heating Equipment Performance Analytical Verification Tests (see Section 4.3.1.4.2)
   - Space-Heating Equipment Performance Comparative Tests (see Section 4.3.1.4.3)
5. Air-side HVAC Equipment Analytical Verification Test Cases (see Section 4.3.1.5)
   - Four-Pipe Fan-Coil (FC) System (see Section 4.3.1.5.1)
   - Single-Zone (SZ) System (see Section 4.3.1.5.2)
   - Constant-Volume Terminal Reheat (CV) System (see Section 4.3.1.5.3)
   - Variable-Air-Volume Terminal Reheat (VAV) System (see Section 4.3.1.5.4)

b. Class II Test Procedures
   1. Building Thermal Envelope and Fabric Load Base Case (see Section 4.3.2.1)
   2. Building Thermal Envelope and Fabric Load Tier 1 Tests (see Section 4.3.2.2)
   3. Building Thermal Envelope and Fabric Load Tier 2 Tests (see Section 4.3.2.3)

4.3.1 Class I Test Procedures

4.3.1.1 Building Thermal Envelope and Fabric Load Tests

4.3.1.1.1 Building Thermal Envelope and Fabric Load Base Case. The base-building plan is a low-mass, rectangular single zone with no interior partitions. It is presented in detail in Section 5.2.1.

4.3.1.1.2 Building Thermal Envelope and Fabric Load Basic Tests. The basic tests analyze the ability of software to model building envelope loads in a low-mass configuration with the following variations: window orientation, shading devices, setback thermostat, and night ventilation.

4.3.1.1.2.1 The low-mass basic tests (Cases 600 through 650) utilize lightweight walls, floor, and roof. They are presented in detail in Section 5.2.2.1.

4.3.1.1.2.2 The high-mass basic tests (Cases 900 through 960) utilize masonry walls and concrete slab floor and include an additional configuration with a sunspace. They are presented in detail in Section 5.2.2.2.

4.3.1.1.2.3 Free-float basic tests (Cases 600FF, 650FF, 900FF, and 950FF) have no heating or cooling system. They analyze the ability of software to model zone temperature in both low-mass and high-mass configurations with and without night ventilation. The tests are presented in detail in Section 5.2.2.3.

4.3.1.1.3 Building Thermal Envelope and Fabric Load In-Depth Tests. The in-depth cases are presented in detail in Section 5.2.3.

4.3.1.1.3.1 In-depth Cases 195 through 320 analyze the ability of software to model building envelope loads for a nondeadband ON/OFF thermostat control configuration with the following variations among the cases: no windows, opaque windows, exterior infrared emittance, interior infrared emittance, infiltration, internal gains, exterior shortwave absorptance, south solar gains, interior shortwave absorptance, window orientation, shading devices, and thermostat set points. These are a detailed set of tests designed to isolate the effects of specific algorithms. However, some of the cases may be incompatible with some building energy simulation programs.

4.3.1.1.3.2 In-depth Cases 395 through 440, 800, and 810 analyze the ability of software to model building envelope loads in a deadband thermostat control configuration with the following variations: no windows, opaque windows, infiltration, internal gains, exterior shortwave absorptance, south solar gains, interior shortwave absorptance, and thermal mass. This series of in-depth tests is designed to be compatible with more building energy simulation programs. However, the diagnosis of software using this test series is not as precise as for Cases 195 through 320.

4.3.1.1.4 Ground-Coupled Slab-on-Grade Analytical Verification Tests. These test cases use the results of detailed verified numerical models for ground-coupled heat transfer as a secondary mathematical truth standard for comparing the results of models typically used with whole-building energy simulation software. The test cases use an uninsulated slab-in-grade configuration (slab interior surface level with exterior soil surface). Parametric variations versus a steady-state base case (Case GC30b) include harmonically varying ground surface temperature, floor slab aspect ratio, slab area, water table depth (depth of constant ground temperature), slab-interior and ground-exterior surface heat transfer coefficients, and slab and ground thermal conductivity. The cases use steady-state and harmonic boundary conditions as applied within artificially constructed annual weather data, along with an adiabatic above-grade building envelope to isolate the effects of ground-coupled heat transfer. The test cases are structured within three categories: "b"-series cases (see Section 4.3.1.1.4.1), "a"-series cases (see Section 4.3.1.1.4.2), and "c"-series cases (see Section 4.3.1.1.4.3). The "b"-series cases are presented first because they are likely to be possible for more programs to run than the "a"- or "c"-series cases. If the program being tested can run the "a"-series cases as they are described, run the "a"-series cases before running any of the other cases of Section 5.2.4.

4.3.1.1.4.1 The "b"-series cases (GC30b through GC80b) are for midlevel-detailed and simplified models likely to be used in whole-building simulation programs. These cases are presented in Section 5.2.4.1.

4.3.1.1.4.2 The "a"-series cases (GC10a through GC40a) are for detailed numerical-methods programs (e.g., three-dimensional [3D] numerical models) that are either integrated within or run independently from whole-building energy simulation programs. Within the "a"-series cases, Case GC10a provides a 3D steady-state analytical solution for rectangular surface geometry.[B-9] These cases are presented in Section 5.2.4.2.

4.3.1.1.4.3 The "c"-series cases (GC30c through GC80c) apply boundary conditions with a fixed interior combined surface coefficient assumption of 7.95 $W/m^2 \cdot K$ and the exterior ground surface temperature equal to the outdoor dry-

Copyrighted material licensed to Sei Ito on 2020-06-26 for licensee's use only. All rights reserved. No further reproduction or distribution is permitted. Distributed by Techstreet for ASHRAE, www.techstreet.com

bulb temperature. These cases are presented in Section 5.2.4.3.

4.3.1.2 Space-Cooling Equipment Performance Analytical Verification Tests

4.3.1.2.1 Space-Cooling Equipment Performance Analytical Verification Base Case. The configuration of the base-case (Case CE100) building is a near-adiabatic rectangular single zone with only user-specified internal gains to drive steady-state cooling load. Mechanical equipment specifications represent a simple unitary vapor-compression cooling system or, more precisely, a split-system, air-cooled condensing unit with an indoor evaporator coil. Performance of this equipment is typically modeled using manufacturer design data presented in the form of empirically derived performance maps. This case is presented in detail in Section 5.3.1.

4.3.1.2.2 Space-Cooling Equipment Performance Parameter Variation Analytical Verification Tests. In these steady-state cases (Cases CE110 through CE200), the following parameters are varied: sensible internal gains, latent internal gains, zone thermostat set point (entering dry-bulb temperature [EDB]), and outdoor dry-bulb temperature (ODB). Parametric variations isolate the effects of the parameters singly and in various combinations and isolate the influence of the following: part-loading of equipment, varying sensible heat ratio, dry coil (no latent load) versus wet coil (with dehumidification) operation, and operation at typical Air-Conditioning, Heating and Refrigeration Institute (AHRI) rating conditions. In this way the models are tested in various domains of the performance map. These cases are presented in detail in Section 5.3.2.

4.3.1.3 Space-Cooling Equipment Performance Comparative Tests

4.3.1.3.1 Space-Cooling Equipment Performance Comparative Test Base Case. The configuration of this base case (Case CE300) is a near-adiabatic rectangular single zone with user-specified internal gains and outdoor air to drive dynamic (hourly varying) loads. The cases apply realistic, hourly varying annual weather data for a hot and humid climate. The mechanical system is a vapor-compression cooling system similar to that described in Section 4.3.1.2.1, except that it is a larger system and includes an expanded performance data set covering a wider range of operating conditions (i.e., wider range of ODB, EDB, and entering wet-bulb [EWB] temperatures). Also, an air-mixing system is present so that outdoor air mixing and economizer control models can be tested. This case is presented in detail in Section 5.3.3.

4.3.1.3.2 Space-Cooling Equipment Performance Comparative Tests. In these cases (Cases CE310 through CE545), which apply the same weather data as Case CE300, the following parameters are varied: sensible internal gains, latent internal gains, infiltration rate, outdoor air fraction, thermostat set points, and economizer control settings. Results analysis also isolates the influence of part loading of equipment, ODB sensitivity, and dry coil (no latent load) versus wet coil (with dehumidification) operation. These cases help to scale the significance of simulation results disagreements for a realistic context, which is less obvious in the steady-state cases described above. These cases are presented in detail in Section 5.3.4.

4.3.1.4 Space-Heating Equipment Performance Tests

4.3.1.4.1 Space-Heating Equipment Performance Analytical Verification Base Case. The configuration of the base-case (Case HE100) building is a rectangular single zone that is near-adiabatic on five faces with one heat exchange surface (the roof). Mechanical equipment specifications represent a simple unitary fuel-fired furnace with a circulating fan and a draft fan. Performance of this equipment is typically modeled using manufacturer design data presented in the form of empirically derived performance maps. This case is presented in detail in Section 5.4.1.

4.3.1.4.2 Space-Heating Equipment Performance Analytical Verification Tests. In these cases (Cases HE110 through HE170), the following parameters are varied: efficiency, weather (resulting in different load conditions from full load to part load to no load to time-varying load), circulating fan operation, and draft fan operation. In this way the basic functionalities of the models are tested in various domains of the performance map. These cases are presented in detail in Section 5.4.2.

4.3.1.4.3 Space-Heating Equipment Performance Comparative Tests. In these cases (Cases HE210 through HE230), the following parameters are varied: weather (realistic temperature conditions are used), thermostat control strategy, and furnace size (undersized furnace). In this way the models are tested with more realistic conditions in various domains of the performance map. These cases also test the interactions between furnace, control, and zone models. They are presented in detail in Section 5.4.3.

4.3.1.5 Air-Side HVAC Equipment Analytical Verification Tests. These test cases, presented in detail in Section 5.5, are designed to test the ability to model HVAC air distribution system equipment. The cases complement the test cases of Section 5.3, which test the ability to model the working-fluid side of HVAC equipment (also see Sections 4.3.1.2 and 4.3.1.3), and the test cases of Section 5.4, which test the ability to model space heating equipment performance (also see Section 4.3.1.4). Four systems are tested as described in the following subsections.

4.3.1.5.1 Four-Pipe Fan-Coil (FC) System. This is the most simple of the test systems. It is a single-zone system with heating and cooling coils, zone air exhaust, and limited outdoor air (no economizer control), and it does not include a return air fan. The FC system provides a good starting point for testing basic mass flow and heat balance modeling before addressing more complex air systems. The FC system tests include three sets of steady-state outdoor and zone conditions in heating, dry-coil cooling, and wet-coil cooling modes. The FC system cases are presented in detail in Section 5.5.1.

4.3.1.5.2 Single-Zone (SZ) System. The SZ system is based on the FC system but adds a return air fan and economizer outdoor air control. The SZ system tests include five sets of steady-state outdoor and zone conditions in heating, dry-coil cooling, and wet-coil cooling modes, and with temperature and enthalpy economizer outdoor air control strategies applied to selected conditions. The SZ system cases are presented in detail in Section 5.5.2.

4.3.1.5.3 Constant-Volume Terminal Reheat (CV) System. The CV system is based on the SZ system, but adds

Copyrighted material licensed to Sei Ito on 2020-06-26 for licensee's use only.
All rights reserved. No further reproduction or distribution is permitted. Distributed by Techstreet for ASHRAE, www.techstreet.com

multiple (two) zones, system supply air temperature control, and terminal reheat coils. The five sets of CV system test-case conditions are the same as those for the SZ system but applying different zone load and temperature set-point parameters for the second zone. The CV system cases are presented in detail in Section 5.5.3.

4.3.1.5.4 Variable-Air-Volume Terminal Reheat (VAV) System. The VAV system is based on the CV system but applies a variable airflow supply fan and terminal zone supply air dampers (along with terminal reheat coils). The VAV system test-case conditions are the same as those for the CV system. The VAV system cases are presented in detail in Section 5.5.4.

4.3.2 Class II Test Procedures

4.3.2.1 Building Thermal Envelope and Fabric Load Base Case. The base-building plan is a 1539 ft^2 single-story house with one conditioned zone (the main floor), an unconditioned attic, and a raised floor exposed to air. It is presented in detail in Section 7.2.1.

4.3.2.2 Building Thermal Envelope and Fabric Load Tier 1 Tests. The Tier 1 cases test the ability of software to model building envelope loads in the base-case configuration with the following variations: infiltration; wall and ceiling R-value; glazing physical properties, area, and orientation; shading by a south overhang; internal loads; exterior surface color; energy-inefficient building; raised floor exposed to air; uninsulated and insulated slab-on-grade; uninsulated and insulated basement. The Tier 1 Tests are presented in detail in Section 7.2.2.

4.3.2.3 Building Thermal Envelope and Fabric Load Tier 2 Tests. The Tier 2 tests consist of the following additional elements related to passive solar design: variation in mass, glazing orientation, east and west shading, glazing area, and south overhang. The Tier 2 tests are presented in detail in Section 7.2.3.

4.4 Comparing Output to Other Results. For Class I test procedures,

a. Informative Annex B8, Section B8.1, gives example simulation results for the building thermal envelope and fabric load tests of Sections 5.2.1, 5.2.2, and 5.2.3;
b. Informative Annex B8, Section B8.2, gives analytical solution, verified numerical model, and example simulation results for the ground-coupled slab-on-grade tests of Section 5.2.4; and
c. Informative Annex B16 gives quasi-analytical solution results and example simulation results for the HVAC equipment performance tests of Sections 5.3, 5.4, and 5.5.

For Class II test procedures (See Section 7), Informative Annex B20 gives example simulation results.

The user may choose to compare output with the example results provided in Informative Annexes B8, B16, and B20 or with other results that were generated using this standard method of test (including self-generated quasi-analytical solutions related to cases where such solutions are provided). For Class I test procedures, information about how the example results were produced is included in Informative Annex B11 for building thermal envelope and fabric load and ground-coupled slab-on-grade tests, and in Informative Annex B17 for HVAC equipment performance tests. For Class II test procedures, information about how the example results were produced is included in Informative Annex B21.

For the convenience of users who wish to plot or tabulate their results along with the example results, electronic versions of the example results are included with the accompanying electronic media: for Informative Annex B8 with the files RESULTS5-2A.XLSX and RESULTS5-2B.XLSX; for Informative Annex B16 with the files RESULTS5-3A.XLSX, RESULTS5-3B.XLSX, RESULTS5-4.XLSX, RESULTS5-5FCSZ.XLSX, and RESULTS5-5CVVV.XLSX; and for Informative Annex B20 with the file RESULTS7-2.XLS. Documentation for navigating these results files is included on the accompanying electronic media and is printed in Informative Annex B10.

4.4.1 Criteria for Determining Agreement between Results. The requirements of the normative sections of Standard 140 ensure that users follow the specified method of test and that test results are provided as specified. There are no formal criteria for when results agree or disagree with either the example results provided in Informative Annexes B8, B16, or B20, or with other results generated using this method of test. Determination of when results agree or disagree is left to the organization referencing the method of test or to other users who may be running the tests for their own quality assurance purposes. In making this determination, the following should be considered:

a. Magnitude of results for individual cases.
b. Magnitude of difference in results between certain cases (e.g., Case 610 – Case 600).
c. Same direction of sensitivity (positive or negative) for difference in results between certain cases (e.g., Case 610 – Case 600).
d. Whether results are logically counterintuitive with respect to known or expected physical behavior.
e. Availability of analytical solution, quasi-analytical solution, or verified numerical model results (i.e., mathematical or secondary mathematical truth standards as described in Informative Annex B16, Section B16.2, and Informative Annex B8, Section B8.2.1).
f. For analytical verification tests, the degree of disagreement that occurred for other simulation results versus the analytical solution, quasi-analytical solution, or verified numerical model results.
g. Example simulation results do not represent a truth standard.

4.4.2 Diagnostic Logic for Determining Causes of Differences among Results. To help the user identify what algorithm in the tested program is causing specific differences between programs, diagnostic flow charts are provided as Informative Annex B9.

Copyrighted material licensed to Sei Ito on 2020-06-26 for licensee's use only. All rights reserved. No further reproduction or distribution is permitted. Distributed by Techstreet for ASHRAE, www.techstreet.com

5. CLASS I TEST PROCEDURES

The Class I test procedures shall be applied as specified in Section 5.

Informative Note: Class I test procedures are detailed diagnostic tests intended for use with building energy simulation software tools having simulation time-steps of one hour or less. Energy analysis computer tools that do not meet this simulation time-step requirement but produce annual or seasonal results may be evaluated using Section 7, "Class II Test Procedures," of this standard. The Class I test cases are designed for more detailed diagnosis of simulation models than the Class II test cases.

5.1 Modeling Approach. This modeling approach shall apply to all of the test cases presented in Section 5.

5.1.1 Time Convention. All references to "time" in this specification are to local standard time and assume that hour 1 = the interval from midnight to 1 A.M. Daylight savings time or holidays shall not be used for scheduling.

Informative Note: TMY weather data are in hourly bins corresponding to solar time, as specified in Normative Annex A1, Section A1.5. TMY2 and WYEC2 data are in hourly bins corresponding to local standard time.

5.1.2 Geometry Convention. If the program being tested includes the thickness of walls in a three-dimensional (3D) definition of the building geometry, then wall, roof, and floor thicknesses shall be defined such that the interior air volume of the building model remains as specified. The thicknesses shall extend exterior to the currently defined internal volume.

Informative Notes: For example, for the building thermal envelope and fabric load test cases of Sections 5.2.1, 5.2.2, and 5.2.3, interior air volume would be calculated as 6 × 8 × 2.7 m = 129.6 m^3 (19.7 × 26.2 × 8.9 ft = 4576.8 ft^3).

5.1.3 Nonapplicable Inputs. If the specification includes input values that do not apply to the input structure of the program being tested, disregard the nonapplicable inputs and continue.

Informative Note: Selected equivalent inputs are included in the test specification for those programs that may need them.

5.1.4 Consistent Modeling Methods. Where options exist within a simulation program for modeling a specific thermal behavior, consistent modeling methods shall be used for all cases. The option that is used shall be documented in the Standard Output Report (as specified in Normative Annex A2).

Informative Note: For example, if a program gives a choice of methods for modeling windows, the same window modeling method is to be applied for all cases.

5.1.5 Equivalent Modeling Methods. Where a program or specific model within a program does not allow direct input of specified values, or where input of specified values causes instabilities in a program's calculations, modelers shall develop equivalent inputs that match the intent of the test specification as nearly as the software being tested allows. Such equivalent inputs shall be developed based on the data provided in the test specification, and such equivalent inputs shall have a mathematical, physical, or logical basis and shall be applied consistently throughout the test cases. The modeler shall document the equivalent modeling method in the Standard Output Report (see Normative Annex A2).

5.1.6 Use of Nonspecified Inputs. Use of nonspecified inputs shall be permitted only for the following specified sections relating to the following topics:

- Interior combined radiative and convective surface coefficients in Sections 5.2.1.10, 5.2.3.2.2, and 5.3.1.9.
- Interior solar distribution in Sections 5.2.1.12, 5.2.2.1.2.2, 5.2.2.2.7.4, 5.2.3.9.3, 5.2.3.10.2, and 5.2.3.12.2.
- Air density given at specific altitudes for the space-cooling and space-heating equipment cases in Sections 5.3.1.4.3, 5.3.3.4.3, and 5.4.1.4.3.

Use of nonspecified inputs shall be permitted only if there is a mathematical, physical, or logical basis for applying them. Where different values are used, they shall be applied consistently throughout the test cases. Use of nonspecified inputs shall be documented in the Standard Output Report specified in Normative Annex A2.

5.1.7 Simulation Initialization and Preconditioning. If the program being tested allows for preconditioning (iterative simulation of an initial time period until temperatures, fluxes, loads, or all of these, stabilize at initial values), that capability shall be used. If the program being tested allows, and if applicable to the model, the simulation initialization process shall begin with zone air conditions that equal the outdoor air conditions.

5.1.8 Simulation Duration

5.1.8.1 Results for the tests of Sections 5.2.1, 5.2.2, 5.2.3, 5.3.3, and 5.3.4 shall be taken from full annual simulations.

5.1.8.2 For the tests of Section 5.2.4, if the program being tested allows multiyear simulations, models shall run for a number of years to satisfy the requirements of specific test cases. If the software being tested is not capable of simulation duration sufficient to satisfy the requirements of specific test cases, the simulation shall be run for the maximum duration allowed by the software being tested.

Informative Note: The duration to achieve requirements of specific test cases may vary among the test cases.

5.1.8.3 For the tests of Sections 5.3.1 and 5.3.2, the simulation shall be run for at least the first two months for which the weather data are provided. Provide output for the second month of the simulation (February) in accordance with Section 6.3.1.

Informative Note: The first month of the simulation period (January) serves as an initialization period.

5.1.8.4 For the tests of Section 5.4, the simulation shall be run for at least the first three months for which the weather data are provided. Provide output for the first three months of the year (January 1 through March 31) in accordance with Section 6.4.

5.1.8.5 For the tests of Section 5.5, the simulation shall be run until the final hour output agrees with the previous hour output. Provide output in accordance with Section 6.5.

5.1.9 Rules for Modifying Simulation Programs or Simulation Inputs. Modifications to simulation programs or simulation inputs shall have a mathematical, physical, or logical

Copyrighted material licensed to Sei Ito on 2020-06-26 for licensee's use only. All rights reserved. No further reproduction or distribution is permitted. Distributed by Techstreet for ASHRAE, www.techstreet.com

basis and shall be applied consistently across tests. Arbitrary modification of a simulation program's input or internal code solely for the purpose of more closely matching a given set of results shall be prohibited.

If changes are made to the source code of the software for the purpose of performing tests, and these changes are not available in publicly released versions of the software, then the changes shall be documented in sufficient detail, using the modeler report template provided in Normative Annex A2, so that the implications of the changes are assessable.

5.2 Input Specifications for Building Thermal Envelope and Fabric Load Tests

5.2.1 Case 600: Base Case. Begin with Case 600. Case 600 shall be modeled as specified in this section and its subsections.

Informative Note: The bulk of the work for implementing the tests is assembling an accurate base-building model. It is recommended that base-building inputs be double checked and results disagreements be diagnosed before proceeding to the other cases.

5.2.1.1 Weather and Site Data

5.2.1.1.1 Weather Data. The DRYCOLD.TMY weather data provided with the electronic files accompanying this standard shall be used for all cases in Sections 5.2.1, 5.2.2, and 5.2.3. These data are described in Normative Annex A1, Section A1.1.1.

5.2.1.1.2 Site Data. The site parameters provided in Normative Annex A1, Table A1-1 shall be used.

The solar reflectance of the site ground surface = 0.2.

5.2.1.2 Output Requirements. Case 600 requires the following output:

a. All non-free-float case output in accordance with Section 6.2.1.1
b. Case-600-only output in accordance with Section 6.2.1.2
c. Daily hourly output as specified for Case 600 in Section 6.2.1.8
d. General reporting requirements of Section 6.1

Informative Note: In this description, the term "free-float cases" refers to cases designated with "FF" in the case description (i.e., 600FF, 650FF, 900FF, 950FF); non-free-float cases are all the other cases described in Sections 5.2.1, 5.2.2, and 5.2.3. (Informative Annex B1, Tables B1-2 and B1-3, include a summary listing of the cases of Sections 5.2.1, 5.2.2, and 5.2.3).

5.2.1.3 Building Geometry. The base-building plan shall be a 48 m^2 floor area, single-story, low-mass building with rectangular-prism geometry and 12 m^2 of south-facing windows as shown in Figure 5-1.

5.2.1.4 Material Properties. For the wall, floor, and roof, the thermal and material properties provided in Table 5-1 shall be used. For programs that automatically calculate interior surface radiation and convection, or that treat interior surface coefficients as specified in Section 5.2.1.10, variation of individual interior surface coefficient U-values and total U- and total UA-values from those specified in Table 5-1 shall be permitted.

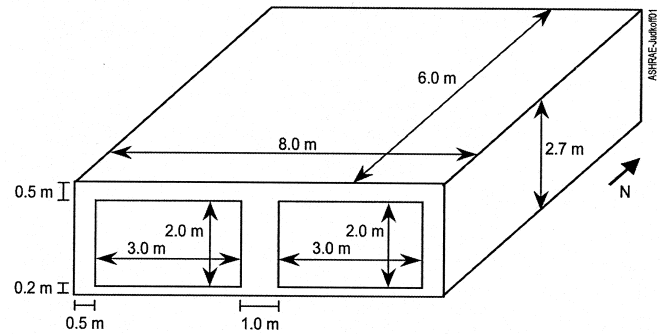

Figure 5-1 Isometric south windows—unshaded (Case 600).

5.2.1.5 Ground Coupling. The exterior surface of the floor contacts the ground.

Informative Note: To reduce uncertainty regarding testing the other aspects of simulating the building envelope, the floor insulation described in Table 5-1 has been made very thick to effectively decouple the floor thermally from the ground.

5.2.1.5.1 The underfloor insulation shall have the minimum density and specific heat that the program being tested allows.

5.2.1.5.2 For software that requires input of ground thermal properties, the ground in the vicinity of the building shall be dry-packed soil with the following characteristics:

- Soil thermal conductivity k = 1.3 W/(m·K)
- Soil density = 1500 kg/m^3
- Soil specific heat = 800 J/(kg·K)
- Deep ground temperature = 10°C

5.2.1.6 Infiltration. The infiltration rate shall be 0.5 ach, continuously (24 hours per day for the full year). The infiltration rate shall be independent of wind speed, indoor/outdoor temperature difference, and other variables.

5.2.1.6.1 The weather data file represents a high-altitude site with an elevation of 1609 m above sea level. If the program being tested does not use barometric pressure from the weather data or otherwise automatically correct for the change in air density due to altitude, then the specified infiltration rates shall be adjusted to yield mass flows equivalent to those occurring at 1609 m altitude, as shown in Table 5-2.

Informative Note: Air density at 1609 m altitude is roughly 80% of that at sea level. The calculation technique used to develop Table 5-2 is provided as background information in Informative Annex B3.

5.2.1.7 Internally Generated Sensible Heat. The following internal heat gains shall be used:

- Internal gains shall be 200 W, continuously (24 hours per day for the full year).
- Internal gains shall be 100% sensible, 0% latent.
- Internal gains shall be 60% radiative, 40% convective.

Informative Note: Internally generated sensible and latent internal gains are assumed to be distributed evenly throughout

Copyrighted material licensed to Sei Ito on 2020-06-26 for licensee's use only. All rights reserved. No further reproduction or distribution is permitted. Distributed by Techstreet for ASHRAE, www.techstreet.com

Table 5-1 Material Specifications Lightweight Case

Element	k, W/(m·K)	Thickness, m	U, W/(m²·K)	R, (m²·K)/W	Density, kg/m³	c_p, J/(kg·K)
Lightweight Case: Exterior Wall (inside to outdoors)						
Interior surface coefficient			8.290	0.121		
Plasterboard	0.160	0.012	13.333	0.075	950.000	840.000
Fiberglass quilt	0.040	0.066	0.606	1.650	12.000	840.000
Wood siding	0.140	0.009	15.556	0.064	530.000	900.000
Exterior surface coefficient			29.300	0.034		
Total air-air			**0.514**	**1.944**		
Total surf-surf			**0.559**	**1.789**		
Lightweight Case: Floor (inside to outdoors)						
Interior surface coefficient [a]			8.290	0.121		
Timber flooring	0.140	0.025	5.600	0.179	650.000	1200.000
Insulation	0.040	1.003	0.040	25.075	0 [b]	0 [b]
Total air-surf			**0.039**	**25.374**		
Total surf-surf			**0.040**	**25.254**		
Lightweight Case: Roof (inside to outdoors)						
Interior surface coefficient [a]			8.290	0.121		
Plasterboard	0.160	0.010	16.000	0.063	950.000	840.000
Fiberglass quilt	0.040	0.1118	0.358	2.794	12.000	840.000
Roofdeck	0.140	0.019	7.368	0.136	530.000	900.000
Exterior surface coefficient			29.300	0.034		
Total air-air			**0.318**	**3.147**		
Total surf-surf			**0.334**	**2.992**		
Summary: Lightweight Case						
Component	**Area, m²**	**UA, W/K**				
Wall	63.600	32.715				
Floor	48.000	1.892				
Roof	48.000	15.253				
South window	12.000	36.000				
Infiltration		18.440 [c]				
Total UA (with south glass)		**104.300**				
Total UA (without south glass)		**68.300**				
		ach	**Volume, m³**	**Altitude, m**		
		0.500	129.600	1609.000		

a. ***Informative Note:*** The interior film coefficient for floors and ceilings is a compromise between upward and downward heat flow for summer and winter.
b. Underfloor insulation has the minimum density and specific heat the program being tested will allow, but not <0.
c. ***Informative Note:*** UA corresponding to infiltration based on ach × volume × (specific heat of air) × (density of air at specified altitude).

Copyrighted material licensed to Sei Ito on 2020-06-26 for licensee's use only. All rights reserved. No further reproduction or distribution is permitted. Distributed by Techstreet for ASHRAE, www.techstreet.com

Table 5-2 Infiltration Rates Depending on the Presence of Automatic Altitude Adjustment

Altitude Adjustment Algorithm	Input Air Changes per Hour, ach	Adjustment Factor
Programs with automatic altitude adjustment; set altitude to 1609 m above sea level	0.5	1.0
Programs with fixed assumption that site is at sea level (no automatic adjustment)	0.41	0.822 [a]

a. (Specified rate) × 0.822 = (altitude adjusted rate)

Table 5-3 Opaque Surface Radiative Properties, Case 600

	Interior Surface	Exterior Surface
Solar absorptance	0.6	0.6
Infrared emittance	0.9	0.9

Table 5-4 Exterior Combined Surface Coefficient Versus Surface Texture, Case 600

Surface Texture	Exterior Combined Surface Coefficient
Brick or rough plaster (all walls and roofs)	29.3 W/(m^2·K)
Glass (window)	21.0 W/(m^2·K)

Informative Note: All values in table based on a mean annual wind speed of 4.02 m/s.

Table 5-5 Interior Combined Surface Coefficient Versus Surface Orientation

Orientation of Surface and Heat Flow	Interior Combined Surface Coefficient
Horizontal heat transfer on vertical surfaces	8.29 W/(m^2·K)
Upward heat transfer on horizontal surfaces	9.26 W/(m^2·K)
Downward heat transfer on horizontal surfaces	6.13 W/(m^2·K)

the zone air. These are internally generated sources of heat (from equipment, lights, people, animals, etc.) that are not related to heating, ventilating, and air conditioning (HVAC).

5.2.1.8 Opaque Surface Radiative Properties. The interior and exterior opaque surfaces solar (visible and ultraviolet wavelengths) absorptances and infrared emittances shall be applied to all opaque surfaces as specified in Table 5-3.

5.2.1.9 Exterior Combined Radiative and Convective Surface Coefficients. If the program being tested automatically calculates exterior surface radiation and convection, skip the instructions in this section and proceed to Section 5.2.1.10. If the program being tested does not calculate this effect, then the information provided in Table 5-4 shall be used.

Informative Note: The exterior combined radiative and convective surface coefficient for the glass and very smooth opaque surfaces (used only in some of the in-depth cases of Section 5.2.3) is specified as equivalent (applying infrared emittance of 0.9) for convenience of input, even though the infrared emittance for common window glass is usually 0.84.

Informative Note: The calculation technique used to develop Table 5-4 is provided as background information in Informative Annex B4. A calculation technique that may be used for comparing combined surface coefficients as a function of infrared emittance is provided as background information in Informative Annex B5.

5.2.1.10 Interior Combined Radiative and Convective Surface Coefficients. If the program being tested automatically calculates interior surface radiation and convection, skip the instructions in this section and proceed to Section 5.2.1.11. If the program being tested does not calculate these effects, the constant combined radiative and convective surface coefficients provided in Table 5-5 shall be used.

If the program being tested does not allow assignment of values based on the direction of heat flow or other scheduling of these coefficients, 8.29 W/(m^2·K) shall be used for all horizontal surfaces. For cases with an interior infrared emittance of 0.9, a radiative portion of 5.13 W/(m^2·K) shall be permitted for these combined coefficients.

Use of different (nonspecified) values shall not be prohibited if there is a mathematical, physical, or logical basis for applying them. Where different values are used, they shall be applied consistently throughout the test cases. Use of nonspecified values shall be documented in the Standard Output Report specified in Normative Annex A2.

Informative Note: The interior combined radiative and convective surface coefficient for the glass is specified as equivalent to that for other vertical surfaces (assuming infrared emittance of 0.9) for convenience of input, even though the infrared emittance for common window glass is usually 0.84. Background information regarding values provided in Table 5-5 is available in the 2009 *ASHRAE Handbook—Fundamentals*[B-10], Chapter 26. Informative Annex B5 includes background information about combined radiative and convective film coefficients.

5.2.1.11 Transparent Window

5.2.1.11.1 Geometry. The windows shall have no sash area. The rough openings shown in Figure 5-1 shall contain only the double-pane glass specified in Tables 5-6 and 5-7.

5.2.1.11.2 Window Properties. The basic properties of the window provided in Table 5-6 shall be used.

5.2.1.11.3 Incidence-Angle-Dependent Optical Properties. For programs that apply incidence-angle-dependent optical properties, the values given in Table 5-7 shall be used. For programs that need transmittance or reflectance at other angles of incidence, the user shall be permitted to interpolate between the values in Table 5-7 using the cosine of the incident angle as the basis for interpolation. Where unspecified equivalent inputs are needed, values that are consistent with those specified shall be applied according to the instructions of Section 5.1.5, "Equivalent Modeling Methods."

Informative Note: Many programs use different algorithms to calculate window transmittance and therefore require

Copyrighted material licensed to Sei Ito on 2020-06-26 for licensee's use only. All rights reserved. No further reproduction or distribution is permitted. Distributed by Techstreet for ASHRAE, www.techstreet.com

Table 5-6 Window Properties

Property	Value
Extinction coefficient	0.0196/mm
Number of panes	2
Pane thickness (standard 1/8 in. glass under the inch-pound [I-P] system)	3.175 mm
Air-gap thickness	13 mm
Index of refraction	1.526
Normal direct beam transmittance through one pane in air	0.86156
Thermal conductivity of glass	1.06 W/(m·K)
Conductance of each glass pane	333 W/(m^2·K) [R-0.003 m^2·K/W]
Combined radiative and convective heat transfer coef of air gap h_s	6.297 W/(m^2·K) [R-0.1588 m^2·K/W]
Exterior combined surface coefficient h_o	21.00 W/(m^2·K) [R-0.0476 m^2·K/W]
Interior combined surface coefficient h_i	8.29 W/(m^2·K) [R-0.1206 m^2·K/W]
U-value from interior air to ambient air	3.0 W/(m^2·K) [R-0.3333 m^2·K/W]
Hemispherical infrared emittance of ordinary uncoated glass	0.84 (Use 0.9 for simplicity of input. If the program being tested must use 0.84, this is acceptable because the effect on outputs will be less than 0.5%.)
Density of glass	2500 kg/m^3
Specific heat of glass	750 J/(kg·K)
Curtains, blinds, frames, spacers, mullions, obstructions inside the window	None
Double-pane shading coefficient (at normal incidence)	0.907
Double-pane solar heat gain coefficient (at normal incidence)	0.789

Table 5-7 Angular Dependence of Optical Properties for the Double-Pane Window*

Angle of Incidence	Trans.	Abs. Outer Pane	Abs. Inner Pane	Refl.	SHGC
0	0.747	0.064	0.052	0.136	0.789
10	0.747	0.065	0.053	0.136	0.789
20	0.745	0.066	0.053	0.136	0.787
30	0.740	0.068	0.055	0.137	0.784
40	0.730	0.071	0.057	0.143	0.775
50	0.707	0.075	0.058	0.160	0.754
60	0.652	0.080	0.059	0.210	0.700
70	0.517	0.086	0.054	0.343	0.563
80	0.263	0.094	0.041	0.602	0.302

*"Trans." = transmittance, "Refl." = reflectance, "Abs." = absorptance, "SHGC" = solar heat gain coefficient

different inputs. For example, SERIRES[B-11] calculates transmittance, absorptance, and reflectance for each hourly incidence angle given the index of refraction, extinction coefficient, glazing thickness, and number of panes in the window assembly.

Table 5-8 Interior Solar Distribution Fractions by Surface, Case 600

Surface	Floor	Ceiling	East Wall	West Wall	North Wall	South Wall	Solar Lost through Window
Solar fraction	0.642	0.168	0.038	0.038	0.053	0.026	0.035

BLAST[B-12] calculates extinction coefficient, absorptance, reflectance, and angle-dependent transmittance given the direct normal transmittance of a single pane in air, glass thickness, index of refraction, and number of panes. Extensive information about the window properties has therefore been provided so that equivalent input for the window will be possible for many programs. Use only the information that is relevant to the program being tested.

Informative Note: For further informative discussion related to calculating angle-dependent glazing optical properties, refer to Informative Annex B6.

5.2.1.12 Interior Solar Distribution. If the program being tested does not calculate this effect internally but requires distribution fractions from the user, then the use of Table 5-8 shall be permitted. Use of different (nonspecified) values shall not be prohibited if there is a mathematical, physi-

Copyrighted material licensed to Sei Ito on 2020-06-26 for licensee's use only. All rights reserved. No further reproduction or distribution is permitted. Distributed by Techstreet for ASHRAE, www.techstreet.com

cal, or logical basis for applying them. Where different values are used, they shall be applied consistently throughout the test cases. The use of nonspecified values shall be documented in the Standard Output Report (see Normative Annex A2).

Informative Note: Table 5-8 presents an approximate calculation of solar distribution fractions by assuming that 100% of the incoming radiation strikes the floor first and that all reflections are diffuse. Fractional values for the walls with windows (i.e., the south wall) include the portion of the solar radiation absorbed by the glass (as it passes back out the window) and conducted back into the zone. Solar radiation absorbed by the glass (and conducted inward) as it initially passes into the building is not included in the values in Table 5-8. Informative Annex B7 gives background information regarding the calculation technique used for developing these solar fractions.

5.2.1.13 Mechanical System. All equipment shall be 100% efficient with no duct losses and no capacity limitations.

The mechanical system shall be modeled with the following features as noted below and in Sections 5.2.1.13.1 and 5.2.1.13.2:

a. 100% convective air system.
b. The thermostat senses only the air temperature.
c. Nonproportional-type thermostat (as specified in Section 5.2.1.13.1).
d. No latent heat extraction.

Informative Note: The intent of the mechanical system is to produce only pure heating load and sensible cooling load outputs.

5.2.1.13.1 Thermostat Control Strategy

5.2.1.13.1.1 The following thermostat control strategy shall be used:

- Heat = ON IF Temperature < 20°C; otherwise, Heat = OFF
- Cool = ON IF Temperature > 27°C; otherwise, Cool = OFF

Informative Note: "Temperature" refers to conditioned-zone air temperature.

5.2.1.13.1.2 The thermostat is nonproportional.

Informative Note: A nonproportional thermostat operates such that when the conditioned-zone air temperature exceeds the thermostat cooling set point, the heat extraction rate is assumed to equal the maximum capacity of the cooling equipment. Likewise, when the conditioned-zone air temperature drops below the thermostat heating set point, the heat addition rate equals the maximum capacity of the heating equipment. A proportional thermostat throttles the heat addition rate (or extraction rate) in proportion to the difference between the zone set-point temperature and the actual zone temperature. A proportional thermostat model can be made to approximate a nonproportional thermostat model by setting a very small throttling range (the minimum allowed by the program being tested).

5.2.1.13.2 Equipment Characteristics. The following inputs shall be used:

- Heating capacity = 1000 kW (effectively infinite)
- Effective efficiency = 100%

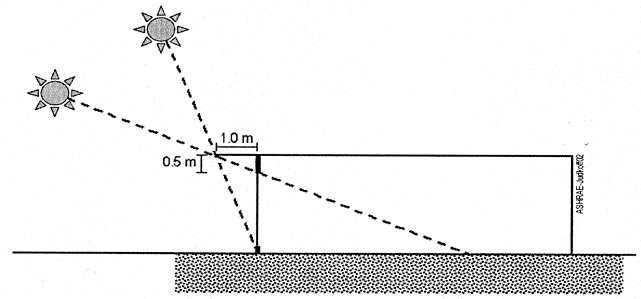

Figure 5-2 Section of south window overhang (Case 610).

- Cooling capacity = 1000 kW (effectively infinite)
- Effective efficiency = 100%
- Sensible cooling only; no latent heat load calculation
- Waste heat from fan = 0

Equipment efficiency shall always be 100% independent of part loading, indoor dry-bulb temperature and humidity ratio, outdoor dry-bulb temperature and humidity ratio, and/or other conditions.

5.2.2 Basic Tests. The basic tests shall be modeled as specified in this section and its subsections.

Informative Note: It is recommended to double check the Case 600 base-building inputs and to diagnose Case 600 results disagreements before proceeding to the other cases.

5.2.2.1 Low Mass Tests. The low-mass basic tests shall be modeled as detailed in this section and its subsections. The low-mass basic tests include Cases 600 through 650. Once an accurate input description for Case 600 has been developed, the remaining low-mass basic cases, except Case 630, shall be input by modifying Case 600. Case 630 shall be input by modifying Case 620.

5.2.2.1.1 Case 610: South Shading. Case 610 shall be modeled exactly the same as Case 600 except for changes noted in the subsections below.

5.2.2.1.1.1 South Overhang Geometry. The overhang detailed in Figure 5-2 shall be added. The horizontal overhang for south-facing windows shall extend across the entire length of the south wall.

5.2.2.1.1.2 Output Requirements. Case 610 requires the following output:

a. All non-free-float-case output in accordance with Section 6.2.1.1
b. Additional output in accordance with Section 6.2.1.3
c. General reporting requirements of Section 6.1

5.2.2.1.2 Case 620: East/West Window Orientation. Case 620 shall be modeled exactly the same as Case 600 except for changes noted in the subsections below.

5.2.2.1.2.1 Window Orientation. The window orientation shall be modified, as detailed in Figure 5-3, such that there shall be 6 m^2 of window area facing east, 6 m^2 of window area facing west, and no other windows. Other than the change in orientation, the windows shall be exactly as in Case 600.

Copyrighted material licensed to Sei Ito on 2020-06-26 for licensee's use only. All rights reserved. No further reproduction or distribution is permitted. Distributed by Techstreet for ASHRAE, www.techstreet.com

Informative Table 5-9 Interior Solar Distribution Fractions by Surface, Case 620

Surface	Floor	Ceiling	East Wall	West Wall	North Wall	South Wall	Solar Lost through Windows
Solar fraction	0.642	0.168	0.025	0.025	0.0525	0.0525	0.035

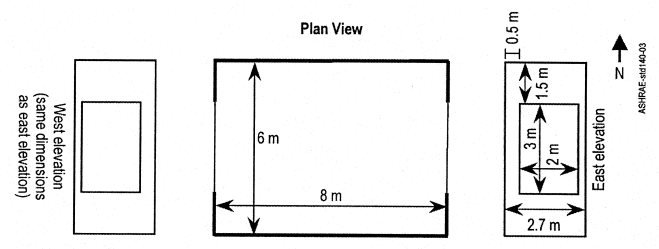

Figure 5-3 East and west window (Case 620).

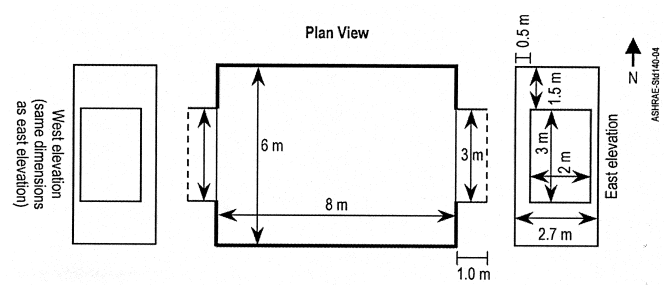

Figure 5-4 East and west window shading (Case 630).

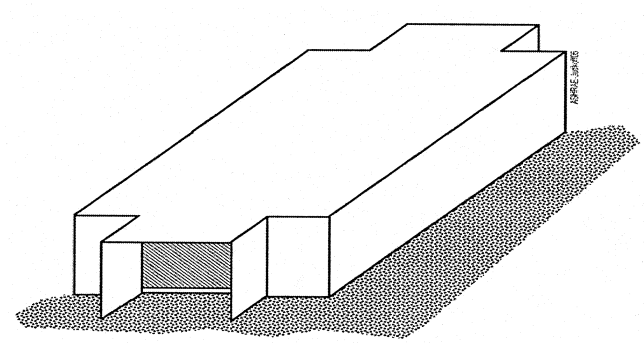

Figure 5-5 Isometric east and west window shading (Case 630).

5.2.2.1.2.2 Interior Solar Distribution. If the program being tested does not calculate interior solar distribution internally but requires distribution fractions from the user, then the use of Table 5-9 shall be permitted. Use of different (nonspecified) values shall not be prohibited if there is a mathematical, physical, or logical basis for applying them. Where different values are used, they shall be applied consistently throughout the test cases. The use of nonspecified values shall be documented in the Standard Output Report (see Normative Annex A2).

Informative Note: Table 5-9 presents an approximate calculation of solar distribution fractions adjusted for the geometry of Case 620 by assuming that 100% of the incoming radiation strikes the floor first and that all reflections are diffuse. Fractional values for the walls with windows (i.e., the east and west walls) include the portion of the solar radiation absorbed by the glass (as it passes back out the window) and conducted back into the zone. Solar radiation absorbed by the glass (and conducted inward) as it initially passes into the building is not included in the values in Table 5-9. Informative Annex B7 gives background information regarding the calculation technique used for developing these solar fractions.

5.2.2.1.2.3 Output Requirements. Case 620 requires the following output:

a. All non-free-float case output in accordance with Section 6.2.1.1
b. Additional output in accordance with Section 6.2.1.4
c. General reporting requirements of Section 6.1

5.2.2.1.3 Case 630: East/West Shading. Case 630 shall be modeled exactly the same as Case 620 except for changes noted in the subsections below.

5.2.2.1.3.1 East/West Overhang and Fin Geometry. Shading devices shall be added to the east and west windows as detailed in Figures 5-4 and 5-5.

5.2.2.1.3.2 Output Requirements. Case 630 requires the following output:

a. All non-free-float case output in accordance with Section 6.2.1.1
b. Additional output in accordance with Section 6.2.1.5
c. General reporting requirements of Section 6.1

5.2.2.1.4 Case 640: Thermostat Setback. Case 640 shall be modeled exactly the same as Case 600 except for changes noted in the subsections below.

5.2.2.1.4.1 Thermostat Control Strategy

5.2.2.1.4.1.1 The thermostat control shall be scheduled as follows:

- From 2300 hours to 0700 hours, Heat = ON IF Temperature < 10°C.
- From 0700 hours to 2300 hours, Heat = ON IF Temperature < 20°C.
- All hours, Cool = ON IF Temperature > 27°C.
- Otherwise, mechanical equipment is OFF.

Informative Note: "Temperature" refers to the conditioned-zone air temperature.

5.2.2.1.4.1.2 A nonproportional thermostat, as specified in Section 5.2.1.13.1.2, shall be used.

5.2.2.1.4.2 Output Requirements. Case 640 requires the following output:

Copyrighted material licensed to Sei Ito on 2020-06-26 for licensee's use only. All rights reserved. No further reproduction or distribution is permitted. Distributed by Techstreet for ASHRAE, www.techstreet.com

Table 5-10 Vent Fan Capacity, Depending on the Presence of Automatic Altitude Adjustment

Vent Fan Capacity Specification (in Addition to Specified Infiltration Rate)	m^3/h	Air Changes per Hour, ach
Input for programs that automatically correct vent fan mass flow for altitude; set altitude to 1609 m above sea level.	1703.16	13.14
Input for programs with fixed assumption that site is at sea level (no automatic correction of fan mass flow).	1400	10.8

a. All non-free-float case output in accordance with Section 6.2.1.1
b. General reporting requirements of Section 6.1

5.2.2.1.5 Case 650: Night Ventilation. Case 650 shall be modeled exactly the same as Case 600 except for changes noted in the subsections below.

5.2.2.1.5.1 Thermostat and Ventilation Fan Control Strategy.

5.2.2.1.5.1.1 The following configuration schedule shall be applied:

- From 1800 hours to 0700 hours, Vent fan = ON
- From 0700 hours to 1800 hours, Vent fan = OFF
- Heating = always OFF
- From 1800 hours to 0700 hours, Cool = OFF
- From 0700 hours to 1800 hours, Cool = ON IF Temperature > 27°C; otherwise, Cool = OFF

Informative Note: "Temperature" refers to the conditioned-zone air temperature.

5.2.2.1.5.1.2 A nonproportional thermostat, as specified in Section 5.2.1.13.1.2, shall be used.

5.2.2.1.5.2 Ventilation Fan Characteristics

a. Vent fan capacity = 1703.16 standard m^3/h (in addition to specified infiltration rate)
b. Waste heat from fan = 0

If the program being tested does not automatically correct for the reduced density of air at altitude, inputs for the fan capacity shall be adjusted as shown in Table 5-10.

Informative Note: The calculation technique used to develop Table 5-10 is provided as background information in Informative Annex B3.

5.2.2.1.5.3 Output Requirements. Case 650 requires the following output:

a. All non-free-float case output in accordance with Section 6.2.1.1
b. General reporting requirements of Section 6.1

5.2.2.2 High-Mass Basic Tests. The high-mass basic tests shall be modeled as detailed in this section and its subsections. These tests include Cases 900 through 960. The first case shall be Case 900. Once an accurate input description for Case 900 has been developed, the remaining high-mass cases, except for Case 960, shall be input by modifying each corresponding 600-series case as indicated case-by-case below. Case 960 (sunspace) shall be based on Case 600 and shall integrate aspects of Case 900 as specified in Section 5.2.2.2.7.

Informative Note: The high-mass cases are the same as the corresponding low-mass 600-series cases except that material properties are taken from Table 5-11 rather than Table 5-1. The wall and floor properties are more massive and the roof properties are unchanged.

5.2.2.2.1 Case 900: High-Mass Base Building. Case 900 shall be modeled exactly the same as Case 600 except for changes noted in the subsections below.

5.2.2.2.1.1 Material Properties. For the exterior walls and floor, the materials specifications of Table 5-11 shall be used in place of the materials specifications of Table 5-1 (see Section 5.2.1.4). The roof materials shall not change for any of the 900-series cases.

5.2.2.2.1.2 Output Requirements. Case 900 requires the following output:

a. All non-free-float case output in accordance with Section 6.2.1.1
b. Additional output specified for Case 900 in Section 6.2.1.8
c. General reporting requirements of Section 6.1

5.2.2.2.2 Case 910: High-Mass South Shading. Case 910 shall be modeled exactly the same as Case 610 except for changes noted in the subsections below.

5.2.2.2.2.1 Material Properties. See the requirements of Section 5.2.2.2.1.1.

5.2.2.2.2.2 Output Requirements. Case 910 requires the following output:

a. All non-free-float case output in accordance with Section 6.2.1.1
b. General reporting requirements of Section 6.1

5.2.2.2.3 Case 920: High-Mass East/West Window Orientation. Case 920 shall be modeled exactly the same as Case 620 except for changes noted in the subsections below.

5.2.2.2.3.1 Material Properties. See the requirements of Section 5.2.2.2.1.1.

5.2.2.2.3.2 Output Requirements. Case 920 requires the following output:

a. All non-free-float case output in accordance with Section 6.2.1.1
b. General reporting requirements of Section 6.1

5.2.2.2.4 Case 930: High-Mass East/West Shading. Case 930 shall be modeled exactly the same as Case 630 except for changes noted in the subsections below.

5.2.2.2.4.1 Material Properties. See the requirements of Section 5.2.2.2.1.1.

5.2.2.2.4.2 Output Requirements. Case 930 requires the following output:

Copyrighted material licensed to Sei Ito on 2020-06-26 for licensee's use only. All rights reserved. No further reproduction or distribution is permitted. Distributed by Techstreet for ASHRAE, www.techstreet.com

Table 5-11 Material Specification Heavyweight Case

Element	k, W/(m·K)	Thickness, m	U, W/(m²·K)	R, m²·K/W	Density, kg/m³	c_p, J/(kg·K)
Heavyweight Case: Exterior Wall (inside to outside)						
Interior surface coefficient			8.290	0.121		
Concrete block	0.510	0.100	5.100	0.196	1400	1000
Foam insulation	0.040	0.0615	0.651	1.537	10	1400
Wood siding	0.140	0.009	15.556	0.064	530	900
Exterior surface coefficient			29.300	0.034		
Total air-air			**0.512**	**1.952**		
Total surf-surf			**0.556**	**1.797**		
Heavyweight Case: Floor (inside to outside)						
Interior surface coefficient [a]			8.290	0.121		
Concrete slab	1.130	0.080	14.125	0.071	1400	1000
Insulation	0.040	1.007	0.040	25.175	0 [b]	0 [b]
Total air-surf			**0.039**	**25.366**		
Total surf-surf			**0.040**	**25.246**		
Heavyweight Case: Roof (inside to outside) [c]						
Interior surface coefficient [a]			8.290	0.121		
Plasterboard	0.160	0.010	16.000	0.063	950	840
Fiberglass quilt	0.040	0.1118	0.358	2.794	12	840
Roofdeck	0.140	0.019	7.368	0.136	530	900
Exterior surface coefficient			29.300	0.034		
Total air-air			**0.318**	**3.147**		
Total surf-surf			**0.334**	**2.992**		
Summary: Heavyweight case						
Component	**Area, m²**	**UA, W/K**				
Wall	63.600	32.580				
Floor	48.000	1.892				
Roof	48.000	15.253				
S. Window	12.000	36.000				
Infiltration		18.440 [d]				
Total UA (with south glass)		**104.165**				
Total UA (without south glass)		**68.165**				
	ach	**Volume, m³**	**Altitude, m**			
	0.500	129.6	1609.0			

a. ***Informative Note:*** The interior film coefficient for floors and ceilings is a compromise between upward and downward heat flow for summer and winter.
b. Underfloor insulation has the minimum density and specific heat the program being tested will allow, but not < 0.
c. ***Informative Note:*** The heavyweight case roof is the same as the lightweight case roof.
d. ***Informative Note:*** UA corresponding to infiltration based on ach × volume × (specific heat of air) × (density of air at specified altitude).

Copyrighted material licensed to Sei Ito on 2020-06-26 for licensee's use only. All rights reserved. No further reproduction or distribution is permitted. Distributed by Techstreet for ASHRAE, www.techstreet.com

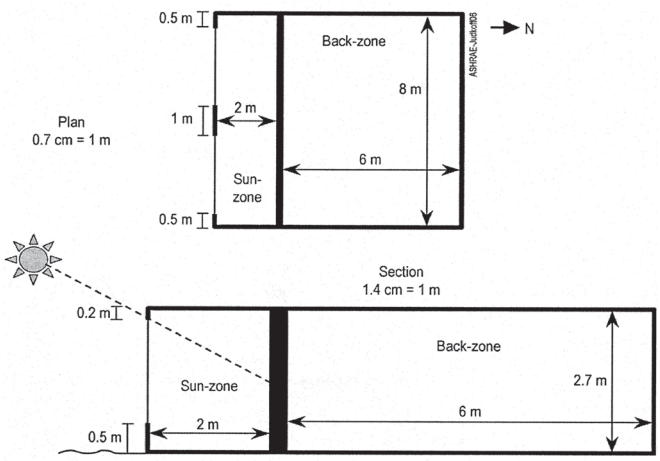

Figure 5-6 Sunspace plan and section (Case 960).

a. All non-free-float case output in accordance with Section 6.2.1.1
b. General reporting requirements of Section 6.1

5.2.2.2.5 Case 940: High-Mass Thermostat Setback. Case 940 shall be modeled exactly the same as Case 640 except that the exterior wall and floor materials specifications of Table 5-11 shall be used in place of the materials specifications of Table 5-1.

5.2.2.2.6 Case 950: High-Mass Night Ventilation. Case 950 shall be modeled exactly the same as Case 650 except that the exterior walls and floor materials specifications of Table 5-11 shall be used in place of the materials specifications of Table 5-1.

5.2.2.2.7 Case 960: Sunspace. Case 960 shall consist of two zones (back zone and sun zone) separated by a common wall (as specified Figure 5-6). The back zone shall be of lightweight construction, and the sun zone shall be of heavyweight construction.

5.2.2.2.7.1 Back Zone

a. The geometric and thermal properties of the back zone shall be exactly the same as for Case 600 except that the south wall and windows are replaced with the common wall.
b. Infiltration in the back zone = 0.5 ach. If the program being tested does not use barometric pressure from weather data or otherwise automatically correct for the change in air density due to altitude, then follow the requirements of Section 5.2.1.6.1.
c. Internal heat generation in the back zone shall be as specified in Section 5.2.1.7.

5.2.2.2.7.2 Sun Zone/Back Zone Common Wall. Material properties of the sun-zone/back-zone common wall specified in Table 5-12 shall be used.

5.2.2.2.7.3 Sun Zone. The sun zone shall be 2 m deep by 8 m wide by 2.7 m high. The back (north) wall of the sun zone shall be the common wall. The south wall of the sun zone shall contain two 6 m^2 windows that shall be the same as the windows in Case 900 except that they are raised 0.3 m higher on the south wall than in Case 900 (as specified in Figure 5-6). The thermal and physical properties of the sun zone shall be the same as Case 900 with the following exceptions:

a. Zone depth shall be 2 m.
b. The north wall shall be replaced by the common wall.
c. The south wall shall have two 3×2 m windows raised 0.3 m higher on the south wall than in Case 900. These windows shall be double-pane and have the same properties as the windows in Case 900.
d. The east and west walls of the sun zone (end walls) shall be 5.4 m^2 each.
e. The air volume of the sun zone shall be 43.2 m^2.
f. Infiltration in the sun zone shall be 0.5 ach. If the program being tested does not use barometric pressure from weather data or otherwise automatically correct for the change in air density due to altitude, then the infiltration rate shall be adjusted according to Section 5.2.1.6.1.
g. Internal heat gains in the sun zone = 0 W.
h. The exact geometric details shall be as shown in Figure 5-6.

5.2.2.2.7.4 Interior Solar Distribution in Sun Zone. If the program being tested does not calculate this effect internally but requires distribution fractions from the user, the use of Table 5-13 shall be permitted. Use of different (nonspecified) values shall not be prohibited if there is a mathematical, physical, or logical basis for applying them. Where different values are used, they shall be applied consistently throughout the test cases. The use of nonspecified values shall be documented in the Standard Output Report (Normative Annex A2).

Informative Note: Table 5-13 presents an approximate calculation of solar distribution fractions adjusted for the geometry of the Case 960 sun zone by assuming that 100% of the incoming radiation strikes the floor first and that all reflections are diffuse. Fractional values for the walls with windows (i.e., the sun zone south wall) include the portion of the solar radiation absorbed by the glass (as it passes back out the window) and conducted back into the zone. Solar radiation absorbed by the glass (and conducted inward) as it initially passes into the building is not included in the values in Table 5-13. Informative Annex B7 gives background information regarding the calculation technique used for developing these solar fractions.

5.2.2.2.7.5 Heating and Cooling Control Strategies

a. The sun zone shall not have a space conditioning system, and the sun zone air temperature shall be allowed to free-float.
b. The back zone shall be controlled the same as for Case 600.

5.2.2.2.7.6 Interzone Mass Transfer. There shall be no mechanical or natural interzone air exchange.

5.2.2.2.7.7 Output Requirements. Case 960 requires the following output:

a. Back zone only, all non-free-float case outputs in accordance with Section 6.2.1.1
b. Sun zone only, all free-float case outputs in accordance with Section 6.2.1.6
c. General reporting requirements of Section 6.1

Copyrighted material licensed to Sei Ito on 2020-06-26 for licensee's use only. All rights reserved. No further reproduction or distribution is permitted. Distributed by Techstreet for ASHRAE, www.techstreet.com

Table 5-12 Thermal and Physical Properties of the Sun-Zone/Back-Zone Common Wall (Case 960)

k, W/(m·K)	Thickness, m	U, W/(m²·K)	R, m²·K/W	Density, kg/m³	c_p, J/(kg·K)	Shortwave Absorptance	Infrared Emittance
0.510	0.20	2.55	0.392	1400	1000	0.6	0.9

Table 5-13 Interior Solar Distribution Fractions by Surface, Case 960, Sun Zone

Surface	Floor	Ceiling	East Wall	West Wall	North Wall	South Wall	Solar Lost through Windows
Solar fraction	0.6	0.06	0.02	0.02	0.2	0.03	0.07

5.2.2.3 Free-Float Cases: Cases 600FF, 650FF, 900FF, and 950FF. If the program being tested has the ability to calculate and output hourly zone air temperatures, the four free-floating cases (600FF, 650FF, 900FF, and 950FF) shall be modeled as detailed in this section and its subsections.

Informative Note: The FF cases are based on their corresponding non-FF cases. For all cases where free-float zone air temperature output is required, the free-float zone air temperature is for the zone air only, assuming well-mixed air with no radiant effects (i.e., equivalent to what would be obtained from a hypothetical aspirated temperature sensor perfectly shielded from solar and infrared radiation).

5.2.2.3.1 Case 600FF. Case 600FF shall be modeled exactly the same as Case 600 except for changes noted in the subsections below.

5.2.2.3.1.1 Mechanical System. There is no mechanical heating or cooling of the building.

5.2.2.3.1.2 Output Requirements. Case 600FF requires the following output:

a. All free-float case output in accordance with Section 6.2.1.6
b. Daily hourly output specified for Case 600FF in Section 6.2.1.8
c. General reporting requirements of Section 6.1

5.2.2.3.2 Case 650FF. Case 650FF shall be modeled exactly the same as Case 650 except for changes noted in the subsections below.

5.2.2.3.2.1 Mechanical System. There is no mechanical heating or cooling of the building. The mechanical venting schedule shall remain as follows:

- From 1800 hours to 0700 hours, vent fan = ON
- From 0700 hours to 1800 hours, vent fan = OFF

Ventilation fan characteristics shall remain as follows:

a. Vent fan capacity = 1703.16 standard m³/h (in addition to specified infiltration rate)
b. Waste heat from fan = 0

If the program being tested does not automatically correct for the reduced density of air at altitude, then the inputs for the fan capacity shall be adjusted as specified in Table 5-10 (see Section 5.2.2.1.5).

5.2.2.3.2.2 Output Requirements. Case 650FF requires the following output:

a. All free-float case output in accordance with Section 6.2.1.6
b. Daily hourly output specified for Case 650FF in accordance with Section 6.2.1.8
c. General reporting requirements of Section 6.1

5.2.2.3.3 Case 900FF. Case 900FF shall be modeled exactly the same as Case 900 except for changes noted in the subsections below.

5.2.2.3.3.1 Mechanical System. There is no mechanical heating or cooling of the building.

5.2.2.3.3.2 Output Requirements. Case 900FF requires the following output:

a. All free-float case output in accordance with Section 6.2.1.6
b. Case 900FF only output in accordance with Section 6.2.1.7
c. Daily hourly output specified for Case 900FF in Section 6.2.1.8
d. General reporting requirements of Section 6.1

5.2.2.3.4 Case 950FF. Case 950FF shall be modeled exactly the same as Case 950 except for changes noted in the subsections below.

5.2.2.3.4.1 Mechanical System. See Section 5.2.2.3.2.1 for requirements.

5.2.2.3.4.2 Output Requirements. Case 950FF requires the following output:

a. All free-float case output in accordance with Section 6.2.1.6
b. Daily hourly output specified for Case 950FF in Section 6.2.1.8
c. General reporting requirements of Section 6.1

5.2.3 In-Depth Tests. The in-depth tests shall be modeled as detailed in this section and the following subsections. The in-depth tests include Cases 195 through 320, 395 through 440, 800, and 810. The proper base case for developing the various in-depth cases, as shown in Table 5-14 and Figure 5-7, shall be used.

The in-depth series tests require only non-free-float case output and general reporting requirements in accordance with Sections 6.2.1.1 and 6.1, respectively.

5.2.3.1 Case 220: In-Depth Series Base Case. Case 220 shall be modeled exactly the same as Case 600 except for the changes specified in the following subsections.

5.2.3.1.1 Infiltration. Infiltration rate = 0 ach, continuously (24 hours per day for the full year).

Copyrighted material licensed to Sei Ito on 2020-06-26 for licensee's use only. All rights reserved. No further reproduction or distribution is permitted. Distributed by Techstreet for ASHRAE, www.techstreet.com

Table 5-14 Base Cases for In-Depth Cases

Case	Basis for that Case	Case	Basis for that Case	Case	Basis for that Case
220	600	250	220	400	600
210	220	270	220	395	400
215	220	280	270	410	400
200	210	290	270	420	410
195	200	300	270	430	420
230	220	310	300	440	600
240	220	320	270	800	430
				810	900

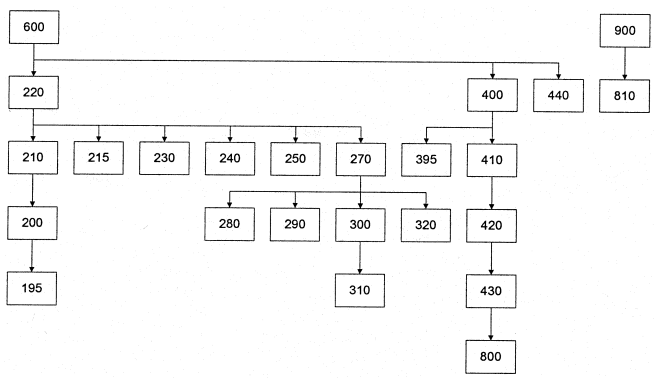

Figure 5-7 Base cases for in-depth cases.

5.2.3.1.2 Internal Gains. Internal gains = 0 W, continuously (24 hours per day for the full year).

5.2.3.1.3 Opaque Surface Radiative Properties. Interior and exterior opaque surface solar (visible and ultraviolet wavelengths) absorptances and infrared emittances shall be applied to all opaque surfaces as specified in Table 5-15.

Where variations to opaque surface radiative properties are specified for other test cases of Section 5.2.3, these variations shall apply to all interior only, exterior only, or interior and exterior opaque surfaces, as specified for a given test case. Where a test case includes a high-conductance wall/opaque window, variation of the opaque surface radiative properties shall also be applied there as specified for a given test case.

Informative Note: Listed infrared emittances are unchanged from Case 600.

5.2.3.1.4 High-Conductance Wall/Opaque Window. An element that is either a highly conductive wall or an opaque window shall replace the 12 m^2 of transparent window on the south wall.

The properties of the high-conductance wall shall be as follows:

a. Shortwave transmittance = 0.
b. Infrared emittances and solar absorptances provided in Table 5-15 shall be used.
c. The exterior surface coefficient is in accordance with Section 5.2.1.9 (Case 600); if combined coefficients are applied, then 21.0 W/(m^2·K) shall be used. The surface texture for the high-conductance wall shall be very smooth, the same as glass.
d. The interior surface coefficient shall be in accordance with Section 5.2.1.10 (Case 600).
e. Conductance, density, specific heat, and surface texture (very smooth) shall be the same as for the transparent window listed in Table 5-16.

Table 5-15 Opaque Surface Radiative Properties, Case 220

	Interior Surface	Exterior Surface
Solar absorptance	N/A	0.1
Infrared emittance	0.9	0.9

N/A = not applicable

5.2.3.1.5 Thermostat Control

5.2.3.1.5.1 The following "20,20" thermostat control configuration shall be used:

- Heat = ON IF Temperature < 20°C
- Cool = ON IF Temperature > 20°C

Informative Note: "Temperature" refers to the conditioned-zone air temperature.

5.2.3.1.5.2 The thermostat shall be nonproportional as specified in Section 5.2.1.13.1.2.

5.2.3.1.6 Output Requirements. Case 220 requires the following output:

a. Non-free-float case output in accordance with Section 6.2.1.1
b. General reporting requirements of Section 6.1

5.2.3.2 Case 210: Interior Infrared Radiation. Case 210 shall be modeled exactly the same as Case 220 except for changes specified in the following subsections.

5.2.3.2.1 Opaque Surface Radiative Properties. Interior infrared emittance = 0.1.

5.2.3.2.2 Interior Combined Radiative and Convective Surface Coefficients. If the program being tested calculates interior surface radiation and convection, skip the instructions in this section. If the program being tested does not calculate these effects, the constant combined radiative

Copyrighted material licensed to Sei Ito on 2020-06-26 for licensee's use only. All rights reserved. No further reproduction or distribution is permitted. Distributed by Techstreet for ASHRAE, www.techstreet.com

Table 5-16 High-Conductance Wall Properties

Property	Value
Number of opaque panes	2
Opaque pane thickness	3.175 mm
Thermal conductivity of opaque pane	1.06 W/(m·K)
Conductance of each opaque pane	333 W/(m^2·K) [R-0.003 m^2·K/W]
Density of opaque pane	2500 kg/m^3
Specific heat of opaque pane	750 J/(kg·K)
Combined radiative and convective heat transfer coefficient of air gap between opaque panes	6.297 W/(m^2·K) [R-0.1588 m^2·K/W]
Air gap thickness	13 mm

Table 5-17 Interior Combined Surface Coefficient Versus Surface Orientation, Case 210

Orientation of Surface and Heat Flow	Interior Combined Surface Coefficient
Horizontal heat transfer on vertical surfaces	3.73 W/(m^2·K)
Upward heat transfer on horizontal surfaces	4.70 W/(m^2·K)
Downward heat transfer on horizontal surfaces	1.57 W/(m^2·K)

Table 5-18 Exterior Combined Surface Coefficient Versus Surface Texture, Case 215

Surface Texture	Exterior Combined Surface Coefficient
Brick or rough plaster (all walls and roofs)	25.2 W/(m^2·K)
High-conductance wall	16.9 W/(m^2·K)

Informative Note: All values in this table are based on a mean annual wind speed of 4.02 m/s.

and convective surface coefficients given in Table 5-17 shall be used.

If the program being tested does not allow scheduling of these coefficients, 3.73 W/(m^2·K) shall be used for horizontal surfaces. Use of different (nonspecified) values shall not be prohibited if there is a mathematical, physical, or logical basis for applying them. Where different values are used, they shall be applied consistently throughout the test cases. Use of nonspecified values shall be documented in the Standard Output Report specified in Normative Annex A2.

For cases with an infrared emittance of 0.1, a radiative portion of 0.57 W/(m^2·K) shall be permitted for these combined coefficients.

Informative Note: Informative Annex B5 includes background information about combined radiative and convective film coefficients.

5.2.3.3 Case 215: Exterior Infrared Radiation. Case 215 shall be modeled exactly the same as Case 220 except for changes specified in the following subsections.

5.2.3.3.1 Opaque Surface Radiative Properties. Exterior infrared emittance = 0.1.

5.2.3.3.2 Exterior Combined Radiative and Convective Surface Coefficients. If the program being tested calculates exterior surface radiation and convection automatically, skip the instructions in this section. If the program being tested does not calculate this effect, the coefficients given in Table 5-18 shall be used.

Informative Note: The calculation technique used to develop Table 5-18 is provided as background information in Informative Annex B4. A calculation technique that may be used for comparing combined surface coefficients as a function of infrared emittance is provided as background information in Informative Annex B5.

5.2.3.4 Case 200 Surface Convection/Infrared Radiation. Case 200 shall be modeled exactly the same as Case 210 except for changes specified in the following subsections.

5.2.3.4.1 Opaque Surface Radiative Properties. Exterior infrared emittance = 0.1.

5.2.3.4.2 Exterior Combined Radiative and Convective Surface Coefficients. See Section 5.2.3.3.2 for requirements.

5.2.3.5 Case 195: Solid Conduction Test. Case 195 shall be modeled exactly the same as Case 200 except that the 12 m^2 of high-conductance windows shall be replaced with the lightweight exterior walls with thermal and material properties as specified in Table 5-1 (see Section 5.2.1.4). These walls shall have a rough exterior surface and shall have surface radiative properties and associated surface coefficients as specified for the lightweight exterior walls of Case 200.

5.2.3.6 Case 230: Infiltration. Case 230 shall be modeled exactly the same as Case 220 except that the infiltration rate shall be 1.0 ach, continuously (24 hours per day for the full year). The infiltration rate shall be independent of wind speed, indoor/outdoor temperature difference, or other variables.

The weather data file represents a high-altitude site with an elevation of 1609 m above sea level. If the program being tested does not use barometric pressure from the weather data or otherwise automatically correct for the change in air density due to altitude, then the specified infiltration rates shall be adjusted to yield mass flows equivalent to those occurring at the specified altitude as shown in Table 5-19.

Copyrighted material licensed to Sei Ito on 2020-06-26 for licensee's use only. All rights reserved. No further reproduction or distribution is permitted. Distributed by Techstreet for ASHRAE, www.techstreet.com

Table 5-19 Infiltration Rates Depending on the Presence of Automatic Altitude Adjustment, Case 230

Altitude Adjustment Algorithm	Input Air Changes per Hour, ach	Adjustment Factor
Programs with automatic altitude adjustment; set altitude to 1609 m above sea level	1.0	1.0
Programs with fixed assumption that site is at sea level (no automatic adjustment)	0.822	0.822 [a]

a. (Specified Rate) × 0.822 = (Altitude adjusted rate)

Table 5-20 Interior Solar Distribution Fractions by Surface, Case 270

Surface	Floor	Ceiling	East Wall	West Wall	North Wall	South Wall	Solar Lost through Windows
Solar fraction	0.903	0.039	0.013	0.013	0.018	0.008	0.006

Table 5-21 Interior Solar Distribution Fractions by Surface, Case 280

Surface	Floor	Ceiling	East Wall	West Wall	North Wall	South Wall	Solar Lost through Windows
Solar fraction	0.244	0.191	0.057	0.057	0.082	0.065	0.304

Informative Note: Air density at 1609 m altitude is roughly 80% of that at sea level. The calculation technique used to develop Table 5-19 is provided as background information in Informative Annex B3.

5.2.3.7 Case 240: Internal Gains. Case 240 shall be modeled exactly the same as Case 220 except for the following changes to internal gains:

- Internal gains = 200 W, continuously (24 hours per day for the full year)
- Internal gains are 100% sensible, 0% latent
- Internal gains are 60% radiative, 40% convective

Informative Note: Internally generated sensible and latent internal gains are assumed to be distributed evenly throughout the zone air. These are internally generated sources of heat (from equipment, lights, people, animals, etc.) that are not related to heating, ventilating, and air conditioning (HVAC).

5.2.3.8 Case 250: Exterior Shortwave Absorptance. Case 250 shall be modeled exactly the same as Case 220, except that exterior shortwave absorptance = 0.9.

5.2.3.9 Case 270: South Solar Gains. Case 270 shall be modeled exactly the same as Case 220 except for the changes specified in the following subsections.

5.2.3.9.1 Opaque Surface Radiative Properties. Interior shortwave absorptance = 0.9.

5.2.3.9.2 Transparent Window. The 12 m^2 of high-conductance walls on the south walls shall be windows as in Case 600. Window geometry shall be as shown in Figure 5-1 (see Section 5.2.1.3), and window thermal and optical properties shall be as shown in Section 5.2.1.11. Exterior and interior surface radiation and convection for windows are as specified in Sections 5.2.1.9 and 5.2.1.10, respectively.

5.2.3.9.3 Interior Solar Distribution. If the program being tested does not calculate interior solar distribution internally but requires distribution fractions from the user, the use of Table 5-20 shall be permitted. Use of different (nonspecified) values shall not be prohibited if there is a mathematical, physical, or logical basis for applying them. Where different values are used, they shall be applied consistently throughout the test cases. The use of nonspecified values shall be documented in the Standard Output Report (see Normative Annex A2).

Informative Note: Table 5-20 presents an approximate calculation of solar distribution fractions corresponding to the interior solar absorptance for Case 270 by assuming that 100% of the incoming radiation strikes the floor first and that all reflections are diffuse. Fractional values for the walls with windows (i.e., the south wall) include the portion of the solar radiation absorbed by the glass (as it passes back out the window) and conducted back into the zone. Solar radiation absorbed by the glass (and conducted inward) as it initially passes into the building is not included in the values in Table 5-20. Informative Annex B7 gives background information regarding the calculation technique used for developing these solar fractions.

5.2.3.10 Case 280: Cavity Albedo. Case 280 shall be modeled exactly the same as Case 270 except for changes specified in the following subsections.

5.2.3.10.1 Opaque Surface Radiative Properties. Interior shortwave absorptance = 0.1.

5.2.3.10.2 Interior Solar Distribution. If the program being tested does not calculate interior solar distribution internally but requires distribution fractions from the user, then the use of Table 5-21 shall be permitted. Use of different (nonspecified) values shall not be prohibited if there is a mathematical, physical, or logical basis for applying them. Where different values are used, they shall be applied consistently throughout the test cases. The use of nonspecified values shall be documented in the Standard Output Report (see Normative Annex A2).

Informative Note: Table 5-21 presents an approximate calculation of solar distribution fractions corresponding to the interior solar absorptance of Case 280 by assuming that 100%

Copyrighted material licensed to Sei Ito on 2020-06-26 for licensee's use only. All rights reserved. No further reproduction or distribution is permitted. Distributed by Techstreet for ASHRAE, www.techstreet.com

Table 5-22 Interior Solar Distribution Fractions by Surface, Case 300

Surface	Floor	Ceiling	East Wall	West Wall	North Wall	South Wall	Solar Lost through Windows
Solar fraction	0.903	0.039	0.008	0.008	0.018	0.018	0.006

of the incoming radiation strikes the floor first and that all reflections are diffuse. Fractional values for the walls with windows (i.e., the south wall) include the portion of the solar radiation absorbed by the glass (as it passes back out the window) and conducted back into the zone. Solar radiation absorbed by the glass (and conducted inward) as it initially passes into the building is not included in the values in Table 5-21. Informative Annex B7 gives background information regarding the calculation technique used for developing these solar fractions.

5.2.3.11 Case 290: South Shading. Case 290 shall be modeled exactly the same as Case 270 except that the overhang detailed in Figure 5-2 (Section 5.2.2.1.1.1) is added. The horizontal overhang for south-facing windows shall extend across the entire length of the south wall.

5.2.3.12 Case 300: East/West Window Orientation. Case 300 shall be modeled exactly the same as Case 270 except for changes specified in the following subsections.

5.2.3.12.1 Window Orientation. The window orientation shall be modified as detailed in Figure 5-3 (Section 5.2.2.1.2.1) such that 6 m^2 of window area face east and 6 m^2 of window area face west and there are no other windows. Other than the change in orientation, the windows shall be exactly as in Case 270.

5.2.3.12.2 Interior Solar Distribution. If the program being tested does not calculate this effect internally but requires distribution fractions from the user, the use of Table 5-22 shall be permitted. Use of different (nonspecified) values shall not be prohibited if there is a mathematical, physical, or logical basis for applying them. Where different values are used, they shall be applied consistently throughout the test cases. The use of nonspecified values shall be documented in the Standard Output Report (see Normative Annex A2).

Informative Note: Table 5-22 presents an approximate calculation of solar distribution fractions adjusted for the geometry of Case 300 by assuming that 100% of the incoming radiation strikes the floor first and that all reflections are diffuse. Fractional values for the walls with windows (i.e., the east and west walls) include the portion of the solar radiation absorbed by the glass (as it passes back out the window) and conducted back into the zone. Solar radiation absorbed by the glass (and conducted inward) as it initially passes into the building is not included in the values in Table 5-22. Informative Annex B7 gives background information regarding the calculation technique used for developing these solar fractions.

5.2.3.13 Case 310: East/West Shading. Case 310 shall be modeled exactly the same as Case 300 except that shading devices are added to the east and west windows as detailed in Figures 5-4 and 5-5 (Section 5.2.2.1.3.1).

5.2.3.14 Case 320: Thermostat. Case 320 shall be modeled exactly the same as Case 270 except for the changes specified in the following subsections.

5.2.3.14.1 The thermostat shall have the following 20,27 deadband configuration:

- Heat = ON IF Temperature < 20°C; otherwise, Heat = OFF
- Cool = ON IF Temperature > 27°C; otherwise, Cool = OFF

Informative Note: "Temperature" refers to the conditioned-zone air temperature.

5.2.3.14.2 The thermostat shall be nonproportional as specified in Section 5.2.1.13.1.2.

5.2.3.15 Case 400: Opaque Windows with Deadband Thermostat. Case 400 shall be modeled exactly the same as Case 600 except for the changes specified in the following subsections.

5.2.3.15.1 Infiltration. Infiltration rate = 0 ach, continuously (24 hours per day for the entire year).

5.2.3.15.2 Internal Gains. Internal gains = 0 W, continuously (24 hours per day for the entire year).

5.2.3.15.3 Opaque Surface Radiative Properties. Exterior solar absorptance = 0.1.

5.2.3.15.4 High-Conductance Wall/Opaque Window. An element that is either a highly conductive wall or an opaque window shall replace the 12 m^2 of transparent window on the south wall.

The properties of the high-conductance wall shall be as follows:

a. Shortwave transmittance = 0.
b. Interior and exterior infrared emittances = 0.9.
c. Exterior solar absorptance = 0.1; interior solar absorptance is not applicable.
d. The exterior surface coefficient shall be in accordance with Section 5.2.1.9 (Case 600); if combined coefficients are applied, 21.0 W/(m^2·K) shall be used. The surface texture for the high-conductance wall shall be very smooth, the same as glass.
e. The interior surface coefficient shall be in accordance with Section 5.2.1.10 (Case 600).
f. Conductance, density, specific heat, and surface texture (very smooth) shall be the same as for Case 220 as listed in Table 5-16 (Section 5.2.3.1.4).

5.2.3.15.5 Output Requirements. Case 400 requires the following output:

a. Non-free-float case output in accordance with Section 6.2.1.1
b. General reporting requirements of Section 6.1

5.2.3.16 Case 395: Solid Conduction Test. Case 395 shall be modeled exactly the same as Case 400 except that the 12 m^2 of high-conductance windows shall be replaced with the lightweight exterior walls that shall have thermal and material properties specified in Table 5-1 (see Section

Copyrighted material licensed to Sei Ito on 2020-06-26 for licensee's use only. All rights reserved. No further reproduction or distribution is permitted. Distributed by Techstreet for ASHRAE, www.techstreet.com

5.2.1.4). These walls shall have a rough exterior surface and shall have surface radiative properties and associated surface coefficients as specified for the lightweight exterior walls of Case 400.

5.2.3.17 Case 410: Infiltration. Case 410 shall be modeled exactly the same as Case 400 except that infiltration rate = 0.5 ach, continuously (24 hours per day for the full year).

If the program being tested does not use barometric pressure from weather data or otherwise automatically correct for the change in air density due to altitude, the infiltration rate shall be adjusted as specified in Section 5.2.1.6.1.

5.2.3.18 Case 420: Internal Gains. Case 420 shall be modeled exactly the same as Case 410 except for the following changes to internal gains:

- Internal gains = 200 W, continuously (24 hours per day for the full year)
- Internal gains are 100% sensible, 0% latent
- Internal gains are 60% radiative, 40% convective

Informative Note: Internally generated sensible and latent internal gains are assumed to be distributed evenly throughout the zone air. These are internally generated sources of heat (from equipment, lights, people, animals, etc.) that are not related to heating, ventilating, and air conditioning (HVAC).

5.2.3.19 Case 430: Exterior Shortwave Absorptance. Case 430 shall be modeled exactly the same as Case 420 except that exterior shortwave absorptance = 0.6.

5.2.3.20 Case 440: Cavity Albedo. Case 440 shall be modeled exactly the same as Case 600 except for changes specified in the following subsections.

5.2.3.20.1 Opaque Surface Radiative Properties. Interior shortwave absorptance = 0.1.

5.2.3.20.2 Interior Solar Distribution. Interior solar distribution shall be as specified in Section 5.2.3.10.2 (Case 280).

5.2.3.20.3 Output Requirements. Case 440 requires the following output:

a. Non-free-float case output in accordance with Section 6.2.1.1
b. General reporting requirements of Section 6.1

5.2.3.21 Case 800: High-Mass without Solar Gains. Case 800 shall be modeled exactly the same as Case 430 except as follows. The exterior wall and floor materials specifications of Table 5-11 (Section 5.2.2.2.1.1) shall be used in place of the materials specifications of Table 5-1 (Section 5.2.1.4). The roof materials shall not change, and the high-conductance walls shall also remain as in Case 430.

5.2.3.22 Case 810: High-Mass Cavity Albedo. Case 810 shall be modeled exactly the same as Case 900 except for changes specified in the following subsections.

5.2.3.22.1 Opaque Surface Radiative Properties. Interior shortwave absorptance = 0.1.

5.2.3.22.2 Interior Solar Distribution. Interior solar distribution is in accordance with Section 5.2.3.10.2 (Case 280).

5.2.3.22.3 Output Requirements. Case 810 requires the following output:

a. Non-free-float case output in accordance with Section 6.2.1.1.
b. General reporting requirements of Section 6.1.

5.2.4 Ground-Coupled Slab-on-Grade Analytical Verification Tests

5.2.4.1 "b"-Series Cases. The "b"-series cases shall be modeled as specified in this section. Case GC30b shall be the first case modeled, and all other tests in this series shall be sequential revisions to a previously completed model. The base-case models for each case shall be as follows:

Case	Basis for Case
GC40b	GC30b
GC45b	GC40b
GC50b	GC40b
GC55b	GC40b
GC60b	GC30b
GC65b	GC60b
GC70b	GC40b
GC80b	GC40b

Informative Note: The "b"-series cases are for mid-level-detailed and simplified models likely to be used in whole-building energy simulation programs. If the program being tested can run the "a"-series cases as they are described (see Section 5.2.4.2), run the "a"-series cases before running any of the other cases of Section 5.2.4.

Informative Note: The bulk of the work of implementing the test cases is assembling an accurate base case. It is recommended to double check the Case GC30b base-case inputs and to diagnose Case GC30b results disagreements before proceeding to the other test cases.

5.2.4.1.1 Case GC30b—"b"-Series Steady-State Base Case. Case GC30b shall be modeled as specified in this section and its subsections.

Informative Note: **Objective of the Test Case:** Compare steady-state heat-flow results from whole-building simulation programs to the verified numerical model results (secondary mathematical truth standard).

Informative Note: **Method of the Test Case:** This case drives floor conduction based on the temperature difference between zone air and ambient air (and deep-ground boundary condition) using an adiabatic zone, except for the floor (so that zone load should equal floor conduction), with an adiabatic wall/ground interface boundary (see Figure 5-8) and interior and exterior air temperatures with high convective surface coefficients. High convective surface coefficients

Copyrighted material licensed to Sei Ito on 2020-06-26 for licensee's use only. All rights reserved. No further reproduction or distribution is permitted. Distributed by Techstreet for ASHRAE, www.techstreet.com

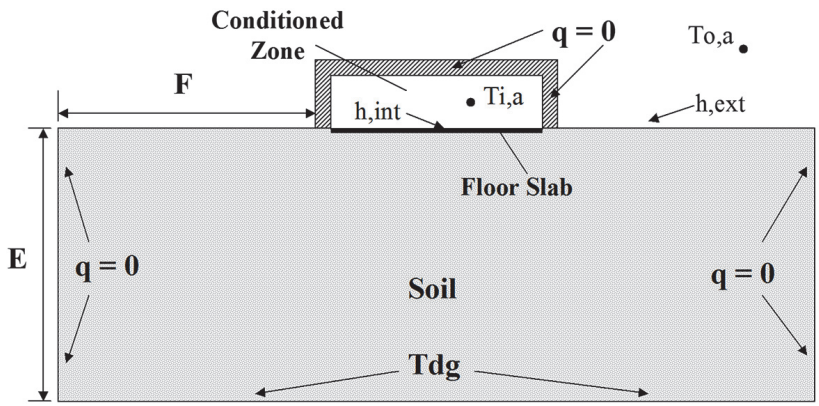

Figure 5-8 Case GC30b conceptual schematic diagram, including boundary conditions and soil dimensions.

facilitate robust floor conduction and establish somewhat uniform temperatures for the interior slab surface and exterior ground surfaces. Soil and far-field boundary conditions are also described. These boundary conditions are allowed by more whole-building simulation programs than those of Case GC10a or Case GC30a. Comparison of GC30b versus GC30a (GC30b – GC30a) checks the sensitivity to high convective surface coefficients versus direct-input constant and uniform surface temperature boundary conditions.

5.2.4.1.1.1 Geometry and General Description. Geometry and location of boundary conditions shall be modeled as described in Figures 5-8 and 5-9. Interior edges of zone walls shall begin at the edges of the surface defined by the area $B \times L$ in Figure 5-9. The slab edge detail shall be modeled as described in Figure 5-10. Parameters related to these figures and other input parameters described in Table 5-23 and the following sections shall be used.

5.2.4.1.1.2 Soil and Slab Thermal Properties and Boundary Conditions

a. The soil and floor slab properties shall be constant and equal to the following:

   Thermal conductivity = 1.9 W/(m·K) (1.098 Btu/[h·ft·°F]).
   Density = 1490 kg/m^3 (93.125 lb/ft^3).
   Specific heat = 1800 J/(kg·K) (0.4302 Btu/[lb°F]).

b. Initially (time < 0) the ground and slab shall be 10°C (50°F) throughout. ***Informative Note:*** At the beginning of the simulation (time = 0), the zone air temperature steps to 30°C (86°F) per Section 5.2.4.1.1.5, and slab and soil temperatures begin to change accordingly.
c. No surface radiation exchange. ***Informative Note:*** One possible method to disable radiation exchange is to set exterior solar absorptances and infrared emittances to 0, or as low as the program being tested allows (e.g., 0.000001).
d. The ground is not shaded except by the building. ***Informative Note:*** Shading and orientation are not relevant with radiative exchange disabled.
e. The ground surface shall be uniform and flat.
f. Interior floor slab and outdoor ground surfaces are level with each other.
g. Models requiring input of slab thickness shall use the least thickness that the software allows and that results in a stable calculation.
h. Models requiring input for below-grade foundation walls shall use the soil thermal properties specified above for the foundation wall, with foundation wall dimensions as small as the model being tested allows and that results in a stable calculation.
i. Deep-ground temperature shall be constant and uniform at the given depth.
j. Far-field ground conditions shall be adiabatic for vertical planes penetrating the ground at the given far-field distance from the surface.
k. Ambient air temperature shall be uniform (well-mixed air).
l. Evapotranspiration shall not be modeled. If the program being tested is capable of modeling evapotranspiration, it shall be turned OFF or reduced to the lowest level allowed by the program.

5.2.4.1.1.3 Above-Grade Construction

a. Building height = 2.7 m (8.858 ft).
b. Zone air volume = 388.8 m^3 (13730 ft^3).
c. All surfaces of the zone except the floor are adiabatic (thermal conductance = 0 W/[m^2·K] [0 Btu/(h·ft^2·°F)]). If the program being tested does not allow adiabatic surfaces, the lowest thermal conductance the program allows shall be used. ***Informative Note:*** For example, thermal conductance = 0.000001 W/(m^2·K) is a sufficiently small value.
d. All surfaces except the floor are massless. If the program being tested does not allow massless surfaces, the lowest density or thermal capacitance, or both, that the program allows shall be used. ***Informative Note:*** For example, density = 0.000001 kg/m^3 (0.0000001 lb/ft^3) or thermal capacitance = 0.000001 J/(kg·K) (0.000001 Btu/[lb·°F]), or both, are sufficiently small values.
e. The adiabatic walls shall contact, but not penetrate, the ground. Heat shall not flow between the ground and the adiabatic walls. ***Informative Note:*** Heat may flow within the ground just below the adiabatic walls.

Copyrighted material licensed to Sei Ito on 2020-06-26 for licensee's use only.
All rights reserved. No further reproduction or distribution is permitted. Distributed by Techstreet for ASHRAE, www.techstreet.com

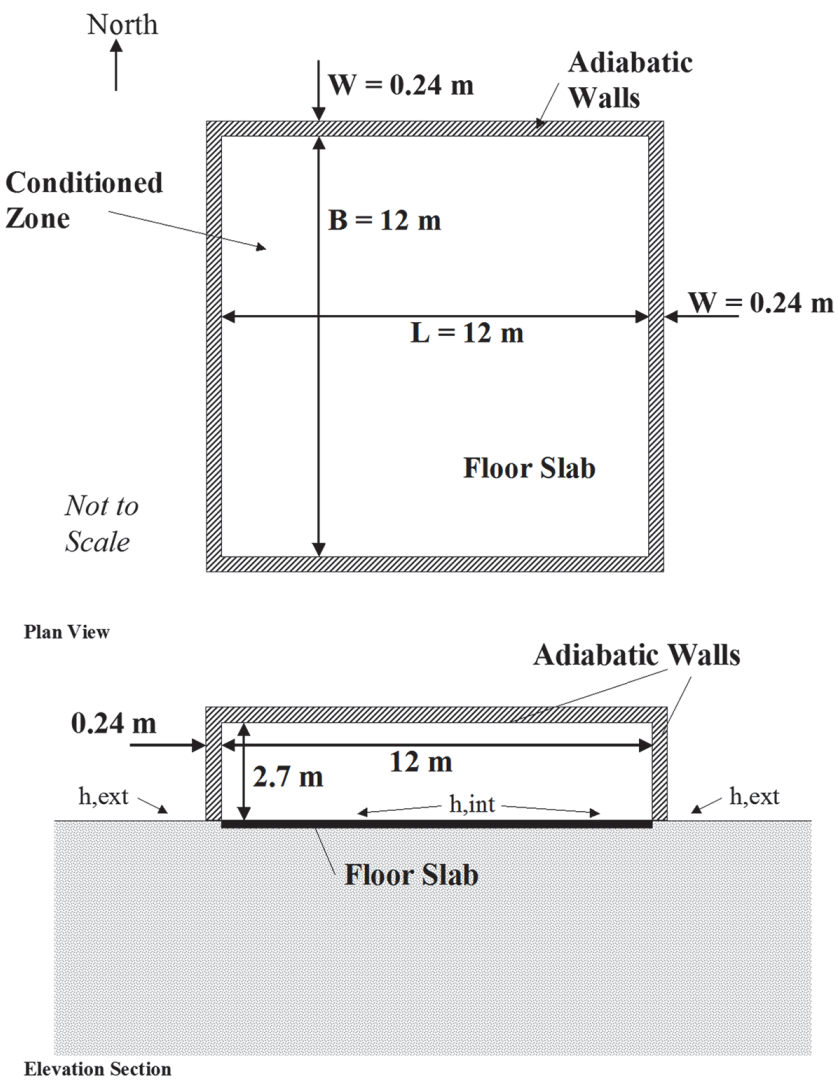

Figure 5-9 Case GC30b floor slab and conditioned zone adiabatic wall dimensions.

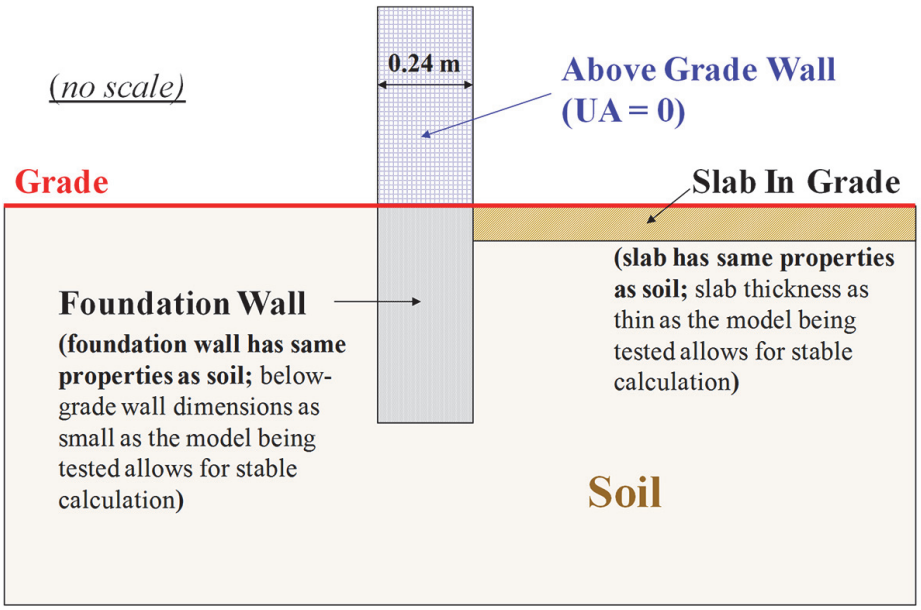

Figure 5-10 Case GC30b slab edge detail.

Copyrighted material licensed to Sei Ito on 2020-06-26 for licensee's use only.
All rights reserved. No further reproduction or distribution is permitted. Distributed by Techstreet for ASHRAE, www.techstreet.com

Table 5-23 Case GC30b Input Parameters

Test Parameters	SI	I-P
Slab length *L*	12 m	39.37 ft
Slab width *B*	12 m	39.37 ft
Wall thickness *W*	0.24 m	0.7874 ft
Inside zone air temperature *Ti,a*	30°C	86°F
Outdoor air temperature *To,a*	10°C	50°F
Deep-ground temperature *Tdg*	10°C	50°F
Deep-ground boundary depth *E*	15 m	49.21 ft
Far-field boundary distance *F*	15 m	49.21 ft

f. Surface radiation exchange shall not be modeled. ***Informative Note:*** One possible method to disable radiation exchange is to set interior and exterior solar absorptances and infrared emittances to 0, or as low as the program being tested allows (e.g., 0.000001).
g. No windows.
h. No infiltration or ventilation.
i. No internal gains.

5.2.4.1.1.4 Convective Surface Coefficients

a. Interior convective surface coefficients *h,int* = 100 W/(m^2·K) (17.61 Btu/[h·ft^2·°F])
b. Exterior convective surface coefficients *h,ext* = 100 W/(m^2·K) (17.61 Btu/[h·ft^2·°F])

These values shall apply to surface coefficients for the floor, adiabatic surfaces, and exterior ground surface. If the program being tested cannot model these convective surface coefficients, the largest value the program allows shall be used.

If the program being tested allows direct user input of convective surface coefficients and surface infrared (IR) emittances, skip the remainder of this paragraph and proceed to Section 5.2.4.1.1.5. If the program being tested allows only direct user input of combined surface coefficients, set that value to 100 W/(m^2·K) (17.61 Btu/[h·ft^2·°F]). If the program being tested does not allow direct user input of convective surface coefficients or combined surface coefficients, input a value for IR emittance such that an equivalent value for combined surface coefficient of 100 W/(m^2·K) (17.61 Btu/[h·ft^2·°F]) is obtained as closely as the program being tested is capable of based on the convective surface coefficient that the program being tested automatically calculates.

5.2.4.1.1.5 Mechanical System. The mechanical system shall provide sensible heating only (no cooling). The system shall be modeled as follows, as closely as the program being tested allows:

a. Heating set point = ON if Temperature < 30°C (86°F); otherwise Heat = OFF.
b. Cooling set point = always OFF.
c. The heating system capacity shall be large enough to maintain the zone air temperature set point. ***Informative Notes:*** (1) For example, 1000 kW (3412 kBtu/h). (2) This specification for the heating capacity is repeated for steady-state cases where floor conduction of the verified numerical models is greater for the given case than for its designated base case.
d. Uniform zone air temperature (well-mixed air).
e. 100% efficiency.
f. 100% convective air system.
g. Ideal controls with the zone air temperature always at the thermostat set point. ***Informative Note:*** For example, assume the heat addition rate equals the equipment capacity (nonproportional control) and there is continuous ON/OFF cycling within the hour as needed.
h. The thermostat shall sense the zone air temperature only. ***Informative Note:*** The purpose of this idealized heating system is to give results for energy consumption that are equal to the sensible heating load.

5.2.4.1.1.6 Weather Data. The constant temperature TMY2 format weather data provided with the following file, included on the accompanying electronic media, shall be used: GC30b.TM2.

If the program does not utilize site data from the weather data file, the site parameters provided in Normative Annex A1, Section A1.1.2 shall be used.

Informative Note: Supporting details for this weather data are provided in Normative Annex A1, Section A1.1.2. Other cases call for different weather files as needed.

5.2.4.1.1.7 Modeling Precision

5.2.4.1.1.7.1 Simulation Duration. The simulation shall be run until there is ≤0.1% variation between the floor-slab conduction for the last hour of the last year of the simulation and the last hour of the preceding year of the simulation. If the software being tested is not capable of this, the simulation duration shall be for as long as the software being tested is capable of running.

Informative Note: **Thermal Node Mesh:** If the numerical model being tested allows variation of thermal node meshing, it is recommended to demonstrate for a subset of the steady-state and steady-periodic cases (e.g., GC30b, GC40b, and others if desired) that the tested mesh detail yields negligible (≤0.1%) change in results versus a less detailed mesh, or that the mesh is as detailed as possible for the available computing hardware.

Informative Note: **Convergence Tolerance:** If the software being tested allows user specification of convergence tolerance, it is recommended to demonstrate for a subset of the steady-state and steady-periodic cases (e.g., GC30b and GC40b) that the current level of heat-flow or temperature convergence tolerance yields negligible (≤0.1%) change in results versus the next-finer convergence tolerance.

5.2.4.1.1.8 Output Requirements. Output shall be provided in accordance with Section 6.2.2.1.

5.2.4.1.2 Case GC40b—Harmonic Variation of Ambient Temperature. Case GC40b shall be modeled as specified in this section.

Informative Note: **Objective of the Test Case:** Compare heat-flow results for approximate steady-periodic (harmonic) variation of ambient temperature *To,a* from whole-building simulation programs versus verified numerical model results. Analyze the phase shift between variations of heat flow and ambient air temperature.

Copyrighted material licensed to Sei Ito on 2020-06-26 for licensee's use only. All rights reserved. No further reproduction or distribution is permitted. Distributed by Techstreet for ASHRAE, www.techstreet.com

Informative Note: **Method of the Test Case:** This case is similar to Case GC30b but uses harmonically varying *To,a*. Hourly TMY2 format weather data are provided for approximating a sinusoidal annual cycle of varying daily average temperatures with a sinusoidal diurnal temperature cycle overlaid (a high-frequency cycle overlaid on a low-frequency cycle). Comparing GC40b with GC30b (GC40b – GC30b) annual hourly average floor conduction checks the sensitivity of average floor heat loss of the harmonic condition versus the steady-state condition.

5.2.4.1.2.1 Input Specification. This case shall be modeled exactly as Case GC30b except for the following changes:

a. **Weather Data.** The weather data provided with the following file, included on the accompanying electronic media, shall be used: GC40b.TM2.

   If the program does not utilize site data from the weather data file, the site parameters provided in Normative Annex A1, Section A1.1.2 shall be used. ***Informative Note:*** These data are described in Normative Annex A1, Section A1.1.2; see Section A1.1.2.1 regarding harmonically varying inputs.

b. **Heating System Capacity.** The heating system capacity shall be set so there is at least enough capacity to maintain the zone air temperature set point during the peak heating-load hour. ***Informative Note:*** The heating capacity may vary among the test cases. This specification for the heating capacity is repeated for harmonically varying cases where floor conduction of the verified numerical models is greater for the given case than for its designated base case.

c. **Simulation Duration.** The simulation shall be run until there is ≤0.1% variation between the annual floor slab conduction for the last year of the simulation and the preceding year of the simulation. If the software being tested is not capable of this, the simulation duration shall be for as long as the software being tested is capable of running.

5.2.4.1.2.2 Output Requirements. Output shall be provided in accordance with Section 6.2.2.2.

5.2.4.1.3 Case GC45b—Aspect Ratio. Case GC45b shall be modeled as specified in this section.

Informative Note: **Objective of the Test Case:** Test the sensitivity to variation of aspect ratio (AR) in the context of steady-periodic (harmonic) variation of *To,a*. The AR for a given slab area directly affects the ratio of perimeter heat transfer to core heat transfer. In this context the use of the term "perimeter" is different from the perimeter boundary described in Case GC10a. Here, perimeter heat transfer is the heat transfer driven by the zone-to-ambient air temperature difference through a relatively thin layer of soil; core heat transfer is driven by the zone-to-deep-ground-temperature difference, through a relatively thick layer of soil.

Informative Note: **Method of the Test Case:** This case is similar to Case GC40b. It uses a slab with the same surface area but different AR. Comparison of results for GC45b versus GC40b (GC45b – GC40b) checks the sensitivity of AR. Compare heat-flow results from whole-building simulation programs to verified numerical model results. Analyze phase shift between variations of heat flow and *To,a*.

Table 5-24 Case GC45b Slab Dimensions

Test Parameters	SI	I-P
Slab length *L*	36 m	118.11 ft
Slab width *B*	4 m	13.12 ft

5.2.4.1.3.1 Input Specification. This case shall be modeled exactly as Case GC40b except for the following changes:

a. **Slab Dimensions.** The slab dimensions shall be modeled as specified in Table 5-24.
b. **Heating System Capacity.** The heating system capacity shall be modeled as needed so that there is at least enough capacity to maintain the zone air temperature set point during the peak heating-load hour.

5.2.4.1.3.2 Output Requirements. Output shall be provided in accordance with Section 6.2.2.2 except that slab dimensions *L* and *B* from Table 5-24 shall be used.

5.2.4.1.4 Case GC50b—Large Slab. Case GC50b shall be modeled as specified in this section.

Informative Note: **Objective of the Test Case:** Test the sensitivity to variation of slab size in the context of steady-periodic (harmonic) variation of *To,a*. Increasing the slab size yields a larger fraction of core-driven ground heat transfer that is driven by the difference between the zone air temperature and the deep-ground temperature.

Informative Note: **Method of the Test Case:** This case is similar to Case GC40b but uses a large slab. Comparing results for heat flow per unit floor area (flux) for GC50b versus GC40b (GC50b – GC40b) checks the sensitivity to heat transfer caused by increasing the slab size. Compare heat-flow results from whole-building simulation programs to verified numerical model results. Analyze phase shift between variations of heat flow and *To,a*.

5.2.4.1.4.1 Input Specification. This case shall be modeled exactly as Case GC40b except for the following changes:

a. **Geometry.** Dimensions shall be modeled as specified in Figure 5-11 and Table 5-25.
b. **Heating System Capacity.** The heating system capacity shall be set so there is at least enough capacity to maintain the zone air temperature set point during the peak heating-load hour.

5.2.4.1.4.2 Output Requirements. Output shall be provided in accordance with Section 6.2.2.2.

5.2.4.1.5 Case GC55b—Shallow Deep-Ground Temperature. Case GC55b shall be modeled as specified in this section.

Informative Note: **Objective of the Test Case:** Test the sensitivity to variation of deep-ground-temperature depth in the context of steady-periodic (harmonic) variation of *To,a*. This case is relevant for areas with a relatively shallow groundwater table, which increases the effect of core heat flow that is driven by the difference between the zone air temperature and the deep-ground temperature.

Informative Note: **Method of the Test Case:** This case is similar to Case GC40b but uses a shallower deep-ground

Copyrighted material licensed to Sei Ito on 2020-06-26 for licensee's use only. All rights reserved. No further reproduction or distribution is permitted. Distributed by Techstreet for ASHRAE, www.techstreet.com

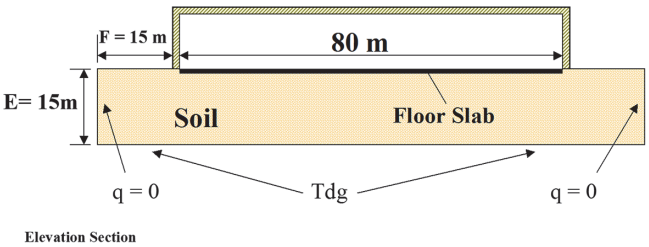

Figure 5-11 Case GC50b dimensions and below-grade boundary conditions.

Table 5-25 Case GC50b Input Parameters

Test Parameters	SI	I-P
Slab length *L*	80 m	262.47 ft
Slab width *B*	80 m	262.47 ft
Deep-ground boundary depth *E*	15 m	49.21 ft
Far-field boundary distance *F*	15 m	49.21 ft

Table 5-26 Case GC55b Deep-Ground Boundary Depth

Test Parameters	SI	I-P
Deep-ground boundary depth *E*	2 m	6.562 ft

boundary (heat sink) location. Comparison of results for GC55b versus GC40b (GC55b – GC40b) checks the sensitivity of deep-ground temperature depth. Compare heat-flow results from whole-building simulation programs to verified numerical model results. Analyze phase shift between variations of heat flow and *To,a*.

5.2.4.1.5.1 Input Specification. This case shall be modeled exactly as Case GC40b except for the following changes:

a. **Deep-Ground Boundary.** The deep-ground-temperature boundary depth shall be modeled as specified in Table 5-26.
b. **Heating System Capacity.** The heating system capacity shall be set so there is at least enough capacity to maintain the zone air temperature set point during the peak heating-load hour.

5.2.4.1.5.2 Output Requirements. Output shall be provided in accordance with Section 6.2.2.2.

5.2.4.1.6 Case GC60b—Steady State with Typical Interior Convective Surface Coefficient. Case GC60b shall be modeled as specified in this section.

Informative Note: **Objective of the Test Case:** Test sensitivity to the use of a more realistic interior convective surface heat transfer coefficient *h,int* in the steady-state context. With a more realistic coefficient, the zone floor surface temperature will be less uniform and will exhibit greater decrease outward from the center toward the zone perimeter boundary.

Informative Note: **Method of the Test Case:** This case is similar to Case GC30b but uses decreased *h,int*. Comparison of results for GC60b versus GC30b (GC60b – GC30b) checks the sensitivity of *h,int*. Compare heat-flow results from whole-building simulation programs to verified numerical model results.

Table 5-27 Case GC60b Interior Convective Surface Coefficient

Test Parameters	SI	I-P
h,int (interior convective surface coefficient)	7.95 W/(m^2·K)	1.3999 Btu/(h·ft^2·°F)

5.2.4.1.6.1 Input Specification. This case shall be modeled exactly as Case GC30b except for the following changes:

a. **Interior Convective Surface Coefficient.** The value for *h,int* shall be modeled as specified in Table 5-27. This value of *h,int* shall be applied to the interior side of the floor and other zone surfaces (i.e., walls and ceiling).

Surface IR emittances shall be modeled as 0 (or as low as the program being tested allows). If the program being tested allows direct user input of interior convective surface coefficients and interior surface IR emittances, then skip the remainder of this paragraph and proceed to Section 5.2.4.1.6.2. If the program being tested allows direct user input of combined interior surface coefficients only, set that value to 7.95 W/(m^2·K) (1.3999 Btu/[h·ft^2·°F]). If the program being tested does not allow direct user input of convective surface coefficients or combined surface coefficients, input a value for IR emittance such that an equivalent value for a combined surface coefficient of 7.95 W/(m^2·K) (1.3999 Btu/[h·ft^2·°F]) is obtained as closely as the program being tested is capable of, based on the convective surface coefficient that the program being tested automatically calculates.

5.2.4.1.6.2 Output Requirements. Output shall be provided in accordance with Section 6.2.2.1.

5.2.4.1.7 Case GC65b—Steady State with Typical Interior and Exterior Convective Surface Coefficients. Case GC65b shall be modeled as specified in this section.

Informative Note: **Objective of the Test Case:** Test sensitivity to the use of a more realistic exterior convective surface coefficient *h,ext* in the steady-state context. With a more realistic coefficient, the exterior ground surface temperature will be less uniform and will exhibit greater increase near the exterior side of the adiabatic wall.

Informative Note: **Method of the Test Case:** This case is similar to Case GC60b but uses decreased *h,ext*. Comparison of results for GC65b versus GC60b (GC65b – GC60b) checks the sensitivity of *h,ext*. Comparison of results for GC65b versus GC30b (GC65b – GC30b) checks the combined effect of sensitivity to *h,int* and *h,ext*. Compare heat-flow results from whole-building simulation programs to verified numerical model results.

5.2.4.1.7.1 Input Specification. This case shall be modeled exactly as Case GC60b except for the following changes:

a. **Exterior Convective Surface Coefficient.** The value for *h,ext* shall be modeled as specified in Table 5-28. This value of *h,ext* shall be applied to the exterior ground sur-

Copyrighted material licensed to Sei Ito on 2020-06-26 for licensee's use only. All rights reserved. No further reproduction or distribution is permitted. Distributed by Techstreet for ASHRAE, www.techstreet.com

Table 5-28 Case GC65b Interior and Exterior Convective Surface Coefficients

Test Parameters	SI	I-P
h,int (interior convective surface coefficient)	7.95 W/(m^2·K)	1.3999 Btu/(h·ft^2·°F)
h,ext (exterior [ground] convective surface coefficient)	11.95 W/(m^2·K)	2.1043 Btu/(h·ft^2·°F)

face and to other zone exterior surfaces (i.e., walls and ceiling). ***Informative Note:*** The value for *h,int* is repeated in Table 5-28 for convenience.

Surface IR emittances shall be modeled as 0 (or as low as the program being tested allows). If the program being tested allows direct user input of *h,ext* and exterior surface IR emittances, skip the remainder of this paragraph and proceed to Section 5.2.4.1.7.1(b). If the program being tested allows direct user input of combined exterior surface coefficients only, set that value to 11.95 W/(m^2·K) (2.1043 Btu/[h·ft^2·°F]). If the program being tested does not allow direct user input of convective surface coefficients or combined surface coefficients, input a value for IR emittance such that an equivalent value for combined surface coefficient of 11.95 W/(m^2·K) (2.1043 Btu/[h·ft^2·°F]) is obtained as closely as the program being tested is capable of, based on the convective surface coefficient that the program being tested automatically calculates.

b. **Weather Data.** The weather data provided with the following file, included on the accompanying electronic media, shall be used: GC65b.TM2.

If the program does not utilize site data from the weather data file, the site parameters provided in Normative Annex A1, Section A1.1.2 shall be used.

5.2.4.1.7.2 Output Requirements. Output shall be provided in accordance with Section 6.2.2.1.

5.2.4.1.8 Case GC70b—Harmonic Variation of Ambient Temperature with Typical Interior and Exterior Convective Surface Coefficients. Case GC70b shall be modeled as specified in this section.

Informative Note: **Objective of the Test Case:** Test sensitivity to the use of more realistic *h,int* and *h,ext* in the context of steady-periodic (harmonic) variation of *To,a*.

Informative Note: **Method of the Test Case:** This case is similar to Case GC40b but uses decreased *h,int* and *h,ext*. Comparison of results for GC70b versus GC40b (GC70b – GC40b) checks the combined sensitivities of *h,int* and *h,ext*. Compare heat-flow results from whole-building simulation programs to verified numerical model results. Analyze phase shift between variations of heat flow and *To,a*. Comparison of GC70b versus GC65b (GC70b – GC65b) annual hourly average floor conduction checks the sensitivity of average floor heat loss of the harmonic versus the steady-state condition in the context of using realistic convective surface coefficients.

5.2.4.1.8.1 Input Specification. This case shall be modeled exactly as Case GC40b except for the following changes:

a. **Convective Surface Coefficients.** *h,int* and *h,ext* shall be modeled as specified in Table 5-28 (see Section 5.2.4.1.7.1).

b. **Weather Data.** The weather provided with the following file, included on the accompanying electronic media, shall be used: GC70b.TM2.

If the program does not utilize site data from the weather data file, the site parameters provided in Normative Annex A1, Section A1.1.2 shall be used. ***Informative Note:*** See Normative Annex A1, Section A1.1.2.1 regarding harmonically varying inputs.

5.2.4.1.8.2 Output Requirements. Output shall be provided in accordance with Section 6.2.2.2.

5.2.4.1.9 Case GC80b—Reduced Slab and Ground Conductivity. Case GC80b shall be modeled as specified in this section.

Informative Note: **Objective of the Test Case:** Test sensitivity to reduced slab and ground conductivity in the context of steady-periodic (harmonic) variation of *To,a*.

Informative Note: **Method of the Test Case:** This case is similar to Case GC40b but uses decreased slab and ground conductivity. Comparison of results for GC80b versus GC40b (GC80b – GC40b) checks the sensitivity of slab and ground conductivity. Compare heat-flow results from whole-building simulation programs to verified numerical model results. Analyze phase shift between variations of heat flow and *To,a*.

5.2.4.1.9.1 Input Specification. This case shall be modeled exactly as Case GC40b except for the following change:

Soil and slab thermal conductivity = 0.5 W/(m·K)
(0.289 Btu/[h·ft·°F])

5.2.4.1.9.2 Output Requirements. Output shall be provided in accordance with Section 6.2.2.2.

5.2.4.2 "a"-Series Cases. The "a"-series cases shall be modeled as specified in this section. Case GC10a shall be the first case modeled, and all other tests in this series shall be sequential revisions to a previously completed model. The base-case models for each case shall be as follows:

Case	Basis for Case
GC10a	Not applicable
GC30a	GC30b
GC40a	GC30a

Informative Note: The "a"-series cases are for detailed numerical-methods programs (e.g., 3D numerical models) that are either integrated within or run independently from whole-building energy simulation programs. Within the "a"-series cases, Case GC10a provides a 3D steady-state analytical solution for rectangular surface geometry [B-9].

5.2.4.2.1 Case GC10a Analytical Solution Case. Case GC10a shall be modeled as specified in this section.

Informative Note: **Objective of the Test Case:** Compare steady-state heat-flow results for detailed 3D numerical models used independently from whole-building energy simulation

Copyrighted material licensed to Sei Ito on 2020-06-26 for licensee's use only. All rights reserved. No further reproduction or distribution is permitted. Distributed by Techstreet for ASHRAE, www.techstreet.com

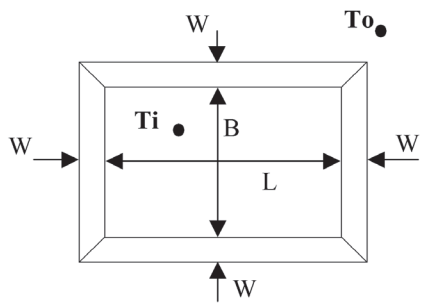

Figure 5-12 Case GC10a plan view of the floor geometry.

programs versus an analytical solution (described in Informative Annex B11, Section B11.2.1). Users of such detailed models are to determine appropriate inputs to match the boundary conditions and assumptions of the analytical solution, including appropriate meshing, the amount of ground that needs to be modeled, and length of simulation, etc. Attention to such modeling details is needed to obtain consistent high-quality results throughout these test cases. In other test cases where exact analytical solutions are not known—and if there is good agreement among detailed numerical models and appropriate application of the models is well documented—the detailed numerical model results can be used as verified numerical model results. Such results provide a secondary mathematical truth standard, founded on the range of disagreement of the verified numerical model results, for comparing results of other models typically used with whole-building energy simulation programs.

Informative Note: **Method of the Test Case:** This case calculates steady-state heat flow using fundamental 3D heat transfer analysis of a semi-infinite solid[B-9, B-13]. Figure 5-12 shows the boundary conditions at the upper surface of the semi-infinite solid and describes a rectangular floor surface bounded by a concentrically rectangular perimeter surface of finite width that separates the rectangular floor surface from the exterior ground surface. The concentrically rectangular surface may also be thought of as the base of a wall that separates the interior floor surface from the exterior ground surface. Required boundary conditions may limit the number of models that can run this test case. It is recommended to check sensitivity to mesh detail, length of simulation, amount of ground modeled, convergence tolerance, etc., and demonstrate that the model is at a level of detail where including further detail yields negligible sensitivity to results.

5.2.4.2.1.1 Geometry and General Description. Geometry shall be modeled as described in Figure 5-12. Parameters related to Figure 5-12 and other input parameters shall be modeled as specified in Table 5-29. Boundary conditions and assumptions shall be as follows:

a. Interior floor surface temperature *Ti* shall be constant and everywhere equal.
b. Exterior ground surface temperature *To* shall be constant and everywhere equal.
c. Linear variation between *Ti* and *To* over a perimeter surface boundary of finite width *W* shall be imposed only at the surface of the ground. ***Informative Note:*** This avoids discontinuity at the interior/exterior perimeter boundary.
d. The ground surface shall be a semi-infinite solid that extends outward infinitely in all horizontal directions from the perimeter surface boundary defined in Figure 5-12 and the ground shall extend infinitely downward from all points on the infinite horizontal surface (including from the surfaces of Figure 5-12 and beyond).
e. Deep-ground boundary condition at infinite soil depth = *To*.
f. Thermal conductivities of slab and soil shall be equal.
g. There shall be no radiative exchange.

Table 5-29 Case GC10a Input Parameters

Test Parameters	SI	I-P
Slab length *L*	12 m	39.37 ft
Slab width *B*	12 m	39.37 ft
Perimeter surface boundary width *W*	0.24 m	0.7874 ft
Interior (slab) surface temperature *Ti*	30°C	86°F
Exterior (ground) surface temperature *To*	10°C	50°F
Thermal conductivity of the slab and soil	1.9 W/(m·K)	1.098 Btu/(h·ft·°F)

5.2.4.2.1.2 Modeling Precision

5.2.4.2.1.2.1 Simulation Duration. The simulation shall be run until there is ≤0.1% variation between the floor-slab conduction for the last hour of the last year of the simulation and the last hour of the preceding year of the simulation. If the software being tested is not capable of this, the simulation duration shall be for as long as the software being tested allows.

Informative Note: **Thermal Node Mesh:** It is recommended to demonstrate that the current level of modeling detail yields negligible (≤0.1%) change in results versus a lesser level of detail; examine the effects of shallower deep-ground boundary, shorter far-field boundary distance, and less detailed mesh (if applicable). For ground depth and far-field length variations, it is recommended to increase the number of mesh nodes proportionally to the increase in soil volume being modeled.

Informative Note: **Convergence Tolerance:** If the software being tested allows user specification of convergence tolerance, it is recommended to demonstrate that the current level of heat-flow or temperature convergence tolerance yields negligible (≤0.1%) change in results versus the next finer convergence tolerance.

Informative Note: **Verified Numerical Model Precision:** For development of verified numerical model results presented in Informative Annex B8, Section B8.2, the model developers documented their model precision work in the originating research. For best results, users running the "a"-series cases should review Appendices II-A, II-B, and II-C of

Copyrighted material licensed to Sei Ito on 2020-06-26 for licensee's use only. All rights reserved. No further reproduction or distribution is permitted. Distributed by Techstreet for ASHRAE, www.techstreet.com

Table 5-30 Case GC30a Input Parameters

Test Parameters	SI	I-P
Interior slab surface temperature *Ti*	30°C	86°F
Exterior ground surface temperature *To*	10°C	50°F
Deep-ground boundary depth *E*	30 m	98.43 ft
Far-field boundary distance *F*	20 m	65.62 ft

the originating research report[B-14] and should apply appropriate modeling precision techniques documented there.

5.2.4.2.1.3 Output Requirements. Output shall be provided in accordance with Section 6.2.2.3.

5.2.4.2.2 Case GC30a—"a" Series Steady-State Base Case with Direct Input of Surface Temperatures. Case GC30a shall be modeled as specified in this section.

Informative Note: **Objective of the Test Case:** Compare steady-state heat-flow results from detailed numerical models to each other. Compare whole-building simulation programs (if possible) versus verified numerical model results. Constant temperature surface boundary conditions may limit the number of models that can run this case.

Informative Note: **Method of the Test Case:** This case drives floor conduction based on the direct-input temperature difference between the interior surface of the floor slab and the exterior surface of the ground (and deep-ground boundary condition). This case is similar to Case GC10a but uses an adiabatic wall/ground interface boundary (see Figure 5-8 [Section 5.2.4.1.1.1]). The adiabatic wall/ground interface boundary replaces the linearly varying temperature perimeter surface boundary of Case GC10a. Soil and far-field boundary conditions are also described. Comparison of GC30a versus GC10a (GC30a – GC10a) checks the sensitivity to perimeter surface boundary conditions for an adiabatic versus a linearly varying temperature condition. It is recommended to check sensitivity (if applicable) to mesh detail, length of simulation, amount of ground modeled, convergence tolerance, etc., and demonstrate that the modeling is at a level of detail where including further detail yields negligible sensitivity to results.

5.2.4.2.2.1 Input Specification. This case shall be modeled exactly as Case GC30b except for the following changes:

a. **Soil and Slab Thermal Properties and Boundary Conditions.** Surface temperatures and soil geometry shall be modeled as given in Table 5-30.

   Ti and *To* shall be applied directly to the surfaces and are constant and everywhere equal.

   For programs that cannot directly input surface temperatures but are capable of inputting very high surface coefficients h, $h \geq 5000$ W/(m^2·K) (881 Btu/[h·ft^2·°F]) shall be used, applying the greatest value allowed by the program being tested that allows for a stable simulation. If the program being tested does not allow input of $h \geq 5000$ W/(m^2·K) (881 Btu/[h·ft^2·°F]) but does allow input of $h >$ 100 W/(m^2·K) (17.6 Btu/[h·ft^2·°F]), apply the greatest value allowed by the program being tested. For programs that do not allow direct input of surface temperatures and do not allow convective surface coefficients greater than 100 W/(m^2·K) (17.6 Btu/[h·ft^2·°F]), Case GC30b shall be run instead of Case GC30a. ***Informative Note:*** Sensitivity tests indicate that a constant/uniform surface temperature can be mimicked by setting zone and ambient air temperatures to *Ti* and *To* and applying $h \geq 5000$ W/(m^2·K) (881 Btu/[h·ft^2·°F]). Be aware that very high surface coefficients may cause some programs to become unstable.

b. **Above Grade Construction.** If the model being tested allows direct input of surface temperatures and direct output of resulting floor conduction, only the floor slab shall be modeled, and the above-grade construction for Case GC30b (see Section 5.2.4.1.1.3) shall not be applied.

c. **Weather Data.** The constant temperature TMY2-format weather data provided with the following file, included on the accompanying electronic media, shall be used: GC30a.TM2.

   If the program does not utilize site data from the weather data file, the site parameters provided in Normative Annex A1, Section A1.1.2 shall be used.

d. **Mechanical System.** If the model being tested applies direct input of interior slab surface temperature, and a building zone is not modeled, the mechanical system of Case GC30b (see Section 5.2.4.1.1.5) shall not be applied and the remainder of this paragraph shall be ignored (skip to Section 5.2.4.2.2.2). If a building zone is modeled, the heating system capacity shall be large enough to maintain the zone air temperature set point. ***Informative Note:*** For example, 1000 kW (3412 kBtu/h).

5.2.4.2.2.2 Output Requirements. Output shall be provided in accordance with Section 6.2.2.1.

Informative Note: Note the exception for Case GC30a in Section 6.2.2.1.1.1.

5.2.4.2.3 Case GC40a—Harmonic Variation of Direct-Input Exterior Surface Temperature. Case GC40a shall be modeled as specified in this section.

Informative Note: **Objective of the Test Case:** Compare heat-flow results for approximate steady-periodic (harmonic) variation of exterior ground surface temperature *To* from detailed numerical models to each other. Compare whole-building simulation programs (if possible) to verified numerical model results. Analyze the phase shift between variations of heat flow and *To*. Direct-input surface temperature boundary conditions may limit the number of models that can run this case.

Informative Note: **Method of the Test Case:** This case is similar to Case GC30a but uses harmonically varying *To,a* for input as *To*. Hourly TMY2-format weather data are provided for approximating a sinusoidal annual cycle of varying daily average temperature with sinusoidal diurnal temperature cycle overlaid (a high-frequency cycle overlaid on a low-frequency cycle). Comparison of GC40a versus GC30a (GC40a – GC30a) annual hourly average floor conduction checks the sensitivity of average floor heat loss of the harmonic condition versus the steady-state condition. It is recommended to check sensitivity (if applicable) to mesh detail, length of simulation, amount of ground modeled, convergence tolerance, etc., and demonstrate that the modeling is at a level of detail where including further detail yields negligible sensitivity to results.

Copyrighted material licensed to Sei Ito on 2020-06-26 for licensee's use only. All rights reserved. No further reproduction or distribution is permitted. Distributed by Techstreet for ASHRAE, www.techstreet.com

5.2.4.2.3.1 Input Specification. This case is exactly as Case GC30a except for the following changes:

a. **Weather Data.** The weather data provided with the following file, included on the accompanying electronic media, shall be used: GC40a.TM2.

If the program does not utilize site data from the weather data file, the site parameters provided in Normative Annex A1, Section A1.1.2 shall be used. ***Informative Note:*** These data are described in Normative Annex A1, Section A1.1.2; see Section A1.1.2.1 regarding harmonically varying inputs.

b. **Heating System Capacity.** If the model being tested applies direct input of interior slab surface temperature, and a building zone is not modeled, the mechanical system of Case GC30b (see Section 5.2.4.1.1.5) shall not be applied and the remainder of this paragraph shall be ignored (skip to Section 5.2.4.2.3.1[c]). If a building zone is modeled, the heating system capacity shall be set so there is at least enough capacity to maintain the zone air temperature set point during the peak heating-load hour.

c. **Simulation Duration.** The simulation shall be run until there is ≤0.1% variation between the annual floor slab conduction for the last year of the simulation and the preceding year of the simulation. If the software being tested is not capable of this, the simulation duration shall be for as long as the software being tested is capable of running.

5.2.4.2.3.2 Output Requirements. Output shall be provided in accordance with Section 6.2.2.2. ***Informative Note:*** Note the Case GC40a exception in Section 6.2.2.2.2.1.

5.2.4.3 "c"-Series Cases. The "c"-series cases shall be modeled as specified in this section. Case GC30c shall be the first modeled, and all other tests in this series shall be sequential revisions to a previously completed model. The base-case models for each case shall be as follows:

Case	Basis for Case
GC30c	GC30b
GC40c	GC30c
GC45c	GC40c
GC55c	GC40c
GC80c	GC40c

Informative Note: The "c"-series cases apply boundary conditions with a fixed interior combined surface coefficient assumption of 7.95 W/m^{2}K (1.3999 Btu/[h·ft^2·°F]) and the exterior ground surface temperature equal to the outdoor dry-bulb temperature. These boundary conditions are compatible with the assumptions of the BASESIMP program (see Informative Annex B11, Table B11-4).

5.2.4.3.1 Case GC30c—"c"-Series Steady-State Base Case. Case GC30c shall be modeled as specified in this section.

Informative Note: **Objective of the Test Case:** Compare whole-building simulation programs versus verified numerical model results. The constant temperature exterior surface boundary condition may limit the number of models that can run this case.

Informative Note: **Method of the Test Case:** This case drives floor conduction based on the difference between the zone air temperature and *To* (and deep-ground boundary temperature). This case is similar to GC30a and GC30b but uses different boundary conditions. Comparison of GC30c versus GC30a (GC30c – GC30a) checks the sensitivity to reduced interior surface coefficient; sensitivity may also be affected (secondarily) by reduced ground depth and reduced far-field ground distance.

Table 5-31 Case GC30c Input Parameters

Test Parameters	SI	I-P
Interior combined surface coefficient *h,int*	7.95 W/(m^2·K)	1.3999 Btu/(h·ft^2·°F)
Exterior ground surface temperature *To*	10°C	50°F
Far-field boundary distance *F*	8 m	26.24 ft

5.2.4.3.1.1 Input Specification. This case shall be modeled exactly as Case GC30b except for the following changes:

a. **Thermal Properties and Boundary Conditions.** Interior and exterior surface boundary conditions and the amount of soil modeled (versus Case GC30b) shall be as specified in Table 5-31.

If the program being tested allows direct user input of combined interior surface coefficients, then skip the remainder of this paragraph. If the program being tested allows direct user input of convective surface coefficients but allows only automatically calculated surface IR radiative exchange, the interior convective surface coefficient shall be 7.95 W/(m^2·K) (1.3999 Btu/[h·ft^2·°F]) and the interior surface IR emittance shall be 0, or as low as the program being tested allows. If the program being tested does not allow direct user input of convective surface coefficients or combined surface coefficients, a value for IR emittance shall be used such that an equivalent value for interior combined surface coefficient of 7.95 W/(m^2·K) (1.3999 Btu/[h·ft^2·°F]) is obtained.

Exterior ground surface temperature *To* shall be applied directly to the surface and shall be constant and everywhere equal.

For programs that cannot directly input *To* but are capable of inputting very high *h,ext*, *h,ext* ≥ 5000 W/(m^2·K) (881 Btu/[h·ft^2·°F]) shall be used, applying the greatest value that the program being tested allows for a stable simulation. If the program being tested does not allow input of *h,ext* ≥ 5000 W/(m^2·K) (881 Btu/[h·ft^2·°F]), the greatest value allowed by the program being tested shall be used. ***Informative Note:*** Sensitivity tests indicate that a constant/uniform surface temperature can be mimicked by setting *To,a* to *To* and applying *h,ext* ≥ 5000 W/(m^2·K)

Copyrighted material licensed to Sei Ito on 2020-06-26 for licensee's use only. All rights reserved. No further reproduction or distribution is permitted. Distributed by Techstreet for ASHRAE, www.techstreet.com

(881 Btu/[h·ft^2·°F]). Be aware that very high surface coefficients may cause some programs to become unstable.

b. **Weather Data.** The constant temperature TMY2-format weather data provided with the following file, included on the accompanying electronic media, shall be used: GC30a.TM2.

If the program does not utilize site data from the weather data file, the site parameters provided in Normative Annex A1, Section A1.1.2 shall be used.

5.2.4.3.1.2 Output Requirements. Output shall be provided in accordance with Section 6.2.2.1.

Informative Note: Note the Case GC30c exception regarding steady-state near-surface temperature $T_{surf,n}$ results as described in Section 6.2.2.1.1(d).

5.2.4.3.2 Case GC40c—"c"-Series Harmonic Variation of Direct-Input Exterior Surface Temperature. Case GC40c shall be modeled as specified in this section.

Informative Note: **Objective of the Test Case:** Compare heat-flow results for approximate steady-periodic (harmonic) variation of exterior ground surface temperature *To* from whole-building simulation programs versus verified numerical model results. Analyze the phase shift between variations of heat flow and *To*. The direct-input *To* boundary condition may limit the number of models that can run this case.

Informative Note: **Method of the Test Case:** This case is similar to Case GC30c but uses harmonically varying *To,a* for input as *To*. Hourly TMY2-format weather data are provided for approximating a sinusoidal annual cycle of varying daily average temperature with sinusoidal diurnal temperature cycle overlaid (a high-frequency cycle overlaid on a low-frequency cycle). Comparison of GC40c versus GC30c (GC40c – GC30c) annual hourly average floor conduction checks the sensitivity of average floor heat loss of the harmonic condition versus the steady-state condition.

5.2.4.3.2.1 Input Specification. This case shall be modeled exactly as Case GC30c except for the following changes:

a. **Weather Data.** The weather data provided with the following file, included on the accompanying electronic media, shall be used: GC40a.TM2.

If the program does not utilize site data from the weather data file, the site parameters provided in Normative Annex A1, Section A1.1.2 shall be used. ***Informative Note:*** These data are described in Normative Annex A1, Section A1.1.2; see Section A1.1.2.1 regarding harmonically varying inputs.

b. **Heating System Capacity.** The heating system capacity shall be set so there is at least enough capacity to maintain the zone air temperature set point during the peak heating-load hour. ***Informative Note:*** Heating capacity may vary among the test cases. This specification for the heating capacity is repeated for harmonically varying cases where floor conduction of the verified numerical models is greater for the given case than for its designated base case.

c. **Simulation Duration.** The simulation shall be run until there is ≤0.1% variation between the annual floor slab conduction for the last year of the simulation and the preceding year of the simulation. If the software being tested is not capable of this, the simulation duration shall be for as long as the software being tested is capable of running.

Table 5-32 Case GC45c Slab Dimensions

Test Parameters	SI	I-P
Slab length *L*	36 m	118.11 ft
Slab width *B*	4 m	13.12 ft

5.2.4.3.2.2 Output Requirements. Output shall be provided in accordance with Section 6.2.2.2.

5.2.4.3.3 Case GC45c—"c"-Series Aspect Ratio. Case GC45c shall be modeled as specified in this section.

Informative Note: **Objective of the Test Case:** Test the sensitivity to variation of aspect ratio (AR) in the context of steady-periodic (harmonic) variation of *To*. The AR for a given slab area directly affects the ratio of perimeter heat transfer to core heat transfer. In this context, the term "perimeter" is different from the perimeter boundary described in Case GC10a. Here, perimeter heat transfer is the heat transfer driven by the zone to ambient air temperature difference through a relatively thin layer of soil; core heat transfer is driven by the zone to deep-ground temperature difference, through a relatively thick layer of soil.

Informative Note: **Method of the Test Case:** This case is similar to Case GC40c. It uses a slab with the same surface area but a different AR. Comparison of results for GC45c versus GC40c (GC45c – GC40c) checks the sensitivity of AR. Compare heat-flow results from whole-building simulation programs to verified numerical model results. Analyze phase shift between variations of heat flow and *To*.

5.2.4.3.3.1 Input Specification. This case shall be modeled exactly as Case GC40c except for the following changes:

a. **Slab Dimensions.** Slab dimensions shall be modeled as specified in Table 5-32.

b. **Heating System Capacity.** The heating system capacity shall be set so there is at least enough capacity to maintain the zone air temperature set point during the peak heating-load hour.

5.2.4.3.3.2 Output Requirements. Output shall be provided in accordance with Section 6.2.2.2 except that slab dimensions *L* and *B* from Table 5-32 shall be used.

5.2.4.3.4 Case GC55c—"c"-Series Shallow Deep-Ground Temperature. Case GC55c shall be modeled as specified in this section.

Informative Note: **Objective of the Test Case:** Test the sensitivity to variation of deep-ground temperature depth in the context of steady-periodic (harmonic) variation of *To*. This case is relevant for areas with a relatively shallow groundwater table, which increases the effect of core heat flow that is driven by the difference between the zone air temperature and the deep-ground temperature.

Informative Note: **Method of the Test Case:** This case is similar to Case GC40c but uses a shallower deep-ground boundary (heat sink) location. Comparison of results for

Copyrighted material licensed to Sei Ito on 2020-06-26 for licensee's use only. All rights reserved. No further reproduction or distribution is permitted. Distributed by Techstreet for ASHRAE, www.techstreet.com

Table 5-33 Case GC55c Deep-Ground Boundary Depth

Test Parameters	SI	I-P
Deep-ground boundary depth *E*	5 m	16.40 ft

GC55c versus GC40c (GC55c – GC40c) checks the sensitivity of deep-ground temperature depth. Compare heat-flow results from whole-building simulation programs to verified numerical model results. Analyze phase shift between variations of heat flow and *To*.

5.2.4.3.4.1 Input Specification. This case shall be modeled exactly as Case GC40c except for the following changes:

a. **Deep-Ground Boundary Depth.** The deep-ground temperature boundary depth shall be modeled as specified in Table 5-33.
b. **Heating System Capacity.** The heating system capacity shall be set so there is at least enough capacity to maintain the zone air temperature set point during the peak heating-load hour.

5.2.4.3.4.2 Output Requirements. Output shall be provided in accordance with Section 6.2.2.2.

5.2.4.3.5 Case GC80c—"c"-Series Reduced Slab and Ground Conductivity. Case GC80c shall be modeled as specified in this section.

Informative Note: **Objective of the Test Case:** Test sensitivity to reduced slab and ground conductivity in the context of steady-periodic (harmonic) variation of *To*.

Informative Note: **Method of the Test Case:** This case is similar to Case GC40c but uses decreased slab and ground conductivity. Comparison of results for GC80c versus GC40c (GC80c – GC40c) checks the sensitivity of slab and ground conductivity. Compare heat-flow results from whole-building simulation programs to verified numerical model results. Analyze phase shift between variations of heat flow and *To*.

5.2.4.3.5.1 Input Specification. This case shall be modeled exactly as Case GC40c except for the following:

Soil and slab thermal conductivity = 0.85 W/(m·K) (0.491 Btu/[h·ft·°F]).

5.2.4.3.5.2 Output Requirements. Output shall be provided in accordance with Section 6.2.2.2.

5.3 Input Specification for Space-Cooling Equipment Performance Tests

5.3.1 Case CE100: Base-Case Building and Mechanical System for Analytical Verification Tests. Case CE100 shall be the first case modeled in Section 5.3.

Informative Note: The bulk of the work for implementing the tests of Sections 5.3.1 and 5.3.2 is assembling an accurate base-building model. It is recommended that base-building inputs be double checked and disagreements in results be diagnosed before proceeding to the other cases.

5.3.1.1 Weather Data. Either the CE100.TMY data (three-month-long TMY data files) or CE100A.TM2 data (year-long TMY2 data files) provided with the accompanying electronic files shall be used for Case CE100. These two sets of data files are described in detail in Normative Annex A1, Section A1.2.1.

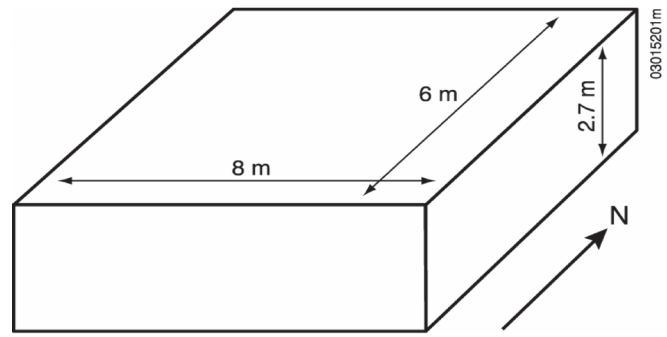

Figure 5-13 HVAC BESTEST Case CE100: Near-adiabatic envelope geometry.

Informative Note: Other cases described in later sections call for different weather files as needed.

5.3.1.2 Output Requirements. Case CE100 shall apply all of the output requirements specified in Sections 6.1 and 6.3.1.

Informative Note: All of the tests of Sections 5.3.1 and 5.3.2 have the same output requirements.

5.3.1.3 Building Geometry. The base-building plan shall be a 48 m^2 (517 ft^2) floor area, single-story, low-mass building with rectangular-prism geometry as shown in Figure 5-13. Zone air volume shall be 129.6 m^3 (4577 ft^3).

5.3.1.4 Building Envelope Thermal Properties. For the building envelope, the thermal and material properties listed in Table 5-34 (SI units) or 5-35 (I-P units) shall be used.

Informative Note: The base-building zone is intended as a near-adiabatic test cell with cooling load driven by user-specified internal gains.

5.3.1.4.1 If the software being tested does not allow as much insulation as Table 5-34 or 5-35 specifies, use the thickest insulation the software being tested permits, and reduce floor, roof, and wall areas to achieve the thermal conductance (UA) values listed in Table 5-34 or 5-35. The zone air volume shall not be changed from 129.6 m^3 (4577 ft^3).

5.3.1.4.2 Materials of the space shall have no thermal or moisture capacitance, and there is no moisture diffusion through them. If the software being tested requires inputs for thermal capacitance, moisture capacitance, or moisture diffusion, the minimum values the software being tested allows shall be used.

5.3.1.4.3 If the program being tested automatically calculates air density, skip the instructions in this section and proceed to Section 5.3.1.4.4. Air density at sea level is 1.201 kg/m^3 (0.075 lb/ft^3). Use of different (nonspecified) values shall not be prohibited if there is a mathematical, physical, or logical basis for applying them. Where different values are used, they shall be applied consistently throughout the test cases. Use of nonspecified values shall be documented in the Standard Output Report specified in Normative Annex A2.

Copyrighted material licensed to Sei Ito on 2020-06-26 for licensee's use only. All rights reserved. No further reproduction or distribution is permitted. Distributed by Techstreet for ASHRAE, www.techstreet.com

Table 5-34 Material Specifications Case CE100 (SI Units)

EXTERIOR WALL (inside to outside)				
ELEMENT	k (W/(m·K))	Thickness (m)	U (W/(m²·K))	R (m²·K/W)
Int Surf Coef			8.290	0.121
Insulation[a]	0.010	1.000	0.010	100.000
Ext Surf Coef			29.300	0.034
Total air - air			0.010	100.155
Total surf - surf			0.010	100.000

FLOOR (inside to outside)				
ELEMENT	k (W/(m·K))	Thickness (m)	U (W/(m²·K))	R (m²·K/W)
Int Surf Coef[b]			8.290	0.121
Insulation[a]	0.010	1.000	0.010	100.000
Ext Surf Coef			29.300	0.034
Total air - air			0.010	100.155
Total surf - surf			0.010	100.000

ROOF (inside to outside)				
ELEMENT	k (W/(m·K))	Thickness (m)	U (W/(m²·K))	R (m²·K/W)
Int Surf Coef[b]			8.290	0.121
Insulation[a]	0.010	1.000	0.010	100.000
Ext Surf Coef			29.300	0.034
Total air - air			0.010	100.155
Total surf - surf			0.010	100.000

SUMMARY		
COMPONENT	AREA (m²)	UA (W/K)
Wall	75.600	0.755
Floor	48.000	0.479
Roof	48.000	0.479
Infiltration[c]		0.000
Total UA		1.713

ach	VOLUME (m³)	ALTITUDE (m)
0.00	129.6	2.0

[a] This level of insulation defines a near-adiabatic condition such that conduction gains are < 1% of the total cooling load. If the software being tested does not allow this much insulation, then reduce the floor, roof and wall areas to achieve the listed UA values.

[b] The interior film coefficient for floors and ceilings is a compromise between upward and downward heat flow for summer and winter.

[c] UA corresponding to infiltration based on:
ach × Volume × (specific heat of air) × (density of air at specified altitude)

CE100env1-140-2011.xls; Nov 2, 2011

Copyrighted material licensed to Sei Ito on 2020-06-26 for licensee's use only.
All rights reserved. No further reproduction or distribution is permitted. Distributed by Techstreet for ASHRAE, www.techstreet.com

Table 5-35 Material Specifications Case CE100 (I-P Units)

EXTERIOR WALL (inside to outside)				
ELEMENT	k (Btu/(h·ft·F))	Thickness (ft)	U (Btu/(h·ft^2·F))	R (h·ft^2·F/Btu)
Int Surf Coef			1.461	0.684
Insulation[a]	0.00578	3.281	0.002	567.447
Ext Surf Coef			5.163	0.194
Total air - air			0.00176	568.325
Total surf - surf			0.00176	567.447

FLOOR (inside to outside)				
ELEMENT	k (Btu/(h·ft·F))	Thickness (ft)	U (Btu/(h·ft^2·F))	R (h·ft^2·F/Btu)
Int Surf Coef[b]			1.461	0.684
Insulation[a]	0.00578	3.281	0.002	567.447
Ext Surf Coef			5.163	0.194
Total air - air			0.00176	568.325
Total surf - surf			0.00176	567.447

ROOF (inside to outside)				
ELEMENT	k (Btu/(h·ft·F))	Thickness (ft)	U (Btu/(h·ft^2·F))	R (h·ft^2·F/Btu)
Int Surf Coef[b]			1.461	0.684
Insulation[a]	0.00578	3.281	0.002	567.447
Ext Surf Coef			5.163	0.194
Total air - air			0.00176	568.325
Total surf - surf			0.00176	567.447

SUMMARY		
COMPONENT	AREA (ft^2)	UA (Btu/(h·F))
Wall	813.752	1.432
Floor	516.668	0.909
Roof	516.668	0.909
Infiltration[c]		0.000
Total UA		3.250

ACH	VOLUME (ft^3)	ALTITUDE (ft)	UAinf[c] (Btu/(h·F))
0.000	4577	6.56	0.000

[a] This level of insulation defines a near-adiabatic condition such that conduction gains are < 1% of the total cooling load. If the software being tested does not allow this much insulation, then reduce the floor, roof and wall areas to achieve the listed UA values.

[b] The interior film coefficient for floors and ceilings is a compromise between upward and downward heat flow for summer and winter.

[c] UA corresponding to infiltration based on:
ach × Volume × (specific heat of air) × (density of air at specified altitude)

CE100env1-140-2011.xls; Nov 2, 2011

Copyrighted material licensed to Sei Ito on 2020-06-26 for licensee's use only.
All rights reserved. No further reproduction or distribution is permitted. Distributed by Techstreet for ASHRAE, www.techstreet.com

5.3.1.4.4 The floor has the same exterior film coefficient as the walls.

Informative Note: This is as if the entire zone were suspended above the ground.

5.3.1.4.5 For software that requires input of ground thermal properties, the following characteristics shall be used:

- Soil thermal conductivity k = 1.3 W/(m·K) = 0.751 Btu/(h·ft·°F)
- Soil density = 1500 kg/m^3 = 93.64 lb/ft^3
- Soil specific heat = 800 J/(kg·K) = 0.191 Btu/(lb·°F)
- Deep ground temperature = 10°C = 50°F

Informative Note: This assumes that the ground in the vicinity of the building is dry-packed soil.

5.3.1.5 Infiltration. An infiltration rate of 0.0 ach shall be used for the entire simulation period.

5.3.1.6 Internal Heat Gains. The following sensible and latent internal heat gains shall be used:

- Sensible internal gains = 5400 W (18430 Btu/h), continuously (24 hours per day for the full simulation period)
- Latent internal gains = 0 W (0 Btu/h), continuously (24 hours per day for the full simulation period)

Sensible internal gains are 100% convective.

Informative Note: For the test cases of Sections 5.3.1 and 5.3.2, zone sensible and latent internal gains are assumed to be distributed evenly throughout the zone air. These are internally generated sources of heat (from equipment, lights, people, etc.) that are not related to the operation of the mechanical cooling system or its air distribution fan.

5.3.1.7 Opaque Surface Radiative Properties. The interior and exterior opaque surface solar (visible and ultraviolet wavelengths) absorptances and infrared emittances listed in Table 5-36 shall be used.

5.3.1.8 Exterior Combined Radiative and Convective Surface Coefficients. If the program being tested automatically calculates exterior surface radiation and convection, skip the instructions in this section and proceed to Section 5.3.1.9. If the program being tested does not calculate this effect, 29.3 W/(m^2·K) (5.163 Btu/[h·ft^2·°F]) shall be used for all exterior surfaces.

Informative Note: This value is based on a mean annual wind speed of 4.02 m/s for a surface with roughness equivalent to rough plaster or brick and is consistent with Informative Annex B4.

5.3.1.9 Interior Combined Radiative and Convective Surface Coefficients. If the program being tested automatically calculates interior surface radiation and convection, skip the instructions in this section and proceed to Section 5.3.1.10. If the program being tested does not calculate these effects, the constant combined radiative and convective surface coefficients given in Table 5-37 shall be used. If the program being tested does not allow scheduling of these coefficients, use 8.29 W/(m^2·K) (1.46 Btu/[h·ft^2·°F]) for all horizontal surfaces. Use of different (nonspecified) values shall not be prohibited if there is a mathematical, physical, or logical basis for applying them. Where different values are used, they shall be applied consistently throughout the test cases. Use of nonspecified values shall be documented in the Standard Output Report specified in Normative Annex A2.

Table 5-36 Opaque Surface Radiative Properties

	Interior Surface	Exterior Surface
Solar absorptance	0.6	0.1
Infrared emittance	0.9	0.9

Table 5-37 Interior Combined Surface Coefficient versus Surface Orientation

Orientation of Surface and Heat Flow	Interior Combined Surface Coefficient
Horizontal heat transfer on vertical surfaces	8.29 W/(m^2·K) [1.46 Btu/(h·ft^2·°F)]
Upward heat transfer on horizontal surfaces	9.26 W/(m^2·K) [1.63 Btu/(h·ft^2·°F)]
Downward heat transfer on horizontal surfaces	6.13 W/(m^2·K) [1.08 Btu/(h·ft^2·°F)]

For cases with an interior infrared emissivity of 0.9, a radiative portion of 5.13 W/(m^2·K) [0.90 Btu/(h·ft^2·°F)] shall be permitted for these combined coefficients.

Informative Note: Informative Annex B5 includes background information about combined radiative and convective film coefficients.

5.3.1.10 Mechanical System. The mechanical system specified in Figure 5-14 and in the following sections shall be used.

Informative Note: The mechanical system represents a simple vapor compression cooling system, or more precisely, a unitary split air-conditioning system consisting of an air-cooled condensing unit and indoor evaporator coil. See Section 3 for definitions of terminology used in this section.

5.3.1.10.1 General Information. The system shall have the following characteristics:

- 100% convective air system.
- Zone air is perfectly mixed.
- No outdoor air; no exhaust air.
- Single-speed, draw-through air distribution fan.
- Indoor and outdoor fans cycle ON and OFF together with the compressor.
- Air-cooled condenser.
- Single-speed reciprocating compressor, R-22 refrigerant, no cylinder unloading.
- No system hot-gas bypass.
- The compressor, condenser, and condenser fan are located outside the conditioned zone.
- All zone air moisture that condenses on the evaporator coil (latent load) leaves the system through a condensate drain.
- Crankcase heater and other auxiliary energy = 0.

Informative Note: In one of the field-trial simulations prior to publication of the test procedure, simultaneous use of zero outdoor air and zero infiltration caused an error in some

Copyrighted material licensed to Sei Ito on 2020-06-26 for licensee's use only. All rights reserved. No further reproduction or distribution is permitted. Distributed by Techstreet for ASHRAE, www.techstreet.com

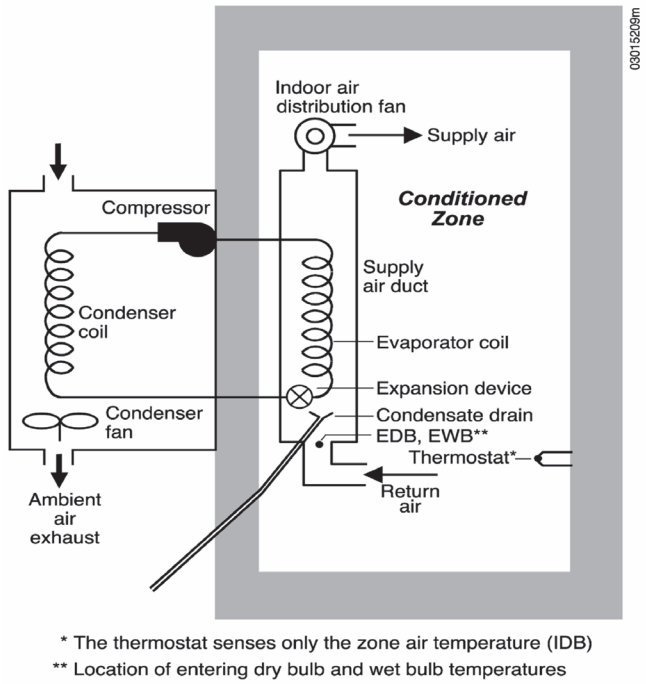

Figure 5-14 Unitary split air-conditioning system consisting of an air-cooled condensing unit and indoor evaporator coil.

simulations. This error was avoided by applying minimum outdoor air = 0.000001 ft^3/min. It is recommended to do a sensitivity test to ensure that using 0 for both of these inputs does not cause a problem.

5.3.1.10.2 Thermostat Control Strategy. The following thermostat control strategy shall be used:

- Heat = OFF
- Cool = ON IF Zone air temperature > 22.2°C (72.0°F); otherwise Cool = OFF

5.3.1.10.2.1 There shall be no zone humidity control.

Informative Note: This means that the zone humidity level will float in accordance with zone latent loads and moisture removal by the mechanical system.

5.3.1.10.2.2 The thermostat shall sense only the zone air temperature; the thermostat itself shall not sense any radiant heat transfer exchange with the interior surfaces.

5.3.1.10.2.3 The controls for this system are ideal in that the equipment shall maintain the set point exactly when it is operating and not overloaded. There are no minimum ON or OFF time-duration requirements for the unit and no hysteresis control band (e.g., there is no ON at set point +x°C or OFF at set point –y°C). If the software being tested requires input for these, the minimum values the software being tested allows shall be used.

5.3.1.10.2.4 The thermostat is nonproportional.

Informative Note: A nonproportional thermostat operates such that when the conditioned zone air temperature exceeds the thermostat cooling set point, the heat extraction rate is assumed to equal the maximum capacity of the cooling equipment corresponding to environmental conditions at the time of operation. A proportional thermostat throttles the heat extraction rate (or heat addition rate) in proportion to the difference between the zone set-point temperature and the actual zone temperature. A proportional thermostat model can be made to approximate a nonproportional thermostat model by setting a very small throttling range (the minimum allowed by the software being tested). A COP = f(PLR) curve is given in Section 5.3.1.10.4 to account for equipment cycling.

5.3.1.10.3 Full-Load Cooling System Performance Data. Use the equipment full-load capacity and full-load performance data from the table in the following list that most closely matches the input requirements of the software being tested:

- Table 5-38 lists net capacities (SI units).
- Table 5-39 lists net capacities (I-P units).
- Table 5-40 lists gross capacities (SI units).
- Table 5-41 lists gross capacities (I-P units).
- Table 5-42 lists adjusted net capacities (SI units).
- Table 5-43 lists adjusted net capacities (I-P units).

An electronic file (CE100MAP.XLS) that contains these tables is included with the accompanying electronic media.

Informative Note: Before using these tables it is recommended to read all of the informative notes included with Section 5.3.1.10.3 and the requirements of Sections 5.3.1.10.3.1 and 5.3.1.10.3.2.

Informative Note: **Various Representations of System Capacity.** The meaning of the various ways to represent system capacity is discussed below; specific terms are also defined in Section 3. These tables use outdoor dry-bulb temperature (ODB), entering dry-bulb temperature (EDB), and entering wet-bulb temperature (EWB) as independent variables for performance data; the location of EDB and EWB is shown in Figure 5-14.

Listed capacities of Tables 5-38 and 5-39 are net values after subtracting manufacturer default fan heat based on 365 W/1000 cfm, so the default fan heat for the 900 cfm fan is 329 W. For example, in Table 5-38 the listed net total capacity at Air-Conditioning, Heating and Refrigeration Institute (AHRI) rating conditions (EDB = 26.7°C, ODB = 35.0°C, EWB = 19.4°C) is 7852 W, and the assumed fan heat is 329 W. Therefore, the gross total capacity (see Table 5-40) of the system at AHRI rating conditions, including both the net total capacity and the distribution system fan heat, is 7852 + 329 = 8181 W. Similarly, the gross sensible capacity, including both the net sensible capacity and air distribution system fan heat, is 6040 + 329 = 6369 W.

The unit as described actually uses a 230 W fan. Therefore, the real net capacity is actually an adjusted net capacity, $(\text{net cap})_{adj}$, which is determined by

$$(\text{Net cap})_{adj} = (\text{Net cap})_{listed} + (\text{Default fan heat}) - (\text{Actual fan power})$$

so for the adjusted net total (Sensible + Latent) capacity at AHRI conditions and 900 cfm,

$$(\text{Net cap})_{adj} = 7852\ \text{W} + 329\ \text{W} - 230\ \text{W} = 7951\ \text{W}$$

The technique for determining adjusted net sensible capacities (see Table 5-42) is similar.

Copyrighted material licensed to Sei Ito on 2020-06-26 for licensee's use only. All rights reserved. No further reproduction or distribution is permitted. Distributed by Techstreet for ASHRAE, www.techstreet.com

Table 5-38 Equipment Full-Load Performance[a] (SI Units)

ODB (°C)	EWB (°C)	Net Total Capacity[b,c,d] (kW)	Net Sensible Capacity[b,c] (kW) at entering drybulb temperature (EDB, °C) 22.2	23.3	24.4	25.6	26.7	Compressor Power[d] (kW)	Apparatus Dew Point[d] (°C)
29.4	15.0	7.09	6.21	6.77	7.18	7.38	7.56	1.62	8.9
	17.2	7.68	5.16	5.71	6.27	6.80	7.35	1.66	11.1
	19.4	8.32	4.01	4.57	5.13	5.65	6.21	1.71	13.4
	21.7	8.97	2.87	3.40	3.96	4.48	5.04	1.76	15.8
32.2	15.0	6.91	6.12	6.68	7.03	7.21	7.41	1.69	9.1
	17.2	7.47	5.10	5.63	6.18	6.71	7.27	1.74	11.3
	19.4	8.09	3.93	4.48	5.04	5.57	6.12	1.79	13.6
	21.7	8.70	2.75	3.31	3.87	4.39	4.95	1.84	15.9
35.0	15.0	6.71	6.07	6.59	6.89	7.06	7.24	1.77	9.3
	17.2	7.27	5.01	5.54	6.09	6.62	7.18	1.81	11.4
	19.4	7.85	3.84	4.39	4.95	5.48	6.04	1.86	13.8
	21.7	8.47	2.67	3.22	3.75	4.31	4.86	1.91	16.2
37.8	15.0	6.53	5.98	6.53	6.71	6.89	7.06	1.85	9.4
	17.2	7.06	4.92	5.45	6.01	6.53	7.06	1.89	11.6
	19.4	7.62	3.75	4.31	4.83	5.39	5.95	1.94	13.9
	21.7	8.17	2.58	3.14	3.66	4.22	4.75	1.98	16.3
40.6	15.0	6.33	5.89	6.39	6.53	6.71	6.89	1.94	9.6
	17.2	6.83	4.83	5.36	5.92	6.45	6.89	1.98	11.8
	19.4	7.35	3.66	4.22	4.75	5.30	5.83	2.02	14.2
	21.7	7.91	2.49	3.02	3.57	4.13	4.66	2.06	16.6
46.1	15.0	5.92	5.71	6.04	6.21	6.36	6.50	2.11	10.0
	17.2	6.39	4.66	5.19	5.74	6.27	6.50	2.14	12.2
	19.4	6.89	3.49	4.04	4.57	5.13	5.65	2.18	14.6
	21.7	7.38	2.31	2.84	3.40	3.93	4.48	2.21	16.9

Values at ARI Rating Conditions (EDB = 26.7°C, EWB = 19.4°C, ODB = 35.0°C)

Net Total Capacity	7852 W
Airflow	0.425 m^3/s
Apparatus Dew Point	13.8 °C
Compressor Power	1858 W
Indoor Fan Power	230 W
Outdoor Fan Power	108 W
COP	3.62
Seasonal Efficiency Rating	
COP_{SEER}	3.78

Abbreviations: ODB = outdoor drybulb temperature; EWB = entering wetbulb temperature; EDB = entering drybulb temperature; ARI = Air-Conditioning and Refrigeration Institute; COP = coefficient of performance; COP_{SEER} = dimensionless Seasonal Energy Efficiency Ratio.

Notes:

[a] Performance rated at 0.425 m^3/s airflow with 7.62 m of 19.05 mm suction and 7.94 mm liquid lines.

[b] Listed net total and net sensible capacities are gross total and gross sensible capacities respectively, with manufacturer default fan heat (329 W) deducted.

[c] Where (Sensible Capacity) > (Total Capacity) indicates dry coil condition; in such case (Total Capacity) = (Sensible Capacity).

[d] Compressor kW, Apparatus Dew Point, and Net Total Capacity valid only for wet coil.

CE100MAP.xls, Table-26a!a12..j62; Aug 7, 2007

Copyrighted material licensed to Sei Ito on 2020-06-26 for licensee's use only. ALL rights reserved. No further reproduction or distribution is permitted. Distributed by Techstreet for ASHRAE, www.techstreet.com

Table 5-39 Equipment Full-Load Performance[a] (I-P Units)

ODB (°F)	EWB (°F)	Net Total Capacity[b,c,d] (kBtu/h)	Net Sensible Capacity[b,c] (kBtu/h) at entering drybulb temperature (EDB, °F) 72	74	76	78	80	Compressor Power[d] (kW)	Apparatus Dew Point[d] (°F)
85	59	24.2	21.2	23.1	24.5	25.2	25.8	1.62	48.1
	63	26.2	17.6	19.5	21.4	23.2	25.1	1.66	52.0
	67	28.4	13.7	15.6	17.5	19.3	21.2	1.71	56.1
	71	30.6	9.8	11.6	13.5	15.3	17.2	1.76	60.4
90	59	23.6	20.9	22.8	24.0	24.6	25.3	1.69	48.4
	63	25.5	17.4	19.2	21.1	22.9	24.8	1.74	52.3
	67	27.6	13.4	15.3	17.2	19.0	20.9	1.79	56.5
	71	29.7	9.4	11.3	13.2	15.0	16.9	1.84	60.7
95	59	22.9	20.7	22.5	23.5	24.1	24.7	1.77	48.7
	63	24.8	17.1	18.9	20.8	22.6	24.5	1.81	52.6
	67	26.8	13.1	15.0	16.9	18.7	20.6	1.86	56.8
	71	28.9	9.1	11.0	12.8	14.7	16.6	1.91	61.1
100	59	22.3	20.4	22.3	22.9	23.5	24.1	1.85	49.0
	63	24.1	16.8	18.6	20.5	22.3	24.1	1.89	52.9
	67	26.0	12.8	14.7	16.5	18.4	20.3	1.94	57.1
	71	27.9	8.8	10.7	12.5	14.4	16.2	1.98	61.4
105	59	21.6	20.1	21.8	22.3	22.9	23.5	1.94	49.3
	63	23.3	16.5	18.3	20.2	22.0	23.5	1.98	53.2
	67	25.1	12.5	14.4	16.2	18.1	19.9	2.02	57.5
	71	27.0	8.5	10.3	12.2	14.1	15.9	2.06	61.8
115	59	20.2	19.5	20.6	21.2	21.7	22.2	2.11	50.0
	63	21.8	15.9	17.7	19.6	21.4	22.2	2.14	53.9
	67	23.5	11.9	13.8	15.6	17.5	19.3	2.18	58.2
	71	25.2	7.9	9.7	11.6	13.4	15.3	2.21	62.5

Values at ARI Rating Conditions (EDB = 80°F, EWB = 67°F, ODB = 95°F)

Net Total Capacity	26800	Btu/h
Airflow	900	CFM
Apparatus Dew Pt	56.8	°F
Compressor Power	1858	W
Indoor Fan Power	230	W
Outdoor Fan Power	108	W
EER	12.36	(Btu/h)/W
Seasonal Efficiency Rating		
SEER	12.90	(Btu/h)/W

Abbreviations: ODB = outdoor drybulb temperature; EWB = entering wetbulb temperature; EDB = entering drybulb temperature; ARI = Air-Conditioning and Refrigeration Institute; EER = energy efficiency ration; SEER = seasonal energy efficiency ratio.

Notes:

[a] Performance rated at 900 CFM airflow with 25 feet of 3/4" suction and 5/16" liquid lines.

[b] Listed net total and net sensible capacities are gross total and gross sensible capacities respectively, with manufacturer default fan heat (1.12 kBtu/h) deducted.

[c] Where (Sensible Capacity) > (Total Capacity) indicates dry coil condition; in such case (Total Capacity) = (Sensible Capacity).

[d] Compressor kW, Apparatus Dew Point, and Net Total Capacity valid only for wet coil.

CE100MAP.xls, Table-26b!a4..j52; Aug 7, 2007

Copyrighted material licensed to Sei Ito on 2020-06-26 for licensee's use only. All rights reserved. No further reproduction or distribution is permitted. Distributed by Techstreet for ASHRAE, www.techstreet.com

Table 5-40 Equipment Full-Load Performance with Gross Capacities[a] (SI Units)

ODB (°C)	EWB (°C)	Gross Total Capacity[b,c,d] (kW)	Gross Sensible Capacity[b,c] (kW) at entering drybulb temperature (EDB, °C) 22.2	23.3	24.4	25.6	26.7	Compressor Power[d] (kW)	Apparatus Dew Point[d] (°C)
29.4	15.0	7.42	6.54	7.10	7.51	7.71	7.89	1.62	8.9
	17.2	8.01	5.49	6.04	6.60	7.13	7.68	1.66	11.1
	19.4	8.65	4.34	4.90	5.46	5.98	6.54	1.71	13.4
	21.7	9.29	3.20	3.73	4.28	4.81	5.37	1.76	15.8
32.2	15.0	7.24	6.45	7.01	7.36	7.54	7.74	1.69	9.1
	17.2	7.80	5.43	5.95	6.51	7.04	7.60	1.74	11.3
	19.4	8.42	4.26	4.81	5.37	5.90	6.45	1.79	13.6
	21.7	9.03	3.08	3.64	4.20	4.72	5.28	1.84	15.9
35.0	15.0	7.04	6.39	6.92	7.21	7.39	7.57	1.77	9.3
	17.2	7.60	5.34	5.87	6.42	6.95	7.51	1.81	11.4
	19.4	8.18	4.17	4.72	5.28	5.81	6.36	1.86	13.8
	21.7	8.80	3.00	3.55	4.08	4.64	5.19	1.91	16.2
37.8	15.0	6.86	6.31	6.86	7.04	7.21	7.39	1.85	9.4
	17.2	7.39	5.25	5.78	6.34	6.86	7.39	1.89	11.6
	19.4	7.95	4.08	4.64	5.16	5.72	6.28	1.94	13.9
	21.7	8.50	2.91	3.46	3.99	4.55	5.08	1.98	16.3
40.6	15.0	6.66	6.22	6.72	6.86	7.04	7.21	1.94	9.6
	17.2	7.16	5.16	5.69	6.25	6.77	7.21	1.98	11.8
	19.4	7.68	3.99	4.55	5.08	5.63	6.16	2.02	14.2
	21.7	8.24	2.82	3.35	3.90	4.46	4.99	2.06	16.6
46.1	15.0	6.25	6.04	6.36	6.54	6.69	6.83	2.11	10.0
	17.2	6.72	4.99	5.52	6.07	6.60	6.83	2.14	12.2
	19.4	7.21	3.82	4.37	4.90	5.46	5.98	2.18	14.6
	21.7	7.71	2.64	3.17	3.73	4.26	4.81	2.21	16.9

Values at ARI Rating Conditions (EDB = 26.7°C, EWB = 19.4°C, ODB = 35.0°C)

Gross Total Capacity	8181 W
Airflow	0.425 m^3/s
Apparatus Dew Point	13.8 °C
Compressor Power	1858 W
Indoor Fan Power	230 W
Outdoor Fan Power	108 W
COP	3.62
Seasonal Efficiency Rating	
COP_{SEER}	3.78

Abbreviations: ODB = outdoor drybulb temperature; EWB = entering wetbulb temperature; EDB = entering drybulb temperature; ARI = Air-Conditioning and Refrigeration Institute; COP = coefficient of performance; COP_{SEER} = dimensionless Seasonal Energy Efficiency Ratio.

Notes:

[a] Performance rated at 0.425 m^3/s airflow with 7.62 m of 19.05 mm suction and 7.94 mm liquid lines.

[b] Listed gross total and gross sensible capacities include manufacturer default fan heat of 329 W.

[c] Where (Sensible Capacity) > (Total Capacity) indicates dry coil condition; in such case (Total Capacity) = (Sensible Capacity).

[d] Compressor kW, Apparatus Dew Point, and Gross Total Capacity valid only for wet coil.

CE100MAP.xls, Table-26c!a4..j54; Aug 7, 2007

Copyrighted material licensed to Sei Ito on 2020-06-26 for licensee's use only. All rights reserved. No further reproduction or distribution is permitted. Distributed by Techstreet for ASHRAE, www.techstreet.com

Table 5-41 Equipment Full-Load Performance with Gross Capacities[a] (I-P Units)

ODB (°F)	EWB (°F)	Gross Total Capacity[b,c,d] (kBtu/h)	Gross Sensible Capacity[b,c] (kBtu/h) at entering drybulb temperature (EDB, °F) 72	74	76	78	80	Compressor Power[d] (kW)	Apparatus Dew Point[d] (°F)
85	59	25.3	22.3	24.2	25.6	26.3	26.9	1.62	48.1
	63	27.3	18.7	20.6	22.5	24.3	26.2	1.66	52.0
	67	29.5	14.8	16.7	18.6	20.4	22.3	1.71	56.1
	71	31.7	10.9	12.7	14.6	16.4	18.3	1.76	60.4
90	59	24.7	22.0	23.9	25.1	25.7	26.4	1.69	48.4
	63	26.6	18.5	20.3	22.2	24.0	25.9	1.74	52.3
	67	28.7	14.5	16.4	18.3	20.1	22.0	1.79	56.5
	71	30.8	10.5	12.4	14.3	16.1	18.0	1.84	60.7
95	59	24.0	21.8	23.6	24.6	25.2	25.8	1.77	48.7
	63	25.9	18.2	20.0	21.9	23.7	25.6	1.81	52.6
	67	27.9	14.2	16.1	18.0	19.8	21.7	1.86	56.8
	71	30.0	10.2	12.1	13.9	15.8	17.7	1.91	61.1
100	59	23.4	21.5	23.4	24.0	24.6	25.2	1.85	49.0
	63	25.2	17.9	19.7	21.6	23.4	25.2	1.89	52.9
	67	27.1	13.9	15.8	17.6	19.5	21.4	1.94	57.1
	71	29.0	9.9	11.8	13.6	15.5	17.3	1.98	61.4
105	59	22.7	21.2	22.9	23.4	24.0	24.6	1.94	49.3
	63	24.4	17.6	19.4	21.3	23.1	24.6	1.98	53.2
	67	26.2	13.6	15.5	17.3	19.2	21.0	2.02	57.5
	71	28.1	9.6	11.4	13.3	15.2	17.0	2.06	61.8
115	59	21.3	20.6	21.7	22.3	22.8	23.3	2.11	50.0
	63	22.9	17.0	18.8	20.7	22.5	23.3	2.14	53.9
	67	24.6	13.0	14.9	16.7	18.6	20.4	2.18	58.2
	71	26.3	9.0	10.8	12.7	14.5	16.4	2.21	62.5

Values at ARI Rating Conditions (EDB = 80°F, EWB = 67°F, ODB = 95°F)

Gross Total Capacity	27920	Btu/h
Airflow	900	CFM
Apparatus Dew Pt	56.8	°F
Compressor Power	1858	W
Indoor Fan Power	230	W
Outdoor Fan Power	108	W
EER	12.36	(Btu/h)/W
Seasonal Efficiency Rating		
SEER	12.90	(Btu/h)/W

Abbreviations: ODB = outdoor drybulb temperature; EWB = entering wetbulb temperature; EDB = entering drybulb temperature; ARI = Air-Conditioning and Refrigeration Institute; EER = energy efficiency ration; SEER = seasonal energy efficiency ratio.

Notes:

[a] Performance rated at 900 CFM airflow with 25 feet of 3/4" suction and 5/16" liquid lines.

[b] Listed gross total and gross sensible capacities include manufacturer default fan heat of 1.12 kBtu/h.

[c] Where (Sensible Capacity) > (Total Capacity) indicates dry coil condition; in such case (Total Capacity) = (Sensible Capacity).

[d] Compressor kW, Apparatus Dew Point, and Gross Total Capacity valid only for wet coil.

CE100MAP.xls, Table-26d!a4..j52; Aug 7, 2007

Copyrighted material licensed to Sei Ito on 2020-06-26 for licensee's use only.
All rights reserved. No further reproduction or distribution is permitted. Distributed by Techstreet for ASHRAE, www.techstreet.com

Table 5-42 Equipment Full-Load Performance with Adjusted Net Capacities[a] (SI Units)

ODB (°C)	EWB (°C)	Adj Net Total Capacity[b,c,d] (kW)	Adjusted Net Sensible Capacity[b,c] (kW) at entering drybulb temperature (EDB, °C) 22.2	23.3	24.4	25.6	26.7	Compressor Power[d] (kW)	Apparatus Dew Point[d] (°C)
29.4	15.0	7.19	6.31	6.87	7.28	7.48	7.66	1.62	8.9
	17.2	7.78	5.26	5.81	6.37	6.90	7.45	1.66	11.1
	19.4	8.42	4.11	4.67	5.23	5.75	6.31	1.71	13.4
	21.7	9.06	2.97	3.50	4.05	4.58	5.14	1.76	15.8
32.2	15.0	7.01	6.22	6.78	7.13	7.31	7.51	1.69	9.1
	17.2	7.57	5.20	5.72	6.28	6.81	7.37	1.74	11.3
	19.4	8.19	4.03	4.58	5.14	5.67	6.22	1.79	13.6
	21.7	8.80	2.85	3.41	3.97	4.49	5.05	1.84	15.9
35.0	15.0	6.81	6.16	6.69	6.98	7.16	7.34	1.77	9.3
	17.2	7.37	5.11	5.64	6.19	6.72	7.28	1.81	11.4
	19.4	7.95	3.94	4.49	5.05	5.58	6.13	1.86	13.8
	21.7	8.57	2.77	3.32	3.85	4.41	4.96	1.91	16.2
37.8	15.0	6.63	6.08	6.63	6.81	6.98	7.16	1.85	9.4
	17.2	7.16	5.02	5.55	6.11	6.63	7.16	1.89	11.6
	19.4	7.72	3.85	4.41	4.93	5.49	6.05	1.94	13.9
	21.7	8.27	2.68	3.23	3.76	4.32	4.85	1.98	16.3
40.6	15.0	6.43	5.99	6.49	6.63	6.81	6.98	1.94	9.6
	17.2	6.93	4.93	5.46	6.02	6.54	6.98	1.98	11.8
	19.4	7.45	3.76	4.32	4.85	5.40	5.93	2.02	14.2
	21.7	8.01	2.59	3.12	3.67	4.23	4.76	2.06	16.6
46.1	15.0	6.02	5.81	6.13	6.31	6.46	6.60	2.11	10.0
	17.2	6.49	4.76	5.29	5.84	6.37	6.60	2.14	12.2
	19.4	6.98	3.59	4.14	4.67	5.23	5.75	2.18	14.6
	21.7	7.48	2.41	2.94	3.50	4.03	4.58	2.21	16.9

Values at ARI Rating Conditions (EDB = 26.7°C, EWB = 19.4°C, ODB = 35.0°C)

Adj Net Total Capacity	7951 W
Airflow	0.4248 m^3/s
Apparatus Dew Point	13.8 °C
Compressor Power	1858 W
Indoor Fan Power	230 W
Outdoor Fan Power	108 W
COP	3.62
Seasonal Efficiency Rating	
COP_{SEER}	3.78

Abbreviations: ODB = outdoor drybulb temperature; EWB = entering wetbulb temperature; EDB = entering drybulb temperature; ARI = Air-Conditioning and Refrigeration Institute; COP = coefficient of performance; COP_{SEER} = dimensionless Seasonal Energy Efficiency Ratio.

Notes:

[a] Performance rated at 0.425 m^3/s airflow with 7.62 m of 19.05 mm suction and 7.94 mm liquid lines.

[b] Listed adjusted net total and adjusted net sensible capacities are gross capacities with actual fan heat (230 W) subtracted.

[c] Where (Sensible Capacity) > (Total Capacity) indicates dry coil condition; in such case (Total Capacity) = (Sensible Capacity).

[d] Compressor kW, Apparatus Dew Point, and Adjusted Net Total Capacity valid only for wet coil.

CE100MAP.xls, Table-26e!a4..j54; Aug 7, 2007

Copyrighted material licensed to Sei Ito on 2020-06-26 for licensee's use only. All rights reserved. No further reproduction or distribution is permitted. Distributed by Techstreet for ASHRAE, www.techstreet.com

Table 5-43 Equipment Full-Load Performance with Adjusted Net Capacities[a] (I-P Units)

ODB (°F)	EWB (°F)	Adj Net Total Capacity[b,c,d] (kBtu/h)	Adjusted Net Sensible Capacity[b,c] (kBtu/h) at entering drybulb temperature (EDB, °F) 72	74	76	78	80	Compressor Power[d] (kW)	Apparatus Dew Point[d] (°F)
85	59	24.5	21.5	23.4	24.8	25.5	26.1	1.62	48.1
	63	26.5	17.9	19.8	21.7	23.5	25.4	1.66	52.0
	67	28.7	14.0	15.9	17.8	19.6	21.5	1.71	56.1
	71	30.9	10.1	11.9	13.8	15.6	17.5	1.76	60.4
90	59	23.9	21.2	23.1	24.3	24.9	25.6	1.69	48.4
	63	25.8	17.7	19.5	21.4	23.2	25.1	1.74	52.3
	67	27.9	13.7	15.6	17.5	19.3	21.2	1.79	56.5
	71	30.0	9.7	11.6	13.5	15.3	17.2	1.84	60.7
95	59	23.2	21.0	22.8	23.8	24.4	25.0	1.77	48.7
	63	25.1	17.4	19.2	21.1	22.9	24.8	1.81	52.6
	67	27.1	13.4	15.3	17.2	19.0	20.9	1.86	56.8
	71	29.2	9.4	11.3	13.1	15.0	16.9	1.91	61.1
100	59	22.6	20.7	22.6	23.2	23.8	24.4	1.85	49.0
	63	24.4	17.1	18.9	20.8	22.6	24.4	1.89	52.9
	67	26.3	13.1	15.0	16.8	18.7	20.6	1.94	57.1
	71	28.2	9.1	11.0	12.8	14.7	16.5	1.98	61.4
105	59	21.9	20.4	22.1	22.6	23.2	23.8	1.94	49.3
	63	23.6	16.8	18.6	20.5	22.3	23.8	1.98	53.2
	67	25.4	12.8	14.7	16.5	18.4	20.2	2.02	57.5
	71	27.3	8.8	10.6	12.5	14.4	16.2	2.06	61.8
115	59	20.5	19.8	20.9	21.5	22.0	22.5	2.11	50.0
	63	22.1	16.2	18.0	19.9	21.7	22.5	2.14	53.9
	67	23.8	12.2	14.1	15.9	17.8	19.6	2.18	58.2
	71	25.5	8.2	10.0	11.9	13.7	15.6	2.21	62.5

Values at ARI Rating Conditions (EDB = 80°F, EWB = 67°F, ODB = 95°F)

Adj Net Total Capacity	27140 Btu/h
Airflow	900 CFM
Apparatus Dew Pt	56.8 °F
Compressor Power	1858 W
Indoor Fan Power	230 W
Outdoor Fan Power	108 W
EER	12.36 (Btu/h)/W
Seasonal Efficiency Rating	
SEER	12.90 (Btu/h)/W

Abbreviations: ODB = outdoor drybulb temperature; EWB = entering wetbulb temperature; EDB = entering drybulb temperature; ARI = Air-Conditioning and Refrigeration Institute; EER = energy efficiency ration; SEER = seasonal energy efficiency ratio.

Notes:

[a] Performance rated at 900 CFM airflow with 25 feet of 3/4" suction and 5/16" liquid lines.

[b] Listed adjusted net total and adjusted net sensible capacities are gross capacities with actual fan heat (785 Btu/h) subtracted.

[c] Where (Sensible Capacity) > (Total Capacity) indicates dry coil condition; in such case (Total Capacity) = (Sensible Capacity).

[d] Compressor kW, Apparatus Dew Point, and Adjusted Net Total Capacity valid only for wet coil.

CE100MAP.xls, Table-26f!a4..j52; Aug 7, 2007

Copyrighted material licensed to Sei Ito on 2020-06-26 for licensee's use only. All rights reserved. No further reproduction or distribution is permitted. Distributed by Techstreet for ASHRAE, www.techstreet.com

Informative Table 5-44 Determination of Maximum Dry-Coil EWB Using Interpolation*

EWB, °C	Adjusted Net Total Capacity, kW	Adjusted Net Sensible Capacity, kW	Compressor Power, kW
15.0	7.19	7.66	1.62
*Maximum dry EWB, 16.75***	*7.66***	*7.66***	*1.652***
17.2	7.78	7.45	1.66

* ***Informative Note:*** **Table 5-44 is informative material.**
** Italicized values are not specifically listed with Table 5-42; they are determined based on the informative note where this table is cited. Other data in this table are from Table 5-42.

Informative Table 5-45 Determination of Maximum Dry-Coil EWB Using Extrapolation*

EWB, °C	Adjusted Net Total Capacity, kW	Adjusted Net Sensible Capacity, kW	Compressor Power, kW
*Maximum dry EWB, 13.8***	*6.87***	*6.87***	*1.598***
15.0	7.19	6.31	1.62
17.2	7.78	5.26	1.66

* ***Informative Note:*** **Table 5-45 is informative material.**
** Italicized values are not specifically listed with Table 5-42; they are determined based on the informative note where this table is cited. Other data in this table are from Table 5-42.

Informative Note: **Validity of Listed Data:** Compressor kilowatts (kW) and apparatus dew point (ADP), along with net total, gross total, and adjusted net total capacities given in Tables 5-38 through 5-43, are valid only for wet coils (when dehumidification is occurring). A dry-coil condition (no dehumidification) occurs when the entering-air humidity ratio is decreased to the point where the entering-air dew-point temperature is less than the effective coil surface temperature (apparatus dew point). In Tables 5-38 through 5-43, the dry-coil condition is evident from a given table for conditions where the listed sensible capacity is greater than the corresponding total capacity. For such a dry-coil condition, total capacity equals sensible capacity.

For a given EDB and ODB, the compressor power, total capacity, sensible capacity, and apparatus dew point for wet coils change only with varying EWB. Once the coil becomes dry—which is apparent for a given EDB and ODB from the maximum EWB, where total and sensible capacities are equal—for a given EDB, compressor power and capacities remain constant with decreasing EWB [B-15].

To evaluate equipment performance for a dry-coil condition, establish the performance at the maximum EWB, where total and sensible capacities are equal. Make this determination by interpolating or extrapolating with EWB for a given EDB and ODB. For example, to determine the dry-coil compressor power for ODB/EDB = 29.4°C/26.7°C, find the maximum EWB dry-coil condition (net sensible capacity = net total capacity) using the data shown in Informative Table 5-44 (extracted from Table 5-42):

At the dry-coil condition,

- adjusted net total capacity = adjusted net sensible capacity = 7.66 kW and
- linear interpolation based on adjusted net total capacity gives
  - maximum EWB for the dry-coil condition = 16.75°C and
  - compressor power = 1.652 kW.

Note that in this example linear interpolation was used to find the maximum EWB dry-coil condition. Use of other or additional performance data points (e.g., to develop more generalized curve fits) is also possible for the purpose of interpolation or extrapolation. Also see Informative Annex B17, Section B17.1.1.2, regarding quasi-analytical solution results.

Informative Note: **Apparatus Dew Point (ADP).** ADP is defined in Section 3. Listed values of ADP may vary somewhat from those calculated using the other listed performance parameters. For more discussion of this, see Informative Annex B14.

Informative Note: **SEER.** In Tables 5-38 through 5-43, seasonal energy efficiency ratio (SEER), which is a generalized seasonal efficiency rating, is not generally a useful input for detailed simulation of mechanical systems. SEER (or COP_{SEER} in the SI versions) is useful to system designers for comparing one system to another. SEER is further discussed in Section 3 and in Informative Annex B13.

5.3.1.10.3.1 Extrapolation of Performance Data. For Cases CE100 though CE200, the software being tested shall perform extrapolations of the performance data as required by these cases, if it has that capability.

Informative Note: Cases CE100, CE110, CE130, and CE140 require some extrapolation of data for EWB < 15.0°C (<59°F). Additionally, Case CE180 may require (depending on the model) a small amount of extrapolation of data for EWB > 21.7°C (>71°F). Case CE200 may require (depending on the model) some extrapolation of data for EDB > 26.7°C (>80°F). In cases where the maximum EWB dry-coil condition occurs at EWB < 15.0°C, extrapolate the total capacity and sensible capacity to the intersection point where they are both equal. For example, use the data shown in Informative Table 5-45 (extracted from Table 5-42) to find the maximum EWB dry-coil condition for ODB/EDB = 29.4°C/22.2°C.

Linear extrapolation of the total and sensible capacities to the point where they are equal gives:

Copyrighted material licensed to Sei Ito on 2020-06-26 for licensee's use only. All rights reserved. No further reproduction or distribution is permitted. Distributed by Techstreet for ASHRAE, www.techstreet.com

- Adjusted net total capacity = adjusted net sensible capacity = 6.87 kW
- Maximum dry-coil EWB = 13.8°C
- Resulting compressor power = 1.598 kW

In this example, linear extrapolation was used to find the maximum EWB dry-coil condition. Use of other or additional performance data points (e.g., to develop more generalized curve fits) is also possible for the purpose of interpolation or extrapolation. Also see Informative Annex B17, Section B17.1.1.2, regarding quasi-analytical solution results.

5.3.1.10.3.2 Values at AHRI Rating Conditions. For programs that do not allow performance mapping of parameters specified in Tables 5-38 through 5-43, the use of input values required by the tested program at AHRI conditions, and the assumption that such values are constant, shall be permitted.

Informative Note: In Tables 5-38 through 5-43, nominal values at AHRI rating conditions are useful to system designers for comparing the capabilities of one system to those of another. Some detailed simulation programs utilize inputs for AHRI rating conditions in conjunction with the full performance maps of Tables 5-38 through 5-43.

5.3.1.10.3.3 Cooling-Coil Bypass Factor. If the software being tested does not require an input for bypass factor (BF) or automatically calculates it based on other inputs, skip the instructions in this section and proceed to Section 5.3.1.10.3.4.

BF at AHRI rating conditions is approximately $0.049 \leq BF \leq 0.080$.

If the software being tested requires this input, calculate the BF in a manner consistent with its assumptions. If the assumptions of the model being tested are not apparent from its documentation, use a value consistent with the above range and Informative Annex B14.

If the software being tested allows BF to vary as a function of EDB, EWB, and ODB, incorporate that aspect of equipment performance into the model using a consistent method for developing all points of the BF variation map.

Informative Note: Calculation techniques and uncertainty about the specified range of BF values are discussed in Informative Annex B14. Annex B14 is provided for illustrative purposes; some models may perform the calculation with minor differences in technique or assumptions or both.

5.3.1.10.3.4 Minimum Supply Air Temperature. This system is a variable-temperature system, where the supply air temperature varies with the operating conditions. If the software being tested does not require input for minimum supply air temperature, skip the instructions in this section and proceed to Section 5.3.1.10.4. If the software being tested requires an input for minimum allowable supply air temperature, then the following value shall be used:

Minimum supply air temperature ≤ 7.7°C (45.9°F)

Informative Note: The specified minimum supply air temperature is the lowest value of ADP that occurs in Cases CE100 through CE200 based on the quasi-analytical solutions for Case CE110 presented in *HVAC BESTEST* [B-16].

5.3.1.10.4 Part-Load Operation. For building energy simulation programs, defining the part-load performance in terms of a part-load curve as a plot of COP degradation factor versus part-load ratio (PLR), as shown in Figure 5-15, shall be permitted.

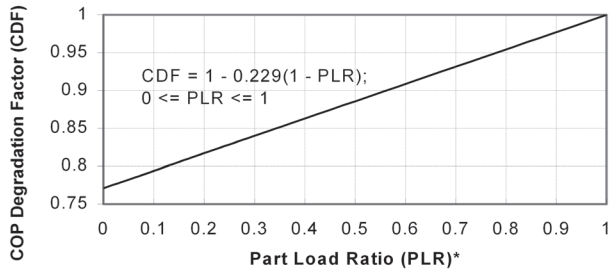

*PLR = (Net Refrigeration Effect)/(Adjusted Net Total Capacity)

Figure 5-15 Cooling equipment part-load performance (COP degradation factor versus PLR).

5.3.1.10.4.1 COP Degradation Factor. In Figure 5-15, the COP degradation factor (CDF) is a multiplier to be applied to the full-load system COP (as defined in Section 3) at a given PLR, where

COP(PLR) = [Full load COP(ODB,EWB,EDB)] × CDF(PLR)

Informative Note: This representation is based on information provided by an equipment manufacturer. It might be helpful to think of the efficiency degradation as being caused by additional start-up run time required to bring the evaporator coil temperature down to its equilibrium temperature for the times when the compressor is required to operate during an hour with part load. Simplifying assumptions in Figure 5-15 are as follows:

- There is no minimum ON/OFF time for the compressor and related fans; they may cycle ON/OFF as often as necessary to maintain the set point.
- The decrease in efficiency with increased ON/OFF cycling at very low PLR remains linear.

Informative Note: Informative Annex B13, Section B13.1, includes additional details about how Figure 5-15 was derived.

5.3.1.10.4.2 Fractional Run Time

Hourly fractional run time = PLR/CDF

Informative Note: This is consistent with an ideal ON/OFF cycling controller (see Section 5.3.1.10.2.3).

5.3.1.10.4.3 Calculation of PLR. In Figure 5-15, the PLR is calculated by Equation 5-1, where the net refrigeration effect and the adjusted net total capacity are as defined in Section 3.

PLR = (Net refrigeration effect)/(Adjusted net total capacity) (5-1)

Alternatively, the calculation of PLR shall be permitted as shown in Equation 5-2, where the gross total coil load and gross total capacity are as defined in Section 3.

PLR = (Gross total coil load)/(Gross total capacity) (5-2)

Copyrighted material licensed to Sei Ito on 2020-06-26 for licensee's use only. All rights reserved. No further reproduction or distribution is permitted. Distributed by Techstreet for ASHRAE, www.techstreet.com

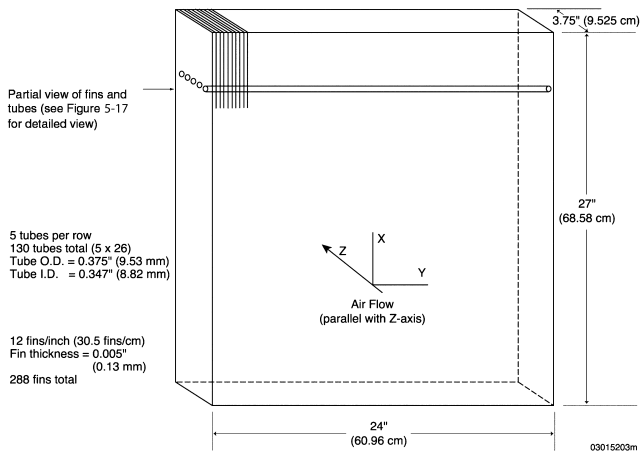

Figure 5-16 Evaporator coil overall dimensions.

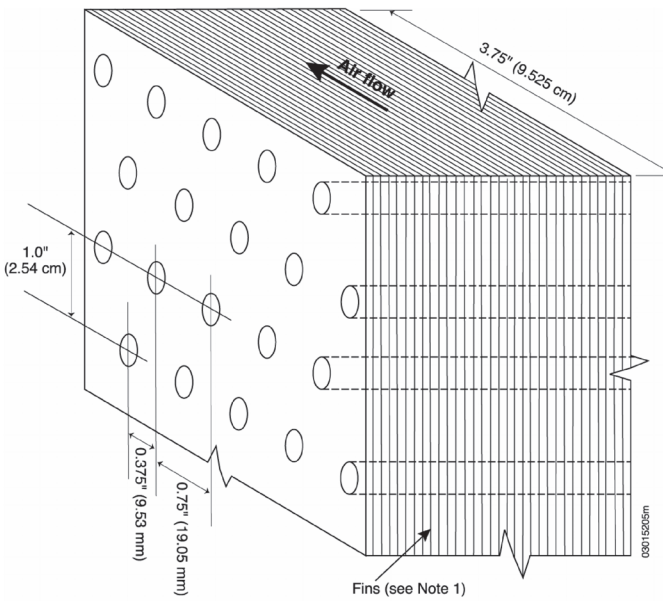

NOTE 1: Fins are actually contoured to enhance heat transfer. Greater detail regarding fin geometry is proprietary data, and therefore unavailable.

Figure 5-17 Evaporator coil detail, tube and fin geometry.

Informative Note: Demonstration of the similarity of these definitions of PLR is included in Informative Annex B13, Section B13.2.

5.3.1.10.4.4 Bypass Factor. If the software being tested utilizes the cooling coil BF, model the BF as independent of (not varying with) the PLR.

5.3.1.10.5 Evaporator Coil. If the software being tested requires input of evaporator coil geometry, the geometry of the evaporator coil included in Figures 5-16 and 5-17 and Sections 5.3.1.10.5.1 through 5.3.1.10.5.3 shall be applied.

Informative Note: Evaporator coil fins are actually contoured to enhance heat transfer, but further design details about fin geometry are proprietary and therefore unavailable.

5.3.1.10.5.1 Frontal dimensions (as specified in Figure 5-16) are as follows:

- Height = 68.6 cm (27 in.)
- Width = 61.0 cm (24 in.)
- Frontal area = 0.418 m^2 (4.50 ft^2)
- Depth = 9.53 cm (3.75 in.)

5.3.1.10.5.2 Tubes

- 130 tubes total
- (5 tubes per row, 26 rows)
- Tube outside diameter = 9.53 mm (0.375 in.)
- Tube inside diameter = 8.81 mm (0.347 in.)
- Exposed tube surface area = 2.229 m^2 (23.99 ft^2)

5.3.1.10.5.3 Fins

- 12 fins/in.
- Fin thickness = 0.13 mm (0.005 in.)
- 288 fins total
- Exposed fin surface area = 32.085 m^2 (345.36 ft^2)

5.3.1.10.6 Fans. The indoor air and outdoor condenser fans shall be modeled as specified in Sections 5.3.1.10.6.1 and 5.3.1.10.6.2, respectively.

5.3.1.10.6.1 Indoor Air Distribution Fan

- Indoor fan power = 230 W
- Airflow rate = 0.425 m^3/s = 1529 m^3/h = 900 cfm
- Total combined fan and motor efficiency = 0.5
- Total fan pressure = 271 Pa = 1.09 in. of water
- Supply air temperature rise from fan heat = 0.44C = 0.8°F
- Air distribution efficiency = 100% (adiabatic ducts)

Informative Note: For further discussion of these inputs, see Informative Annex B15, Section B15.1.

5.3.1.10.6.1.1 The draw-through indoor air distribution fan cycles ON and OFF with the compressor.

5.3.1.10.6.1.2 For calculating additional heating of the distribution air related to waste heat from the indoor distribution fan, the distribution fan motor shall be mounted in the distribution airstream so that 100% of the heat from fan energy use goes to the distribution (supply) air.

5.3.1.10.6.2 Outdoor Condenser Fan

- Outdoor fan power = 108 W.
- The draw-through outdoor condenser fan cycles ON and OFF with the compressor.

5.3.2 Space-Cooling Equipment Performance Parameter Variation Analytical Verification Tests

5.3.2.1 Additional Dry-Coil Test Cases. Additional dry-coil test cases shall be modeled as sequential revisions to the base-case model. The dry-coil cases shall have no latent load in the zone. Base cases for a given dry-coil case shall be as follows:

Case	Basis for Case
CE110	CE100
CE120	CE110
CE130	CE100
CE140	CE130

Informative Note: It is recommended to double check the Case CE100 base-case inputs and to diagnose Case CE100 results disagreements before proceeding to the other test cases.

Copyrighted material licensed to Sei Ito on 2020-06-26 for licensee's use only. All rights reserved. No further reproduction or distribution is permitted. Distributed by Techstreet for ASHRAE, www.techstreet.com

5.3.2.1.1 Case CE110: Reduced Outdoor Dry-Bulb Temperature. Case CE110 shall be modeled exactly the same as Case CE100 except that the weather data file shall be as follows:

CE110.TMY or CE110A.TM2

These data are provided with the electronic files accompanying this standard and are described in Normative Annex A1, Section A1.2.1.

5.3.2.1.2 Case CE120: Increased Thermostat Set Point. Case CE120 shall be modeled exactly the same as Case CE110 except that the thermostat control strategy shall be as follows:

Heat = OFF

Cool = ON if zone air temperature >26.7°C (80.0°F);
otherwise, Cool = OFF

All other features of the thermostat shall remain as before.

5.3.2.1.3 Case CE130: Low Part-Load Ratio. Case CE130 shall be modeled exactly the same as Case CE100 except that the internal heat gains shall be as follows:

Sensible internal gains = 270 W (922 Btu/h), continuously
(24 hours per day for the full simulation period)

Latent internal gains = 0 W (0 Btu/h), continuously
(24 hours per day for the full simulation period)

Sensible internal gains shall remain as 100% convective.

5.3.2.1.4 Case CE140: Reduced Outdoor Dry-Bulb Temperature at Low Part-Load Ratio. Case CE140 shall be modeled exactly the same as Case CE130 except that the weather data file shall be as follows:

CE110.TMY or CE110A.TM2

These data are provided with the electronic files accompanying this standard and are described in Normative Annex A1, Section A1.2.1.

5.3.2.2 Humid Zone Test Cases. The humid zone cases shall have latent load in the zone as specified in the following subsections and therefore have moisture removed by the evaporator coil. All condensed moisture is assumed to leave the system through a condensate drain. Humid zone test cases shall be developed as sequential revisions to base-case models. The base cases for a given case shall be as follows:

Case	Basis for Case
CE150	CE110
CE160	CE150
CE165	CE160
CE170	CE150
CE180	CE170
CE185	CE180
CE190	CE180
CE195	CE190
CE200	CE150

5.3.2.2.1 Case CE150: Latent Load at High Sensible Heat Ratio. Case CE150 shall be modeled exactly as Case CE110, except that the internal heat gains shall be as follows:

Sensible internal gains = 5400 W (18430 Btu/h), continuously
(24 hours per day for the full simulation period)

Latent internal gains = 1100 W (3754 Btu/h), continuously
(24 hours per day for the full simulation period)

Sensible gains remain as 100% convective.

5.3.2.2.1.1 If the software being tested requires input of water vapor mass flow rate rather than latent internal gains, then to convert the listed latent internal gains to water vapor mass flow rate, a heat of vaporization h_{fg} that approximates the value of h_{fg} for condensation at the coil applied by the software being tested shall be used.

5.3.2.2.1.2 If the software being tested requires input of total internal gains, then the sum of listed sensible and latent internal gains shall be used.

5.3.2.2.2 Case CE160: Increased Thermostat Set Point at High Sensible Heat Ratio. Case CE160 shall be modeled exactly the same as Case CE150, except that the thermostat control strategy shall be as follows:

Heat = OFF

Cool = ON IF zone air temperature >26.7°C (80.0°F);
otherwise, Cool = OFF

All other features of the thermostat shall remain as before.

5.3.2.2.3 Case CE165: Variation of Thermostat Set Point and Outdoor Dry-Bulb Temperature at High Sensible Heat Ratio. Case CE165 shall be modeled exactly the same as Case CE160 except that the thermostat control strategy and weather data shall be changed as follows.

5.3.2.2.3.1 Weather Data. The weather data file shall be as follows:

CE165.TMY or CE165A.TM2

These data are provided with the electronic files accompanying this standard and are described in Normative Annex A1, Section A1.2.1.

5.3.2.2.3.2 Thermostat Control Strategy

Heat = OFF

Cool = ON IF zone air temperature >23.3°C (74.0°F);
otherwise, Cool = OFF

All other features of the thermostat shall remain as before.

5.3.2.2.4 Case CE170: Reduced Sensible Load. Case CE170 shall be modeled exactly the same as Case CE150 except that the internal heat gains shall be as follows:

Sensible internal gains = 2100 W (7166 Btu/h), continuously
(24 hours per day for the full simulation period)

Latent internal gains = 1100 W (3754 Btu/h), continuously
(24 hours per day for the full simulation period).

Sensible gains shall remain as 100% convective.

Copyrighted material licensed to Sei Ito on 2020-06-26 for licensee's use only.
All rights reserved. No further reproduction or distribution is permitted. Distributed by Techstreet for ASHRAE, www.techstreet.com

5.3.2.2.4.1 If the software being tested requires input of water vapor mass flow rate rather than latent internal gains, then to convert the listed latent internal gains to water vapor mass flow rate, a heat of vaporization h_{fg} that approximates the value of h_{fg} for condensation at the coil applied by the software being tested shall be used.

5.3.2.2.4.2 If the software being tested requires input of total internal gains, the sum of listed sensible and latent internal gains shall be used.

5.3.2.2.5 Case CE180: Increased Latent Load. Case CE180 shall be modeled exactly the same as Case CE170 except that the internal heat gains shall be as follows:

Sensible internal gains = 2100 W (7166 Btu/h), continuously (24 hours per day for the full simulation period)

Latent internal gains = 4400 W (15018 Btu/h), continuously (24 hours per day for the full simulation period).

Sensible gains shall remain as 100% convective.

5.3.2.2.5.1 If the software being tested requires input of water vapor mass flow rate rather than latent internal gains, then to convert the listed latent internal gains to water vapor mass flow rate, a heat of vaporization h_{fg} that approximates the value of h_{fg} for condensation at the coil applied by the software being tested shall be used.

5.3.2.2.5.2 If the software being tested requires input of total internal gains, the sum of listed sensible and latent internal gains shall be used.

5.3.2.2.6 Case CE185: Increased Outdoor Dry-Bulb Temperature at Low Sensible Heat Ratio. Case CE185 shall be modeled exactly the same as Case CE180 except that the weather data file shall be as follows:

CE100.TMY or CE100A.TM2

These data are provided with the electronic files accompanying this standard and are described in Normative Annex A1, Section A1.2.1.

5.3.2.2.7 Case CE190: Low Part-Load Ratio at Low Sensible Heat Ratio. Case CE190 shall be modeled exactly the same as Case CE180 except that the internal heat gains shall be as follows:

Sensible internal gains = 270 W (922 Btu/h), continuously (24 hours per day for the full simulation period)

Latent internal gains = 550 W (1877 Btu/h), continuously (24 hours per day for the full simulation period)

Sensible gains remain as 100% convective.

5.3.2.2.7.1 If the software being tested requires input of water vapor mass flow rate rather than latent internal gains, then to convert the listed latent internal gains to water vapor mass flow rate, a heat of vaporization h_{fg} that approximates the value of h_{fg} for condensation at the coil applied by the software being tested shall be used.

5.3.2.2.7.2 If the software being tested requires input of total internal gains, the sum of listed sensible and latent internal gains shall be used.

5.3.2.2.8 Case CE195: Increased Outdoor Dry-Bulb Temperature at Low Sensible Heat Ratio and Low Part-Load Ratio. Case CE195 shall be modeled exactly the same as Case CE190 except that the weather data file shall be as follows:

CE100.TMY or CE100A.TM2

These data are provided with the electronic files accompanying this standard and are described in Normative Annex A1, Section A1.2.1.

5.3.2.2.9 Case CE200: Full-Load Test at AHRI Conditions. Case CE200 shall be modeled exactly the same as Case CE150 except for the following changes.

Informative Note: This case compares simulated performance of mechanical equipment to the manufacturer's listed performance at full load and at AHRI-specified operating conditions.

5.3.2.2.9.1 Weather Data. The weather data file shall be as follows:

CE200.TMY or CE200A.TM2

These data are provided with the electronic files accompanying this standard and are described in Normative Annex A1, Section A1.2.1.

5.3.2.2.9.2 Internal Heat Gains. The internal gains shall be as follows:

Sensible internal gains = 6120 W (20890 Btu/h), continuously (24 hours per day for the full simulation period).

Latent internal gains = 1817 W (6200 Btu/h), continuously (24 hours per day for the full simulation period)

Sensible gains shall remain as 100% convective.

5.3.2.2.9.2.1 If the software being tested requires input of water vapor mass flow rate rather than latent internal gains, then to convert the listed latent internal gains to water vapor mass flow rate, a heat of vaporization h_{fg} that approximates the value of h_{fg} for condensation at the coil applied by the software being tested shall be used.

5.3.2.2.9.2.2 If the software being tested requires input of total internal gains, the sum of listed sensible and latent internal gains shall be used.

5.3.2.2.9.3 Thermostat Control Strategy

Heat = OFF

Cool = ON IF zone air temperature > 26.7°C (80.0°F); otherwise, Cool = OFF

All other features of the thermostat shall remain as before.

5.3.3 Case CE300: Comparative Test Base-Case Building and Mechanical System. Case CE300 shall be modeled as detailed in this section and its subsections.

Informative Note: CE300 is the base case for the CE300 series cases and Cases CE400 and CE500. The bulk of the work for implementing the tests of Sections 5.3.3 and 5.3.4 is assembling an accurate base-building model. It is recommended that Case CE300 inputs be double checked and disagreements in results be diagnosed before proceeding to the other cases.

Copyrighted material licensed to Sei Ito on 2020-06-26 for licensee's use only. All rights reserved. No further reproduction or distribution is permitted. Distributed by Techstreet for ASHRAE, www.techstreet.com

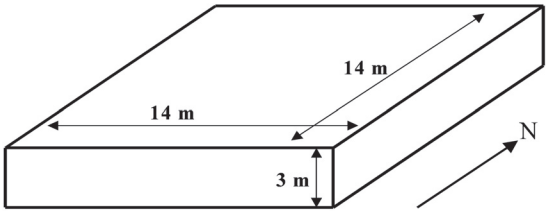

Figure 5-18 HVAC BESTEST Case CE300: Near-adiabatic envelope geometry.

5.3.3.1 Weather Data. The weather data file shall be CE300.TM2.

These data are provided with the electronic files accompanying this standard and are as described in Normative Annex A1, Section A1.2.2.

5.3.3.2 Output Requirements. Case CE300 requires the following output:

a. Annual summation, mean, and hourly integrated maximum and minimum results in accordance with Section 6.3.2.1.
b. Additional annual and hourly outputs only applicable to Case CE300 in accordance with Section 6.3.2.2.
c. General reporting requirements of Section 6.1.

5.3.3.3 Building Geometry. The base building shall be a 196 m^2 (2110 ft^2) floor area, single-story building with rectangular-prism geometry as shown in Figure 5-18. The zone air volume shall be 588 m^3 (20,765 ft^3).

5.3.3.4 Building Envelope Thermal Properties. For the building envelope, the thermal and material properties listed in Tables 5-46 (SI units) and 5-47 (I-P units) shall be used; abbreviations used in these tables are defined in Section 3.2.

Informative Note: The base-building zone is intended as a near-adiabatic test cell with the cooling load driven by user-specified scheduled internal gains.

5.3.3.4.1 If the software being tested does not allow as much insulation as specified in Table 5-46 (SI) or 5-47 (I-P), use the thickest insulation that the software permits and reduce the floor, roof, and wall areas to achieve the thermal conductance (UA) values listed in Table 5-46 or 5-47. The zone air volume shall remain at 588 m^3 (20,765 ft^3).

5.3.3.4.2 Materials of the space shall have no thermal or moisture capacitance and no moisture diffusion through them. If the software being tested requires inputs for thermal capacitance, moisture capacitance, or moisture diffusion, the minimum values the software allows shall be used.

5.3.3.4.3 If the program being tested automatically calculates air density, skip the instructions in this section and proceed to Section 5.3.3.4.4. Air density at sea level is 1.201 kg/m^3 (0.075 lb/ft^3). Use of different (nonspecified) values shall not be prohibited if there is a mathematical, physical, or logical basis for applying them. Where different values are used, they shall be applied consistently throughout the test cases. Use of nonspecified values shall be documented in the Standard Output Report specified in Normative Annex A2.

5.3.3.4.4 The floor has the same exterior film coefficient as the walls.

Informative Note: This is as if the entire zone were suspended above the ground.

5.3.3.4.5 For software that requires input of ground thermal properties, the values of Section 5.3.1.4.5 shall be used.

5.3.3.5 Infiltration. An infiltration rate of 0.0 ach shall be used for the entire simulation period.

5.3.3.6 Internal Heat Gains. Sensible and latent internal heat gains indicated in Table 5-48 shall be used.

Informative Note: Table 5-48 lists hourly values for a given period. In the first row of values, for example, the 2931 W of sensible gains and 0 W of latent gains are applied for each hour from 12:00 A.M. until 8 A.M. for the entire period from January 1 through March 10. Similarly, the second row of values indicates 2931 W of sensible gains and 366 W of latent gains for each hour from 8 A.M until 8 P.M for the same period. Values are provided in both SI and I-P units. Additionally, the corresponding fraction of a given hourly value relative to the maximum hourly value for the year is given for the convenience of users who may need to provide input in such a format. In the first row of values for sensible gains, for example, the "frac v. max" value of 0.15625 is the result of (10,000 Btu/h)/(64,000 Btu/h). Note that 64,000 Btu/h, which is the hourly sensible heat gain for the period from 2:00 P.M. until 4:00 P.M. for the period beginning April 21 and ending October 12 (and October 19 through November 5), is the maximum hourly sensible internal gain input for the year.

5.3.3.6.1 Sensible gains shall be 100% convective.

Informative Note: Zone sensible and latent internal gains are assumed to be distributed evenly throughout the zone air. These are internally generated sources of heat that are not related to the operation of the mechanical cooling system or its air distribution fan.

5.3.3.6.2 If the software being tested requires input of water vapor mass flow rate rather than latent internal gains, then to convert the listed latent internal gains to water vapor mass flow rate, a heat of vaporization h_{fg} that approximates the value of h_{fg} for condensation at the coil applied by the software being tested shall be used for each listed time period.

5.3.3.6.3 If the software being tested requires input of total internal gains, the sum of sensible and latent internal gains for each listed time period shall be used.

5.3.3.7 Opaque Surface Radiative Properties. These shall be the same as for Case CE100 as specified in Section 5.3.1.7.

5.3.3.8 Exterior Combined Radiative and Convective Surface Coefficients. These shall be the same as for Case CE100 as specified in Section 5.3.1.8.

5.3.3.9 Interior Combined Radiative and Convective Surface Coefficients. These shall be the same as for Case CE100 as specified in Section 5.3.1.9.

5.3.3.10 Mechanical System. The mechanical system specified in Figure 5-19 and in the following subsections shall be modeled.

Informative Note: The mechanical system represents a simple unitary vapor compression cooling system or, more

Copyrighted material licensed to Sei Ito on 2020-06-26 for licensee's use only. All rights reserved. No further reproduction or distribution is permitted. Distributed by Techstreet for ASHRAE, www.techstreet.com

Table 5-46 Material Specifications Case CE300 (SI Units)

EXTERIOR WALL (inside to outside)				
ELEMENT	k (W/(m·K))	Thickness (m)	U (W/(m²·K))	R (m²·K/W)
Int Surf Coef			8.290	0.121
Insulation[a]	0.00308	1.000	0.00308	325.000
Ext Surf Coef			29.300	0.034
Total air - air			0.00308	325.155
Total surf - surf			0.00308	325.000

FLOOR (inside to outside)				
ELEMENT	k (W/(m·K))	Thickness (m)	U (W/(m²·K))	R (m²·K/W)
Int Surf Coef[b]			8.290	0.121
Insulation[a]	0.00308	1.000	0.00308	325.000
Ext Surf Coef			29.300	0.034
Total air - air			0.00308	325.155
Total surf - surf			0.00308	325.000

ROOF (inside to outside)				
ELEMENT	k (W/(m·K))	Thickness (m)	U (W/(m²·K))	R (m²·K/W)
Int Surf Coef[b]			8.290	0.121
Insulation[a]	0.00308	1.000	0.00308	325.000
Ext Surf Coef			29.300	0.034
Total air - air			0.00308	325.155
Total surf - surf			0.00308	325.000

SUMMARY		
COMPONENT	AREA (m²)	UA (W/K)
Wall	168.000	0.517
Floor	196.000	0.603
Roof	196.000	0.603
Infiltration[c]		0.000
Total UA		1.722

ach	VOLUME (m³)	ALTITUDE (m)
0.00	588.0	3.0

[a] This level of insulation defines a near-adiabatic condition such that conduction gains are < 1% of the total cooling load. If your software does not allow this much insulation, then reduce the floor, roof and wall areas to achieve the listed UA values, but keep volume as listed.

[b] The interior film coefficient for floors and ceilings is a compromise between upward and downward heat flow for summer and winter.

[c] UA corresponding to infiltration based on:
ach × Volume × (specific heat of air) × (density of air at specified altitude)

precisely, a split-system, air-cooled condensing unit with an indoor evaporator coil and with an outdoor air mixing system. See Section 3 for definitions of the terminology used in this section.

5.3.3.10.1 General Information. The mechanical system shall have the following characteristics:

- 100% convective air system.
- Zone air perfectly mixed.
- An outdoor-air mixing system (as shown in Figure 5-19).
- Single-speed draw-through indoor-air distribution fan, continuous operation.
- Outdoor condenser fan, cycling ON and OFF with the compressor.
- Air-cooled condenser.
- Single-speed reciprocating compressor, R-22 refrigerant, no cylinder unloading.
- No system hot-gas bypass.
- The compressor, condenser, and condenser fan are located outside the conditioned zone.
- All moisture that condenses on the evaporator coil (latent load) leaves the system through a condensate drain.
- Crankcase heater and other auxiliary energy = 0.

Copyrighted material licensed to Sei Ito on 2020-06-26 for licensee's use only.
All rights reserved. No further reproduction or distribution is permitted. Distributed by Techstreet for ASHRAE, www.techstreet.com

Table 5-47 Material Specifications Case CE300 (I-P Units)

EXTERIOR WALL (inside to outside)				
ELEMENT	k (Btu/(h·ft·F))	Thickness (ft)	U (Btu/(h·ft^2·F))	R (h·ft^2·F/Btu)
Int Surf Coef			1.461	0.684
Insulation[a]	0.00178	3.281	0.000542	1844.202
Ext Surf Coef			5.163	0.194
Total air - air			0.000542	1845.080
Total surf - surf			0.000542	1844.202

FLOOR (inside to outside)				
ELEMENT	k (Btu/(h·ft·F))	Thickness (ft)	U (Btu/(h·ft^2·F))	R (h·ft^2·F/Btu)
Int Surf Coef[b]			1.461	0.684
Insulation[a]	0.00178	3.281	0.000542	1844.202
Ext Surf Coef			5.163	0.194
Total air - air			0.000542	1845.080
Total surf - surf			0.000542	1844.202

ROOF (inside to outside)				
ELEMENT	k (Btu/(h·ft·F))	Thickness (ft)	U (Btu/(h·ft^2·F))	R (h·ft^2·F/Btu)
Int Surf Coef[b]			1.461	0.684
Insulation[a]	0.00178	3.281	0.000542	1844.202
Ext Surf Coef			5.163	0.194
Total air - air			0.000542	1845.080
Total surf - surf			0.000542	1844.202

SUMMARY		
COMPONENT	AREA (ft^2)	UA (Btu/(h·F))
Wall	1808.337	0.980
Floor	2109.726	1.143
Roof	2109.726	1.143
Infiltration[c]		0.000
Total UA		3.267

ach	VOLUME (ft^3)	ALTITUDE (ft)	UAinf[c] (Btu/(h·F))
0.000	20765	9.84	0.000

[a] This level of insulation defines a near-adiabatic condition such that conduction gains are < 1% of the total cooling load. If your software does not allow this much insulation, then reduce the floor, roof and wall areas to achieve the listed UA values, but keep volume as listed.

[b] The interior film coefficient for floors and ceilings is a compromise between upward and downward heat flow for summer and winter.

[c] UA corresponding to infiltration based on:
ach × Volume × (specific heat of air) × (density of air at specified altitude)

5.3.3.10.2 Thermostat Control Strategy. The following thermostat control strategy shall be used:

Heat = OFF

Cool = ON IF temperature > 25.0°C (77.0°F);
otherwise, Cool = OFF

All other thermostat control characteristics shall be the same as for Case CE100 as specified in Sections 5.3.1.10.2.1 through 5.3.1.10.2.4.

5.3.3.10.3 Full-Load Cooling System Performance Data. Equipment full-load capacity and full-load performance data from Table 5-49 (SI units) or 5-50 (IP units) shall be used. An electronic file (CE300MAP.XLS) containing Tables 5-49 and 5-50 is included with the electronic files accompanying this standard.

Informative Note: Before using these tables, it is recommended to read all of the informative notes included with Section 5.3.3.10.3 and the discussion in Section 5.3.3.10.3.1.

Informative Note: Tables 5-49 and 5-50 give a sample expanded set of data for equipment full-load performance. The tables contain gross capacity data, which are the full capacities of the unit without any fan heat subtracted out. Notes that also include specific units for various quantities presented in the tables are given on the last page of each table.

Copyrighted material licensed to Sei Ito on 2020-06-26 for licensee's use only.
All rights reserved. No further reproduction or distribution is permitted. Distributed by Techstreet for ASHRAE, www.techstreet.com

Table 5-48 Case CE300 Hourly Internal Gains Schedule (SI and I-P Units)

		SENSIBLE			LATENT		
Period	Time	Watts	Btu/h	frac v. max[a]	Watts	Btu/h	frac v. max[a]
Jan. 1 thru Mar. 10	0:00 - 8:00	2931	10000	0.15625	0	0	0.00
	8:00 - 20:00	2931	10000	0.15625	366	1250	0.25
	20:00 - 24:00	2931	10000	0.15625	0	0	0.00
Mar. 11 thru Apr. 10	0:00 - 9:00	2931	10000	0.15625	0	0	0.00
	9:00 - 18:00	7034	24000	0.37500	1466	5000	1.00
	18:00 - 24:00	2931	10000	0.15625	0	0	0.00
Apr. 11[b]	0:00 - 8:00	2931	10000	0.15625	0	0	0.00
	8:00 - 20:00	2931	10000	0.15625	366	1250	0.25
	20:00 - 24:00	2931	10000	0.15625	0	0	0.00
Apr. 12 thru Apr. 20	0:00 - 8:00	2931	10000	0.15625	0	0	0.00
	8:00 - 19:00	9379	32000	0.50000	1466	5000	1.00
	19:00 - 24:00	2931	10000	0.15625	0	0	0.00
Apr. 21 thru Oct. 12	0:00 - 8:00	7034	24000	0.37500	0	0	0.00
	8:00 - 12:00	9379	32000	0.50000	1466	5000	1.00
	12:00 - 14:00	14069	48000	0.75000	1466	5000	1.00
	14:00 - 16:00	18758	64000	1.00000	1466	5000	1.00
	16:00 - 20:00	9379	32000	0.50000	1466	5000	1.00
	20:00 - 24:00	7034	24000	0.37500	0	0	0.00
Oct. 13 thru Oct. 18	0:00 - 8:00	2931	10000	0.15625	0	0	0.00
	8:00 - 16:00	9379	32000	0.50000	1466	5000	1.00
	16:00 - 24:00	2931	10000	0.15625	0	0	0.00
Oct. 19 thru Nov. 05	0:00 - 8:00	2931	10000	0.15625	0	0	0.00
	8:00 - 12:00	9379	32000	0.50000	1466	5000	1.00
	12:00 - 14:00	14069	48000	0.75000	1466	5000	1.00
	14:00 - 16:00	18758	64000	1.00000	1466	5000	1.00
	16:00 - 20:00	9379	32000	0.50000	1466	5000	1.00
	20:00 - 24:00	7034	24000	0.37500	0	0	0.00
Nov. 06 thru Dec. 31[b]	0:00 - 8:00	2931	10000	0.15625	0	0	0.00
	8:00 - 20:00	2931	10000	0.15625	366	1250	0.25
	20:00 - 24:00	2931	10000	0.15625	0	0	0.00

Note: listed values are the internal gain for each hour within the specified period.

[a] "frac v. max" is the corresponding fraction for the given hourly value relative to the maximum value for the year. This is included for convenience of users who may need to provide this input.

[b] Same schedule as for Jan. 1 through Mar. 10.

CE300intgains1.xls CE300sch!

Data are included for 2.78°C (5°F) increments of EDB and EWB and 5.56°C (10°F) increments of ODB. Data are also included for typical rating conditions of ODB/EDB/EWB = 35.00°C/26.67°C/19.44°C (95°F/80°F/67°F).

These tables use ODB, EDB, and EWB as independent variables for performance data; the locations of EDB and EWB are shown in Figure 5-19. In these tables each block of data represents an *f*(EDB, EWB) data set for a different ODB. The data set includes ranges where the HVAC equipment manufacturer recommends only limited system operation. These ranges are indicated by background shading in the upper-left and lower-right regions of the tables (see the electronic version of CE300MAP.XLS). The data set assumes that the refrigerant charge is always optimal at each listed full-load operating point. For the purpose of the test cases, assume that the refrigerant charge is always optimal.

The unit as described actually uses a 1242 W fan, so the adjusted net capacity is

$$(\text{Net cap})_{adj} = (\text{Gross cap})_{listed} - (\text{Fan power})$$

For example, for the net total (Sensible + Latent) capacity at ODB = 95°F, EDB = 75°F, and EWB = 65°F and 4000 cfm:

$$(\text{Net cap})_{adj} = 32{,}122 \text{ W} - 1242 \text{ W} = 30{,}880 \text{ W}$$

The technique for determining net sensible capacities is similar.

Informative Note: **Validity of Listed Data.** EWB given for the listed compressor kilowatts (kW) and gross capacities given in Tables 5-49 and 5-50 are valid only for wet coils (when dehumidification is occurring). A dry-coil condition—no dehumidification—occurs when the entering-air humidity ratio is decreased to the point where the entering-air dew-point temperature is less than the effective coil surface temperature (ADP). In Tables 5-49 and 5-50, the dry-coil data (indicated with *italics*) are evident for conditions where the listed sensible capacity is equal to the corresponding total capacity. For a given EDB and ODB, the compressor power, total capacity, and sensible capacity for wet coils change with varying EWB. Once the coil becomes dry, for a given EDB,

Copyrighted material licensed to Sei Ito on 2020-06-26 for licensee's use only. All rights reserved. No further reproduction or distribution is permitted. Distributed by Techstreet for ASHRAE, www.techstreet.com

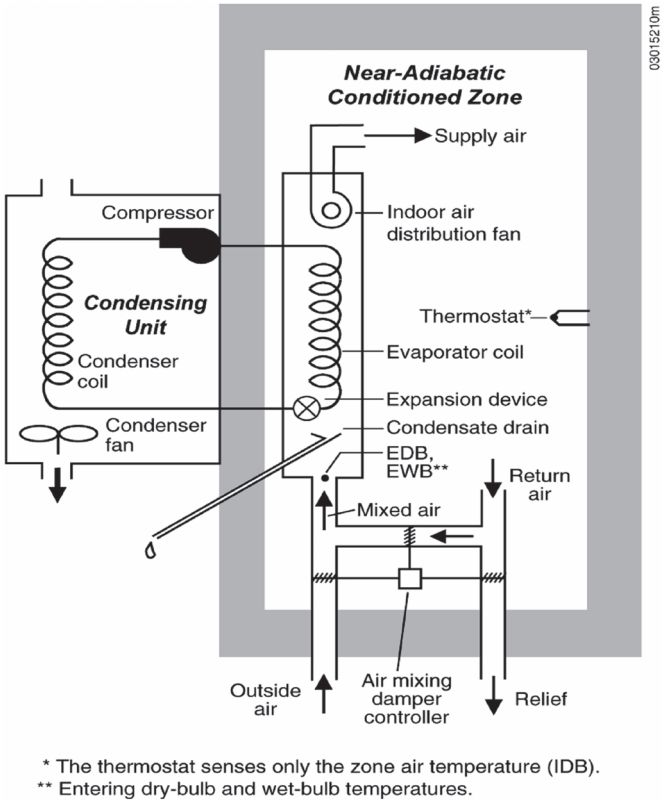

Figure 5-19 Unitary split air-conditioning system consisting of an air-cooled condensing unit and indoor evaporator coil, and with an outdoor-air mixing system.

compressor power and capacities remain constant with decreasing EWB[B-15].

For the purpose of interpolating data between listed wet-coil and dry-coil data points, it is necessary to evaluate the maximum EWB for the occurrence of the listed dry-coil data point. One method for establishing the maximum EWB where total and sensible capacities are equal is to linearly extrapolate EWB for a given EDB and ODB. For example, the data shown in Informative Table 5-51 (extracted from Table 5-49, SI units) and Informative Table 5-52 (extracted from Table 5-50, I-P units) can be used to determine the dry-coil compressor power for ODB/EDB = 35.00°C/26.67°C (95.0°F/80°F).

At the dry-coil condition,

Gross total capacity = Gross sensible capacity
= 31.05 kW thermal (105.9 kBtu/h)

where these data are listed in the row in Tables 5-49 and 5-50 (for ODB = 35.00°C [95°F]) for EWB = 15.56°C (60°F).

Linear extrapolation based on gross total capacity gives

Maximum EWB for the dry-coil condition
= 17.11°C (62.77°F)

Linear extrapolation based on gross sensible capacity gives

Maximum EWB for the dry-coil condition
= 17.00°C (62.63°F)

Therefore, maximum dry-coil EWB = 17.05°C (62.7°F).

(The difference in values of maximum EWB based on extrapolation using total capacity versus sensible capacity may be attributable to a small amount of error associated with assuming linearity in this determination, or there may be some uncertainty in the listed values. The listed compressor power data were not used for extrapolating EWB because they have fewer significant digits than the capacity data.)

5.3.3.10.3.1 Extrapolation of Performance Data. The software being tested shall perform any necessary extrapolations of performance data if it has that capability.

Informative Note: The need for doing extrapolations has been minimized by the inclusion of an expanded performance data set and by specifying reduced internal gains during cooler weather.

5.3.3.10.3.2 Cooling-Coil Bypass Factor. If the software being tested does not require an input for BF, or automatically calculates it based on other inputs, then skip the instructions in this section and proceed to Section 5.3.3.10.3.3.

BF = 0.070

Informative Note: This value was provided by the manufacturer. For this system, BF varies only with airflow rate, which is constant for these test cases.

5.3.3.10.3.3 Minimum Supply Air Temperature. This system shall be a variable temperature system where the supply air temperature varies with the operating conditions. If the software being tested does not require input for minimum supply air temperature, skip the instructions in this section and proceed to Section 5.3.3.10.4. If the software being tested requires an input for minimum allowable supply air temperature, the following value shall be used:

Minimum supply air temperature ≤ 1.46°C (34.6°F)

Informative Note: Calculation of minimum supply air temperature is presented in *HVAC BESTEST*, Volume 2[B-17].

5.3.3.10.4 Part-Load Operation Part-load operation shall be the same as for Case CE100, as specified in Section 5.3.1.10.4, with comments and exceptions as follows.

5.3.3.10.4.1 COP Degradation Factor (CDF). See Section 5.3.1.10.4.1 for requirements.

5.3.3.10.4.2 COP2 at Part Load. For calculating COP2 at part load, CDF from Figure 5-15 (Section 5.3.1.10.4.1) shall apply as follows:

(COP2 at part load) = (CDF) × (COP2 at full load)

Informative Note: When the simplifying assumption is made that continuous operation of the air distribution fan has a negligible effect on the compressor's part-load energy use, CDF applies to COP2 in a similar manner as it applies to COP (see Section 3 for definitions).

5.3.3.10.4.3 Fractional Run Time. Hourly fractional compressor and outdoor fan run time = PLR/CDF.

Informative Note: This assumption is consistent with the performance expected from an ideal ON/OFF cycling controller (see Section 5.3.1.10.2.3).

Copyrighted material licensed to Sei Ito on 2020-06-26 for licensee's use only. All rights reserved. No further reproduction or distribution is permitted. Distributed by Techstreet for ASHRAE, www.techstreet.com

Table 5-49 Equipment Full-Load Performance with Gross Capacities (SI Units)

ODB (°C)	12.78									
EWB		EDB (°C)								
(°C)		12.78	15.56	18.33	21.11	23.89	26.67	29.44	32.22	35.00
4.44	TC	*27.05*								
	SHC	*27.05*								
	kW	*6.0*								
7.22	TC	27.46	*28.81*	*30.60*						
	SHC	26.15	*28.81*	*30.60*						
	kW	6.0	*6.1*	*6.3*						
10.00	TC	29.81	29.86	*30.60*	*32.41*					
	SHC	20.54	26.27	*30.60*	*32.41*					
	kW	6.2	6.2	*6.3*	*6.4*					
12.78	TC	32.50	32.52	32.56	32.86	*34.23*				
	SHC	14.62	20.42	26.18	31.43	*34.23*				
	kW	6.4	6.4	6.4	6.4	*6.6*				
15.56	TC		35.31	35.44	35.42	35.58	36.25	*37.99*		
	SHC		14.41	20.20	25.86	31.38	35.94	*37.99*		
	kW		6.6	6.6	6.6	6.7	6.7	*6.8*		
18.33	TC			38.43	38.48	38.54	38.59	38.92	*39.91*	*41.83*
	SHC			14.14	19.83	25.49	31.04	36.18	*39.91*	*41.83*
	kW			6.9	6.9	6.9	6.9	6.9	*7.0*	*7.1*
21.11	TC				41.65	41.77	41.84	41.88	42.02	42.53
	SHC				13.74	19.40	25.00	30.53	35.85	36.36
	kW				7.1	7.1	7.1	7.1	7.2	7.2
23.89	TC					45.02	45.20	45.31	45.37	45.43
	SHC					13.27	18.87	24.42	29.91	35.26
	kW					7.4	7.4	7.4	7.4	7.4
26.67	TC						48.65	48.89	48.99	49.04
	SHC						12.73	18.29	23.79	29.20
	kW						7.7	7.7	7.7	7.7
29.44	TC							52.35	52.66	52.85
	SHC							12.13	17.63	23.09
	kW							8.0	8.0	8.0
32.22	TC								56.34	56.66
	SHC								11.50	16.95
	kW								8.3	8.3
35.00	TC									60.29
	SHC									10.84
	kW									8.6

ODB (°C)	18.33									
EWB		EDB (°C)								
(°C)		12.78	15.56	18.33	21.11	23.89	26.67	29.44	32.22	35.00
4.44	TC	*26.00*								
	SHC	*26.00*								
	kW	*6.5*								
7.22	TC	26.26	*27.73*	*29.49*						
	SHC	25.36	*27.73*	*29.49*						
	kW	6.6	*6.7*	*6.9*						
10.00	TC	28.52	28.60	*29.49*	*31.27*					
	SHC	19.83	25.56	*29.49*	*31.27*					
	kW	6.8	6.8	*6.9*	*7.1*					
12.78	TC	31.13	31.17	31.19	31.58	*33.09*				
	SHC	13.92	19.74	25.46	30.63	*33.09*				
	kW	7.1	7.1	7.1	7.1	*7.3*				
15.56	TC		33.91	34.00	34.02	34.18	34.96	*36.80*		
	SHC		13.76	19.53	25.22	30.66	34.91	*36.80*		
	kW		7.3	7.3	7.3	7.4	7.4	*7.6*		
18.33	TC			36.87	36.99	37.05	37.10	37.49	*38.68*	
	SHC			13.49	19.21	24.87	30.39	35.41	*38.68*	
	kW			7.6	7.6	7.6	7.6	7.7	*7.8*	
21.11	TC				40.06	40.15	40.25	40.27	40.46	41.05
	SHC				13.14	18.79	24.40	29.91	35.18	39.82
	kW				7.9	7.9	7.9	7.9	8.0	8.0
23.89	TC					43.35	43.52	43.61	43.67	43.76
	SHC					12.70	18.30	23.85	29.34	34.67
	kW					8.2	8.2	8.2	8.3	8.3
26.67	TC						46.88	47.04	47.19	47.25
	SHC						12.20	17.74	23.25	28.67
	kW						8.6	8.6	8.6	8.6
29.44	TC							50.50	50.77	50.91
	SHC							11.65	17.13	22.57
	kW							8.9	8.9	8.9
32.22	TC								54.28	54.60
	SHC								11.05	16.47
	kW								9.2	9.3
35.00	TC									58.24
	SHC									10.43
	kW									9.6

Copyrighted material licensed to Sei Ito on 2020-06-26 for licensee's use only.
All rights reserved. No further reproduction or distribution is permitted. Distributed by Techstreet for ASHRAE, www.techstreet.com

Table 5-49 Equipment Full-Load Performance with Gross Capacities (SI Units) (*Continued*)

ODB (°C)	23.89									
EWB		EDB (°C)								
(°C)		12.78	15.56	18.33	21.11	23.89	26.67	29.44	32.22	35.00
4.44	TC	*24.88*								
	SHC	*24.88*								
	kW	*7.1*								
7.22	TC	25.06	*26.59*	*28.31*						
	SHC	24.52	*26.59*	*28.31*						
	kW	7.1	*7.3*	*7.6*						
10.00	TC	27.20	27.29	*28.31*	*30.08*					
	SHC	19.12	24.80	*28.31*	*30.08*					
	kW	7.4	7.4	*7.6*	*7.8*					
12.78	TC	29.72	29.77	29.81	30.26	*31.86*				
	SHC	13.22	19.05	24.78	29.74	*31.86*				
	kW	7.7	7.7	7.7	7.8	*8.0*				
15.56	TC		32.44	32.48	32.52	32.74	*33.68*	*35.53*		
	SHC		13.09	18.83	24.54	29.94	*33.68*	*35.53*		
	kW		8.0	8.0	8.0	8.1	*8.2*	*8.4*		
18.33	TC			35.29	35.42	35.47	35.54	35.99	*37.39*	
	SHC			12.84	18.56	24.22	29.70	34.61	*37.39*	
	kW			8.4	8.4	8.4	8.4	8.4	*8.6*	
21.11	TC				38.38	38.48	38.56	38.57	38.83	39.51
	SHC				12.52	18.17	23.78	29.26	34.48	38.90
	kW				8.7	8.7	8.7	8.7	8.8	8.8
23.89	TC					41.59	41.75	41.85	41.89	41.97
	SHC					12.11	17.71	23.27	28.74	34.04
	kW					9.1	9.1	9.1	9.1	9.1
26.67	TC						44.96	45.17	45.30	45.37
	SHC						11.64	17.19	22.69	28.12
	kW						9.4	9.4	9.5	9.5
29.44	TC							48.48	48.76	48.92
	SHC							11.12	16.61	22.06
	kW							9.8	9.8	9.9
32.22	TC								52.09	52.49
	SHC								10.56	15.98
	kW								10.2	10.2
35.00	TC									55.98
	SHC									9.98
	kW									10.6

ODB (°C)	29.44									
EWB		EDB (°C)								
(°C)		12.78	15.56	18.33	21.11	23.89	26.67	29.44	32.22	35.00
4.44	TC	*23.74*								
	SHC	*23.74*								
	kW	*7.7*								
7.22	TC	23.80	*25.40*	*27.11*						
	SHC	23.59	*25.40*	*27.11*						
	kW	7.7	*7.9*	*8.2*						
10.00	TC	25.82	25.94	*27.11*	*28.84*					
	SHC	18.39	24.02	*27.11*	*28.84*					
	kW	8.0	8.0	*8.2*	*8.4*					
12.78	TC	28.25	28.31	28.34	28.91	*30.60*				
	SHC	12.50	18.33	24.03	28.76	*30.60*				
	kW	8.3	8.4	8.4	8.4	*8.7*				
15.56	TC		30.89	30.95	30.98	31.24	*32.39*	*34.20*		
	SHC		12.39	18.15	23.85	29.17	*32.39*	*34.20*		
	kW		8.7	8.7	8.7	8.8	*8.9*	*9.2*		
18.33	TC			33.68	33.77	33.82	33.92	34.47	*36.04*	
	SHC			12.17	17.89	23.54	29.01	33.71	*36.04*	
	kW			9.1	9.1	9.1	9.1	9.2	*9.4*	
21.11	TC				36.64	36.75	36.83	36.87	37.15	*37.97*
	SHC				11.88	17.54	23.14	28.63	33.74	*37.82*
	kW				9.5	9.5	9.5	9.5	9.5	*9.7*
23.89	TC					39.74	39.90	40.01	40.03	40.15
	SHC					11.51	17.10	22.66	28.13	33.40
	kW					9.9	9.9	9.9	9.9	9.9
26.67	TC						43.01	43.20	43.33	43.41
	SHC						11.07	16.61	22.11	27.54
	kW						10.3	10.3	10.4	10.4
29.44	TC							46.40	46.67	46.81
	SHC							10.58	16.07	21.50
	kW							10.7	10.8	10.8
32.22	TC								49.93	50.27
	SHC								10.06	15.48
	kW								11.2	11.2
35.00	TC									53.64
	SHC									9.51
	kW									11.7

Copyrighted material licensed to Sei Ito on 2020-06-26 for licensee's use only.
All rights reserved. No further reproduction or distribution is permitted. Distributed by Techstreet for ASHRAE, www.techstreet.com

Table 5-49 Equipment Full-Load Performance with Gross Capacities (SI Units) (*Continued*)

ODB (°C)	35.00									
EWB		EDB (°C)								
(°C)		12.78	15.56	18.33	21.11	23.89	26.67	29.44	32.22	35.00
7.22	TC	22.57	*24.19*	*25.85*						
	SHC	22.56	*24.19*	*25.85*						
	kW	8.6	*8.5*	*8.8*						
10.00	TC	24.42	24.56	*25.85*	*27.56*					
	SHC	17.66	23.20	*25.85*	*27.56*					
	kW	8.6	8.6	*8.8*	*9.1*					
12.78	TC	26.79	26.81	26.85	*27.56*	*29.28*				
	SHC	11.77	17.60	23.27	*27.56*	*29.28*				
	kW	9.0	9.0	9.0	*9.1*	*9.4*				
15.56	TC		29.32	29.37	29.39	29.72	*31.05*	*32.82*		
	SHC		11.68	17.46	23.15	28.33	*31.05*	*32.82*		
	kW		9.4	9.4	9.4	9.4	*9.7*	*9.9*		
18.33	TC			32.01	32.07	32.12	32.26	32.92	*34.63*	
	SHC			11.49	17.20	22.87	28.28	32.68	*34.63*	
	kW			9.8	9.8	9.8	9.9	10.0	*10.2*	
19.44*	TC						33.28			
	SHC						26.04			
	kW						10.0			
21.11	TC				34.82	34.94	35.02	35.05	35.41	*36.45*
	SHC				11.22	16.87	22.48	27.96	32.97	*36.45*
	kW				10.2	10.3	10.3	10.3	10.3	*10.5*
23.89	TC					37.81	37.96	38.07	38.10	38.28
	SHC					10.87	16.47	22.03	27.49	32.72
	kW					10.7	10.7	10.7	10.7	10.8
26.67	TC						40.96	41.15	41.29	41.33
	SHC						10.48	16.02	21.52	26.95
	kW						11.2	11.2	11.2	11.7
29.44	TC							44.23	44.49	44.64
	SHC							10.03	15.51	20.95
	kW							11.7	11.7	11.7
32.22	TC								47.66	47.92
	SHC								9.54	14.95
	kW								12.2	12.2
35.00	TC									51.18
	SHC									9.03
	kW									12.7

ODB (°C)	40.56									
EWB		EDB (°C)								
(°C)		12.78	15.56	18.33	21.11	23.89	26.67	29.44	32.22	35.00
7.22	TC	*21.34*	*22.92*	*24.56*						
	SHC	*21.34*	*22.92*	*24.56*						
	kW	*8.8*	*9.1*	*9.4*						
10.00	TC	22.95	23.16	*24.56*	*26.23*					
	SHC	16.89	22.33	*24.56*	*26.23*					
	kW	9.1	9.1	*9.4*	*9.7*					
12.78	TC	25.27	25.26	25.35	*26.24*	*27.93*				
	SHC	11.03	16.86	22.51	*26.24*	*27.93*				
	kW	9.6	9.5	9.6	*9.7*	*10.1*				
15.56	TC		27.68	27.73	27.75	28.17	*29.65*			
	SHC		10.96	16.74	22.42	27.41	*29.65*			
	kW		10.0	10.0	10.0	10.1	*10.4*			
18.33	TC			30.28	30.34	30.37	30.56	*31.39*	*33.17*	
	SHC			10.80	16.51	22.18	27.51	*31.39*	*33.17*	
	kW			10.5	10.5	10.5	10.6	*10.7*	*11.0*	
21.11	TC				32.98	33.12	33.17	33.21	33.67	*34.97*
	SHC				10.57	16.23	21.82	27.26	32.13	*34.97*
	kW				11.0	11.0	11.0	11.0	11.1	*11.3*
23.89	TC					35.85	36.01	36.08	36.13	36.37
	SHC					10.26	15.85	21.40	26.86	32.00
	kW					11.5	11.5	11.5	11.5	11.6
26.67	TC						38.86	39.07	39.18	39.22
	SHC						9.89	15.42	20.91	26.37
	kW						12.0	12.1	12.1	12.1
29.44	TC							42.00	42.24	42.38
	SHC							9.47	14.94	20.37
	kW							12.6	12.6	12.6
32.22	TC								45.27	45.55
	SHC								9.03	14.42
	kW								13.1	13.2
35.00	TC									48.65
	SHC									8.54
	kW									13.7

Copyrighted material licensed to Sei Ito on 2020-06-26 for licensee's use only.
All rights reserved. No further reproduction or distribution is permitted. Distributed by Techstreet for ASHRAE, www.techstreet.com

Table 5-49 Equipment Full-Load Performance with Gross Capacities (SI Units) (*Continued*)

ODB (°C)	46.11									
EWB		EDB (°C)								
(°C)		12.78	15.56	18.33	21.11	23.89	26.67	29.44	32.22	35.00
7.22	TC	*20.08*	*21.64*	*23.24*						
	SHC	*20.08*	*21.64*	*23.24*						
	kW	*9.3*	*9.6*	*10.0*						
10.00	TC	21.45	21.74	*23.24*	*24.87*					
	SHC	16.13	21.39	*23.24*	*24.87*					
	kW	9.6	9.6	*10.0*	*10.4*					
12.78	TC	23.68	23.69	23.80	*24.87*	*26.53*				
	SHC	10.27	16.12	21.71	*24.87*	*26.53*				
	kW	10.1	10.1	10.1	*10.4*	*10.7*				
15.56	TC		26.01	26.06	26.09	26.61	*28.22*			
	SHC		10.23	16.01	21.68	26.38	*28.22*			
	kW		10.6	10.6	10.6	10.7	*11.1*			
18.33	TC			28.52	28.57	28.58	28.84	*29.93*	*31.67*	
	SHC			10.10	15.83	21.49	26.69	*29.93*	*31.67*	
	kW			11.2	11.2	11.2	11.2	*11.5*	*11.8*	
21.11	TC				31.12	31.22	31.26	31.36	31.91	*33.42*
	SHC				9.89	15.56	21.15	26.57	31.16	*33.42*
	kW				11.7	11.7	11.7	11.8	11.9	*12.2*
23.89	TC					33.82	34.00	34.06	34.11	34.44
	SHC					9.62	15.22	20.78	26.21	31.23
	kW					12.3	12.3	12.3	12.3	12.4
26.67	TC						36.71	36.90	37.02	37.08
	SHC						9.29	14.81	20.32	25.75
	kW						12.8	12.9	12.9	12.9
29.44	TC							39.72	39.95	40.10
	SHC							8.91	14.36	19.82
	kW							13.4	13.5	13.5
32.22	TC								42.77	43.12
	SHC								8.50	13.88
	kW								14.0	14.1
35.00	TC									46.05
	SHC									8.04
	kW									14.7

Notes:
1. TC = gross total capacity, kW thermal
2. SHC = gross sensible heat capacity, kW thermal
3. kW = compressor power, kW
4. ODB = ambient dry-bulb temperature = air temperature, °C, entering condenser
5. EDB = dry-bulb temperature, °C, entering indoor coil
6. EWB = wet-bulb temperature, °C, entering indoor coil
7. Airflow rate = indoor coil airflow rate, 6796 m^3/h [4000 ft^3/min (cfm)] for all data
8. Shaded upper left cells = potential for freezing indoor coil
9. Shaded lower right cells = compressor outside operating envelope
   CANNOT RUN HERE (for prolonged operation)
10. Each point has optimum charge (R-22 charge not constant)
11. Computer model used to generate catalog data
12. Computer model based on test data
13. Computer model validated within the operating envelope of compressor
14. Computer model iterates and determines if the coil is wet or dry

Copyrighted material licensed to Sei Ito on 2020-06-26 for licensee's use only.
All rights reserved. No further reproduction or distribution is permitted. Distributed by Techstreet for ASHRAE, www.techstreet.com

Table 5-50 Equipment Full-Load Performance with Gross Capacities (I-P Units)

ODB (°F)	55									
EWB (°F)		EDB (°F)								
		55	60	65	70	75	80	85	90	95
40	TC	*92.3*								
	SHC	*92.3*								
	kW	*6.0*								
45	TC	93.7	*98.3*	*104.4*						
	SHC	89.2	*98.3*	*104.4*						
	kW	6.0	*6.1*	*6.3*						
50	TC	101.7	101.9	*104.4*	*110.6*					
	SHC	70.1	89.6	*104.4*	*110.6*					
	kW	6.2	6.2	*6.3*	*6.4*					
55	TC	110.9	110.9	111.1	112.1	*116.8*				
	SHC	49.9	69.7	89.3	107.2	*116.8*				
	kW	6.4	6.4	6.4	6.4	*6.6*				
60	TC		120.5	120.9	120.9	121.4	123.7	*129.6*		
	SHC		49.2	68.9	88.2	107.1	122.6	*129.6*		
	kW		6.6	6.6	6.6	6.7	6.7	*6.8*		
65	TC			131.1	131.3	131.5	131.7	132.8	*136.2*	*142.7*
	SHC			48.2	67.7	87.0	105.9	123.4	*136.2*	*142.7*
	kW			6.9	6.9	6.9	6.9	6.9	*7.0*	*7.1*
70	TC				142.1	142.5	142.8	142.9	143.4	145.1
	SHC				46.9	66.2	85.3	104.1	122.3	124.0
	kW				7.1	7.1	7.1	7.1	7.2	7.2
75	TC					153.6	154.2	154.6	154.8	155.0
	SHC					45.3	64.4	83.3	102.0	120.3
	kW					7.4	7.4	7.4	7.4	7.4
80	TC						166.0	166.8	167.1	167.3
	SHC						43.4	62.4	81.2	99.6
	kW						7.7	7.7	7.7	7.7
85	TC							178.6	179.7	180.3
	SHC							41.4	60.1	78.8
	kW							8.0	8.0	8.0
90	TC								192.2	193.3
	SHC								39.3	57.8
	kW								8.3	8.3
95	TC									205.7
	SHC									37.0
	kW									8.6

ODB (°F)	65									
EWB (°F)		EDB (°F)								
		55	60	65	70	75	80	85	90	95
40	TC	*88.7*								
	SHC	*88.7*								
	kW	*6.5*								
45	TC	89.6	*94.6*	*100.6*						
	SHC	86.5	*94.6*	*100.6*						
	kW	6.6	*6.7*	*6.9*						
50	TC	97.3	97.6	*100.6*	*106.7*					
	SHC	67.7	87.2	*100.6*	*106.7*					
	kW	6.8	6.8	*6.9*	*7.1*					
55	TC	106.2	106.4	106.4	107.7	*112.9*				
	SHC	47.5	67.4	86.9	104.5	*112.9*				
	kW	7.1	7.1	7.1	7.1	*7.3*				
60	TC		115.7	116.0	116.1	116.6	119.3	*125.5*		
	SHC		47.0	66.6	86.0	104.6	119.1	*125.5*		
	kW		7.3	7.3	7.3	7.4	7.4	*7.6*		
65	TC			125.8	126.2	126.4	126.6	127.9	*132.0*	
	SHC			46.0	65.6	84.9	103.7	120.8	*132.0*	
	kW			7.6	7.6	7.6	7.6	7.7	*7.8*	
70	TC				136.7	137.0	137.3	137.4	138.0	140.1
	SHC				44.8	64.1	83.3	102.1	120.0	135.8
	kW				7.9	7.9	7.9	7.9	8.0	8.0
75	TC					147.9	148.5	148.8	149.0	149.3
	SHC					43.3	62.4	81.4	100.1	118.3
	kW					8.2	8.2	8.2	8.3	8.3
80	TC						159.9	160.5	161.0	161.2
	SHC						41.6	60.5	79.3	97.8
	kW						8.6	8.6	8.6	8.6
85	TC							172.3	173.2	173.7
	SHC							39.7	58.4	77.0
	kW							8.9	8.9	8.9
90	TC								185.2	186.3
	SHC								37.7	56.2
	kW								9.2	9.3
95	TC									198.7
	SHC									35.6
	kW									9.6

Copyrighted material licensed to Sei Ito on 2020-06-26 for licensee's use only.
All rights reserved. No further reproduction or distribution is permitted. Distributed by Techstreet for ASHRAE, www.techstreet.com

Table 5-50 Equipment Full-Load Performance with Gross Capacities (I-P Units) (*Continued*)

ODB (°F)	75									
EWB (°F)		EDB (°F)								
		55	60	65	70	75	80	85	90	95
40	TC	*84.9*								
	SHC	*84.9*								
	kW	*7.1*								
45	TC	85.5	*90.7*	*96.6*						
	SHC	83.7	*90.7*	*96.6*						
	kW	7.1	*7.3*	*7.6*						
50	TC	92.8	93.1	*96.6*	*102.6*					
	SHC	65.2	84.6	*96.6*	*102.6*					
	kW	7.4	7.4	*7.6*	*7.8*					
55	TC	101.4	101.6	101.7	103.2	*108.7*				
	SHC	45.1	65.0	84.5	101.5	*108.7*				
	kW	7.7	7.7	7.7	7.8	*8.0*				
60	TC		110.7	110.8	110.9	111.7	*114.9*	*121.2*		
	SHC		44.7	64.3	83.7	102.2	*114.9*	*121.2*		
	kW		8.0	8.0	8.0	8.1	*8.2*	*8.4*		
65	TC			120.4	120.8	121.0	121.3	122.8	*127.6*	
	SHC			43.8	63.3	82.6	101.3	118.1	*127.6*	
	kW			8.4	8.4	8.4	8.4	8.4	*8.6*	
70	TC				131.0	131.3	131.6	131.6	132.5	134.8
	SHC				42.7	62.0	81.1	99.8	117.7	132.7
	kW				8.7	8.7	8.7	8.7	8.8	8.8
75	TC					141.9	142.4	142.8	142.9	143.2
	SHC					41.3	60.4	79.4	98.1	116.1
	kW					9.1	9.1	9.1	9.1	9.1
80	TC						153.4	154.1	154.5	154.8
	SHC						39.7	58.6	77.4	95.9
	kW						9.4	9.4	9.5	9.5
85	TC							165.4	166.4	166.9
	SHC							37.9	56.7	75.3
	kW							9.8	9.8	9.9
90	TC								177.7	179.1
	SHC								36.0	54.5
	kW								10.2	10.2
95	TC									191.0
	SHC									34.0
	kW									10.6

ODB (°F)	85									
EWB (°F)		EDB (°F)								
		55	60	65	70	75	80	85	90	95
40	TC	*81.0*								
	SHC	*81.0*								
	kW	*7.7*								
45	TC	81.2	*86.7*	*92.5*						
	SHC	80.5	*86.7*	*92.5*						
	kW	7.7	*7.9*	*8.2*						
50	TC	88.1	88.5	*92.5*	*98.4*					
	SHC	62.7	82.0	*92.5*	*98.4*					
	kW	8.0	8.0	*8.2*	*8.4*					
55	TC	96.4	96.6	96.7	98.6	*104.4*				
	SHC	42.6	62.5	82.0	98.1	*104.4*				
	kW	8.3	8.4	8.4	8.4	*8.7*				
60	TC		105.4	105.6	105.7	106.6	*110.5*	*116.7*		
	SHC		42.3	61.9	81.4	99.5	*110.5*	*116.7*		
	kW		8.7	8.7	8.7	8.8	*8.9*	*9.2*		
65	TC			114.9	115.2	115.4	115.7	117.6	*123.0*	
	SHC			41.5	61.0	80.3	99.0	115.0	*123.0*	
	kW			9.1	9.1	9.1	9.1	9.2	*9.4*	
70	TC				125.0	125.4	125.6	125.8	126.8	129.6
	SHC				40.5	59.8	78.9	97.7	115.1	129.0
	kW				9.5	9.5	9.5	9.5	9.5	9.7
75	TC					135.6	136.1	136.5	136.6	137.0
	SHC					39.3	58.4	77.3	96.0	114.0
	kW					9.9	9.9	9.9	9.9	9.9
80	TC						146.7	147.4	147.9	148.1
	SHC						37.8	56.7	75.4	94.0
	kW						10.3	10.3	10.4	10.4
85	TC							158.3	159.2	159.7
	SHC							36.1	54.8	73.4
	kW							10.7	10.8	10.8
90	TC								170.4	171.5
	SHC								34.3	52.8
	kW								11.2	11.2
95	TC									183.0
	SHC									32.4
	kW									11.7

Copyrighted material licensed to Sei Ito on 2020-06-26 for licensee's use only. All rights reserved. No further reproduction or distribution is permitted. Distributed by Techstreet for ASHRAE, www.techstreet.com

Table 5-50 Equipment Full-Load Performance with Gross Capacities (I-P Units) (*Continued*)

ODB (°F)	95									
EWB (°F)		EDB (°F)								
		55	60	65	70	75	80	85	90	95
45	TC	77.0	*82.5*	*88.2*						
	SHC	77.0	*82.5*	*88.2*						
	kW	8.6	*8.5*	*8.8*						
50	TC	83.3	83.8	*88.2*	*94.0*					
	SHC	60.2	79.2	*88.2*	*94.0*					
	kW	8.6	8.6	*8.8*	*9.1*					
55	TC	91.4	91.5	91.6	*94.0*	*99.9*				
	SHC	40.2	60.1	79.4	*94.0*	*99.9*				
	kW	9.0	9.0	9.0	*9.1*	*9.4*				
60	TC		100.0	100.2	100.3	101.4	*105.9*	*112.0*		
	SHC		39.9	59.6	79.0	96.7	*105.9*	*112.0*		
	kW		9.4	9.4	9.4	9.4	*9.7*	*9.9*		
65	TC			109.2	109.4	109.6	110.1	112.3	*118.1*	
	SHC			39.2	58.7	78.0	96.5	111.5	*118.1*	
	kW			9.8	9.8	9.8	9.9	10.0	*10.2*	
67	TC						113.5			
	SHC						88.9			
	kW						10.0			
70	TC				118.8	119.2	119.5	119.6	120.8	*124.4*
	SHC				38.3	57.6	76.7	95.4	112.5	*124.4*
	kW				10.2	10.3	10.3	10.3	10.3	*10.5*
75	TC					129.0	129.5	129.9	130.0	130.6
	SHC					37.1	56.2	75.1	93.8	111.6
	kW					10.7	10.7	10.7	10.7	10.8
80	TC						139.8	140.4	140.9	141.0
	SHC						35.8	54.6	73.4	91.9
	kW						11.2	11.2	11.2	11.7
85	TC							150.9	151.8	152.3
	SHC							34.2	52.9	71.5
	kW							11.7	11.7	11.7
90	TC								162.6	163.5
	SHC								32.5	51.0
	kW								12.2	12.2
95	TC									174.6
	SHC									30.8
	kW									12.7

ODB (°F)	105									
EWB (°F)		EDB (°F)								
		55	60	65	70	75	80	85	90	95
45	TC	*72.8*	*78.2*	*83.8*						
	SHC	*72.8*	*78.2*	*83.8*						
	kW	*8.8*	*9.1*	*9.4*						
50	TC	78.3	79.0	*83.8*	*89.5*					
	SHC	57.6	76.2	*83.8*	*89.5*					
	kW	9.1	9.1	*9.4*	*9.7*					
55	TC	86.2	86.2	86.5	*89.5*	*95.3*				
	SHC	37.6	57.5	76.8	*89.5*	*95.3*				
	kW	9.6	9.5	9.6	*9.7*	*10.1*				
60	TC		94.4	94.6	94.7	96.1	*101.2*			
	SHC		37.4	57.1	76.5	93.5	*101.2*			
	kW		10.0	10.0	10.0	10.1	*10.4*			
65	TC			103.3	103.5	103.6	104.3	*107.1*	*113.2*	
	SHC			36.8	56.3	75.7	93.9	*107.1*	*113.2*	
	kW			10.5	10.5	10.5	10.6	*10.7*	*11.0*	
70	TC				112.5	113.0	113.2	113.3	114.9	*119.3*
	SHC				36.0	55.4	74.4	93.0	109.6	*119.3*
	kW				11.0	11.0	11.0	11.0	11.1	*11.3*
75	TC					122.3	122.9	123.1	123.3	124.1
	SHC					35.0	54.1	73.0	91.7	109.2
	kW					11.5	11.5	11.5	11.5	11.6
80	TC						132.6	133.3	133.7	133.8
	SHC						33.7	52.6	71.3	90.0
	kW						12.0	12.1	12.1	12.1
85	TC							143.3	144.1	144.6
	SHC							32.3	51.0	69.5
	kW							12.6	12.6	12.6
90	TC								154.4	155.4
	SHC								30.8	49.2
	kW								13.1	13.2
95	TC									166.0
	SHC									29.1
	kW									13.7

Copyrighted material licensed to Sei Ito on 2020-06-26 for licensee's use only.
All rights reserved. No further reproduction or distribution is permitted. Distributed by Techstreet for ASHRAE, www.techstreet.com

Table 5-50 Equipment Full-Load Performance with Gross Capacities (I-P Units) (*Continued*)

ODB (°F)	115									
EWB (°F)		EDB (°F)								
		55	60	65	70	75	80	85	90	95
45	TC	*68.5*	*73.8*	*79.3*						
	SHC	*68.5*	*73.8*	*79.3*						
	kW	*9.3*	*9.6*	*10.0*						
50	TC	73.2	74.2	*79.3*	*84.9*					
	SHC	55.0	73.0	*79.3*	*84.9*					
	kW	9.6	9.6	*10.0*	*10.4*					
55	TC	80.8	80.8	81.2	*84.9*	*90.5*				
	SHC	35.1	55.0	74.1	*84.9*	*90.5*				
	kW	10.1	10.1	10.1	*10.4*	*10.7*				
60	TC		88.7	88.9	89.0	90.8	*96.3*			
	SHC		34.9	54.6	74.0	90.0	*96.3*			
	kW		10.6	10.6	10.6	10.7	*11.1*			
65	TC			97.3	97.5	97.5	98.4	*102.1*	*108.0*	
	SHC			34.5	54.0	73.3	91.1	*102.1*	*108.0*	
	kW			11.2	11.2	11.2	11.2	*11.5*	*11.8*	
70	TC				106.2	106.5	106.7	107.0	108.9	*114.0*
	SHC				33.8	53.1	72.2	90.6	106.3	*114.0*
	kW				11.7	11.7	11.7	11.8	11.9	*12.2*
75	TC					115.4	116.0	116.2	116.4	117.5
	SHC					32.8	51.9	70.9	89.4	106.5
	kW					12.3	12.3	12.3	12.3	12.4
80	TC						125.3	125.9	126.3	126.5
	SHC						31.7	50.5	69.3	87.9
	kW						12.8	12.9	12.9	12.9
85	TC							135.5	136.3	136.8
	SHC							30.4	49.0	67.6
	kW							13.4	13.5	13.5
90	TC								145.9	147.1
	SHC								29.0	47.4
	kW								14.0	14.1
95	TC									157.1
	SHC									27.4
	kW									14.7

Notes:
1. TC = gross total capacity, kBtu/h
2. SHC = gross sensible heat capacity, kBtu/h
3. kW = compressor power, kW
4. ODB = ambient dry-bulb temperature = air temperature, °F, entering condenser
5. EDB = dry-bulb temperature, °F, entering indoor coil
6. EWB = wet-bulb temperature, °F, entering indoor coil
7. CFM = indoor coil airflow rate in ft^3/min (cfm), 4000 cfm for all data
8. Shaded upper left cells = potential for freezing indoor coil
9. Shaded lower right cells = compressor outside operating envelope
   CANNOT RUN HERE (for prolonged operation)
10. Each point has optimum charge (R-22 charge not constant)
11. Computer model used to generate catalog data
12. Computer model based on test data
13. Computer model validated within the operating envelope of compressor
14. Computer model iterates and determines if the coil is wet or dry

Copyrighted material licensed to Sei Ito on 2020-06-26 for licensee's use only.
All rights reserved. No further reproduction or distribution is permitted. Distributed by Techstreet for ASHRAE, www.techstreet.com

Informative Table 5-51 Determination of Maximum Dry-Coil EWB Using Extrapolation (SI Units)*

EWB, °C	Gross Total Capacity, kW thermal	Gross Sensible Capacity, kW thermal	Compressor Power, kW
*17.11 (on TC); 17.00 (on SHC)***	31.05	31.05	9.7
18.33	32.26	28.28	9.9
21.11	35.02	22.48	10.3

* ***Informative Note:*** Table 5-51 is informative material.

** Italicized values are not specifically listed with the original performance data; they are determined based on the informative note where this table is cited. Data in normal font are from the original performance data.

Informative Table 5-52 Determination of Maximum Dry-Coil EWB Using Extrapolation (I-P Units)*

EWB, °F	Gross Total Capacity, kBtu/h	Gross Sensible Capacity, kBtu/h	Compressor Power, kW
*62.77 (on TC); 62.63 (on SHC)***	105.9	105.9	9.7
65	110.1	96.5	9.9
70	119.5	76.7	10.3

* ***Informative Note:*** Table 5-52 is informative material.

** Italicized values are not specifically listed with the original performance data; they are determined based on the informative note where this table is cited. Data in normal font are from the original performance data.

5.3.3.10.4.4 Calculations of PLR. See Section 5.3.1.10.4.3 for requirements.

Informative Note: Because there is a continuously operating indoor air fan in the CE300 and CE400 series cases, the definition of PLR (see Section 5.3.1.10.4.3) applying gross total evaporator coil load and gross total capacity is more convenient to apply. If the software being tested is defining PLR based on net refrigeration effect and adjusted net capacity, then for the CE300 and CE400 series cases, indoor air distribution fan operation for times when the evaporator coil is not removing heat is still considered in the overall simulation. Indoor air distribution fan operation for times when the evaporator coil is not removing heat does not affect the net refrigeration effect or the adjusted net total capacity.

5.3.3.10.4.5 For Cases CE300 through CE440, the CDF (defined in Section 5.3.1.10.4.1) shall not be applicable to the continuously operating indoor air distribution fan energy consumption.

5.3.3.10.4.6 Bypass Factor. See Section 5.3.1.10.4.4 for requirements.

5.3.3.10.5 Fans

5.3.3.10.5.1 Indoor Air Distribution Fan. The indoor distribution fan shall be a draw-through fan with the following operating characteristics:

- Airflow rate = 1.888 m^3/s = 6796 m^3/h = 4000 cfm
- Indoor fan electric power = 1242 W
- Indoor fan mechanical shaft power = 1167 W (1.565 brake horsepower [BHP])
- External static fan pressure = 74.7 Pa = 0.3 in. of water (water gage)
- Fan static efficiency = 0.121
- Motor/drive efficiency = 0.940
- Supply air temperature rise from fan heat = 0.54°C = 0.97°F
- Air distribution efficiency = 100% (adiabatic ducts)

Informative Note: For further discussion of these inputs, see Informative Annex B15, Section B15.2.

5.3.3.10.5.1.1 The draw-through indoor air distribution fan shall operate continuously at 4000 cfm (6796.0 m^3/h) for the entire simulation period.

5.3.3.10.5.1.2 For calculating additional heating of the distribution air related to waste heat from the indoor distribution fan, the distribution fan motor shall be mounted in the distribution airstream so that 100% of the heat from fan energy use goes to the distribution (supply) air.

5.3.3.10.5.2 Outdoor Condenser Fan

Outdoor fan power = 930 W

The draw-through outdoor condenser fan shall cycle ON and OFF with the compressor.

5.3.3.10.6 Outdoor Air. Outdoor air shall be 15% of total supply air, and return air shall be 85% of total supply air, continuously. That is, of the 4000 cfm (6796.0 m^3/h) of mixed supply air, 600 cfm (1019.4 m^3/h) shall be outdoor air and 3400 cfm (5776.6 m^3/h) shall be return air. As fresh air is introduced from the outside, a corresponding amount of zone air shall exit through the relief damper (shown in Figure 5-19).

5.3.4 Space-Cooling Equipment Performance Comparative Tests. Sequential variations shall be modeled as specified in the following subsections.

Informative Note: It is recommended to double check the Case CE300 base-case inputs and to diagnose Case CE300 result disagreements before proceeding to the other test cases.

5.3.4.1 Basic Tests (CE300 Series). Case CE300 shall be the base case for all test cases in this series.

5.3.4.1.1 Case CE310: High Latent Gains. Case CE310 shall be modeled exactly the same as Case CE300 except for the following changes.

5.3.4.1.1.1 Internal Heat Gains. The latent internal heat gains shall be scheduled according to Table 5-53. Only

Copyrighted material licensed to Sei Ito on 2020-06-26 for licensee's use only. All rights reserved. No further reproduction or distribution is permitted. Distributed by Techstreet for ASHRAE, www.techstreet.com

Table 5-53 Case CE310 Hourly Internal Gains Schedule (SI and I-P Units)

		SENSIBLE			LATENT		
Period	Time	Watts	Btu/h	frac v. max[a]	Watts	Btu/h	frac v. max[a]
Jan. 1 thru Mar. 10	0:00 - 8:00	2931	10000	0.15625	0	0	0.00000
	8:00 - 20:00	2931	10000	0.15625	1466	5000	0.15625
	20:00 - 24:00	2931	10000	0.15625	0	0	0.00000
Mar. 11 thru Apr. 10	0:00 - 9:00	2931	10000	0.15625	0	0	0.00000
	9:00 - 18:00	7034	24000	0.37500	7034	24000	0.75000
	18:00 - 24:00	2931	10000	0.15625	0	0	0.00000
Apr. 11[b]	0:00 - 8:00	2931	10000	0.15625	0	0	0.00000
	8:00 - 20:00	2931	10000	0.15625	1466	5000	0.15625
	20:00 - 24:00	2931	10000	0.15625	0	0	0.00000
Apr. 12 thru Apr. 20	0:00 - 8:00	2931	10000	0.15625	0	0	0.00000
	8:00 - 19:00	9379	32000	0.50000	7034	24000	0.75000
	19:00 - 24:00	2931	10000	0.15625	0	0	0.00000
Apr. 21 thru Oct. 12	0:00 - 8:00	7034	24000	0.37500	7034	24000	0.75000
	8:00 - 12:00	9379	32000	0.50000	7034	24000	0.75000
	12:00 - 14:00	14069	48000	0.75000	9379	32000	1.00000
	14:00 - 16:00	18758	64000	1.00000	9379	32000	1.00000
	16:00 - 20:00	9379	32000	0.50000	7034	24000	0.75000
	20:00 - 24:00	7034	24000	0.37500	7034	24000	0.75000
Oct. 13 thru Oct. 18	0:00 - 8:00	2931	10000	0.15625	0	0	0.00000
	8:00 - 16:00	9379	32000	0.50000	7034	24000	0.75000
	16:00 - 24:00	2931	10000	0.15625	0	0	0.00000
Oct. 19 thru Nov. 05	0:00 - 8:00	2931	10000	0.15625	1466	5000	0.15625
	8:00 - 12:00	9379	32000	0.50000	7034	24000	0.75000
	12:00 - 14:00	14069	48000	0.75000	9379	32000	1.00000
	14:00 - 16:00	18758	64000	1.00000	9379	32000	1.00000
	16:00 - 20:00	9379	32000	0.50000	7034	24000	0.75000
	20:00 - 24:00	7034	24000	0.37500	7034	24000	0.75000
Nov. 06 thru Dec. 31[b]	0:00 - 8:00	2931	10000	0.15625	0	0	0.00000
	8:00 - 20:00	2931	10000	0.15625	1466	5000	0.15625
	20:00 - 24:00	2931	10000	0.15625	0	0	0.00000

Note: listed values are the internal gain for each hour within the specified period.

[a] "frac v. max" is the corresponding fraction for the given hourly value relative to the maximum value for the year. This is included for convenience of users who may need to provide this input.

[b] Same schedule as for Jan. 1 through Mar. 10.

CE300intgains1.xls CE310sch!

the latent internal gains shall be changed; sensible internal gains shown here shall be the same as for Case CE300. All other modeling details for internal gains shall be exactly the same as Case CE300 as specified in Sections 5.3.3.6.1 through 5.3.3.6.3.

5.3.4.1.1.2 Output Requirements. Case CE310 requires the following output:

a. Annual summation, mean, and hourly integrated maximum and minimum results in accordance with the requirements of Section 6.3.2.1
b. General reporting requirements of Section 6.1

5.3.4.1.2 Case CE320: High Infiltration. Case CE320 shall be modeled exactly the same as Case CE300 except for the following changes.

5.3.4.1.2.1 Infiltration Schedule. The infiltration rate shall be scheduled as follows:

Time Period	Infiltration Rate
Jan. 1–April 20	1.734 ach (1019.4 m^3/h, 600 cfm)
April 21–Oct. 12	
00:00 to 08:00	1.734 ach (1019.4 m^3/h, 600 cfm)
08:00 to 20:00	11.558 ach (6796.0 m^3/h, 4000 cfm)
20:00 to 24:00	1.734 ach (1019.4 m^3/h, 600 cfm)
Oct. 13–Dec. 31	1.734 ach (1019.4 m^3/h, 600 cfm)

Informative Note: Infiltration is leakage of air through any building element (e.g., walls, windows, and doors). The listed infiltration rates are independent of factors such as wind speed and indoor/outdoor temperature difference.

5.3.4.1.2.2 Outdoor Air. No outdoor air shall be introduced by the system (outdoor air fraction = 0.0) for the full annual simulation period.

5.3.4.1.2.3 Output Requirements. These shall be the same as for Case CE310 as specified in Section 5.3.4.1.1.2.

Copyrighted material licensed to Sei Ito on 2020-06-26 for licensee's use only. All rights reserved. No further reproduction or distribution is permitted. Distributed by Techstreet for ASHRAE, www.techstreet.com

5.3.4.1.3 Case CE330: High Outdoor Air. Case CE330 shall be modeled exactly the same as Case CE300 except for the following changes.

5.3.4.1.3.1 Outdoor Air. The outdoor air fraction as a percentage of total fan flow (OA%) shall be scheduled as follows:

Time Period	OA Fraction
Jan. 1–April 20	15%
April 21–Oct. 12	
00:00 to 08:00	15%
08:00 to 20:00	100%
20:00 to 24:00	15%
Oct. 13–Dec. 31	15%

Informative Note: An outdoor air fraction of 15% corresponds to 4000 cfm (6796.0 m^3/h) of mixed air containing 600 cfm (1019.4 m^3/h) of outdoor air and 3400 cfm (5776.6 m^3/h) of return air. Similarly, an outdoor air fraction of 100% corresponds to 4000 cfm (6796.0 m^3/h) of mixed air containing 4000 cfm (6796.0 m^3/h) of outdoor air and 0 cfm (0 m^3/h) of return air.

5.3.4.1.3.2 Output Requirements. These shall be the same as for Case CE310; see Section 5.3.4.1.1.2.

5.3.4.1.4 Case CE340: Infiltration and Outdoor Air Interaction. Case CE340 shall be modeled exactly the same as Case CE300 except for the following changes.

5.3.4.1.4.1 Infiltration Schedule. The infiltration rate shall be scheduled as follows:

Time Period	Infiltration Rate
Jan. 1–April 20	0 ach
April 21–Oct. 12	
00:00 to 08:00	0 ach
08:00 to 20:00	5.779 ach (3398.0 m^3/h; 2000 cfm)
20:00 to 24:00	0 ach
Oct. 13–Dec. 31	0 ach

Informative Note: Infiltration is leakage of air through any building element (e.g., walls, windows, and doors). The listed infiltration rates are independent of factors such as wind speed and indoor/outdoor temperature difference.

5.3.4.1.4.2 Outdoor Air. The outdoor air fraction as a percentage of total fan flow (OA%) shall be scheduled as follows:

Time Period	OA Fraction
Jan. 1–April 20	15%
April 21–Oct. 12	
00:00 to 08:00	15%
08:00 to 20:00	50%
20:00 to 24:00	15%
Oct. 13–Dec. 31	15%

Informative Note: An outdoor air fraction of 15% corresponds to 4000 cfm (6796.0 m^3/h) of mixed air containing 600 cfm (1019.4 m^3/h) of outdoor air and 3400 cfm (5776.6 m^3/h) of return air. Similarly, an outdoor air fraction of 50% corresponds to 4000 cfm (6796.0 m^3/h) of mixed air containing 2000 cfm (3398.0 m^3/h) of outdoor air and 2000 cfm (3398.0 m^3/h) of return air.

5.3.4.1.4.3 Output Requirements. These shall be the same as for Case CE310, as specified in Section 5.3.4.1.1.2.

5.3.4.1.5 Case CE350: Thermostat Setup. Case CE350 shall be modeled exactly the same as Case CE300 except for the following changes.

5.3.4.1.5.1 Thermostat Control Strategy. The thermostat cooling set point shall be scheduled as follows:

Time Period	Cooling Set Point
Jan. 1–April 20	25°C (77°F)
April 21–Oct. 12	
00:00 to 07:00	35°C (95°F)
07:00 to 20:00	25°C (77°F)
20:00 to 24:00	35°C (95°F)
Oct. 13–Dec. 31	25°C (77°F)

Informative Note: For April 21 through October 12, the cooling set point is lowered at 07:00, which is one hour before the internal gains increase.

5.3.4.1.5.2 Output Requirements. These shall be the same as for Case CE310, as specified in Section 5.3.4.1.1.2.

5.3.4.1.6 Case CE360: Undersized System. Case CE360 shall be modeled exactly the same as Case CE300 except for the changes in the following subsections.

5.3.4.1.6.1 Internal Heat Gains. The internal heat gains shall be scheduled according to Table 5-54. Only the sensible internal gains shall be changed from the base case for the period from April 21 through October 12; the latent internal gains and other sensible internal gains shown in the table shall be the same as for Case CE300. All other modeling details for internal gains shall be the same as for Case CE300 as specified in Sections 5.3.3.6.1 through 5.3.3.6.3.

5.3.4.1.6.2 Output Requirements. These shall be the same as for Case CE310 as specified in Section 5.3.4.1.1.2.

5.3.4.2 Economizer Series (CE400 Series). Sequential revisions to model the CE400-series cases shall be implemented by applying the base cases for a given economizer case as follows:

Case	Basis for Case
CE400	CE300
CE410	CE400
CE420	CE400
CE430	CE400
CE440	CE430

5.3.4.2.1 Case CE400: Economizer with ODB/IDB Control and Integrated Compressor Control. Case CE400 shall be modeled exactly the same as Case CE300 except for the following changes.

5.3.4.2.1.1 Economizer and Compressor Control Strategy (CE400). The outdoor air and relief dampers (shown in Figure 5-19) shall be adjusted using economizer control based on ODB and return air temperature as specified below. These cases assume no thermal losses or gains in the ducts so that the return air temperature and the zone air temperature (IDB) are equal.

Copyrighted material licensed to Sei Ito on 2020-06-26 for licensee's use only. All rights reserved. No further reproduction or distribution is permitted. Distributed by Techstreet for ASHRAE, www.techstreet.com

Table 5-54 Case CE360 Hourly Internal Gains Schedule (SI and I-P Units)

		SENSIBLE			LATENT		
Period	Time	Watts	Btu/h	frac v. max[a]	Watts	Btu/h	frac v. max[a]
Jan. 1 thru Mar. 10	0:00 - 8:00	2931	10000	0.10000	0	0	0.00
	8:00 - 20:00	2931	10000	0.10000	366	1250	0.25
	20:00 - 24:00	2931	10000	0.10000	0	0	0.00
Mar. 11 thru Apr. 10	0:00 - 9:00	2931	10000	0.10000	0	0	0.00
	9:00 - 18:00	7034	24000	0.24000	1466	5000	1.00
	18:00 - 24:00	2931	10000	0.10000	0	0	0.00
Apr. 11[b]	0:00 - 8:00	2931	10000	0.10000	0	0	0.00
	8:00 - 20:00	2931	10000	0.10000	366	1250	0.25
	20:00 - 24:00	2931	10000	0.10000	0	0	0.00
Apr. 12 thru Apr. 20	0:00 - 8:00	2931	10000	0.10000	0	0	0.00
	8:00 - 19:00	9379	32000	0.32000	1466	5000	1.00
	19:00 - 24:00	2931	10000	0.10000	0	0	0.00
Apr. 21 thru Oct. 12	0:00 - 8:00	29310	100000	1.00000	0	0	0.00
	8:00 - 12:00	29310	100000	1.00000	1466	5000	1.00
	12:00 - 14:00	29310	100000	1.00000	1466	5000	1.00
	14:00 - 16:00	29310	100000	1.00000	1466	5000	1.00
	16:00 - 20:00	29310	100000	1.00000	1466	5000	1.00
	20:00 - 24:00	29310	100000	1.00000	0	0	0.00
Oct. 13 thru Oct. 18	0:00 - 8:00	2931	10000	0.10000	0	0	0.00
	8:00 - 16:00	9379	32000	0.32000	1466	5000	1.00
	16:00 - 24:00	2931	10000	0.10000	0	0	0.00
Oct. 19 thru Nov. 05	0:00 - 8:00	2931	10000	0.10000	0	0	0.00
	8:00 - 12:00	9379	32000	0.32000	1466	5000	1.00
	12:00 - 14:00	14069	48000	0.48000	1466	5000	1.00
	14:00 - 16:00	18758	64000	0.64000	1466	5000	1.00
	16:00 - 20:00	9379	32000	0.32000	1466	5000	1.00
	20:00 - 24:00	7034	24000	0.24000	0	0	0.00
Nov. 06 thru Dec. 31[b]	0:00 - 8:00	2931	10000	0.10000	0	0	0.00
	8:00 - 20:00	2931	10000	0.10000	366	1250	0.25
	20:00 - 24:00	2931	10000	0.10000	0	0	0.00

Note: listed values are the internal gain for each hour within the specified period.

[a] "frac v. max" is the corresponding fraction for the given hourly value relative to the maximum value for the year. This is included for convenience of users who may need to provide this input.

[b] Same schedule as for Jan. 1 through Mar. 10.

CE300intgains1.xls CE360sch!

Economizer = ON AND Compressor = OFF IF IDB > 25.0°C (77.0°F) AND ODB ≤ IDB AND all cooling load for the given hour is compensated by the economizer.

Economizer = ON AND Compressor = ON IF IDB > 25.0°C (77.0°F) AND ODB ≤ IDB AND all cooling load for the given hour is NOT compensated by the economizer. In this configuration outdoor air shall be at the 100% maximum setting for the full hour.

Economizer = OFF AND Compressor = ON IF IDB > 25.0°C (77.0°F) AND ODB > IDB.

Economizer = OFF AND Compressor = OFF IF IDB ≤ 25.0°C (77.0°F),

where for

- Economizer = ON, outdoor air shall be provided as needed up to 100% outdoor air for the entire hour, but not less than the 15% minimum outdoor air setting for any time during the hour.
- Economizer = OFF, outdoor air shall be provided at the 15% minimum outdoor air setting for that hour.
- Compressor = ON, the compressor and condenser fan shall operate only as long as necessary to handle the sensible cooling load not compensated by the economizer.
- Compressor = OFF, the compressor and condenser fan shall not operate for the hour.

Informative Note: There is no lower-limit temperature, which means that the economizer control strategy is not affected by how cold the outdoor air may become.

5.3.4.2.1.2 Output Requirements. These shall be the same as for Case CE310 as specified in Section 5.3.4.1.1.2.

5.3.4.2.2 Case CE410: Economizer with ODB/IDB Control and Nonintegrated Compressor. Case CE410 shall

Copyrighted material licensed to Sei Ito on 2020-06-26 for licensee's use only. All rights reserved. No further reproduction or distribution is permitted. Distributed by Techstreet for ASHRAE, www.techstreet.com

be modeled exactly the same as Case CE400, except that while the economizer operates, the compressor shall not be allowed to operate. The economizer takes precedence over the compressor but only operates when it is capable of satisfying the entire cooling load by itself.

5.3.4.2.2.1 Economizer and Compressor Control Strategy (CE410)

Economizer = ON AND Compressor = OFF IF
IDB > 25.0°C (77.0°F) AND ODB ≤ IDB AND all cooling load for the given hour is compensated by the economizer.

Economizer = ON AND Compressor = ON NOT allowed.

Economizer = OFF AND Compressor = ON IF
IDB > 25.0°C (77.0°F) AND [(ODB > IDB) OR (all cooling load for the given hour CANNOT be compensated by the economizer)].

Economizer = OFF AND Compressor = OFF IF
IDB ≤ 25.0°C (77.0°F).

Economizer/compressor ON/OFF are as defined for Case CE400.

5.3.4.2.3 Case CE420: Economizer with ODB Limit Control. Case CE420 shall be modeled exactly the same as Case CE400, except that when ODB > 20°C (68°F), the outdoor air and relief dampers shall be maintained at 15% outdoor air.

5.3.4.2.3.1 Economizer and Compressor Control Strategy (CE420)

Economizer = ON AND Compressor = OFF IF
IDB > 25.0°C (77.0°F) AND ODB ≤ 20.0°C (68.0°F) AND all cooling load for the given hour is compensated by the economizer.

Economizer = ON AND Compressor = ON IF
IDB > 25.0°C (77.0°F) AND ODB ≤ 20.0°C (68.0°F) AND all cooling load for the given hour is NOT compensated by the economizer. In this configuration outdoor air shall be at the 100% maximum setting for the full hour.

Economizer = OFF AND Compressor = ON IF
IDB > 25.0°C (77.0°F) AND ODB > 20.0°C (68.0°F).

Economizer = OFF AND Compressor = OFF IF
IDB ≤ 25.0°C (77.0°F).

Economizer/compressor ON/OFF are as defined for Case CE400.

5.3.4.2.4 Case CE430: Enthalpy Economizer with Integrated Compressor Control. Case CE430 shall be modeled exactly the same as Case CE400 except that the outdoor air and relief dampers are adjusted using economizer control based on outdoor air enthalpy h_{amb} and return air enthalpy h_{ra} as specified below. These cases assume no thermal losses or gains in the ducts so that the return air enthalpy and the zone air enthalpy are equal.

Informative Note: Enthalpy has units of energy per mass of dry air.

5.3.4.2.4.1 Economizer and Compressor Control Strategy (CE430)

Economizer = ON AND Compressor = OFF IF
IDB > 25.0°C (77.0°F) AND $h_{amb} \le h_{ra}$ AND all cooling load for the given hour is compensated by the economizer.

Economizer = ON AND Compressor = ON IF
IDB > 25.0°C (77.0°F) AND $h_{amb} \le h_{ra}$ AND all cooling load for the given hour is NOT compensated by the economizer. In this configuration outdoor air is at the 100% maximum setting for the full hour.

Economizer = OFF AND Compressor = ON IF
IDB > 25.0°C (77.0°F) AND $h_{amb} > h_{ra}$.

Economizer = OFF AND Compressor = OFF IF
IDB ≤ 25.0°C (77.0°F).

Economizer/compressor ON/OFF are as defined for Case CE400.

5.3.4.2.5 Case CE440: Economizer with Enthalpy Limit Control. Case CE440 shall be modeled exactly the same as Case CE430, except that when h_{amb} > 47.25 kJ/kg (28.0 Btu/lb), the outdoor air and relief dampers shall be maintained at 15% outdoor air.

5.3.4.2.5.1 Economizer and Compressor Control Strategy (CE440)

Economizer = ON AND Compressor = OFF IF
IDB > 25.0°C (77.0°F) AND $h_{amb} \le 47.25$ kJ/kg (28.0 Btu/lb) AND all cooling load for the given hour is compensated by the economizer.

Economizer = ON AND Compressor = ON IF
IDB > 25.0°C (77.0°F) AND $h_{amb} \le 47.25$ kJ/kg (28.0 Btu/lb) AND all cooling load for the given hour is NOT compensated by the economizer. In this configuration outdoor air is at the 100% maximum setting for the full hour.

Economizer = OFF AND Compressor = ON IF
IDB > 25.0°C (77.0°F) AND h_{amb} > 47.25 kJ/kg (28.0 Btu/lb).

Economizer = OFF AND Compressor = OFF IF
IDB ≤ 25.0°C (77.0°F).

Economizer/compressor ON/OFF are as defined for Case CE400.

5.3.4.3 Cases with No Outdoor Air, Annual Simulation Context (CE500 Series). Sequential revisions to model the CE500-series cases shall be implemented by applying the base cases for a given case as follows:

Case	Basis for Case
CE500	CE300
CE510	CE500
CE520	CE500
CE522	CE520
CE525	CE520
CE530	CE500
CE540	CE530
CE545	CE540

Copyrighted material licensed to Sei Ito on 2020-06-26 for licensee's use only. All rights reserved. No further reproduction or distribution is permitted. Distributed by Techstreet for ASHRAE, www.techstreet.com

5.3.4.3.1 Case CE500: Base Case with No Outdoor Air. Case CE500 shall be modeled exactly the same as Case CE300 except for the changes in the following subsections.

5.3.4.3.1.1 Internal Heat Gains. The hourly internal gains shall be as indicated in Table 5-55. For this case, the "frac v. max" values in Table 5-55 are the same for both sensible and latent loads.

5.3.4.3.1.1.1 All other modeling details for internal gains shall be exactly the same as for Case CE300 as specified in Sections 5.3.3.6.1 through 5.3.3.6.3.

5.3.4.3.1.2 Indoor Fan Control and Part-Load Operation. The indoor air distribution fan cycles ON and OFF with the compressor.

Informative Note: For this type of control, CDF applies to the indoor fan energy consumption (see Section 5.3.1.10.4). Although the fan now cycles rather than operating continuously, the equivalence still applies for using gross total capacity to calculate PLR as an alternative to using net refrigeration effect and adjusted net capacity; see Informative Annex B13, Section B13.2.

5.3.4.3.1.3 Outdoor Air. No outdoor air shall be introduced to the zone by the system (outdoor air fraction = 0.0) for the full annual simulation period.

Informative Note: In one of the field-trial simulations for Case CE100, simultaneous use of zero outdoor air and zero infiltration caused an error in some simulations. This error was avoided by applying minimum outdoor air = 0.000001 ft^3/min. It is recommended to do a sensitivity test to check that using zero for both these inputs does not cause a problem.

5.3.4.3.1.4 Output Requirements. Case CE500 requires the following output:

a. Annual summations according to Section 6.3.2.1.1
b. Annual means according to Section 6.3.2.1.2
c. Annual hourly integrated maximum values according to Section 6.3.2.1.3
d. Annual hourly integrated maxima and minima according to Section 6.3.2.3
e. PLR sensitivity results according to Section 6.3.2.4
f. ODB sensitivity results according to Section 6.3.2.5
g. General reporting requirements of Section 6.1

5.3.4.3.2 Case CE510: High Part-Load Ratio. Case CE510 shall be modeled exactly the same as Case CE500 except for the following changes.

5.3.4.3.2.1 Internal Heat Gains. The hourly internal gains shall be scheduled as indicated in Table 5-56. The loads are only changed from Case CE500 for the period of April 21 through October 11. This results in changes to the listed "frac v. max" multipliers for the other time periods. For this case, the "frac v. max" values in Table 5-56 are the same for both sensible and latent loads.

5.3.4.3.2.1.1 All other modeling details for internal gains shall be exactly as Case CE300 as specified in Sections 5.3.3.6.1 through 5.3.3.6.3.

5.3.4.3.2.2 Output Requirements. Case CE510 requires the following output:

a. Annual hourly integrated maximum values according to Section 6.3.2.1.3.
b. Annual hourly integrated maxima and minima according to Section 6.3.2.3.
c. PLR sensitivity results according to Section 6.3.2.4.
d. General reporting requirements of Section 6.1.

5.3.4.3.3 Case CE520: Reduced Thermostat Set Point (EDB = 15°C). Case CE520 shall be modeled exactly the same as Case CE500 except for the following changes.

5.3.4.3.3.1 Thermostat Control Strategy

Heat = OFF

Cool = ON IF zone air temperature > 15.0°C (59.0°F);
otherwise, Cool = OFF

All other features of the thermostat shall remain as before.

5.3.4.3.3.2 Output Requirements. Case CE520 requires the following output:

a. Annual summations according to Section 6.3.2.1.1
b. Annual means according to Section 6.3.2.1.2
c. Annual hourly integrated maximum values according to Section 6.3.2.1.3
d. Annual hourly integrated maxima and minima according to Section 6.3.2.3
e. General reporting requirements of Section 6.1

5.3.4.3.4 Case CE522: Reduced Thermostat Set Point (EDB = 20°C). Case CE522 shall be modeled exactly the same as Case CE520 except that the thermostat control strategy shall be as follows:

Heat = OFF

Cool = ON IF zone air temperature > 20.0°C (68.0°F);
otherwise, Cool = OFF

All other features of the thermostat shall remain as before.

5.3.4.3.5 Case CE525: Increased Thermostat Set Point (EDB Sensitivity). Case CE525 shall be modeled exactly the same as Case CE520 except that the thermostat control strategy shall be as follows:

Heat = OFF

Cool = ON if zone air temperature > 35.0°C (95.0°F);
otherwise, Cool = OFF

All other features of the thermostat shall remain as before.

5.3.4.3.6 Case CE530: Dry Coil. Case CE530 shall be modeled exactly the same as Case CE500 except for the following changes.

5.3.4.3.6.1 Internal Gains. The latent internal gains shall be zero for the entire annual simulation period. The sensible internal gains remain as in Case CE500.

If the software being tested requires input of total internal gains, the sensible internal gains for each listed time period shall be used.

5.3.4.3.6.2 Output Requirements. Case CE530 requires the following output:

a. Annual summations according to Section 6.3.2.1.1
b. Annual means according to Section 6.3.2.1.2

Copyrighted material licensed to Sei Ito on 2020-06-26 for licensee's use only. All rights reserved. No further reproduction or distribution is permitted. Distributed by Techstreet for ASHRAE, www.techstreet.com

Table 5-55 Case CE500 Hourly Internal Gains Schedule (SI and I-P Units)

		SENSIBLE			LATENT		
Period	Time	Watts	Btu/h	frac v. max[a]	Watts	Btu/h	frac v. max[a]
Jan. 1 thru Mar. 10	0:00 - 8:00	0	0	0.00000	0	0	0.000
	8:00 - 20:00	0	0	0.00000	0	0	0.000
	20:00 - 24:00	0	0	0.00000	0	0	0.000
Mar. 11 thru Apr. 10	0:00 - 9:00	0	0	0.00000	0	0	0.000
	9:00 - 16:00	7034	24000	0.37500	2858	9750	0.375
	16:00 - 24:00	0	0	0.00000	0	0	0.000
Apr. 11[b]	0:00 - 8:00	0	0	0.00000	0	0	0.000
	8:00 - 20:00	0	0	0.00000	0	0	0.000
	20:00 - 24:00	0	0	0.00000	0	0	0.000
Apr. 12 thru Apr. 20	0:00 - 8:00	0	0	0.00000	0	0	0.000
	8:00 - 17:00	9379	32000	0.50000	3810	13000	0.500
	17:00 - 24:00	0	0	0.00000	0	0	0.000
Apr. 21 thru Oct. 11	0:00 - 8:00	7034	24000	0.37500	2858	9750	0.375
	8:00 - 12:00	9379	32000	0.50000	3810	13000	0.500
	12:00 - 14:00	14069	48000	0.75000	5715	19500	0.750
	14:00 - 16:00	18758	64000	1.00000	7621	26000	1.000
	16:00 - 20:00	9379	32000	0.50000	3810	13000	0.500
	20:00 - 24:00	7034	24000	0.37500	2858	9750	0.375
Oct. 12 thru Oct. 18	0:00 - 8:00	0	0	0.00000	0	0	0.000
	8:00 - 14:00	9379	32000	0.50000	3810	13000	0.500
	14:00 - 24:00	0	0	0.00000	0	0	0.000
Oct. 19 thru Nov. 05	0:00 - 8:00	0	0	0.00000	0	0	0.000
	8:00 - 12:00	9379	32000	0.50000	3810	13000	0.500
	12:00 - 14:00	14069	48000	0.75000	5715	19500	0.750
	14:00 - 16:00	18758	64000	1.00000	7621	26000	1.000
	16:00 - 20:00	9379	32000	0.50000	3810	13000	0.500
	20:00 - 24:00	7034	24000	0.37500	2858	9750	0.375
Nov. 06 thru Dec. 31[b]	0:00 - 8:00	0	0	0.00000	0	0	0.000
	8:00 - 20:00	0	0	0.00000	0	0	0.000
	20:00 - 24:00	0	0	0.00000	0	0	0.000

Note: listed values are the internal gain for each hour within the specified period.

[a] "frac v. max" is the corresponding fraction for the given hourly value relative to the maximum value for the year. This is included for convenience of users who may need to provide this input.

[b] Same schedule as for Jan. 1 through Mar. 10.

CE300intgains1.xls CE500sch!

c. Annual hourly integrated maximum values according to Section 6.3.2.1.3

d. Annual hourly integrated maxima and minima according to Section 6.3.2.3

e. ODB sensitivity results according to Section 6.3.2.5

f. General reporting requirements of Section 6.1

5.3.4.3.7 Case CE540: Reduced Thermostat Set Point (EDB Sensitivity). Case CE540 shall be modeled exactly the same as Case CE530 except for the following changes.

5.3.4.3.7.1 Thermostat Control Strategy

Heat = OFF

Cool = ON if zone air temperature > 15.0°C (59.0°F);
otherwise, Cool = OFF

All other features of the thermostat remain as before.

5.3.4.3.7.2 Output Requirements. Case CE540 requires the following output:

a. Annual summations according to Section 6.3.2.1.1

b. Annual means according to Section 6.3.2.1.2

c. Annual hourly integrated maximum values according to Section 6.3.2.1.3

d. Annual hourly integrated maxima and minima according to Section 6.3.2.3

e. General reporting requirements of Section 6.1

5.3.4.3.8 Case CE545: Increased Thermostat Set Point (EDB Sensitivity). Case CE545 shall be modeled exactly the same as Case CE540 except that the thermostat control strategy shall be as follows:

Heat = OFF

Copyrighted material licensed to Sei Ito on 2020-06-26 for licensee's use only. All rights reserved. No further reproduction or distribution is permitted. Distributed by Techstreet for ASHRAE, www.techstreet.com

Table 5-56 Case CE510 Hourly Internal Gains Schedule (SI and I-P Units)

		SENSIBLE			LATENT		
Period	Time	Watts	Btu/h	frac v. max[a]	Watts	Btu/h	frac v. max[a]
Jan. 1 thru Mar. 10	0:00 - 8:00	0	0	0.00000	0	0	0.00000
	8:00 - 20:00	0	0	0.00000	0	0	0.00000
	20:00 - 24:00	0	0	0.00000	0	0	0.00000
Mar. 11 thru Apr. 10	0:00 - 9:00	0	0	0.00000	0	0	0.00000
	9:00 - 16:00	7034	24000	0.33333	2858	9750	0.33333
	16:00 - 24:00	0	0	0.00000	0	0	0.00000
Apr. 11[b]	0:00 - 8:00	0	0	0.00000	0	0	0.00000
	8:00 - 20:00	0	0	0.00000	0	0	0.00000
	20:00 - 24:00	0	0	0.00000	0	0	0.00000
Apr. 12 thru Apr. 20	0:00 - 8:00	0	0	0.00000	0	0	0.00000
	8:00 - 17:00	9379	32000	0.44444	3810	13000	0.44444
	17:00 - 24:00	0	0	0.00000	0	0	0.00000
Apr. 21 thru Oct. 11	0:00 - 8:00	21103	72000	1.00000	8573	29250	1.00000
	8:00 - 12:00	21103	72000	1.00000	8573	29250	1.00000
	12:00 - 14:00	21103	72000	1.00000	8573	29250	1.00000
	14:00 - 16:00	21103	72000	1.00000	8573	29250	1.00000
	16:00 - 20:00	21103	72000	1.00000	8573	29250	1.00000
	20:00 - 24:00	21103	72000	1.00000	8573	29250	1.00000
Oct. 12 thru Oct. 18	0:00 - 8:00	0	0	0.00000	0	0	0.00000
	8:00 - 14:00	9379	32000	0.44444	3810	13000	0.44444
	14:00 - 24:00	0	0	0.00000	0	0	0.00000
Oct. 19 thru Nov. 05	0:00 - 8:00	0	0	0.00000	0	0	0.00000
	8:00 - 12:00	9379	32000	0.44444	3810	13000	0.44444
	12:00 - 14:00	14069	48000	0.66667	5715	19500	0.66667
	14:00 - 16:00	18758	64000	0.88889	7621	26000	0.88889
	16:00 - 20:00	9379	32000	0.44444	3810	13000	0.44444
	20:00 - 24:00	7034	24000	0.33333	2858	9750	0.33333
Nov. 06 thru Dec. 31[b]	0:00 - 8:00	0	0	0.00000	0	0	0.00000
	8:00 - 20:00	0	0	0.00000	0	0	0.00000
	20:00 - 24:00	0	0	0.00000	0	0	0.00000

Note: listed values are the internal gain for each hour within the specified period.

[a] "frac v. max" is the corresponding fraction for the given hourly value relative to the maximum value for the year. This is included for convenience of users who may need to provide this input.

[b] Same schedule as for Jan. 1 through Mar. 10.

CE300intgains1.xls CE510sch!

Cool = ON if zone air temperature > 35.0°C (95.0°F);
otherwise, Cool = OFF

All other features of the thermostat shall remain as before.

5.4 Input Specification for Space-Heating Equipment Performance Tests. Cases HE100 through HE230 shall be modeled as specified in this section and its subsections.

Informative Note: The test cases isolate the furnace performance by simplifying the zone-side energy transfers. The simulation method isolates a single facet of the furnace model in each test case, starting with the simplest case and progressively adding complexity.

5.4.1 Case HE100: Base-Case Building and Mechanical Systems. Case HE100 shall be the first case modeled as detailed in this section and its subsections.

Informative Note: The bulk of the work for implementing these cases is assembling an accurate base building and mechanical system. It is recommended that building inputs be double-checked and result disagreements be diagnosed before proceeding to the other cases. When diagnosing the results, it is important to compare results differences for building loads along with mechanical system results, because disagreements for building loads influence the mechanical systems results.

5.4.1.1 Weather Data. The weather data used for this simulation shall be the data file HE100W.WY2. The file is provided with the electronic files accompanying this standard as described in Normative Annex A1, Section A1.2.3.

Informative Note: Other cases call for different weather files as needed.

5.4.1.2 Output Requirements. All of the output specified in Sections 6.1 and 6.4 shall be reported for Case HE100 and the other cases of Section 5.4.

5.4.1.3 Building Geometry. The base-case building shall be a 48 m^2 floor area, single-story, low-mass building with rectangular-prism geometry and internal measurements as shown in Figure 5-20. The zone air volume shall be 129.6 m^3.

5.4.1.4 Building Envelope Thermal Properties

5.4.1.4.1 The base-case building shall be a near-adiabatic test cell except for one heat transfer surface. Energy

Copyrighted material licensed to Sei Ito on 2020-06-26 for licensee's use only. All rights reserved. No further reproduction or distribution is permitted. Distributed by Techstreet for ASHRAE, www.techstreet.com

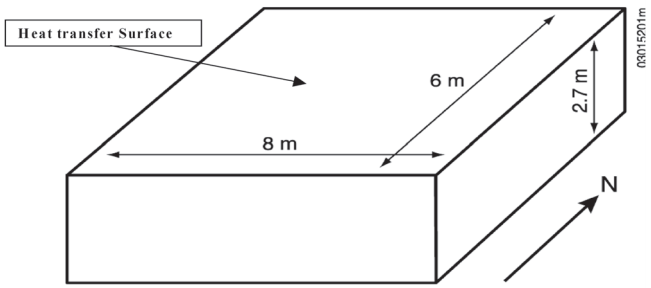

Figure 5-20 Base-case building with heat transfer surface.

Table 5-57 Material Specifications for Base Case

Element	Area, m^2	k, W/(m·K)	t, m	U [a], $W/(m^2 \cdot K)$	R [b], $m^2 \cdot K/W$
Wall	75.6	0.01	1.00	0.01	100
Floor	48.0	0.01	1.00	0.01	100
Roof (*heat transfer surface*)	48.0	0.0714	0.01	7.14	0.14

a. This is the U-factor defined between internal and external surfaces of an envelope component and as such does not include the resistance offered by surface convection and longwave radiation.

b. This is the R-value defined between internal and external surfaces of an envelope component and as such does not include the resistance offered by surface convection and longwave radiation.

shall be transferred to the outdoors through the heat transfer surface, with the furnace used to maintain the interior set point temperature.

The material properties for the exterior wall, floor, and roof listed in Table 5-57 shall be used. The roof shall be modeled as the heat transfer surface. If the software being tested does not allow the specified insulation levels, the thickest insulation the software will permit shall be used, and the floor and wall areas shall be reduced to achieve the same UA values as defined in Table 5-57. The zone air volume shall remain as 129.6 m^3.

Informative Note: The insulation in the walls and floors has been made very thick and resistant to heat transfer to effectively thermally decouple the zone from ambient conditions; i.e., they are made to be near adiabatic.

5.4.1.4.2 Materials shall have no thermal or moisture capacitance and shall have no moisture diffusion through them. If the software being tested requires inputs for thermal capacitance, moisture capacitance, and/or moisture diffusion, the minimum values the software being tested allows shall be used.

5.4.1.4.3 If the program being tested automatically calculates air density, skip the instructions in this section and proceed to Section 5.4.1.4.4. Air density at 115 m altitude is 1.185 kg/ m^3. Use of different (nonspecified) values shall not be prohibited if there is a mathematical, physical, or logical basis for applying them. Where different values are used, they shall be applied consistently throughout the test cases. Use of nonspecified values shall be documented in the Standard Output Report specified in Normative Annex A2.

5.4.1.4.4 For software programs that require input of ground thermal properties, the ground in the vicinity of the building shall be dry-packed soil with the following characteristics:

- Soil thermal conductivity k = 1.3 W/(m·K)
- Soil density = 1500 kg/m^3
- Soil specific heat = 800 J/(kg·K)
- Deep ground temperature = 10°C

Informative Note: Although the zone is modeled as if suspended above the ground, some programs require input for ground thermal properties.

5.4.1.5 Infiltration. There shall be no internal infiltration in the base-case model:

Infiltration rate = 0.0 ach (air changes per hour) for the entire simulation period

5.4.1.6 Internal Heat Gains. There shall be no internal heat gains (sensible or latent) in the base-case model:

Sensible internal gains = 0 W, continuously

Latent internal gains = 0 W, continuously

5.4.1.7 Surface Convective Heat Transfer Coefficients. If the software being tested does not allow for the direct input of constant convection coefficients, do not apply the instructions of Sections 5.4.1.4.1, 5.4.1.5, 5.4.1.7, and 5.4.1.8, and follow the approach specified in Section 5.4.1.9.

Surface convection coefficients shall approach zero for all interior and exterior surfaces except for the roof, which will have a constant surface convection coefficient.

The following surface convection coefficients h_c shall be defined for all internal and external surfaces:

- Internal and external h_c = 20 W/(m^2·K) for the roof.
- Internal and external $h_c \rightarrow 0$ for other surfaces.

If the software being tested does not allow a definition of zero for h_c, set these coefficients to as small a value as the software allows.

5.4.1.7.1 The floor shall have the same interior and exterior film coefficients as the walls.

Informative Note: This assumes that the entire zone is suspended above the ground.

5.4.1.7.2 If the software being tested models radiation and convection together, the inside and outside combined heat transfer coefficients for the roof heat transfer surface shall be 20 W/(m^2·K). For all other surfaces, this value shall be zero. If the software being tested requires a nonzero value for the combined heat transfer coefficient, set it to as small a value as allowed by the software.

Informative Note: The analytical solution results shown in Informative Annex B16, Section B16.6 (and detailed in Informative Annex B17, Section B17.2), assume that all exterior surfaces except the roof are adiabatic.

Copyrighted material licensed to Sei Ito on 2020-06-26 for licensee's use only. All rights reserved. No further reproduction or distribution is permitted. Distributed by Techstreet for ASHRAE, www.techstreet.com

5.4.1.8 Surface Radiative Heat Transfer Coefficients. The following longwave emissivity λ and solar absorptivity α shall be used for all internal and external surfaces:

- Longwave emissivity, $\lambda \rightarrow 0$ (shall approach zero) at all internal and external surfaces.
- Solar absorptivity, $\alpha \rightarrow 0$ (shall approach zero) at all internal and external surfaces.

If the software being tested does not allow a definition of zero for λ or for α, set them to as small a value as the software allows. For software that allows direct input of convective heat transfer coefficients and allows the direct input of radiative heat transfer coefficients h_r, set h_r to as small a value as the software allows.

5.4.1.9 Alternate Method for Developing Heating Loads Applying Heat Exchange by Infiltration. For programs that do not allow the user to define convective surface coefficients, the heating loads shall be driven by infiltration of outdoor air through the zone as defined in this section and its subsections. The model shall comply with all requirements of Section 5.4.1 except for Sections 5.4.1.4.1, 5.4.1.5, 5.4.1.7, and 5.4.1.8.

Informative Note: The configuration of the base-case building is a single near-adiabatic rectangular zone where heating load is generated in the zone by means of regulated infiltration.

Informative Note: The set point temperature of the zone and outdoor air temperatures and the amount of outdoor air infiltration drives the furnace operation. This case is designed to ensure the furnace output is correctly represented in the zone energy balance.

5.4.1.9.1 Building Zone Description. See Figure 5-21 for requirements.

5.4.1.9.2 Building Envelope Thermal Properties. Material properties for the exterior wall, floor, and roof shall be as specified in Table 5-58.

If the software being tested does not allow the specified insulation levels, then the thickest insulation the software will permit shall be used, and the floor and wall areas shall be reduced to achieve the same UA values as defined in Table 5-58. The zone air volume shall remain as 129.6 m^3.

5.4.1.9.3 Infiltration

Infiltration mass flow rate
≈ 0.2 kg/s for entire simulation period

Informative Note: The infiltration air mass or volumetric flow rate, as applied by the software being tested, should be input for test Cases HE100 through HE230 such that the total effective UA value, including residual heat flow through exterior surfaces, is 199.953 W/K as determined by the material specifications in Table 5-57 and the surface coefficient specifications in Section 5.4.1.7.

The mass flow rate to achieve the given total effective UA value will vary depending on the heat flow through the exterior elements and also vary slightly from case to case as the outdoor air specific heat varies with outdoor conditions. See Informative Annex B17, Section B17.2.3, for supporting discussion.

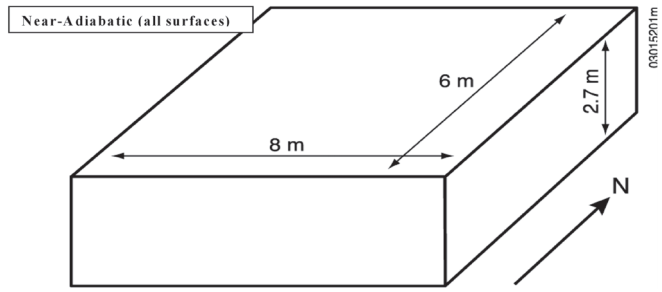

Figure 5-21 Base-case building with all surfaces near-adiabatic.

Table 5-58 Material Specifications for Alternative Method Base Case

Element	Area, m^2	k, W/(m·K)	t, m	U [a], $W/(m^2 \cdot K)$	R [b], $m^2 \cdot K/W$
Wall	75.6	0.01	1.00	0.01	100
Floor	48.0	0.01	1.00	0.01	100
Roof	48.0	0.01	1.00	0.01	100

a. This is the U-factor defined between internal and external surfaces of an envelope component and as such does not include the resistance offered by surface convection and longwave radiation.
b. This is the R-value defined between internal and external surfaces of an envelope component and as such does not include the resistance offered by surface convection and longwave radiation.

5.4.1.10 Mechanical System. The mechanical system shall be a simple sealed combustion, fuel-fired furnace heating system as defined in the following subsections.

5.4.1.10.1 General Information. The mechanical system shall be modeled as follows:

- The furnace shall inject heat directly to the zone air (i.e., a 100% convective heating system).
- The zone air shall be fully mixed.
- The furnace shall draw its combustion air from outdoors.
- The furnace flue shall not extract air from the zone.
- There shall be no pilot light.
- There shall be no air or thermal losses from the distribution ducts.
- The heat from the circulation fan energy shall go entirely to the distribution (supply) air.
- The draft fan heat shall be exhausted in the flue; none of the draft fan heat shall be introduced into the zone.

5.4.1.10.2 Thermostat Control Strategy. Control settings shall be as follows:

- Heat = ON IF temperature < 20°C; otherwise, Heat = OFF
- Cool = OFF

5.4.1.10.2.1 There shall be no zone humidity control.

5.4.1.10.2.2 The thermostat shall sense only the zone air temperature; the thermostat itself shall not sense any radiative heat transfer exchange with the interior surfaces.

5.4.1.10.2.3 The controls for this system are ideal in that the equipment shall maintain the set point exactly when it operates and is not overloaded. There are no minimum ON or

Copyrighted material licensed to Sei Ito on 2020-06-26 for licensee's use only. All rights reserved. No further reproduction or distribution is permitted. Distributed by Techstreet for ASHRAE, www.techstreet.com

OFF time duration requirements for the unit. Also, there is no hysteresis control band; i.e., there is no ON at set point –x°C or OFF at set point +y°C. If the software being tested requires input for these settings, the minimum values allowed by the software shall be used.

5.4.1.10.2.4 The thermostat shall be nonproportional.

Informative Note: A nonproportional thermostat operates such that when the zone air temperature drops below the thermostat heating set point, the heat generation rate is assumed to equal the maximum capacity of the heating equipment corresponding to environmental conditions at the time of operation. A proportional thermostat throttles the heat addition rate (or heat extraction rate) in proportion to the difference between the zone set point temperature and the actual zone temperature. A proportional thermostat model can be made to approximate a nonproportional thermostat model by setting a very small throttling range (the minimum allowed by the software being tested). A PLF = f(PLR$_f$) curve is described in Section 5.4.1.10.4 to account for equipment cycling.

5.4.1.10.3 Full-load Heating System Performance Data. The equipment full-load capacity and full-load performance data for the natural gas furnace shall be as follows:

Furnace capacity = 10 kW
(this capacity does not include fan heat)

Furnace full-load efficiency = 100%

5.4.1.10.4 Part-Load Operation. The furnace shall cycle ON and OFF to meet the load at off-design conditions. The part-load ratio (PLR) is used to predict the energy use of a furnace under part-load conditions and is defined as

$$\mathrm{PLR}_f = \frac{\text{Load placed on furnace}}{\text{Furnace capacity}}$$

where "Load placed on furnace" is integrated over the simulation time step and "Furnace capacity" is the capacity of the furnace to supply heat for that time step.

The part-load factor (PLF) represents the degradation in furnace efficiency due to part-load operation:

$$\mathrm{PLF} = \frac{\text{Part-load efficiency}}{\text{Steady-state efficiency}} = \frac{\eta_{part\ load}}{\eta}$$

For building energy simulation programs, defining the part-load performance in terms of a part-load curve as a plot of PLF vs. PLR$_f$ shall be permitted. The part-load curve chosen for this suite of test cases shall be as illustrated in Figure 5-22. The equation for this curve is

$$\mathrm{PLF} = \frac{\mathrm{PLR}_f}{\mathrm{HIR}(\mathrm{PLR}_f)}$$

where

$$\mathrm{HIR}(\mathrm{PLR}_f) = a + b \times \mathrm{PLR}_f + c \times \mathrm{PLR}_f^2 + d \times \mathrm{PLR}_f^3$$

The heat input ratio (HIR) coefficients for a condensing gas furnace are defined as follows:

a = 0.0080472574

b = 0.87564457

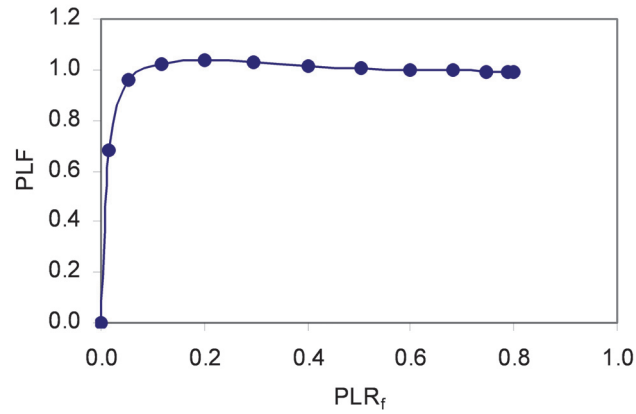

Figure 5-22 Part-load factor curve.

c = 0.29249943

d = – 0.17624156

Informative Note: HIR(PLR$_f$) is the correlation factor applied to the HIR at full load to correct for the effect of part-load performance[B-18]. These PLFs were evaluated for one-hour time steps, and their use with different time steps may introduce some differences.

Informative Note: For the base case (Case HE100) and Case HE110, the furnace runs continuously at full-load capacity and, therefore, part-load operation is not examined. However, if the software being tested requires input for the part-load operation, use the above equation. For the remaining furnace test cases (HE120 through HE230), the furnace operates at part load all or most of the time.

5.4.1.10.5 Fuel Higher-Heating Value (HHV). For these tests, the HHV of natural gas shall be 38 MJ/m^3. The HHV shall be used to calculate the rate of fuel consumption.

Informative Note: The amount of heat generated by the combustion of a unit of fuel, including the latent heat of vaporization, is known as the "higher heating value" (HHV). The fuel flow rate and HHV are reported at standard temperature and pressure (STP = 0°C and 1 atm) conditions and, therefore, the altitude and density of air at the building site will not affect the results.

5.4.1.10.6 Fans. There shall be no fan power and no heat generated by the fans for the base case. The circulating fan and draft fan are simulated but their power draw shall be zero.

Circulating fan power draw = 0 W, runs continuously

Draft fan power draw = 0 W, cycles with burner operation

5.4.2 Space-Heating Equipment Performance Analytical Verification Tests

5.4.2.1 Case HE110: Efficiency Test. Case HE110 shall be modeled exactly the same as Case HE100 except as follows:

Furnace full-load efficiency = 80%

Informative Note: The objective of this test case is to test a program's ability to model heating equipment performance under controlled load and weather conditions.

Copyrighted material licensed to Sei Ito on 2020-06-26 for licensee's use only.
All rights reserved. No further reproduction or distribution is permitted. Distributed by Techstreet for ASHRAE, www.techstreet.com

5.4.2.2 Case HE120: Steady Part-Load Test. Case HE120 shall be modeled exactly the same as Case HE110 except that the weather file shall be HE120W.WY2. These data are provided with the electronic files accompanying this standard and are described in Normative Annex A1, Section A1.2.3.

Part-load performance shall be as specified previously in Section 5.4.1.10.4.

Informative Note: The objective of this test case is to test a program's ability to model heating equipment part-load performance under controlled load and weather conditions in situations where the furnace will not run at full-load capacity, because the indoor-outdoor temperature difference has been reduced. This case is designed to ensure that the furnace part-load curves are properly implemented.

5.4.2.3 Case HE130: No-Load Test. Case HE130 shall be modeled exactly the same as Case HE110 except that the weather file shall be HE130W.WY2.

These data are provided with the electronic files accompanying this standard and are described in Normative Annex A1, Section A1.2.3.

Informative Note: The objective of this test case is to test a program's ability to accurately respond to zero heat loads on the heating equipment. Because the outdoor temperature is kept at a constant value of 20°C and the set point temperature is 20°C, the heating system should never turn on.

5.4.2.4 Case HE140: Periodically Varying Part-Load Test. Case HE140 shall be modeled exactly the same as Case HE110 except that the weather file shall be HE140W.WY2.

These data are provided with the electronic files accompanying this standard and are described in Normative Annex A1, Section A1.2.3.

These weather data are represented by Figure 5-23, which is a plot of the outdoor temperature varying over the range of +20°C to –20°C over a 24-hour period. The equation of the sinusoid is

$$T = 20 \times \left[\sin\left(\frac{\pi}{12} \times t\right)\right]$$

where T is the resulting outdoor dry-bulb temperature and t is the corresponding time (hour) of day.

Informative Note: The objective of this test case is to examine a program's ability to accurately respond to variations in load. In Case HE140, a weather file with a sinusoidally varying outdoor temperature is used. This case is designed to ensure that the model operates over the full range of the part-load curve. This represents a more challenging test as to whether the part-load ratio is properly implemented.

5.4.2.5 Case HE150: Circulating Fan Test. Case HE150 shall be modeled exactly the same as Case HE140 except that a circulating fan shall operate as follows:

- Circulating fan power draw = 200 W.
- Circulating fan runs continuously.
- Circulating fan flow rate = 0.355 m^3/s.

The circulating fan motor shall be mounted in the airstream such that 100% of the heat from fan energy goes to the distribution (supply) air.

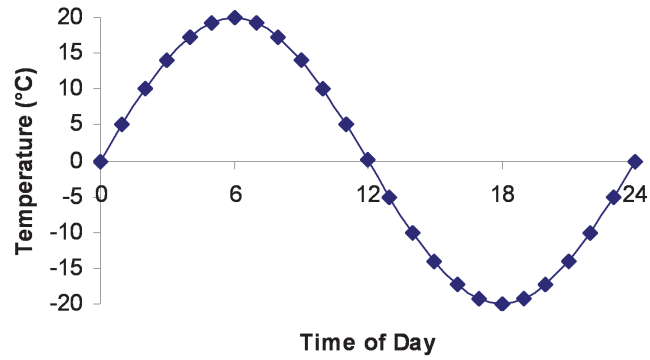

Figure 5-23 Temperature varying sinusoidally from +20°C to –20°C over a 24-hour period.

Informative Note: The objective of this case is to test a program's ability to model circulating fan operation. This case is designed to ensure that the fan electrical consumption is properly calculated and that the heat output of the circulating fan is correctly reflected in the zone energy balance.

5.4.2.6 Case HE160: Cycling Circulating Fan Test. Case HE160 shall be modeled exactly the same as Case HE150 except that the circulating fan shall cycle with burner operation (i.e., burner ON→fan ON; burner OFF→fan OFF).

Informative Note: The objective of this test case is to test a program's ability to model cyclic circulation fan operation. This case is designed to ensure that the impact of fan cycling is properly considered in the calculation of circulation-fan electrical consumption.

5.4.2.7 Case HE170: Draft Fan Test. Case HE170 shall be modeled exactly the same as Case HE150 except that the draft fan electrical consumption shall be incorporated as follows:

- Draft fan power draw = 50 W.
- Draft fan, cycles with burner operation (i.e., burner ON → fan ON; burner OFF→fan OFF).
- Draft fan heat shall be exhausted in the flue; none of the draft fan heat shall be introduced into the zone.
- The circulating fan operates exactly as in Case HE150 (continuously) as specified in Section 5.4.2.5.

Informative Note: The objective of this test case is to test a program's ability to model draft fan operation. It is designed to ensure that the impact of the draft fan is properly considered in calculation of electrical consumption but not accounted for in the fuel consumption. The heat output of the draft fan should not be added to the zone energy balance.

5.4.3 Space-Heating Equipment Performance Comparative Tests. These tests shall be modeled as specified in the following subsections.

Informative Note: The objective of these cases is to test the interactions between furnace, control, and zone models. The approach taken is to use the same zone configuration as in Cases HE100 through HE170 except that realistic boundary conditions are incorporated.

5.4.3.1 Case HE210: Realistic Weather Data. Case HE210 shall be modeled exactly the same as Case HE170

Copyrighted material licensed to Sei Ito on 2020-06-26 for licensee's use only. All rights reserved. No further reproduction or distribution is permitted. Distributed by Techstreet for ASHRAE, www.techstreet.com

except that the weather data and circulating fan control strategy shall be changed as specified in the following subsections.

Informative Note: The objective of this test case is to test a program's ability to model heating equipment part-load performance under controlled load and typical dynamic weather conditions. This case is designed to test the combined effects of circulating fan, draft fan, and realistic load profile. The output of interest is a comparison of the circulation and draft fan electrical energy consumption and fuel consumption.

5.4.3.1.1 Weather Data. For this test case, weather data provided in file HE210W.WY2 shall be used. These data are provided with the electronic files accompanying this standard and are described in Normative Annex A1, Section A1.2.3.

5.4.3.1.2 Fans. The fans shall be as follows:

- Circulating fan power draw = 200 W.
- Circulating fan, cycles with burner operation (i.e., burner ON → fan ON, burner OFF → fan OFF).
- Draft fan operation shall be the same as in case HE170 as specified in Section 5.4.2.7.

5.4.3.2 Case HE220: Setback Thermostat. Case HE220 shall be modeled exactly the same as Case HE210 except that the zone set point temperature shall be scheduled as defined below and as illustrated in Figure 5-24.

For 6h00 ≤ time of day ≤ 23h00, then

- Heat = ON IF temperature < 20°C; otherwise, Heat = OFF
- Cool = OFF

For 23h00 < time of day < 6h00, then

- Heat = ON IF temperature < 15°C; otherwise, Heat = OFF
- Cool = OFF

Informative Note: The objective of this test case is to test the effects of setback temperatures on furnace fuel consumption. Since the zone and building fabric have very low thermal mass, the zone air temperature should follow the set point schedule.

5.4.3.3 Case HE230: Undersized Furnace. Case HE230 shall be modeled exactly the same as Case HE220 except that furnace capacity = 5 kW (this capacity does not include fan heat).

Furnace full-load efficiency and efficiency variation with part load shall remain as in Case HE220.

Informative Note: The objective of this test case is to test the behavior of the furnace algorithm when the system is undersized. For this purpose, the zone temperature will fluctuate throughout the simulation.

5.5 Input Specification for Air-Side HVAC Equipment Analytical Verification Tests

5.5.1 Four-Pipe Fan-Coil (FC) System Cases (AE100 Series). The ability to model a four-pipe fan-coil (FC) system shall be tested as described in this section.

Informative Note: If the software being tested is capable of applying a variety of system models to address an FC system, the system model that is most similar to the FC system specified for Case AE101 below should be applied, and the same selected system should be applied for all of the FC system test cases. The user may test other possible modeling approaches (available system models) in this context as appropriate to the software being tested.

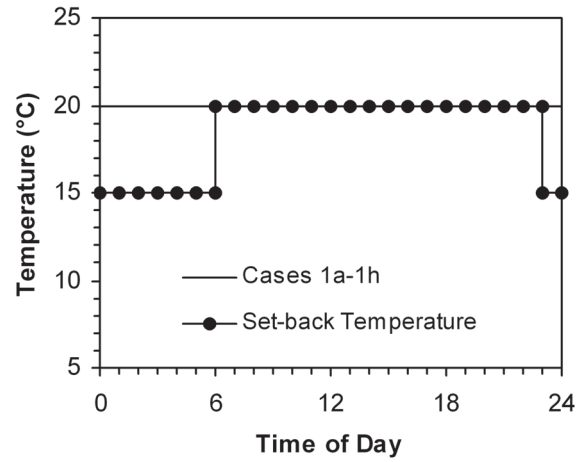

Figure 5-24 Setback temperatures over a 24-hour period.

5.5.1.1 Case AE101: Base Case, High-Heating 1. Case AE101 shall be modeled as described in this section and its subsections. The system configuration shall be modeled as presented in the schematic diagram in Figure 5-25. System input parameters shall be as described in the following sections.

Informative Note, Objective of the Test Case: Test model treatment of a four-pipe fan-coil air system with high sensible heating load and cold outdoor air.

Informative Note, Method of the Test Case: An FC air system with a constant-volume supply fan and heating and cooling coils conditions a single zone that has constant sensible and latent internal loads. The model is run at specified constant outdoor and indoor conditions. Resulting coil loads are compared with the quasi-analytical solution (QAS) and with other example results (see Informative Annex B16, Section B16.7). The QAS is provided with the accompanying electronic media and is further discussed in Informative Annex B17, Section B17.3.

5.5.1.1.1 Fan Operation. The system shall have a supply fan and an exhaust fan. There is no return fan.

5.5.1.1.1.1 Supply Fan. The supply fan characteristics shall be as follows:

a. The fan is located downstream of the heating and cooling coils as specified in Figure 5-25.
b. The supply fan total pressure rise = 2.0 in. of water (498 Pa).
c. The fan provides a constant volume of supply air measured at the fan inlet as specified in Section 5.5.1.1.2.
d. The fan operates continuously.
e. Fan energy is transferred to the air that is being moved.
f. Fan motor and transmission drive energy loss is not transferred to the moving air.

Copyrighted material licensed to Sei Ito on 2020-06-26 for licensee's use only. All rights reserved. No further reproduction or distribution is permitted. Distributed by Techstreet for ASHRAE, www.techstreet.com

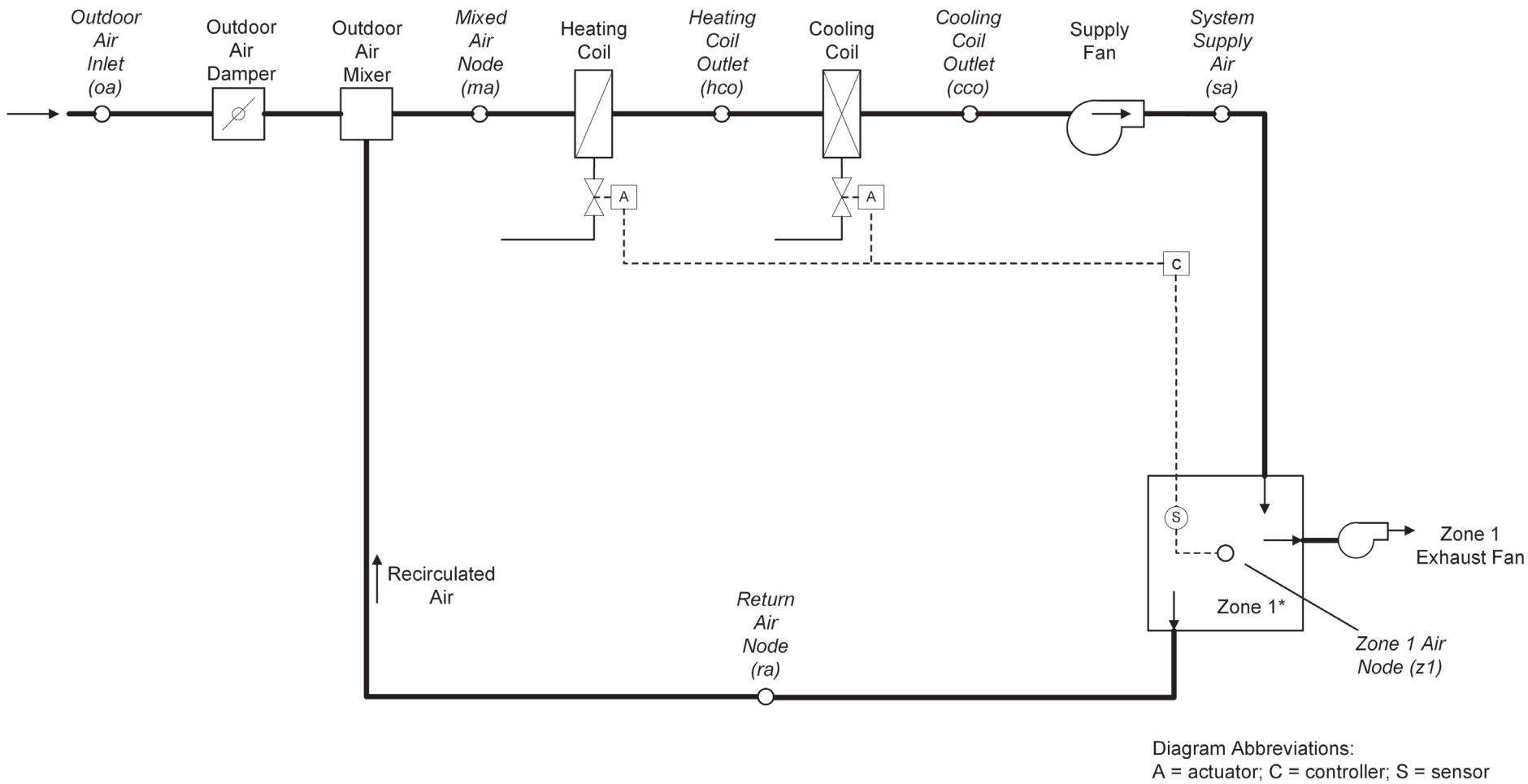

* Sensible and latent zone loads are specified for the base case in Section 5.5.1.1.4 and vary among the test cases. The zone thermostat senses only the zone air indoor dry-bulb temperature at the zone air node.

Figure 5-25 Four-pipe fan-coil (FC) system schematic.

Informative Note: *Valves indicated are for a typical hydronic system and are not explicitly required by the test specification. Coils can be of any type as long as they meet the operational requirements of the test specification.*

Copyrighted material licensed to Sei Ito on 2020-06-26 for licensee's use only.
All rights reserved. No further reproduction or distribution is permitted. Distributed by Techstreet for ASHRAE, www.techstreet.com

Table 5-59 Case AE101 System and Zone Airflows

Input Parameter	SI Units	I-P Units
System supply airflow rate	283.17 L/s [a]	600 cfm [a]
Zone exhaust airflow rate	94.39 L/s [b]	200 cfm [b]

a. Volumetric airflow rate at the supply fan inlet conditions; see Section 5.5.1.1.2.1.
b. Volumetric airflow rate at the exhaust fan inlet conditions; see Section 5.5.1.1.2.2.

g. (Fan heat to airstream) = H_o × [1/(Fan mechanical efficiency) – 1], where
   - H_o is the fan output power required to meet the specified airflow requirements; see H_o under *fan mechanical efficiency* in Section 3.1.
   - Fan mechanical efficiency = 0.7, constant value; *fan mechanical efficiency* is defined in Section 3.1.

h. (Fan motor input power) = H_o/[(Fan mechanical efficiency) × (Transmission drive efficiency) × (Motor efficiency)], where
   - 0 ≤ (Transmission drive efficiency) ≤ 1; *transmission drive efficiency* is defined in Section 3.1.
   - 0 ≤ (Motor efficiency) ≤ 1; *motor efficiency* is defined in Section 3.1.

If the program being tested is not able to model the transmission drive and motor losses as occurring outside the airstream, the fan, transmission drive, and motor efficiency losses shall be specified to have a combined efficiency of 0.7 and to occur in the airstream.

Informative Note: The airstream heat gain (fan heat) affects the test-case outputs, while the motor and transmission drive input energy do not; therefore, the transmission and motor efficiency may be any value as long as their heat is not imparted to the airstream and the fan mechanical efficiency = 0.7.

Informative Note: The pressure rise and the efficiency of the fans in the fan-coil units are not realistic. The same values that are used for the larger systems (specified in later sections) are used here to simplify the task of those who use this specification.

5.5.1.1.1.2 Exhaust Fan. The zone exhaust fan shall maintain airflow as specified in Section 5.5.1.1.2.

Informative Note: Exhaust fan details are not defined explicitly, as the exhaust fan's characteristics have no impact on the results of the test case.

5.5.1.1.1.3 Programs with Predetermined Fan Modeling Assumptions. Programs with predetermined assumptions shall be permitted to apply those assumptions.

Informative Note: For example, a program may model the listed system supply airflow rate (see Section 5.5.1.1.2) using its default entering-air conditions if they are not normally adjustable by a typical program user.

5.5.1.1.2 Airflows. System and zone airflows shall be as shown in Table 5-59 and the following subsections.

5.5.1.1.2.1 System Supply Air. The system supply airflow rate shall be volumetrically constant and is measured at the supply fan inlet.

Informative Note: As the temperature and humidity ratio of the air entering the supply fan change, the specific volume of that air changes. This means that the mass flow rate of supply air, while constant for a given steady-state test case, varies among the test cases based on fan inlet conditions. The mass flow rate of the zone supply air is equal to that of the system supply air.

Informative Note: The QAS calculates the system mass flow rate from the volumetric flow using the local specific volume of air entering the supply fan. Results differences versus the QAS can be caused by differences in the method and assumptions a tested program uses to convert volumetric flow to mass flow. Example results for the QAS, including detailed outputs (e.g., mass flow rate, specific volume, enthalpy) at specific system locations, are provided in Informative Annex B16, Section B16.7. Assumptions of the QAS for converting volumetric flows to mass flows are provided in Part II of the originating test suite adaptation report [B-6].

5.5.1.1.2.2 Zone Exhaust Air. The zone exhaust airflow rate shall be volumetrically constant and is measured at the exhaust fan inlet conditions.

Informative Note: The QASs calculate the exhaust air mass flow rate from the volumetric flow using the local specific volume of the air entering the exhaust fan (i.e., the zone air properties); see Part II of the originating test suite adaptation report [B-6].

Informative Note: As the temperature and humidity ratio of the air entering the exhaust fan change, the specific volume of that air changes. This means that the mass flow rate of exhaust air, while constant for a given steady-state test case, varies among the test cases based on zone conditions.

5.5.1.1.2.3 Outdoor Air. The flow of outdoor air shall be introduced at a mass flow rate equal to the zone exhaust air mass flow rate. For programs that do not precisely apply the specified mass flow balance, introduction of outdoor air to replace the specified exhaust airflow (see Table 5-59), applying the tested program's specific assumptions regarding this calculation, shall be permitted.

5.5.1.1.2.4 Frictionless Ducts, Coils, and Dampers. Airflow through ducts, coils, and dampers shall be frictionless such that there shall be no pressure drops through these components. If the software being tested does not allow frictionless components, the model shall apply the least amount of friction in these components that the software being tested allows.

Informative Note: Modeling of fan heat is as described previously in Section 5.5.1.1.1.

5.5.1.1.2.5 HVAC System Component Air Leakage and Heat Loss. HVAC system components, including ducts, mixing boxes, dampers, fans, and coils, shall have no air leakage and shall have no heat exchange (gains or losses) with their external surroundings. If the software being tested does not allow zero system air leakage or zero external heat gains or losses for HVAC system components, the model shall apply the least amount of air leakage and external heat exchange that the software being tested allows.

Informative Note: Modeling of exhaust and outdoor airflows is as described previously in Sections 5.5.1.1.2.2 and 5.5.1.1.2.3. Modeling of heating and cooling coils is as described in Section 5.5.1.1.3.

Copyrighted material licensed to Sei Ito on 2020-06-26 for licensee's use only. All rights reserved. No further reproduction or distribution is permitted. Distributed by Techstreet for ASHRAE, www.techstreet.com

5.5.1.1.3 Operation of Heating and Cooling Coils. The heating coil and the cooling coil shall be modeled with the following characteristics:

a. All coils maintain set point precisely without a throttling range. If the program being tested requires an input for throttling range, the minimum value allowed by the program shall be applied and the coil set point adjusted so that supply air is delivered at the specified temperature. Adjustment of the throttling range and coil set points for the purpose of matching the specified coil set point temperature shall be permitted for each test case.

b. All coils have capacity greater than or equal to that needed to meet the coil loads.

c. Heating and cooling coils modulate to meet the zone sensible load, delivering air at the temperature needed to maintain the zone thermostat set point.

d. Cooling-coil bypass factor (BF) = 0. For building energy analysis programs not capable of directly modeling a cooling coil with a bypass factor of zero, a model shall be developed that applies the lowest bypass factor that the software being tested allows. Programs that do not have a bypass factor input shall apply a coil model that maximizes the cooling-coil leaving-air relative humidity when cooling-coil latent load is present. For such programs, to emulate BF = 0 for each steady-state test case, variation of coil parameters among the test cases shall be allowed.

Informative Note: BF = 0 means that when the cooling-coil leaving-air temperature is less than the dew-point temperature of the air entering the cooling coil, the air will leave the coil at 100% relative humidity. If the cooling-coil leaving-air temperature is greater than the entering-air dew-point temperature, no condensation occurs. When cooling-coil latent load is present, the cooling-coil leaving air should be 100% saturated. This is equivalent to having an apparatus dew point equal to the required coil leaving-air temperature. To achieve saturation, programs with physical coil models should try to maximize the size of the coil and modulate the coil temperature or flow so the apparatus dew point is as close as possible to the required leaving-air temperature while still delivering the proper amount of cooling. The QAS assumes that any condensate that forms is cooled from the entering-air dew-point temperature to the coil leaving-air temperature (see Part II, Section 2.2.1.26.1 of the originating test suite adaptation report[B-6]). Other assumptions regarding leaving condensate temperature may be reasonable.

Informative Note: For programs that do not accept a bypass factor input or do not accept BF near 0, modeling with an enlarged hydronic coil, with water temperature reset to meet the required supply air temperature, may be better than modeling with a direct expansion system coil unless the direct expansion coil model is capable of modulating continuously from 0% to 100% output.

5.5.1.1.4 Zone Definition. For programs that are not able to specify zone loads directly and are not able to define an adiabatic zone with negative sensible internal gains, skip the remainder of this section, and model the zone by applying the alternative nonadiabatic zone specified in Section 5.5.1.1.5.

Table 5-60 Case AE101 Zone Loads

Zone Load	SI Units	I-P Units
Zone sensible heating load [a]	2931 W	10000 Btu/h
Zone latent load [a,b]	586.1 W	2000 Btu/h

a. Zone sensible heating load and zone latent load are defined in Section 3.1.
b. Zone latent load is applied at the zone air temperature specified in Section 5.5.1.1.6.

A single zone shall be modeled. The zone shall be defined by an ideal steady-state sensible heating load and a latent load as specified in Table 5-60.

Zone sensible heating load, as defined in Section 3.1, shall be modeled directly or as negative sensible internal gains within an adiabatic zone. Zone latent load, as defined in Section 3.1, is applied at the given zone air temperature. If the program being tested allows, intermediate output shall be checked to verify that the specified zone loads are modeled precisely.

Informative Note: Latent internal gains can be modeled directly or by specifying the number of occupants in a zone and the latent load per person.

Informative Note: Some programs may allow negative sensible internal gains, which can be applied to create a heating load. The physical process can be visualized as heat transfer associated with a zone with a refrigeration case that has a remote compressor.

Informative Note: There are many approaches to achieving the zone load requirements. The preferred approach is to model the constant sensible and latent zone loads directly as loads on the system with no physical zone, or as internal gains to a zone with an adiabatic thermal envelope.

5.5.1.1.5 Alternate Zone Specification. If the program being tested was able to model this test case as specified in Section 5.5.1.1.4, skip this section and proceed to Section 5.5.1.1.6. For programs that require a nonadiabatic zone or that are not able to model negative internal gains, the alternate zone specified in this section and its subsections shall be applied. When implementing this zone definition, zone loads in the model output shall be examined, and input adjustments shall be permitted, such that modeled zone loads (internal gains plus zone envelope heat transfer) match those specified in Section 5.5.1.1.4.

Informative Note: Specified zone loads vary among the test cases.

Informative Note: The zone geometry, constructions, and default combined surface coefficients are similar to those developed in Section 5.3.1, except insulation levels and internal gains assumptions are modified here.

5.5.1.1.5.1 Zone Geometry. The base zone geometry plan (see Figure 5-26) is a 6 × 8 m (19.685 × 26.247 ft) zone with 48 m^2 (516.67 ft^2) floor area. The wall height is 2.7 m (8.858 ft) and the zone air volume is 129.6 m^3 (4577 ft^3). The roof, floor, and four walls are specified with the exterior surface exposed to ambient air.

Informative Note: This is as if the entire zone were suspended above the ground.

Copyrighted material licensed to Sei Ito on 2020-06-26 for licensee's use only. All rights reserved. No further reproduction or distribution is permitted. Distributed by Techstreet for ASHRAE, www.techstreet.com

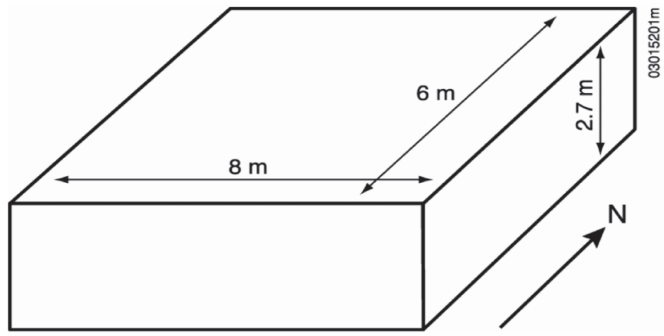

Figure 5-26 Alternate specification zone geometry.

Table 5-61 Case AE101 Component Construction—Roof, Wall, and Floor

	SI Units		I-P Units	
Element	**R, (m²·K)/W**	**U, W/(m²·K)**	**R, (h·ft²·°F)/Btu**	**U, Btu/(h·ft²·°F)**
Interior surface coefficient	0.1206	8.2900	0.6849	1.4600
Insulation	2.7000	0.3704	15.3306	0.0652
Exterior surface coefficient	0.0328	30.4872	0.1862	5.3693
Total air—air	**2.8534**	**0.3505**	**16.2018**	**0.0617**
Heat Loss Summary				
Component	**Area, m²**	**UA, W/K**	**Area [a], ft²**	**UA, Btu/(h·°F)**
Roof	48.0	16.822	516.67	31.890
Wall	75.6	26.494	813.75	50.226
Floor	48.0	16.822	516.67	31.890
Infiltration		0.000		0.000
Total	**123.6**	**43.316**	**1330.42**	**82.116**
Supplementary Internal Gains				
Sensible	82.9 W		283 Btu/h	
Latent [b]	586.1 W		2000 Btu/h	

a. I-P areas converted from SI values.
b. Supplementary latent internal gain is applied at the zone air temperature specified in Section 5.5.1.1.6.

5.5.1.1.5.2 Zone Envelope Thermal Properties. Table 5-61 lists the zone envelope construction and material properties in SI and I-P units, respectively.

Materials of the space shall have no thermal or moisture capacitance, and there is not moisture diffusion through these materials. If the software being tested requires inputs for thermal capacitance, moisture capacitance, or moisture diffusion, the minimum values the software being tested allows shall be applied.

Informative Note: When the alternate zone specification is modeled, the zone heat loss contributes to the zone sensible load but does not exactly match the test-case zone load specified in Section 5.5.1.1.4. Supplementary internal gains are specified in Section 5.5.1.1.5.3 so that total zone sensible load is as specified in Section 5.5.1.1.4.

5.5.1.1.5.3 Supplementary Internal Gains. To achieve the required test-case load using the alternate zone specification, the zone supplementary internal gains listed in Table 5-61 shall be modeled. Supplementary latent internal gains are applied at the given zone air temperature. So that the modeled sensible and latent zone loads for the program being tested agree with the values specified in Section 5.5.1.1.4, adjustment of the supplementary internal gains shall be permitted.

Informative Note: Latent internal gains can be modeled directly or by specifying the number of occupants and the latent load per person.

Informative Note: Program treatment of the zone thermal envelope, particularly surface heat transfer, may vary from the assumptions used here. It is recommended that model output be checked to verify that the correct zone loads are being

Copyrighted material licensed to Sei Ito on 2020-06-26 for licensee's use only.
All rights reserved. No further reproduction or distribution is permitted. Distributed by Techstreet for ASHRAE, www.techstreet.com

modeled and, if not, that adjustments be made to the internal gains inputs so that exactly correct loads are modeled.

5.5.1.1.5.4 Interior Combined Surface Coefficients. Interior combined surface coefficients shall be 8.29 W/(m^2·K) (1.46 Btu/[h·ft^2·°F]). This value shall be applied to the interior side of the exterior surfaces (walls, floor, and ceiling).

If the program being tested allows direct user input of combined interior surface coefficients, skip the remainder of this paragraph. If the program allows direct user input of convective surface coefficients but allows only automatically calculated surface infrared radiative exchange, the convective surface coefficient shall be 8.29 W/(m^2·K) (1.46 Btu/[h·ft^2·°F]) and the surface infrared emittance shall be 0 or as close to zero as the program allows. If the program does not allow direct user input of convective surface coefficients, the input infrared emittance shall be 0.9 and the convective surface coefficient that the program being tested automatically calculates shall be used.

Informative Note: The interior combined surface coefficient value is from the 2009 *ASHRAE Handbook—Fundamentals* [B-7].

5.5.1.1.5.5 Exterior Combined Surface Coefficients. Exterior combined surface coefficients shall be 30.4872 W/(m^2·K) (5.3694 Btu/[h·ft^2·°F]). This value shall be applied to all exterior surfaces, including the floor.

If the program being tested allows direct user input of combined exterior surface coefficients, skip the remainder of this paragraph. If the program allows direct user input of convective surface coefficients but allows only automatically calculated surface infrared radiative exchange, the convective surface coefficient shall be 30.4872 W/(m^2·K) (5.3694 Btu/[h·ft^2·°F]) and the surface infrared emittance shall be 0 or as close to zero as the program allows. If the program does not allow direct user input of convective surface coefficients, the input infrared emittance shall be 0.9 and the convective surface coefficient that the program automatically calculates shall be used.

Informative Note: The exterior combined surface coefficient value corresponds with 4.3 m/s (9.62 miles/h) wind speed in the weather data for a rough (brick or rough plaster) surface[B-19,B-20].

5.5.1.1.6 Zone Temperature and Thermostat Set Point. The zone air temperature shall be as follows:

Zone dry-bulb temperature = 21.111°C (70.0°F)

5.5.1.1.6.1 There shall be no zone humidity control.

Informative Note: This means that the zone humidity floats in accordance with moisture in the outdoor air introduced by the system, zone latent load, and moisture removal by the mechanical system.

5.5.1.1.6.2 The thermostat shall sense only the zone air temperature; the thermostat itself shall not sense any radiant heat transfer exchange with the interior surfaces.

5.5.1.1.6.3 The controls for this system are ideal in that the equipment shall maintain the set point exactly when it is operating. There are no minimum ON or OFF time-duration requirements for the unit and no hysteresis control band (e.g., there is no ON at set point + x°C or OFF at set point – y°C). If the software being tested requires input for these, the minimum values the software being tested allows shall be used. To eliminate temperature offset so that the modeled zone air temperature agrees exactly with the test-case specification, adjustment of the modeled zone thermostat set point shall be permitted, and such adjustment shall be allowed to vary among test cases.

Table 5-62 Case AE101 Ambient Conditions

Ambient Condition	SI Units	I-P Units
Dry-bulb temperature	–29.0°C	–20.20°F
Dew-point temperature [a]	–29.0°C	–20.20°F
Solar radiation	None	
Wind speed	4.3 m/s	9.62 mph
Atmospheric pressure [b]	101.325 kPa	14.696 psia
Elevation (sea level) [b]	0 m	0 ft
Equivalent ambient moisture indicators[a]		
Humidity ratio	0.000260	0.000260
Wet-bulb temperature	–29.000°C	–20.200°F
Relative humidity	100.000%	100.000%
Relative humidity (TM2) [c]	100%	100%

a. ***Informative Note:*** Dew-point temperature is exact. The equivalent ambient moisture variables are calculated to the precision shown based on the real-gas model developed by ASHRAE RP-1485 [B-21] as implemented in the ASHRAE LibHuAirProp spreadsheet functions [B-22].

b. ***Informative Note:*** The weather data file indicates 0 m altitude, consistent with the given pressure. However, the weather file atmospheric pressure precision is limited to four digits by the weather file format such that 1013 millibars (101300 Pa) is listed in the weather file. The effect of modeling with 101325 versus 101300 Pa is negligible (<0.05% on cooling-coil latent loads) as described in Appendix A of the originating test suite adaptation report [B-6].

c. ***Informative Note:*** The weather data file relative humidity precision is limited to integer percent values by the weather file format and is not as precise as the other equivalent moisture variables. Among the test cases, weather file relative humidities differ from relative humidities specified in various tables of Section 5.5 by <0.22%. The effects of modeling with weather file relative humidities versus specified relative humidities or versus weather file (specified) dew-point temperatures are small (<0.3% on cooling-coil latent loads) as shown in Appendix A of the originating test suite adaptation report [B-6].

5.5.1.1.6.4 The thermostat is nonproportional.

Informative Note: A nonproportional thermostat operates such that when the conditioned zone air temperature exceeds the thermostat cooling set point, the heat extraction rate is assumed to equal the maximum capacity of the cooling equipment corresponding to environmental conditions at the time of operation. A proportional thermostat throttles the heat difference between the zone set point temperature and the actual zone temperature. A proportional thermostat model can be made to approximate a nonproportional thermostat model by setting a very small throttling range (the minimum allowed by the software being tested).

5.5.1.1.7 Ambient Conditions. The ambient conditions specified in Table 5-62 shall be used.

If the tested program does not allow constant steady-state ambient conditions to be input directly, the TMY2-format weather data provided with the following file shall be applied:

Copyrighted material licensed to Sei Ito on 2020-06-26 for licensee's use only. All rights reserved. No further reproduction or distribution is permitted. Distributed by Techstreet for ASHRAE, www.techstreet.com

AE101.TM2

These data are provided with the accompanying electronic media and are described in Normative Annex A1, Section A1.3.

Informative Note: Other cases call for different weather files as needed.

Informative Note: Some programs allow constant steady-state ambient conditions to be input directly for design-day calculations.

5.5.1.1.8 Output Requirements. The required outputs for this case shall be as specified in Section 6.5.1.

5.5.1.2 Fan-Coil (FC) System Parametric Variations. FC system noneconomizer cases shall be modeled as revisions to the FC system base-case model as follows:

Case	Basis for Case
AE103	AE101
AE104	AE101

Informative Note: It is recommended to double check the Case AE101 base-case inputs and to diagnose Case AE101 results disagreements before proceeding to the other test cases.

5.5.1.2.1 Case AE103: Low Cooling, Dry-Coil 1

Informative Note, Objective of the Test Case: Test model treatment of a four-pipe fan-coil air system with low sensible cooling load and cool, dry outdoor air.

Informative Note, Method of the Test Case: Use the Case AE101 model with modifications. Dry outdoor air and low sensible and latent loads used in the case ensure sensible-only cooling and isolate that portion of the cooling calculation. Compare cooling-coil loads with the QAS and with other appropriate test-case results.

5.5.1.2.1.1 Input Specification. This case shall be identical to Case AE101 (See Section 5.5.1.1) except for changes as follows:

a. **Zone and ambient parameters.** Zone and ambient parameters shall be modeled as specified in Table 5-63; only values that change are shown in the table.
b. **Weather data.** If the tested program does not allow constant steady-state ambient conditions to be input directly, use the TMY2-format weather data provided with the following file:

AE103.TM2

These data are provided with the accompanying electronic media and are described in Normative Annex A1, Section A1.3.

c. **Alternate zone definition parameters.** Programs using the alternate zone definition described in Section 5.5.1.1.5 shall apply changes to parameters as indicated in Table 5-64; only values that change are shown in the table. Check output, and adjust modeled internal gains so that total zone sensible cooling load (envelope sensible heat gains plus all sensible internal gains) equals that specified in Table 5-63, and zone latent cooling load (latent internal gains) equals that specified in Table 5-61 (Case AE101).

Table 5-63 Case AE103 Input Parameters

Ambient Input Parameters	SI Units	I-P Units
Ambient dry-bulb temperature	15.5°C	59.90°F
Ambient dew-point temperature [a]	–3.0°C	26.60°F
Equivalent ambient moisture indicators [a]		
Ambient humidity ratio	0.002948	0.002948
Ambient wet-bulb temperature	7.206°C	44.971°F
Ambient relative humidity	27.028%	27.028%
Ambient relative humidity (TM2)[b]	27%	27%
Zone Input Parameters		
Zone sensible cooling load [c]	1465 W	5000 Btu/h
Zone dry-bulb temperature [d]	23.333°C	74°F

a. ***Informative Note:*** Dew-point temperature is exact. The equivalent ambient moisture variables are calculated to the precision shown based on the real-gas model developed by ASHRAE RP-1485 [B-21] as implemented in the ASHRAE LibHuAirProp spreadsheet functions [B-22].
b. ***Informative Note:*** The weather data file relative humidity precision is limited to integer percent values by the weather file format and is not as precise as the other equivalent moisture variables. Among the test cases, weather file relative humidities differ from relative humidities specified in various tables of Section 5.5 by <0.22%. The effects of modeling with weather file relative humidities versus specified relative humidities or versus weather file (specified) dew-point temperatures are small (<0.3% on cooling-coil latent loads) as shown in Appendix A of the originating test suite adaptation report [B-6].
c. *Zone sensible cooling load* is defined in Section 3.1.
d. *Zone latent load*, as defined in Section 3.1, is applied at the given zone air temperature.

Table 5-64 Case AE103 Alternate Zone Definition Input Parameters

Input Parameter	SI Units	I-P Units
Insulation resistance	100.0 (m^2·K)/W	567.8 (h·ft^2·°F)/Btu
Supplementary internal gains—sensible	1478.8 W	5045.8 Btu/h

Informative Note: For cooling cases, a near-adiabatic zone is applied through use of insulation with high thermal resistance to facilitate precise system loading. Use of a near-adiabatic zone was not possible for the heating cases because some programs may not allow direct input of negative internal gains.

5.5.1.2.2 Case AE104: High Cooling, Wet-Coil 1

Informative Note, Objective of the Test Case: Test model treatment of a four-pipe fan-coil air system with high sensible cooling load and warm, humid outdoor air.

Informative Note, Method of the Test Case: Use the Case AE101 model with modifications. Humid ambient conditions and high sensible cooling load ensure a cold cooling coil with high latent load. Check cooling-coil leaving-air saturation to verify that the coil bypass factor is zero or near zero. Compare cooling-coil load with the QAS and with other appropriate test-case results.

Copyrighted material licensed to Sei Ito on 2020-06-26 for licensee's use only. All rights reserved. No further reproduction or distribution is permitted. Distributed by Techstreet for ASHRAE, www.techstreet.com

Table 5-65 Case AE104 Input Parameters

Ambient Input Parameters	SI Units	I-P Units
Ambient dry-bulb temperature	26.9°C	80.42°F
Ambient dew-point temperature [a]	22.1°C	71.78°F
Equivalent ambient moisture indicators [a]		
Ambient humidity ratio	0.016849	0.016849
Ambient wet-bulb temperature	23.441°C	74.194°F
Ambient relative humidity	75.023%	75.023%
Ambient relative humidity (TM2) [b]	75%	75%
Zone Input Parameters		
Zone sensible cooling load [c]	2931 W	10000 Btu/h
Zone dry-bulb temperature [d]	23.889°C	75°F

a. ***Informative Note:*** Dew-point temperature is exact. The equivalent ambient moisture variables are calculated to the precision shown based on the real-gas model developed by ASHRAE RP-1485[B-21] as implemented in the ASHRAE LibHuAirProp spreadsheet functions [B-22].

b. ***Informative Note:*** The weather data file relative humidity precision is limited to integer percent values by the weather file format and is not as precise as the other equivalent moisture variables. Among the test cases, weather file relative humidities differ from relative humidities specified in various tables of Section 5.5 by <0.22%. The effects of modeling with weather file relative humidities versus specified relative humidities or versus weather file (specified) dew-point temperatures are small (<0.3% on cooling-coil latent loads) as shown in Appendix A of the originating test suite adaptation report [B-6].

c. *Zone sensible cooling load* is defined in Section 3.1.

d. *Zone latent load*, as defined in Section 3.1, is applied at the given zone air temperature.

Table 5-66 Case AE104 Alternate Zone Definition Input Parameters

Input Parameter	SI Units	I-P Units
Insulation resistance	100.0 $(m^2 \cdot K)/W$	567.8 $(h \cdot ft^2 \cdot °F)/Btu$
Supplementary internal gains—sensible	2925.6 W	9982.4 Btu/h

5.5.1.2.2.1 Input Specification. This case shall be identical to Case AE101 (See Section 5.5.1.1) except for changes as follows:

a. **Zone and ambient parameters.** Zone and ambient parameters shall be modeled as specified in Table 5-65; only values that change are shown in the table.

b. **Weather data.** If the tested program does not allow constant steady-state ambient conditions to be input directly, use the TMY2-format weather data provided with the following file:

AE104.TM2

These data are provided with the accompanying electronic media and are described in Normative Annex A1, Section A1.3.

c. **Alternate zone definition parameters.** Programs using the alternate zone definition described in Section 5.5.1.1.5 shall apply changes to parameters as indicated in Table 5-66; only values that change are shown in the table. Check output, and adjust modeled internal gains so that total zone sensible cooling load (envelope sensible heat gains plus all sensible internal gains) equals that specified in Table 5-65, and zone latent cooling load (latent internal gains) equals that specified in Table 5-61 (Case AE101).

5.5.2 Single-Zone (SZ) Air System Cases (AE200 Series). The ability to model a single-zone (SZ) air system shall be tested as described in this section.

Informative Note: If the software being tested is capable of applying a variety of system models to address an SZ system, the system model that is most similar to the SZ system specified for Case AE201 below should be applied, and the selected system model should be capable of economizer function; the same selected system should be applied for all of the SZ system test cases. The user may test other possible modeling approaches (available system models) in this context as appropriate to the software being tested.

Informative Note: The progression of the first three test cases in this series (variation of zone loads, temperatures, and ambient conditions) follows the first three test cases in the AE100 (FC) series.

5.5.2.1 Case AE201: Base Case, High-Heating 1. Case AE201 shall be modeled as specified in this section and its subsections. The system configuration shall be modeled as presented in the schematic diagram of Figure 5-27. System input parameters shall be as described in the following sections.

Informative Note: The test specifications for the heating and cooling coils, zone definition, alternate zone specifications, zone temperature and thermostat set points, and ambient conditions (Sections 5.5.2.1.3 through 5.5.2.1.7) are the same as those for the FC system (Sections 5.5.1.1.3 through 5.5.1.1.7).

Informative Note, Objective of the Test Case: Test model treatment of a single-zone air system with high sensible heating load and cold exterior air.

Informative Note, Method of the Test Case: An SZ air system with a constant-volume supply fan, a return fan, and heating and cooling coils, conditions a single zone that has constant sensible and latent internal loads. The model is run at specified constant outdoor and indoor conditions. Resulting coil loads are compared with the QAS, with other appropriate test-case results (e.g., AE101), and with other example results (see Informative Annex B16, Section B16.7). The QAS is provided with the accompanying electronic media and is further discussed in Informative Annex B17, Section B17.3.

Informative Note: In this base case, no economizer function is modeled. The economizer function is tested in later cases.

5.5.2.1.1 Fan Operation. The system shall have a supply fan, return fan, and zone exhaust fan.

5.5.2.1.1.1 Supply Fan. The supply fan characteristics shall be as follows:

a. The fan is located downstream of the heating and cooling coils as specified in Figure 5-27.

b. The supply fan total pressure rise = 2.0 in. of water (498 Pa).

c. The fan provides a constant volume of supply air, measured at the fan inlet, as specified in Section 5.5.2.1.2.

d. The fan operates continuously.

e. Fan energy is transferred to the air that is being moved.

Copyrighted material licensed to Sei Ito on 2020-06-26 for licensee's use only. All rights reserved. No further reproduction or distribution is permitted. Distributed by Techstreet for ASHRAE, www.techstreet.com

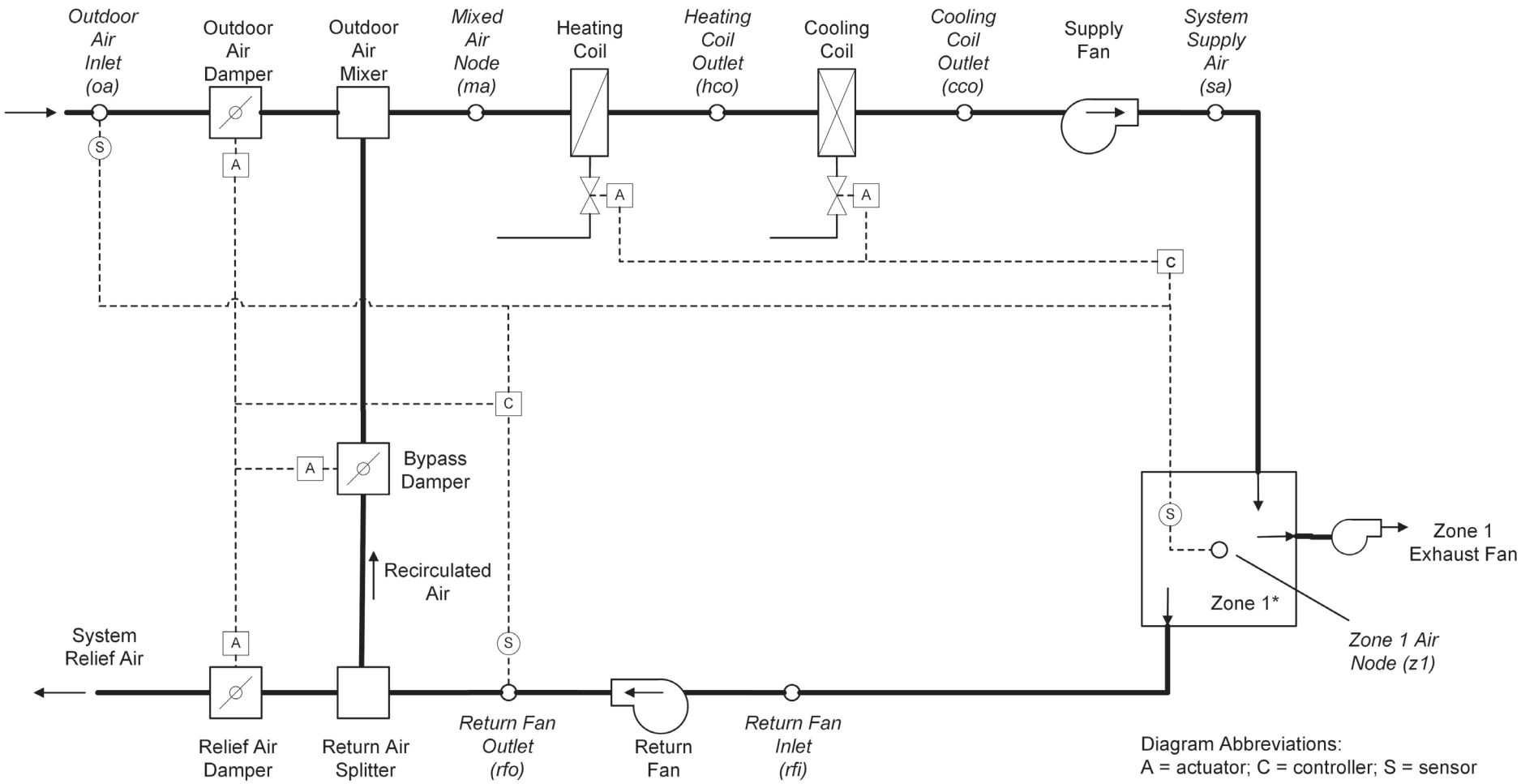

* Sensible and latent zone loads are specified for the base case in Section 5.5.2.1.4 and vary among the test cases. The zone thermostat senses only the zone air indoor dry-bulb temperature at the zone air node.

Figure 5-27 Single-zone (SZ) system schematic.

Informative Note: *Valves indicated are for a typical hydronic system and are not explicitly required by the test specification. Coils may be of any type as long as they meet the operational requirements of the test specification.*

Copyrighted material licensed to Sei Ito on 2020-06-26 for licensee's use only.
All rights reserved. No further reproduction or distribution is permitted. Distributed by Techstreet for ASHRAE, www.techstreet.com

Table 5-67 Case AE201 System and Zone Airflows

Input Parameter	SI Units	I-P Units
System supply airflow rate	283.17 L/s [a]	600 cfm [a]
Design system return airflow rate	188.78 L/s [b]	400 cfm [b]
Zone exhaust airflow rate	94.39 L/s [c]	200 cfm [c]

a. Volumetric airflow rate at the supply fan inlet conditions; see Section 5.5.2.1.2.1.
b. This is the volumetric airflow rate on which the return fan pressure rise (1 in. of water at 400 cfm) is based; see Section 5.5.2.1.1.2(b) and (c). The actual return airflow rate shall be permitted to vary from the design airflow rate and is defined in Section 5.5.2.1.2.3.
c. Volumetric airflow rate at the exhaust fan inlet conditions; see Section 5.5.2.1.2.2.

f. Fan motor and transmission drive energy loss is not transferred to the moving air.
g. (Fan heat to airstream) = H_o × [1/(Fan mechanical efficiency) – 1], where
   - H_o is the fan output power required to meet the specified airflow requirements; see H_o under *fan mechanical efficiency* in Section 3.1.
   - Fan mechanical efficiency = 0.7, constant value; *fan mechanical efficiency* is defined in Section 3.1.
h. (Fan motor input power) = H_o/[(Fan mechanical efficiency) × (Transmission drive efficiency) × (Motor efficiency)], where
   - 0 ≤ (Transmission drive efficiency) ≤ 1; *transmission drive efficiency* is defined in Section 3.1.
   - 0 ≤ (Motor efficiency) ≤ 1; *motor efficiency* is defined in Section 3.1.

   If the program being tested is not able to model the transmission drive and motor losses as occurring outside the airstream, the fan, transmission drive, and motor efficiency losses shall be specified to have a combined efficiency of 0.7 and to occur in the airstream.

   Informative Note: The airstream heat gain (fan heat) affects the test-case outputs, while the motor and transmission drive input energy do not; therefore, the transmission and motor efficiency may be any value as long as their heat is not imparted to the airstream and the fan mechanical efficiency = 0.7.

Informative Note: The supply fan characteristics are the same as for the FC system (see Section 5.5.1.1.1).

5.5.2.1.1.2 Return Fan. The return fan characteristics shall be as follows:

a. The fan is located downstream from the zone and before the return-air splitter as specified in Figure 5-27.
b. The return fan total pressure rise = 1.0 in. of water (249 Pa) at 400 cfm (188.78 L/s).
c. The return fan total pressure rise varies as

$$\text{Pressure rise (in. of water)} = (1.0 \text{ in. of water}) \times [(\text{Actual return fan cfm})/(400 \text{ cfm})]^2$$

d. The fan returns an air volume as specified in Section 5.5.2.1.2.
e. The fan operates continuously.
f. Fan energy is transferred to the air that is being moved.
g. Fan motor and transmission drive energy loss is not transferred to the moving air.
h. (Fan heat to airstream) = H_o × [1/(Fan mechanical efficiency) – 1], where
   - H_o is the fan output power required to meet the specified airflow requirements; see H_o under *fan mechanical efficiency* in Section 3.1.
   - Fan mechanical efficiency = 0.7, constant value; *fan mechanical efficiency* is defined in Section 3.1.
i. (Fan motor input power) = H_o/[(Fan mechanical efficiency) × (Transmission drive efficiency) × (Motor efficiency)], where
   - 0 ≤ (Transmission drive efficiency) ≤ 1; *transmission drive efficiency* is defined in Section 3.1.
   - 0 ≤ (Motor efficiency) ≤ 1; *motor efficiency* is defined in Section 3.1.

   If the program being tested is not able to model the transmission drive and motor losses as occurring outside the airstream, the fan, transmission drive, and motor efficiency losses shall be specified to have a combined efficiency of 0.7 and to occur in the airstream.

   Informative Note: The airstream heat gain (fan heat) affects the test-case outputs, while the motor and transmission drive input energy do not; therefore, the transmission and motor efficiency may be any value as long as their heat is not imparted to the airstream and the fan mechanical efficiency = 0.7.

5.5.2.1.1.3 Exhaust Fan. The zone exhaust fan shall maintain airflow as specified in Section 5.5.2.1.2.

Informative Note: Exhaust fan details are not defined explicitly, as the exhaust fan's characteristics have no impact on the results of the test case.

5.5.2.1.1.4 Programs with Predetermined Fan Modeling Assumptions. Programs with predetermined fan modeling assumptions shall be permitted to apply those assumptions.

Informative Note: For example, a program may model the return air fan pressure increase using its default assumptions if they are not normally adjustable by a typical program user.

5.5.2.1.2 Airflows. System and zone airflows shall be as shown in Table 5-67 and the following subsections.

5.5.2.1.2.1 System Supply Air. The system supply airflow rate shall be volumetrically constant and is measured at the supply fan inlet.

Informative Note: As the temperature and humidity ratio of the air entering the supply fan change, the specific volume of that air changes. This means that the mass flow rate of supply air, while constant for a given steady-state test case, varies among the test cases based on fan inlet conditions. The mass flow rate of the zone supply air is equal to that of the system supply air.

Informative Note: The QAS calculates the system mass flow rate from the volumetric flow using the local specific volume of air entering the supply fan. Results differences versus the QAS can be caused by differences in the method and assumptions a tested program uses to convert volumetric flow to mass flow. Example results for the QAS, including detailed outputs (e.g., mass flow rate, specific volume, enthalpy) at specific system locations, are provided in Informative

Copyrighted material licensed to Sei Ito on 2020-06-26 for licensee's use only. All rights reserved. No further reproduction or distribution is permitted. Distributed by Techstreet for ASHRAE, www.techstreet.com

Annex B16, Section B16.7; assumptions of the QAS for converting volumetric flows to mass flows are provided in Part II of the originating test suite adaptation report [B-6].

5.5.2.1.2.2 Zone Exhaust Air. The zone exhaust airflow rate shall be volumetrically constant and is measured at the exhaust fan inlet conditions.

Informative Note: The QAS calculates the exhaust air mass flow rate from the volumetric flow using the local specific volume of the air entering the exhaust fan (i.e., the zone air properties); see Part II of the originating test suite adaptation report [B-6].

Informative Note: As the temperature and humidity ratio of the air entering the exhaust fan change, the specific volume of that air changes. This means that the mass flow rate of exhaust air, while constant for a given steady-state test case, varies among the test cases based on zone conditions.

5.5.2.1.2.3 Return Airflow. The return airflow rate shall be the air volume, as measured at the return fan inlet, necessary to move an air mass equal to the zone supply mass flow minus the zone exhaust mass flow.

Informative Note: The return fan volumetric flow rate in the QAS is calculated from the return air mass flow using the specific volume of air entering the return fan; see Part II of the originating test suite adaptation report [B-6]. The return fan volumetric flow varies with the return air mass flow and the specific volume of the air entering the return fan.

5.5.2.1.2.4 Outdoor Air. The flow of outdoor air shall be introduced at a mass flow rate equal to the zone exhaust air mass flow rate. For programs that do not precisely apply the specified mass flow balance, introduction of outdoor air to replace the specified exhaust airflow (see Table 5-67), applying the tested program's specific assumptions regarding this calculation, shall be permitted.

Informative Note: Greater amounts of outdoor air may be required in other test cases applying economizer control logic.

5.5.2.1.2.5 Frictionless Ducts, Coils, and Dampers. Airflow through ducts, coils, and dampers shall be frictionless such that there shall be no pressure drops through these components. If the software being tested does not allow frictionless components, the model shall apply the least amount of friction in these components that the software being tested allows.

Informative Note: Modeling of fan heat is as described previously in Section 5.5.2.1.1.

5.5.2.1.2.6 HVAC System Component Air Leakage and Heat Loss. HVAC system components, including ducts, mixing boxes, dampers, fans, and coils, shall have no air leakage and shall have no heat exchange (gains or losses) with their external surroundings. If the software being tested does not allow zero system air leakage or zero external heat gains or losses for HVAC system components, the model shall apply the least amount of air leakage and external heat exchange that the software being tested allows.

Informative Note: Modeling of exhaust and outdoor airflows is as described previously in Sections 5.5.2.1.2.2 and 5.5.2.1.2.4. Modeling of heating and cooling coils is as described in Section 5.5.2.1.3.

5.5.2.1.3 Operation of Heating and Cooling Coils. The heating and cooling coils shall be modeled as specified for the FC system test base case in Section 5.5.1.1.3.

5.5.2.1.4 Zone Definition. For programs that are not able to specify zone loads directly and are not able to define an adiabatic zone with negative internal gains, skip the remainder of this section, and model the zone by applying the alternative nonadiabatic zone specified in Section 5.5.2.1.5.

A single zone shall be modeled as specified for the FC system test base case in Section 5.5.1.1.4.

5.5.2.1.5 Alternate Zone Specification. If the program being tested was able to model this test case as specified in Section 5.5.2.1.4, skip this section and proceed to Section 5.5.2.1.6. For programs that require nonadiabatic zones or are not able to model negative internal gains, the alternate zone specification for the FC system test base case in Section 5.5.1.1.5 shall be applied.

5.5.2.1.6 Zone Temperature and Thermostat Set Point. These shall be the same as for the FC system test base case as specified in Section 5.5.1.1.6.

5.5.2.1.7 Ambient Conditions. The ambient conditions shall be the same as for the FC system test base case as specified in Section 5.5.1.1.7.

5.5.2.1.8 Output Requirements. The required outputs for this case shall be as specified in Section 6.5.2.

5.5.2.2 Single-Zone (SZ) System Parametric Variations, No Economizer. SZ system noneconomizer cases shall be modeled as revisions to the SZ system base-case model as follows:

Case	Basis for Case
AE203	AE201
AE204	AE201
AE205	AE201
AE206	AE201

Informative Note: It is recommended to double check the Case AE201 base-case inputs and to diagnose Case AE201 results disagreements before proceeding to the other test cases.

5.5.2.2.1 Case AE203: Low Cooling, Dry-Coil 1

Informative Note, Objective of the Test Case: Test model treatment of a single-zone air system with low sensible cooling load and cool, dry outdoor air.

Informative Note, Method of the Test Case: Use the Case AE201 model with modifications. Dry outdoor air and low sensible and latent loads used in the case ensure sensible-only cooling and isolate that portion of the cooling calculation. Compare cooling-coil loads with the QAS and with other appropriate test-case results.

5.5.2.2.1.1 Input Specification. This case shall be identical to Case AE201 (see Section 5.5.2.1) except for changes as follows:

a. **Zone and ambient parameters.** Zone and temperature parameters shall be modeled as specified in Table 5-68; only values that change are shown in the table.

Copyrighted material licensed to Sei Ito on 2020-06-26 for licensee's use only. All rights reserved. No further reproduction or distribution is permitted. Distributed by Techstreet for ASHRAE, www.techstreet.com

Table 5-68 Case AE203 Input Parameters

Ambient Input Parameters	SI Units	I-P Units
Ambient dry-bulb temperature	15.5°C	59.90°F
Ambient dew-point temperature [a]	–3.0°C	26.60°F
Equivalent ambient moisture indicators [a]		
Ambient humidity ratio	0.002948	0.002948
Ambient wet-bulb temperature	7.206°C	44.971°F
Ambient relative humidity	27.028%	27.028%
Ambient relative humidity (TM2) [b]	27%	27%
Zone Input Parameters		
Zone sensible cooling load [c]	1465 W	5000 Btu/h
Zone dry-bulb temperature [d]	23.333°C	74°F

a. ***Informative Note:*** Dew-point temperature is exact. The equivalent ambient moisture variables are calculated to the precision shown based on the real-gas model developed by ASHRAE RP-1485[B-21] as implemented in the ASHRAE LibHuAirProp spreadsheet functions [B-22].

b. ***Informative Note:*** The weather data file relative humidity precision is limited to integer percent values by the weather file format and is not as precise as the other equivalent moisture variables. Among the test cases, weather file relative humidities differ from relative humidities specified in various tables of Section 5.5 by <0.22%. The effects of modeling with weather file relative humidities versus specified relative humidities or versus weather file (specified) dew-point temperatures are small (<0.3% on cooling-coil latent loads) as shown in Appendix A of the originating test suite adaptation report [B-6].

c. *Zone sensible cooling load* is defined in Section 3.1.

d. *Zone latent load*, as defined in Section 3.1, is applied at the given zone air temperature.

Table 5-69 Case AE203 Alternate Zone Definition Input Parameters

Input Parameter	SI Units	I-P Units
Insulation resistance	100.0 (m^2·K)/W	567.8 (h·ft^2·°F)/Btu
Supplementary internal gains—sensible	1478.8 W	5045.8 Btu/h

b. **Weather data.** If the tested program does not allow constant steady-state ambient conditions to be input directly, use the TMY2-format weather data provided with the following file:

AE103.TM2

These data are provided with the accompanying electronic media and are described in Normative Annex A1, Section A1.3.

c. **Alternate zone definition parameters.** Programs using the alternate zone definition described in Section 5.5.2.1.5 shall apply changes to parameters as indicated in Table 5-69; only values that change are shown in the table. Check output, and adjust modeled internal gains so that total zone sensible cooling load (envelope sensible heat gains plus all sensible internal gains) equals that specified in Table 5-68, and zone latent cooling load (latent internal gains) equals that specified in Table 5-61 (Case AE101).

Informative Note: For cooling cases, a near-adiabatic zone is applied, through use of insulation with high thermal resistance, to facilitate precise system loading. Use of a near-adiabatic zone was not possible for the heating cases because some programs may not allow direct input of negative internal gains.

5.5.2.2.2 Case AE204: High Cooling, Wet-Coil 1

Informative Note, Objective of the Test Case: Test model treatment of a single-zone air system with high sensible cooling load and warm, humid outdoor air.

Informative Note, Method of the Test Case: Use the Case AE201 model with modifications. Humid ambient conditions and high sensible cooling load ensure a cold cooling coil with high latent loads. Check the cooling-coil leaving-air saturation to verify that the coil bypass factor is zero or near zero. Compare cooling-coil loads with QAS and with other appropriate test-case results.

5.5.2.2.2.1 Input Specification. This case shall be identical to Case AE201 (See Section 5.5.2.1) except for changes as follows:

a. **Zone and ambient parameters.** Zone and ambient parameters shall be modeled as specified in Table 5-70; only values that change are shown in the table.

b. **Weather data.** If the tested program does not allow constant steady-state ambient conditions to be input directly, use the TMY2-format weather data provided with the following file:

AE104.TM2

These data are provided with the accompanying electronic media and are described in Normative Annex A1, Section A1.3.

c. **Alternate zone definition parameters.** Programs using the alternate zone definition described in Section 5.5.2.1.5 shall apply changes to parameters as indicated in Table 5-71; only values that change are shown in the table. Check output, and adjust modeled internal gains so that total zone sensible cooling load (envelope sensible heat gains plus all sensible internal gains) equals that specified in Table 5-70, and zone latent cooling load (latent internal gains) equals that specified in Table 5-61 (Case AE101).

5.5.2.2.3 Case AE205: Low Cooling, Dry-Coil 1

Informative Note, Objective of the Test Case: Generate results for a single-zone air system without enthalpy economizer, applying low sensible cooling load and warm, dry outdoor air to compare with results for the same system with enthalpy economizer (Case AE245).

Informative Note, Method of the Test Case: Use the Case AE201 model with modifications. Case AE205 applies ambient conditions with a low wet-bulb temperature to ensure that the economizer operates when it is specified in Case AE245. Compare cooling-coil loads with the QAS and with results for Case AE245 (which includes an enthalpy economizer system).

Copyrighted material licensed to Sei Ito on 2020-06-26 for licensee's use only. All rights reserved. No further reproduction or distribution is permitted. Distributed by Techstreet for ASHRAE, www.techstreet.com

Table 5-70 Case AE204 Input Parameters

Ambient Input Parameters	SI Units	I-P Units
Ambient dry-bulb temperature	26.9°C	80.42°F
Ambient dew-point temperature [a]	22.1°C	71.78°F
Equivalent ambient moisture indicators [a]		
Ambient humidity ratio	0.016849	0.016849
Ambient wet-bulb temperature	23.441°C	74.194°F
Ambient relative humidity	75.023%	75.023%
Ambient relative humidity (TM2) [b]	75%	75%
Zone Input Parameters		
Zone sensible cooling load [c]	2931 W	10000 Btu/h
Zone dry-bulb temperature [d]	23.889°C	75°F

a. ***Informative Note:*** Dew-point temperature is exact. The equivalent ambient moisture variables are calculated to the precision shown based on the real-gas model developed by ASHRAE RP-1485[B-21] as implemented in the ASHRAE LibHuAirProp spreadsheet functions [B-22].

b. ***Informative Note:*** The weather data file relative humidity precision is limited to integer percent values by the weather file format and is not as precise as the other equivalent moisture variables. Among the test cases, weather file relative humidities differ from relative humidities specified in various tables of Section 5.5 by <0.22%. The effects of modeling with weather file relative humidities versus specified relative humidities or versus weather file (specified) dew-point temperatures are small (<0.3% on cooling-coil latent loads) as shown in Appendix A of the originating test suite adaptation report [B-6].

c. *Zone sensible cooling load* is defined in Section 3.1.

d. *Zone latent load*, as defined in Section 3.1, is applied at the given zone air temperature.

Table 5-71 Case AE204 Alternate Zone Definition Input Parameters

Input Parameter	SI Units	I-P Units
Insulation resistance	100.0 $(m^2 \cdot K)/W$	567.8 $(h \cdot ft^2 \cdot °F)/Btu$
Supplementary internal gains—sensible	2925.6 W	9982.4 Btu/h

5.5.2.2.3.1 Input Specification. This case shall be identical to Case AE201 (see Section 5.5.2.1) except for changes as follows:

a. **Zone and ambient parameters.** Zone and ambient parameters shall be modeled as specified in Table 5-72; only values that change are shown in the table.

b. **Weather data.** If the tested program does not allow constant steady-state ambient conditions to be input directly, use the TMY2-format weather data provided with the following file:

AE105.TM2

These data are provided with the accompanying electronic media and are described in Normative Annex A1, Section A1.3.

c. **Alternate zone definition parameters.** Programs using the alternate zone definition described in Section 5.5.2.1.5 shall apply changes to parameters as indicated in Table 5-73; only values that change are shown in the table. Check output, and adjust modeled internal gains so that total zone sensible cooling load (envelope sensible heat gains plus all sensible internal gains) equals that specified in Table 5-72, and zone latent cooling load (latent internal gains) equals that specified in Table 5-61 (Case AE101).

5.5.2.2.4 Case AE206: Low Cooling, Wet-Coil 1

Informative Note, Objective of the Test Case: Generate results for a single-zone air system without dry-bulb economizer, applying low sensible cooling load and warm, humid outdoor air conditions to compare with results for the same system with dry-bulb economizer (Case AE226).

Informative Note, Method of the Test Case: Use the Case AE201 model with modifications. Case AE206 applies an ambient dry-bulb temperature that ensures the economizer operates when it is specified in Case AE226. Humid ambient conditions and high sensible cooling load ensure a cold cooling coil with high latent loads. Check the cooling-coil leaving-air saturation to verify that the coil bypass factor is zero or near zero. Compare cooling-coil loads with the QAS and with results for Case AE226 (which includes a comparative dry-bulb economizer system).

5.5.2.2.4.1 Input Specification. This case shall be identical to Case AE201 (see Section 5.5.2.1) except for changes as follows:

a. **Zone and ambient parameters.** Zone and ambient parameters shall be modeled as specified in Table 5-74; only values that change are shown in the table.

b. **Weather data.** If the tested program does not allow constant steady-state ambient conditions to be input directly, use the TMY2-format weather data provided with the following file:

AE106.TM2

These data are provided with the accompanying electronic media and are described in Normative Annex A1, Section A1.3.

c. **Alternate zone definition parameters.** Programs using the alternate zone definition described in Section 5.5.2.1.5 shall apply changes to parameters as indicated in Table 5-75; only values that change are shown in the table. Check output, and adjust modeled internal gains so that total zone sensible cooling load (envelope sensible heat gains plus all sensible internal gains) equals that specified in Table 5-74, and zone latent cooling load (latent internal gains) equals that specified in Table 5-61 (Case AE101).

5.5.2.3 Single-Zone System Parametric Variations, with Economizer. Base cases for the SZ system economizer cases shall be as follows:

Case	Basis for Case
AE226	AE206
AE245	AE205

5.5.2.3.1 Case AE226: Low Cooling, Wet-Coil 1 with Return-Air Comparative Dry-Bulb Economizer Outdoor Air Control. This test case shall be modeled with identical zone and system inputs as Case AE206 except for the exis-

Copyrighted material licensed to Sei Ito on 2020-06-26 for licensee's use only. All rights reserved. No further reproduction or distribution is permitted. Distributed by Techstreet for ASHRAE, www.techstreet.com

Copyrighted material licensed to Sei Ito on 2020-06-26 for licensee's use only.
All rights reserved. No further reproduction or distribution is permitted. Distributed by Techstreet for ASHRAE, www.techstreet.com

Table 5-72 Case AE205 Input Parameters

Ambient Input Parameters	SI Units	I-P Units
Ambient dry-bulb temperature	24.9°C	76.82°F
Ambient dew-point temperature [a]	2.4°C	36.32°F
Equivalent ambient moisture indicators [a]		
Ambient humidity ratio	0.004510	0.004510
Ambient wet-bulb temperature	13.027°C	55.449°F
Ambient relative humidity	23.050%	23.050%
Ambient relative humidity (TM2) [b]	23%	23%
Zone Input Parameters		
Zone sensible cooling load [c]	1465 W	5000 Btu/h
Zone dry-bulb temperature [d]	23.333°C	74°F

a. ***Informative Note:*** Dew-point temperature is exact. The equivalent ambient moisture variables are calculated to the precision shown based on the real-gas model developed by ASHRAE RP-1485[B-21] as implemented in the ASHRAE LibHuAirProp spreadsheet functions [B-22].

b. ***Informative Note:*** The weather data file relative humidity precision is limited to integer percent values by the weather file format and is not as precise as the other equivalent moisture variables. Among the test cases, weather file relative humidities differ from relative humidities specified in various tables of Section 5.5 by <0.22%. The effects of modeling with weather file relative humidities versus specified relative humidities or versus weather file (specified) dew-point temperatures are small (<0.3% on cooling-coil latent loads) as shown in Appendix A of the originating test suite adaptation report [B-6].

c. *Zone sensible cooling load* is defined in Section 3.1.

d. *Zone latent load*, as defined in Section 3.1, is applied at the given zone air temperature.

Table 5-73 Case AE205 Alternate Zone Definition Input Parameters

Input Parameter	SI Units	I-P Units
Insulation resistance	100.0 (m^2·K)/W	567.8 (h·ft^2·°F)/Btu
Supplementary internal gains—sensible	1462.7 W	4990.8 Btu/h

Table 5-74 Case AE206 Input Parameters

Ambient Input Parameters	SI Units	I-P Units
Ambient dry-bulb temperature	23.0°C	73.40°F
Ambient dew-point temperature [a]	20.9°C	69.62°F
Equivalent ambient moisture indicators [a]		
Ambient humidity ratio	0.015625	0.015625
Ambient wet-bulb temperature	21.523°C	70.741°F
Ambient relative humidity	87.968%	87.968%
Ambient relative humidity (TM2) [b]	88%	88%
Zone Input Parameters		
Zone sensible cooling load [c]	1465 W	5000 Btu/h
Zone dry-bulb temperature [d]	23.333°C	74°F

a. ***Informative Note:*** Dew-point temperature is exact. The equivalent ambient moisture variables are calculated to the precision shown based on the real-gas model developed by ASHRAE RP-1485[B-21] as implemented in the ASHRAE LibHuAirProp spreadsheet functions [B-22].

b. ***Informative Note:*** The weather data file relative humidity precision is limited to integer percent values by the weather file format and is not as precise as the other equivalent moisture variables. Among the test cases, weather file relative humidities differ from relative humidities specified in various tables of Section 5.5 by <0.22%. The effects of modeling with weather file relative humidities versus specified relative humidities or versus weather file (specified) dew-point temperatures are small (<0.3% on cooling-coil latent loads) as shown in Appendix A of the originating test suite adaptation report [B-6].

c. *Zone sensible cooling load* is defined in Section 3.1.

d. *Zone latent load*, as defined in Section 3.1, is applied at the given zone air temperature.

Table 5-75 Case AE206 Alternate Zone Definition Input Parameters

Input Parameter	SI Units	I-P Units
Insulation resistance	100.0 (m^2·K)/W	567.8 (h·ft^2·°F)/Btu
Supplementary internal gains—sensible	1465.4 W	5000.0 Btu/h

tence of a return-air comparative dry-bulb temperature economizer as described below.

Informative Note, Objective of the Test Case: Test model treatment of a single-zone air system with return-air comparative dry-bulb temperature economizer at low sensible cooling load and warm, humid outdoor air conditions.

Informative Note, Method of the Test Case: Use the Case AE206 model as defined in Section 5.5.2.2.4, and add the economizer as described here. Compare cooling-coil loads with the QAS and with results for Case AE206.

Informative Note: For the given economizer control logic, at the given steady-state operating conditions, some cooling loads are increased by varying amounts.

5.5.2.3.1.1 Input Specification. Case AE226 shall be identical to Case AE206 (see Section 5.5.2.2.4) except for the addition of a return-air comparative dry-bulb temperature economizer outdoor air control as specified in Section 5.5.2.3.1.1.1.

5.5.2.3.1.1.1 Return-Air Comparative Dry-Bulb Economizer Outdoor Air Control. When the economizer is ON, the outdoor air shall increase until either the cooling-coil sensible load is eliminated or the outdoor air is 100% of the supply airflow; if the economizer control is not able to satisfy the cooling-coil sensible load, the cooling coil shall operate, along with the economizer, to meet the remaining cooling-coil sensible load. The air system dampers (see Figure 5-27) shall be adjusted using economizer control based on outdoor and return-air dry-bulb temperature as specified below.

- Economizer = OFF IF ODB > RAT OR ODB ≤ $ODB_{econo,min}$. In this configuration, the outdoor air mass flow rate shall equal the combined zone exhaust air mass flows.
  - Coil = ON IF T_{zone} > zone thermostat set point; see Section 5.5.1.1.3(c).
- Economizer = ON IF RAT ≥ ODB > $ODB_{econo,min}$.

- Coil = ON IF T_{zone} > zone thermostat set point; see Section 5.5.1.1.3(c). In this configuration, the mixed air shall be 100% outdoor air.
- Coil = OFF IF T_{zone} ≤ zone thermostat set point; see Section 5.5.1.1.3(c). In this configuration, the air system dampers shall modulate the flow of outdoor air to meet the zone thermostat set point, and the outdoor airflow shall be permitted to vary from 100% outdoor air to the minimum flow necessary to replace the zone exhaust air mass flow.

where for

- Economizer = ON, outdoor air shall be provided as needed up to 100% outdoor air, but not less than the minimum required outdoor airflow rate at any time.
- Economizer = OFF, outdoor air shall be provided at the minimum required outdoor airflow rate.
- Coil = ON, the cooling coil shall operate only as necessary to satisfy the cooling-coil sensible load not compensated by the economizer.
- Coil = OFF, the cooling coil shall not operate.

and where

- ODB is outdoor air dry-bulb temperature.
- $ODB_{econo,min}$ is the outdoor dry-bulb temperature where at the minimum required outdoor airflow rate T_{zone} = zone thermostat set point.
- RAT is return air dry-bulb temperature at the return fan outlet.
- T_{zone} is zone air dry-bulb temperature. As used above, it is the zone air temperature if the coil did not operate.

Informative Note: Because the cooling coil activates (cooling-coil load occurs) when T_{zone} rises above the thermostat set point, an equivalent economizer control scheme is

- Economizer = OFF AND Coil = ON IF cooling-coil sensible load > 0 AND ODB > RAT.
- Economizer = ON AND Coil = ON IF cooling-coil sensible load > 0 AND ODB ≤ RAT AND all cooling-coil sensible load is NOT compensated by the economizer. (In this configuration, the mixed air is 100% outdoor air.)
- Economizer = ON AND Coil = OFF IF cooling-coil sensible load > 0 AND ODB ≤ RAT AND all cooling-coil sensible load is compensated by the economizer. (In this configuration, the air system dampers modulate so that outdoor airflow is between 100% outdoor air and the minimum flow necessary to replace the zone exhaust airflow.)
- Economizer = OFF AND Coil = OFF IF cooling-coil sensible load = 0.

5.5.2.3.2 Case AE245: Low Cooling, Dry-Coil 1 with Return-Air Comparative Enthalpy Economizer Outdoor Air Control. This test case shall be modeled with identical zone and system inputs as Case AE205 except for the existence of a return-air comparative enthalpy economizer as described below.

Informative Note, Objective of the Test Case: Test model treatment of a single-zone air system with return-air comparative enthalpy economizer at low sensible cooling load and warm, dry outdoor air conditions.

Informative Note, Method of the Test Case: Use the Case AE205 model as defined in Section 5.5.2.2.3 and add the economizer as described here. Compare cooling-coil loads with the QAS and with results for Case AE205.

Informative Note: For the given economizer control logic, at the given steady-state operating conditions, some cooling loads are increased by varying amounts.

5.5.2.3.2.1 Input Specification. Case AE245 shall be identical to Case AE205 (see Section 5.5.2.2.3) except for the addition of a return-air comparative enthalpy economizer outdoor air control as specified in Section 5.5.2.3.2.1.1.

5.5.2.3.2.1.1 Return-Air Comparative Enthalpy Economizer Outdoor Air Control. When the economizer is ON, the outdoor air shall increase until either the cooling-coil sensible load is eliminated or the outdoor air is 100% of the supply airflow; if the economizer control is not able to satisfy the cooling-coil sensible load, the cooling coil shall operate, along with the economizer, to meet the remaining cooling-coil sensible load. The air system dampers (see Figure 5-27) shall be adjusted using economizer control based on outdoor and return air enthalpy as specified below.

- Economizer = OFF IF OAE > RAE OR ODB ≤ $ODB_{econo,min}$. In this configuration, the outdoor air mass flow rate shall equal the combined zone exhaust air mass flows.
  - Coil = ON IF T_{zone} > zone thermostat set point; see Section 5.5.1.1.3(c).
- Economizer = ON IF OAE ≤ RAE AND ODB > $ODB_{econo,min}$.
  - Coil = ON IF T_{zone} > zone thermostat set point; see Section 5.5.1.1.3(c). In this configuration, the mixed air shall be 100% outdoor air.
  - Coil = OFF IF T_{zone} ≤ zone thermostat set point; see Section 5.5.1.1.3(c). In this configuration, the air system dampers shall modulate the flow of outdoor air to meet the zone thermostat set point, and the outdoor airflow shall be permitted to vary from 100% outdoor air to the minimum flow necessary to replace the zone exhaust air mass flow.

where for

- Economizer = ON, outdoor air shall be provided as needed up to 100% outdoor air but not less than the minimum required outdoor airflow rate at any time.
- Economizer = OFF, outdoor air shall be provided at the minimum required outdoor airflow rate.
- Coil = ON, the cooling coil shall operate only as necessary to satisfy the cooling-coil sensible load not compensated by the economizer.
- Coil = OFF, the cooling coil shall not operate.

Copyrighted material licensed to Sei Ito on 2020-06-26 for licensee's use only. All rights reserved. No further reproduction or distribution is permitted. Distributed by Techstreet for ASHRAE, www.techstreet.com

and where

- OAE is outdoor air enthalpy.
- $ODB_{econo,min}$ is the outdoor dry-bulb temperature where at the minimum required outdoor airflow rate T_{zone} = zone thermostat set point.
- RAE is return air enthalpy at the return fan outlet.
- T_{zone} is zone air dry-bulb temperature. As used above, it is the zone air temperature if the coil did not operate.

Informative Note: Because the cooling coil activates (cooling-coil load occurs) when T_{zone} rises above the thermostat set point, an equivalent economizer control scheme is

- Economizer = OFF AND Coil = ON IF cooling-coil sensible load > 0 AND OAE > RAE.
- Economizer = ON AND Coil = ON IF cooling-coil sensible load > 0 AND OAE ≤ RAE AND all cooling-coil sensible load is NOT compensated by the economizer. (In this configuration, the mixed air is 100% outdoor air.)
- Economizer = ON AND Coil = OFF IF cooling-coil sensible load > 0 AND OAE ≤ RAE AND all cooling-coil sensible load is compensated by the economizer. (In this configuration, the air system dampers modulate so that outdoor air is between 100% outdoor air and the minimum flow necessary to replace the zone exhaust airflow.)
- Economizer = OFF AND Coil = OFF IF cooling-coil sensible load = 0.

5.5.3 Constant-Volume (CV) Terminal Reheat System Cases (AE300 Series). The ability to model a CV terminal reheat air system serving multiple zones shall be tested as described in this section.

Informative Note: If the software being tested is capable of applying a variety of system models to address a CV system, the system model that is most similar to the system specified for Case AE301 below should be applied and the selected system model should be capable of economizer function; the same selected system should be applied for all of the CV system test cases. The user may test other possible modeling approaches (available system models) in this context as appropriate to the software being tested.

Informative Note: The progression of these test cases follows the AE200 series (SZ system) tests. The CV system serves two zones.

5.5.3.1 Case AE301: Base Case, High-Heating 1. Case AE301 shall be modeled as described in this section and its subsections. The system configuration shall be modeled as presented in the schematic diagram in Figure 5-28. System input parameters shall be as described in the following sections.

Informative Note, Objective of the Test Case: Test model treatment of a constant-volume terminal reheat air system with high sensible heating load and cold outdoor air.

Informative Note, Method of the Test Case: A CV air system conditions two zones that have constant sensible and latent internal loads. The system consists of a constant-volume supply fan, a return fan, preheat and cooling coils, and terminal reheat coils. The cooling coil provides cooling as needed to maintain the supply air temperature set point, and the reheat coils provide heating to maintain each zone temperature at its set point. The preheat coil operates as needed to prevent system supply air temperature from being too low. The model is run at specified constant outdoor and indoor conditions. Resulting coil loads are compared with the QAS and with other example results (see Informative Annex B16, Section B16.7). The QAS is provided with the accompanying electronic media and is further discussed in Informative Annex B17, Section B17.3.

Informative Note: In this base case, no economizer function is modeled; the economizer function is tested in later cases.

5.5.3.1.1 Fan Operation. The system shall have a supply fan, a return fan, and individual zone exhaust fans.

5.5.3.1.1.1 Supply Fan. The supply fan characteristics shall be as follows:

a. The fan is located downstream of the heating and cooling coils as specified in Figure 5-28.
b. The supply fan total pressure rise = 2.0 in. of water (498 Pa).
c. The fan provides a constant volume of supply air, measured at the fan inlet, as specified in Section 5.5.3.1.2.
d. The fan operates continuously.
e. Fan energy is transferred to the air that is being moved.
f. Fan motor and transmission drive energy loss is not transferred to the moving air.
g. (Fan heat to airstream) = H_o × [1/(Fan mechanical efficiency) – 1], where
   - H_o is the fan output power required to meet the specified airflow requirements; see H_o under *fan mechanical efficiency* in Section 3.1.
   - Fan mechanical efficiency = 0.7, constant value; fan mechanical efficiency is defined in Section 3.1.
h. (Fan motor input power) = H_o/[(Fan mechanical efficiency) × (Transmission drive efficiency) × (Motor efficiency)], where
   - 0 ≤ (Transmission drive efficiency) ≤ 1; *transmission drive efficiency* is defined in Section 3.1.
   - 0 ≤ (Motor efficiency) ≤ 1; *motor efficiency* is defined in Section 3.1.

If the program being tested is not able to model the transmission drive and motor losses as occurring outside the airstream, the fan, transmission drive, and motor efficiency losses shall be specified to have a combined efficiency of 0.7 and to occur in the airstream.

Informative Note: The airstream heat gain (fan heat) affects the test-case outputs, while the motor and transmission drive input energy do not; therefore, the transmission and motor efficiency may be any value as long as their heat is not imparted to the airstream and the fan mechanical efficiency = 0.7.

Copyrighted material licensed to Sei Ito on 2020-06-26 for licensee's use only. All rights reserved. No further reproduction or distribution is permitted. Distributed by Techstreet for ASHRAE, www.techstreet.com

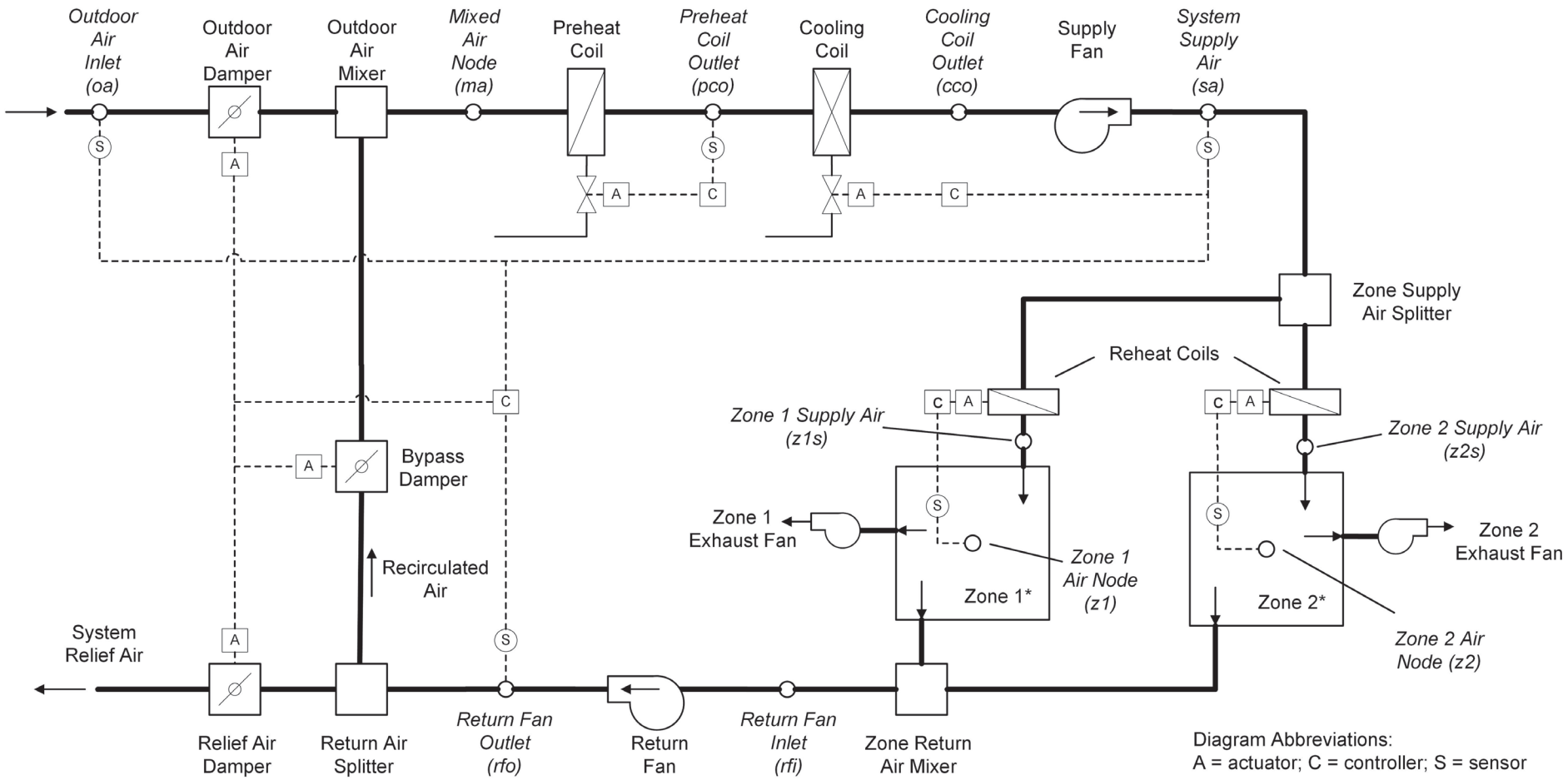

* Sensible and latent zone loads are specified for the base case in Section 5.5.3.1.4 and vary among the test cases. The zone thermostats sense only the zone air indoor dry-bulb temperature at their respective zone air nodes.

Figure 5-28 Constant-volume (CV) terminal reheat system schematic.

Informative Note: *Valves indicated are for a typical hydronic system and are not explicitly required by the test specification. Coils can be of any type as long as they meet the operational requirements of the test specification.*

Copyrighted material licensed to Sei Ito on 2020-06-26 for licensee's use only.
All rights reserved. No further reproduction or distribution is permitted. Distributed by Techstreet for ASHRAE, www.techstreet.com

Table 5-76 Case AE301 System and Zone Airflows

System Airflows	SI Units		I-P Units	
System supply airflow rate	613.53 L/s [a]		1300 cfm [a]	
Design system return airflow rate	377.56 L/s [b]		800 cfm [b]	
Zone Airflows	**Zone 1**	**Zone 2**	**Zone 1**	**Zone 2**
Nominal zone supply airflow rate	283.17 L/s [c]	330.36 L/s [c]	600 cfm [c]	700 cfm [c]
Zone supply air mass flow fraction	0.4615[d]	0.5385[e]	0.4615[d]	0.5385[e]
Zone exhaust airflow rate	94.39 L/s[f]	141.58 L/s[f]	200 cfm[f]	300 cfm[f]

a. Volumetric airflow rate at the supply fan inlet conditions; see Section 5.5.3.1.2.1.
b. This is the volumetric return airflow rate calculated from the *system supply airflow rate* minus the total *zone exhaust airflow rates*. It is the volumetric airflow rate on which the return fan pressure rise (1 in. of water at 800 cfm) is based; see Section 5.5.3.1.1.2(b) and (c). The actual return airflow rate shall be permitted to vary from the design airflow rate and is defined in Section 5.5.3.1.2.4.
c. The *nominal zone supply airflow rate* is the volume of air delivered to each zone using air conditions at the supply fan inlet. Actual zone supply volumetric airflow rates shall be permitted to vary from the nominal volumetric airflow rates and are defined by the zone supply air mass flow fractions and the corresponding local zone supply air properties.
d. ***Informative Note:*** Calculated from 600 cfm/1300 cfm; also see informative note accompanying Section 5.5.3.1.2.2.
e. ***Informative Note:*** Calculated from 700 cfm/1300 cfm; also see informative note accompanying Section 5.5.3.1.2.2.
f. Volumetric airflow rate at exhaust fan inlet conditions; see Section 5.5.3.1.2.3.

5.5.3.1.1.2 Return Fan. The return fan characteristics shall be as follows:

a. The fan is located downstream of the zone return air mixer and before the return air splitter as specified in Figure 5-28.
b. The return fan total pressure rise = 1.0 in. of water (249 Pa) at 800 cfm (377.56 L/s).
c. The return fan total pressure rise varies as

$$\text{Pressure rise (in. of water)} = (1.0 \text{ in. of water}) \times [(\text{Actual return fan cfm})/(800 \text{ cfm})]^2$$

d. The fan returns an air volume as specified in Section 5.5.3.1.2.
e. The fan operates continuously.
f. Fan energy is transferred to the air that is being moved.
g. Fan motor and transmission drive energy loss is not transferred to the moving air.
h. (Fan heat to airstream) = H_o × [1/(Fan mechanical efficiency) – 1], where
   - H_o is the fan output power required to meet the specified airflow requirements; see H_o under *fan mechanical efficiency* in Section 3.1.
   - Fan mechanical efficiency = 0.7, constant value; *fan mechanical efficiency* is defined in Section 3.1.
i. (Fan motor input power) = H_o/[(Fan mechanical efficiency) × (Transmission drive efficiency) × (Motor efficiency)], where
   - 0 ≤ (Transmission drive efficiency) ≤ 1; *transmission drive efficiency* is defined in Section 3.1.
   - 0 ≤ (Motor efficiency) ≤ 1; *motor efficiency* is defined in Section 3.1.

   If the program being tested is not able to model the transmission drive and motor losses as occurring outside the airstream, the fan, transmission drive, and motor efficiency losses shall be specified to have a combined efficiency of 0.7 and to occur in the airstream.

   Informative Note: The airstream heat gain (fan heat) affects the test-case outputs, while the motor and transmission drive input energy do not; therefore, the transmission and motor efficiency may be any value as long as their heat is not imparted to the airstream and the fan mechanical efficiency = 0.7.

5.5.3.1.1.3 Exhaust Fan. The zone exhaust fan shall maintain airflow as specified in Section 5.5.3.1.2.

Informative Note: Exhaust fan details are not defined explicitly, as the exhaust fan's characteristics have no impact on the results of the test case.

5.5.3.1.1.4 Programs with Predetermined Fan Modeling Assumptions. Programs with predetermined assumptions shall be permitted to apply those assumptions.

Informative Note: For example, a program may model the listed system supply airflow rate (see Section 5.5.3.1.2) using its default entering-air conditions if they are not normally adjustable by a typical program user.

5.5.3.1.2 Airflows. System and zone airflows shall be as shown in Table 5-76 and the following subsections.

5.5.3.1.2.1 System Supply Air. The system supply airflow rate shall be volumetrically constant and is measured at the supply fan inlet.

Informative Note: As the temperature and humidity ratio of the air entering the supply fan change, the specific volume of that air changes. This means that the mass flow rate of system supply air, while constant for a given steady-state test case, varies among the test cases based on fan inlet conditions. The combined mass flow rate of the zone air supplies is equal to that of the system supply air.

Informative Note: The QAS calculates the system mass flow rate from the volumetric flow using the local specific volume of air entering the supply fan. Results differences versus the QAS can be caused by differences in the method and assumptions a tested program uses to convert volumetric flow to mass flow. Example results for the QAS, including detailed outputs (e.g., mass flow rate, specific volume, enthalpy) at specific system locations, are provided in Informative Annex B16, Section B16.7; assumptions of the QAS for converting volumetric flows to mass flows are provided in Part II of the originating test suite adaptation report [B-6].

Copyrighted material licensed to Sei Ito on 2020-06-26 for licensee's use only. All rights reserved. No further reproduction or distribution is permitted. Distributed by Techstreet for ASHRAE, www.techstreet.com

5.5.3.1.2.2 Zone Supply Air. The zone supply air mass flow rates are defined by the nominal zone supply volumetric flow rates and the supply air specific volume at the supply fan inlet conditions.

Informative Note: The actual zone supply air volumetric flow varies as supply fan heat and terminal reheat increase the specific volume of the supply air away from the supply fan inlet conditions.

Informative Note: Listed zone supply air mass flow fractions (see Table 5-76) are the fraction of system supply air mass flow distributed to each zone. While the resulting zone volumetric airflow rates may vary from nominal values as noted above, the mass flow fractions remain constant.

5.5.3.1.2.3 Zone Exhaust Air. The zone exhaust airflow rates shall be volumetrically constant and are measured at the exhaust fan inlet conditions.

Informative Note: The QAS calculates the exhaust air mass flow rate from the volumetric flow using the local specific volume of the air entering the exhaust fan (i.e., the zone air properties); see Part II of the originating test suite adaptation report [B-6].

Informative Note: As the temperature and humidity ratio of the air entering the exhaust fan change, the specific volume of that air changes. This means that the mass flow rate of exhaust air, while constant for a given steady-state test case, varies among the test cases based on zone conditions.

5.5.3.1.2.4 Return Air. The system return airflow rate shall be the air volume, as measured at the return fan inlet, necessary to move an air mass equal to the zone supply mass flows minus the zone exhaust mass flows.

Informative Note: The return fan volumetric flow rate in the QAS is calculated from the return air mass flow using the specific volume of air entering the return fan; see Part II of the originating test suite adaptation report[B-6]. The return fan volumetric flow varies with the return air mass flow and the specific volume of the air entering the return fan.

5.5.3.1.2.5 Outdoor Air. The flow of outdoor air shall be introduced at a mass flow rate equal to the sum of the zone exhaust air mass flow rates. For programs that do not precisely apply the specified mass flow balance, introduction of outdoor air to replace the specified exhaust airflow (see Table 5-76), applying the tested program's specific assumptions regarding this calculation, shall be permitted.

Informative Note: Greater amounts of outdoor air may be required in other test cases applying economizer control logic.

5.5.3.1.2.6 Frictionless Ducts, Coils, and Dampers. Airflow through ducts, coils, and dampers shall be frictionless such that there shall be no pressure drops through these components. If the software being tested does not allow frictionless components, the model shall apply the least amount of friction in these components that the software being tested allows.

Informative Note: Modeling of fan heat is as described in Section 5.5.3.1.1.

5.5.3.1.2.7 HVAC System Component Air Leakage and Heat Loss. HVAC system components, including ducts, mixing boxes, dampers, fans, and coils, shall have no air leakage and shall have no heat exchange (gains or losses) with their external surroundings. If the software being tested does not allow zero system air leakage or zero external heat gains or losses for HVAC system components, the model shall apply the least amount of air leakage and external heat exchange that the software being tested allows.

Informative Note: Modeling of exhaust and outdoor airflows is as described previously in Sections 5.5.3.1.2.3 and 5.5.3.1.2.5. Modeling of heating and cooling coils is as described in Section 5.5.3.1.3.

5.5.3.1.3 Operation of Preheating, Cooling, and Reheat Coils. The preheating coil, the cooling coil, and the reheat coils shall be modeled with the following characteristics:

a. All coils maintain set points precisely, without a throttling range. If the program being tested requires an input for throttling range, the minimum value allowed by the program shall be applied and the coil set point adjusted so that supply air is delivered at the specified temperature. Adjustment of the throttling range and coil set points for the purpose of matching the specified coil set point temperature shall be permitted for each test case.
b. All coils have capacity greater than or equal to that needed to meet the coil loads.
c. Preheat-coil set point = 45°F (7.22°C). The preheat coil activates when the temperature of the mixed air (passing through the preheat-coil outlet node of Figure 5-28) is below 45°F (7.22°C). When activated, the preheat coil modulates to maintain the coil leaving-air temperature at 45°F (7.22°C).
d. Cooling-coil set point = 55°F (12.78°C). The cooling coil activates when the temperature of the air leaving the supply fan (passing through the system supply air node of Figure 5-28) is above 55°F (12.78°C). When activated, the cooling coil modulates to maintain the temperature of the air leaving the supply fan at 55°F (12.78°C).
e. Zone reheat coils modulate to meet the zone sensible loads, delivering air at the temperature (above the system supply air temperature) needed to maintain the zone thermostat set point.
f. Cooling-coil bypass factor (BF) = 0. For building energy analysis programs not capable of directly modeling a cooling coil with a bypass factor of zero, a model shall be developed that applies the lowest bypass factor that the software being tested allows. Programs that do not have a bypass factor input shall apply a coil model that maximizes the cooling-coil leaving-air relative humidity when cooling-coil latent load is present. For such programs, to emulate BF = 0 for each steady-state test case, variation of coil parameters among the test cases shall be allowed.

Informative Note: BF = 0 means that when the cooling-coil leaving-air temperature is less than the dew-point temperature of the air entering the cooling coil, the air leaves the coil at 100% relative humidity. If the cooling-coil leaving-air temperature is greater than the entering-air dew-point temperature, no condensation occurs. When cooling-coil latent load is present, the cooling-coil leaving air should be 100% saturated. This

Copyrighted material licensed to Sei Ito on 2020-06-26 for licensee's use only. All rights reserved. No further reproduction or distribution is permitted. Distributed by Techstreet for ASHRAE, www.techstreet.com

Table 5-77 Case AE301 Zone Loads

Input Parameter	SI Units		I-P Units	
	Zone 1, W	Zone 2, W	Zone 1, Btu/h	Zone 2, Btu/h
Zone sensible heating load [a]	2931	2345	10000	8000
Zone latent load [a,b]	586.1	879.2	2000	3000

a. Zone sensible heating load and zone latent load are defined in Section 3.1.
b. Zone latent loads are applied at the respective zone air temperatures specified in Section 5.5.3.1.6.

Table 5-78 Case AE301 Supplementary Internal Gains for Alternate Load Specification

Input Parameter	SI Units		I-P Units	
Supplementary Internal Gains	Zone 1, W	Zone 2, W	Zone 1, Btu/h	Zone 2, Btu/h
Sensible	82.9	735.8	282.8	2510.8
Latent [a]	586.1	879.2	2000.0	3000.0

a. Supplementary latent internal gains are applied at the respective zone air temperatures specified in Section 5.5.3.1.6.

Table 5-79 Case AE301 Zone Air Temperature

Input Parameter	SI Units		I-P Units	
	Zone 1	Zone 2	Zone 1	Zone 2
Zone dry-bulb temperature	21.111°C	22.222°C	70.0°F	72.0°F

Table 5-80 Case AE301 Ambient Conditions

Ambient Condition	SI Units	I-P Units
Dry-bulb temperature	–29.0°C	–20.20°F
Dew-point temperature [a]	–29.0°C	–20.20°F
Solar radiation	None	
Wind speed	4.3 m/s	9.62 mph
Atmospheric pressure [b]	101.325 kPa	14.696 psia
Elevation (sea level) [b]	0 m	0 ft
Equivalent ambient moisture indicators [a]		
Humidity ratio	0.000260	0.000260
Wet-bulb temperature	–29.000°C	–20.200°F
Relative humidity	100.000%	100.000%
Relative humidity (TM2) [c]	100%	100%

a. ***Informative Note:*** Dew-point temperature is exact. The equivalent ambient moisture variables are calculated to the precision shown based on the real-gas model developed by ASHRAE RP-1485[B-21] as implemented in the ASHRAE LibHuAirProp spreadsheet functions [B-22].
b. ***Informative Note:*** The weather data file indicates 0 m altitude, consistent with the given pressure. However, the weather file atmospheric pressure precision is limited to four digits by the weather file format such that 1013 millibars (101300 Pa) is listed in the weather file. The effect of modeling with 101325 versus 101300 Pa is negligible (<0.05% on cooling-coil latent loads) as described in Appendix A of the originating test suite adaptation report[B-6].
c. ***Informative Note:*** The weather data file relative humidity precision is limited to integer percent values by the weather file format and is not as precise as the other equivalent moisture variables. Among the test cases, weather file relative humidities differ from relative humidities specified in various tables of Section 5.5 by <0.22%. The effects of modeling with weather file relative humidities versus specified relative humidities or versus weather file (specified) dew-point temperatures are small (<0.3% on cooling-coil latent loads) as shown in Appendix A of the originating test suite adaptation report [B-6].

is equivalent to having an apparatus dew point equal to the required coil leaving-air temperature (55°F [12.78°C]). To achieve saturation, programs with physical coil models should try to maximize the size of the coil and modulate the coil temperature or flow so that the apparatus dew point is as close as possible to the required leaving-air temperature while still delivering the proper amount of cooling. The QAS assumes that any condensate that forms is cooled from the entering-air dew-point temperature to the coil leaving-air temperature (see Part II, Section 2.2.1.26.1 of the originating test suite adaptation report[B-6]). Other assumptions regarding leaving condensate temperature may be reasonable.

Informative Note: For programs that do not accept a bypass factor input or do not accept BF near 0, modeling with an enlarged hydronic coil, with water temperature reset to meet the required supply air temperature, may be better than modeling with a direct expansion system coil unless the direct expansion coil model is capable of modulating continuously from 0% to 100% output.

5.5.3.1.4 Zone Definition. For programs that are not able to specify zone loads directly and are not able to define an adiabatic zone with negative internal gains, skip the remainder of this section, and model the zones by applying the alternative nonadiabatic zone specified in Section 5.5.3.1.5.

Two unattached zones shall be modeled. Each zone shall conform to the specification in Section 5.5.1.1.4, except that the ideal steady-state zone sensible heating and latent loads, as defined in Section 3.1, shall be modeled as specified in

Copyrighted material licensed to Sei Ito on 2020-06-26 for licensee's use only. All rights reserved. No further reproduction or distribution is permitted. Distributed by Techstreet for ASHRAE, www.techstreet.com

Table 5-77. Zone latent loads are applied at the given zone air temperature.

5.5.3.1.5 Alternate Zone Specifications. If the program being tested was able to model this test case, as specified in Section 5.5.3.1.4, skip this section and proceed to Section 5.5.3.1.6. For programs that require nonadiabatic zones or are not able to model negative internal gains, the alternate zone specification of Section 5.5.1.1.5 for each of the two unattached zones shall be applied, except that the supplementary internal gains of Table 5-78 shall be applied. When implementing this zone definition, zone loads in the model output shall be examined, and input adjustments shall be permitted, such that modeled zone loads (internal gains plus zone envelope heat transfer) match those specified in Section 5.5.3.1.4.

5.5.3.1.6 Zone Temperatures and Thermostat Set Points. The zone temperatures shall be modeled as specified in Table 5-79.

The thermostat specifications of Sections 5.5.1.1.6.1 through 5.5.1.1.6.4 shall apply.

5.5.3.1.7 Ambient Conditions. The ambient conditions specified in Table 5-80 shall be used.

If the tested program does not allow constant steady-state ambient conditions to be input directly, the TMY2-format weather data provided with the following file shall be applied:

AE101.TM2

These data are provided with the accompanying electronic media and are described in Normative Annex A1, Section A1.3.

Informative Note: The instructions for Section 5.5.3.1.7 are the same as those in Section 5.5.1.1.7 (for Case AE101).

Informative Note: Other cases call for different weather files as needed.

Informative Note: Some programs allow constant steady-state ambient conditions to be input directly for design-day calculations.

5.5.3.1.8 Output Requirements. The required outputs for this case shall be as specified in Section 6.5.3.

5.5.3.2 Constant-Volume (CV) Terminal Reheat System Parametric Variations, No Economizer. CV system noneconomizer cases shall be modeled as revisions to the CV system base-case model as follows:

Case	Basis for Case
AE303	AE301
AE304	AE301
AE305	AE301
AE306	AE301

Informative Note: It is recommended to double check the Case AE301 base-case inputs and to diagnose Case AE301 results disagreements before proceeding to the other test cases.

5.5.3.2.1 Case AE303: Low Cooling, Dry-Coil 1

Informative Note, Objective of the Test Case: Test model treatment of a CV terminal reheat system with low sensible cooling load and cool, dry outdoor air.

Informative Note, Method of the Test Case: Use the Case AE301 model with modifications. Dry outdoor air and low sensible and latent loads used in the case ensure sensible-only cooling and isolate that portion of the cooling calculation. Compare coil loads with the QAS and with other appropriate test-case results.

5.5.3.2.1.1 Input Specification. This case shall be identical to Case AE301 (See Section 5.5.3.1) except for changes as follows:

a. **Zone and ambient parameters.** Zone and ambient parameters shall be modeled as specified in Table 5-81; only values that change are shown in the table.
b. **Weather data.** If the tested program does not allow constant steady-state ambient conditions to be input directly, use the TMY2-format weather data provided with the following file:

   AE103.TM2

   These data are provided with the accompanying electronic media and are described in Normative Annex A1, Section A1.3.
c. **Alternate zone definition parameters.** Programs using the alternate zone definition described in Section 5.5.3.1.5 shall apply changes to parameters as indicated in Table 5-82; only values that change are shown in the table. Check output, and adjust modeled internal gains so that, for each zone, total zone sensible cooling load (envelope sensible heat gains plus all sensible internal gains) equals that specified in Table 5-81, and latent cooling load (latent internal gains) equals that specified in Table 5-78 (Case AE301).

   Informative Note: For cooling cases, a near-adiabatic zone is applied, through use of insulation with high thermal resistance, to facilitate precise system loading. Use of a near-adiabatic zone was not possible for the heating cases because some programs may not allow direct input of negative internal gains.

5.5.3.2.2 Case AE304: High Cooling, Wet-Coil 1

Informative Note, Objective of the Test Case: Test model treatment of a CV terminal reheat system with high sensible cooling load and warm, humid outdoor air.

Informative Note, Method of the Test Case: Use the Case AE301 model with modifications. Humid ambient conditions and high sensible cooling load ensure a cold cooling coil with high latent loads. Check cooling-coil leaving-air saturation to verify that the coil bypass factor is zero or near zero. Compare coil loads with the QAS and with other appropriate test-case results.

5.5.3.2.2.1 Input Specification. This case shall be identical to Case AE301 (See Section 5.5.3.1) except for changes as follows:

a. **Zone and ambient parameters.** Zone and ambient parameters shall be modeled as specified in Table 5-83; only values that change are shown in the table.
b. **Weather data.** If the tested program does not allow constant steady-state ambient conditions to be input directly, use the TMY2-format weather data provided with the following file:

Copyrighted material licensed to Sei Ito on 2020-06-26 for licensee's use only. All rights reserved. No further reproduction or distribution is permitted. Distributed by Techstreet for ASHRAE, www.techstreet.com

Table 5-81 Case AE303 Input Parameters

Ambient Input Parameters	SI Units		I-P Units	
Dry-bulb temperature	15.5°C		59.90°F	
Dew-point temperature [a]	–3.0°C		26.60°F	
Equivalent ambient moisture indicators [a]				
Humidity ratio	0.002948		0.002948	
Wet-bulb temperature	7.206°C		44.971°F	
Relative humidity	27.028%		27.028%	
Relative humidity (TM2) [b]	27%		27%	
Zone Input Parameters	**Zone 1**	**Zone 2**	**Zone 1**	**Zone 2**
Zone sensible cooling load [c]	1465 W	2345 W	5000 Btu/h	8000 Btu/h
Zone dry-bulb temperature [d]	23.333°C	24.444°C	74°F	76°F

a. ***Informative Note:*** Dew-point temperature is exact. The equivalent ambient moisture variables are calculated to the precision shown based on the real-gas model developed by ASHRAE RP-1485[B-21] as implemented in the ASHRAE LibHuAirProp spreadsheet functions [B-22].

b. ***Informative Note:*** The weather data file relative humidity precision is limited to integer percent values by the weather file format and is not as precise as the other equivalent moisture variables. Among the test cases, weather file relative humidities differ from relative humidities specified in various tables of Section 5.5 by <0.22%. The effects of modeling with weather file relative humidities versus specified relative humidities or versus weather file (specified) dew-point temperatures are small (<0.3% on cooling-coil latent loads) as shown in Appendix A of the originating test suite adaptation report [B-6].

c. *Zone sensible cooling load* is defined in Section 3.1.

d. *Zone latent loads*, as defined in Section 3.1, are applied at the given zone air temperature.

Table 5-82 Case AE303 Alternate Zone Definition Input Parameters

Input Parameter	SI Units		I-P Units	
Insulation resistance	100.0 (m^2·K)/W		567.8 (h·ft^2·°F)/Btu	
Supplementary internal gains—sensible	**Zone 1**	**Zone 2**	**Zone 1**	**Zone 2**
	1478.8 W	2359.9 W	5045.8 Btu/h	8052.3 Btu/h

AE104.TM2

These data are provided with the accompanying electronic media and are described in Normative Annex A1, Section A1.3.

c. **Alternate zone definition parameters.** Programs using the alternate zone definition described in Section 5.5.3.1.5 shall apply changes to parameters as indicated in Table 5-84; only values that change are shown in the table. Check output, and adjust modeled internal gains so that, for each zone, total zone sensible cooling load (envelope sensible heat gains plus all sensible internal gains) equals that specified in Table 5-83, and latent cooling load (latent internal gains) equals that specified in Table 5-78 (Case AE301).

5.5.3.2.3 Case AE305: Low Cooling, Dry-Coil 1

Informative Note, Objective of the Test Case: Generate results for a CV terminal reheat system without enthalpy economizer, applying low sensible cooling load and warm, dry outdoor air to compare with results for the same system with enthalpy economizer (Case AE345).

Informative Note, Method of the Test Case: Use the Case AE301 model with modifications. Case AE305 applies ambient conditions with low wet-bulb temperature to ensure that the economizer operates when it is specified in Case AE345. Compare coil loads with the QAS and with results for Case AE345 (which includes an enthalpy economizer system).

5.5.3.2.3.1 Input Specification. This case shall be identical to Case AE301 (see Section 5.5.3.1) except for changes as follows:

a. **Zone and ambient parameters.** Zone and ambient parameters shall be modeled as specified in Table 5-85; only values that change are shown in the table.

b. **Weather data.** If the tested program does not allow constant steady-state ambient conditions to be input directly, use the TMY2-format weather data provided with the following file:

AE105.TM2

These data are provided with the accompanying electronic media and are described in Normative Annex A1, Section A1.3.

c. **Alternate zone definition parameters.** Programs using the alternate zone definition described in Section 5.5.3.1.5 shall apply changes to parameters as indicated in Table 5-86; only values that change are shown in the table. Check output, and adjust modeled internal gains so that, for each zone, total zone sensible cooling load (envelope sensible heat gains plus all sensible internal gains) equals that specified in Table 5-85, and latent cooling load (latent internal gains) equals that specified in Table 5-78 (Case AE301).

5.5.3.2.4 Case AE306: Low Cooling, Wet-Coil 1

Informative Note, Objective of the Test Case: Generate results for a CV terminal reheat system without dry-bulb economizer, applying low sensible cooling load at warm,

Copyrighted material licensed to Sei Ito on 2020-06-26 for licensee's use only. All rights reserved. No further reproduction or distribution is permitted. Distributed by Techstreet for ASHRAE, www.techstreet.com

Table 5-83 Case AE304 Input Parameters

Ambient Input Parameters	SI Units		I-P Units	
Dry-bulb temperature	26.9°C		80.42°F	
Dew-point temperature [a]	22.1°C		71.78°F	
Equivalent ambient moisture indicators [a]				
Humidity ratio	0.016849		0.016849	
Wet-bulb temperature	23.441°C		74.194°F	
Relative humidity	75.023%		75.023%	
Relative humidity (TM2) [b]	75%		75%	
Zone Input Parameters	**Zone 1**	**Zone 2**	**Zone 1**	**Zone 2**
Zone sensible cooling load [c]	2931 W	3517 W	10000 Btu/h	12000 Btu/h
Zone dry-bulb temperature [d]	23.889°C	25.000°C	75°F	77°F

a. ***Informative Note:*** Dew-point temperature is exact. The equivalent ambient moisture variables are calculated to the precision shown based on the real-gas model developed by ASHRAE RP-1485[B-21] as implemented in the ASHRAE LibHuAirProp spreadsheet functions[B-22].

b. ***Informative Note:*** The weather data file relative humidity precision is limited to integer percent values by the weather file format and is not as precise as the other equivalent moisture variables. Among the test cases, weather file relative humidities differ from relative humidities specified in various tables of Section 5.5 by <0.22%. The effects of modeling with weather file relative humidities versus specified relative humidities or versus weather file (specified) dew-point temperatures are small (<0.3% on cooling-coil latent loads) as shown in Appendix A of the originating test suite adaptation report [B-6].

c. *Zone sensible cooling load* is defined in Section 3.1.

d. *Zone latent loads*, as defined in Section 3.1, are applied at the given zone air temperature.

Table 5-84 Case AE304 Alternate Zone Definition Input Parameters

Input Parameter	SI Units		I-P Units	
Insulation resistance	100.0 (m^2·K)/W		567.8 (h·ft^2·°F)/Btu	
Supplementary internal gains—sensible	**Zone 1**	**Zone 2**	**Zone 1**	**Zone 2**
	2925.6 W	3513.6 W	9982.4 Btu/h	11988.9 Btu/h

humid outdoor air conditions to compare with results for the same system with dry-bulb economizer (Case AE326).

Informative Note, Method of the Test Case: Use the Case AE301 model with modifications. Case AE306 applies an ambient dry-bulb temperature that ensures the economizer operates when it is specified in Case AE326. Humid ambient conditions and high sensible cooling load ensure a cold cooling coil with high latent loads. Check the cooling-coil leaving-air saturation to verify that the coil bypass factor is zero or near zero. Compare coil loads with the QAS and with results for Case AE326 (which includes a comparative dry-bulb economizer system).

5.5.3.2.4.1 Input Specification. This case shall be identical to Case AE301 (see Section 5.5.3.1) except for changes as follows:

a. **Zone and ambient parameters**. Zone and ambient parameters shall be modeled as specified in Table 5-87; only values that change are shown in the table.

b. **Weather data.** If the tested program does not allow constant steady-state ambient conditions to be input directly, use the TMY2-format weather data provided with the following file:

AE106.TM2

These data are provided with the accompanying electronic media and are described in Normative Annex A1, Section A1.3.

c. **Alternate zone definition parameters.** Programs using the alternate zone definition described in Section 5.5.3.1.5 shall apply changes to parameters as indicated in Table 5-88; only values that change are shown in the table. Check output, and adjust modeled internal gains so that, for each zone, total zone sensible cooling load (envelope sensible heat gains plus all sensible internal gains) equals that specified in Table 5-87, and latent cooling load (latent internal gains) equals that specified in Table 5-78 (Case AE301).

5.5.3.3 Constant-Volume Terminal Reheat System Parametric Variations, with Economizer. Base cases for the CV system economizer cases shall be as follows:

Case	Basis for Case
AE326	AE306
AE345	AE305

5.5.3.3.1 Case AE326: Low Cooling, Wet-Coil 1 with Return-Air Comparative Dry-Bulb Economizer Outdoor Air Control. This test case shall be modeled with identical

Copyrighted material licensed to Sei Ito on 2020-06-26 for licensee's use only. All rights reserved. No further reproduction or distribution is permitted. Distributed by Techstreet for ASHRAE, www.techstreet.com

Table 5-85 Case AE305 Input Parameters

Ambient Input Parameters	SI Units		I-P Units	
Dry-bulb temperature	24.9°C		76.82°F	
Dew-point temperature [a]	2.4°C		36.32°F	
Equivalent ambient moisture indicators[a]				
Humidity ratio	0.004510		0.004510	
Wet-bulb temperature	13.027°C		55.449°F	
Relative humidity	23.050%		23.050%	
Relative humidity (TM2) [b]	23%		23%	
Zone Input Parameters	**Zone 1**	**Zone 2**	**Zone 1**	**Zone 2**
Zone sensible cooling load [c]	1465 W	2345 W	5000 Btu/h	8000 Btu/h
Zone dry-bulb temperature [d]	23.333°C	24.444°C	74°F	76°F

a. ***Informative Note:*** Dew-point temperature is exact. The equivalent ambient moisture variables are calculated to the precision shown based on the real-gas model developed by ASHRAE RP-1485[B-21] as implemented in the ASHRAE LibHuAirProp spreadsheet functions [B-22].

b. ***Informative Note:*** The weather data file relative humidity precision is limited to integer percent values by the weather file format and is not as precise as the other equivalent moisture variables. Among the test cases, weather file relative humidities differ from relative humidities specified in various tables of Section 5.5 by <0.22%. The effects of modeling with weather file relative humidities versus specified relative humidities or versus weather file (specified) dew-point temperatures are small (<0.3% on cooling-coil latent loads) as shown in Appendix A of the originating test suite adaptation report [B-6].

c. *Zone sensible cooling load* is defined in Section 3.1.

d. *Zone latent loads*, as defined in Section 3.1, are applied at the given zone air temperature.

Table 5-86 Case AE305 Alternate Zone Definition Input Parameters

Input Parameter	SI Units		I-P Units	
Insulation resistance	100.0 (m^2·K)/W		567.8 (h·ft^2·°F)/Btu	
Supplementary internal gains—sensible	**Zone 1**	**Zone 2**	**Zone 1**	**Zone 2**
	1462.7 W	2343.8 W	4990.8 Btu/h	7997.3 Btu/h

zone and system inputs as Case AE306 except for the existence of a return-air comparative dry-bulb temperature economizer as described below.

Informative Note, Objective of the Test Case: Test model treatment of CV terminal reheat air system with return-air comparative dry-bulb temperature economizer at low sensible cooling load and warm, humid outdoor air conditions.

Informative Note, Method of the Test Case: Use the Case AE306 model, as defined in Section 5.5.3.2.4, and add the economizer as described here. Compare coil loads with the QAS and with results for Case AE306.

Informative Note: For the given economizer control logic at the given steady-state operating conditions, some cooling loads are increased by varying amounts.

5.5.3.3.1.1 Input Specification. Case AE326 shall be identical to Case AE306 (see Section 5.5.3.2.4) except for the addition of a return-air comparative dry-bulb temperature economizer outdoor air control as specified in Section 5.5.3.3.1.1.1.

5.5.3.3.1.1.1 Return-Air Comparative Dry-Bulb Economizer Outdoor Air Control. When the economizer is ON, the outdoor air shall increase until either the cooling-coil sensible load is eliminated or the outdoor air is 100% of the supply airflow; if the economizer control is not able to satisfy the cooling-coil sensible load, the cooling coil shall operate, along with the economizer, to meet the remaining cooling-coil sensible load. The air system dampers (see Figure 5-28) shall be adjusted using economizer control based on outdoor and return air dry-bulb temperature as specified below.

- Economizer = OFF IF ODB > RAT OR ODB ≤ $ODB_{econo,min}$. In this configuration, the outdoor air mass flow rate shall equal the combined zone exhaust air mass flows.
  - Coil = ON IF SAT > 55°F (12.78°C); see Section 5.5.3.1.3(d).
- Economizer = ON IF RAT ≥ ODB > $ODB_{econo,min}$.
  - Coil = ON IF SAT > 55°F (12.78°C); see Section 5.5.3.1.3(d). In this configuration, the mixed air shall be 100% outdoor air. ***Informative Note:*** For the test cases, this condition occurs when RAT ≥ ODB > SFEAT, where SFEAT is the supply fan entering-air temperature required to meet the system supply fan leaving-air temperature set point.
  - Coil = OFF IF SAT ≤ 55°F (12.78°C); see Section 5.5.3.1.3(d). In this configuration, the air system dampers shall modulate the flow of outdoor air to meet the SAT set point, and the outdoor airflow shall be permitted to vary from 100% outdoor air to the minimum

Copyrighted material licensed to Sei Ito on 2020-06-26 for licensee's use only. All rights reserved. No further reproduction or distribution is permitted. Distributed by Techstreet for ASHRAE, www.techstreet.com

Table 5-87 Case AE306 Input Parameters

Ambient Input Parameters	SI Units		I-P Units	
Dry-bulb temperature	23.0°C		73.40°F	
Dew-point temperature [a]	20.9°C		69.62°F	
Equivalent ambient moisture indicators[a]				
Humidity ratio	0.015625		0.015625	
Wet-bulb temperature	21.523°C		70.741°F	
Relative humidity	87.968%		87.968%	
Relative humidity (TM2) [b]	88%		88%	
Zone Input Parameters	**Zone 1**	**Zone 2**	**Zone 1**	**Zone 2**
Zone sensible cooling load [c]	1465 W	2345 W	5000 Btu/h	8000 Btu/h
Zone dry-bulb temperature [d]	23.333°C	24.444°C	74°F	76°F

a. ***Informative Note:*** Dew-point temperature is exact. The equivalent ambient moisture variables are calculated to the precision shown based on the real-gas model developed by ASHRAE RP-1485[B-21] as implemented in the ASHRAE LibHuAirProp spreadsheet functions [B-22].

b. ***Informative Note:*** The weather data file relative humidity precision is limited to integer percent values by the weather file format and is not as precise as the other equivalent moisture variables. Among the test cases, weather file relative humidities differ from relative humidities specified in various tables of Section 5.5 by <0.22%. The effects of modeling with weather file relative humidities versus specified relative humidities or versus weather file (specified) dew-point temperatures are small (<0.3% on cooling-coil latent loads) as shown in Appendix A of the originating test suite adaptation report [B-6].

c. *Zone sensible cooling load* is defined in Section 3.1.

d. *Zone latent loads*, as defined in Section 3.1, are applied at the given zone air temperature.

Table 5-88 Case AE306 Alternate Zone Definition Input Parameters

Input Parameter	SI Units		I-P Units	
Insulation resistance	100.0 (m^2·K)/W		567.8 (h·ft^2·°F)/Btu	
Supplementary internal gains—sensible	**Zone 1**	**Zone 2**	**Zone 1**	**Zone 2**
	1465.4 W	2347.0 W	5000.0 Btu/h	8008.4 Btu/h

flow necessary to replace the combined zone exhaust air mass flows. ***Informative Note:*** For the test cases, this condition occurs when ODB ≤ SFEAT.

where for

- Economizer = ON, outdoor air shall be provided as needed up to 100% outdoor air but not less than the minimum required outdoor airflow rate at any time.
- Economizer = OFF, outdoor air shall be provided at the minimum required outdoor airflow rate.
- Coil = ON, the cooling coil shall operate only as necessary to satisfy the cooling-coil sensible load not compensated by the economizer.
- Coil = OFF, the cooling coil shall not operate.

and where

- ODB is the outdoor air dry-bulb temperature.
- $ODB_{econo,min}$ is the outdoor dry-bulb temperature where, at the minimum required outdoor airflow rate, mixed air temperature (temperature of air passing through the mixed air node in Figure 5-28) equals the SAT set point minus the supply fan temperature rise.
- RAT is the return air dry-bulb temperature at the return fan outlet.
- SAT is the supply air dry-bulb temperature at the supply air node (*sa*); see Figure 5-28. As used above, it is the supply air temperature if the coil did not operate.

Informative Note: Because the cooling coil activates (cooling-coil load occurs) when supply fan leaving-air temperature rises above 55°F, an equivalent economizer control scheme is as follows:

- Economizer = OFF AND Coil = ON IF cooling-coil sensible load > 0 AND ODB > RAT. In this configuration, the outdoor airflow rate equals the combined zone exhaust airflows.
- Economizer = ON AND Coil = ON IF cooling-coil sensible load > 0 AND ODB ≤ RAT AND all cooling-coil sensible load is NOT compensated by the economizer. (In this configuration, mixed air is 100% outdoor air.)
- Economizer = ON AND Coil = OFF IF cooling-coil sensible load > 0 AND ODB ≤ RAT AND all cooling-coil sensible load is compensated by the economizer. (In this configuration, the air system dampers modulate so that outdoor airflow is between 100% outdoor air and the minimum flow necessary to replace the combined zone exhaust airflows.)
- Economizer = OFF AND Coil = OFF IF cooling-coil sensible load = 0.

Copyrighted material licensed to Sei Ito on 2020-06-26 for licensee's use only. All rights reserved. No further reproduction or distribution is permitted. Distributed by Techstreet for ASHRAE, www.techstreet.com

5.5.3.3.2 Case AE345: Low Cooling, Dry-Coil 1 with Return-Air Comparative Enthalpy Economizer Outdoor Air Control. This test case shall be modeled with identical zone and system inputs as Case AE305 except for the existence of a return-air comparative enthalpy economizer as described below.

Informative Note, Objective of the Test Case: Test model treatment of a CV terminal reheat system with return-air comparative enthalpy economizer at low sensible cooling load and warm, dry outdoor air conditions.

Informative Note, Method of the Test Case: Use the Case AE305 model as defined in Section 5.5.3.2.3, and add the economizer as described here. Compare coil loads with the QAS and with results for Case AE305.

Informative Note: For the given economizer control logic, at the given steady-state operating conditions, some cooling loads are increased by varying amounts.

5.5.3.3.2.1 Input Specification. Case AE345 shall be identical to Case AE305 (see Section 5.5.3.2.3) except for the addition of a return-air comparative enthalpy economizer outdoor air control as specified in Section 5.5.3.3.2.1.1.

5.5.3.3.2.1.1 Return-Air Comparative Enthalpy Economizer Outdoor Air Control. When the economizer is ON, the outdoor air shall increase until either the cooling-coil sensible load is eliminated or the outdoor air is 100% of the supply airflow; if the economizer control is not able to satisfy the cooling-coil sensible load, the cooling coil shall operate, along with the economizer, to meet the remaining cooling-coil sensible load. The air system dampers (see Figure 5-28) shall be adjusted using economizer control based on outdoor and return air enthalpy as specified below.

- Economizer = OFF IF OAE > RAE OR ODB ≤ $ODB_{econo,min}$. In this configuration, the outdoor air mass flow rate shall equal the combined zone exhaust air mass flows.
  - Coil = ON IF SAT > 55°F (12.78°C); see Section 5.5.3.1.3(d).
- Economizer = ON IF OAE ≤ RAE AND ODB > $ODB_{econo,min}$.
  - Coil = ON IF SAT > 55°F (12.78°C); see Section 5.5.3.1.3(d). In this configuration, the mixed air shall be 100% outdoor air. ***Informative Note:*** For the test cases, this condition occurs when coincident ODB > SFEAT, where SFEAT is the supply fan entering-air temperature required to meet the system supply fan leaving-air temperature set point.
  - Coil = OFF IF SAT ≤ 55°F (12.78°C); see Section 5.5.3.1.3(d). In this configuration, the air system dampers shall modulate the flow of outdoor air to meet the SAT set point, and the outdoor airflow shall be permitted to vary from 100% outdoor air to the minimum flow necessary to replace the combined zone exhaust air mass flows. ***Informative Note:*** For the test cases, this condition occurs when coincident ODB ≤ SFEAT.

where for

- Economizer = ON, outdoor air shall be provided as needed up to 100% outdoor air but not less than the minimum required outdoor airflow rate at any time.
- Economizer = OFF, outdoor air shall be provided at the minimum required outdoor airflow rate.
- Coil = ON, the cooling coil shall operate only as necessary to satisfy the cooling-coil sensible load not compensated by the economizer.
- Coil = OFF, the cooling coil shall not operate.

and where

- OAE is the outdoor air enthalpy.
- $ODB_{econo,min}$ is the outdoor dry-bulb temperature where, at the minimum required outdoor airflow rate, mixed air temperature (temperature of air passing through the mixed air node in Figure 5-28) equals SAT set point minus supply fan temperature rise.
- RAE is the return air enthalpy at the return fan outlet.
- SAT is the supply air dry-bulb temperature at the supply air node (*sa*); see Figure 5-28. As used above, it is the supply air temperature if the coil did not operate.

Informative Note: Because the cooling coil activates (cooling-coil load occurs) when supply fan leaving-air temperature rises above 55°F, an equivalent economizer control scheme is as follows:

- Economizer = OFF AND Coil = ON IF cooling-coil sensible load > 0 AND OAE > RAE.
- Economizer = ON AND Coil = ON IF cooling-coil sensible load > 0 AND OAE ≤ RAE AND all cooling-coil sensible load is NOT compensated by the economizer. (In this configuration, mixed air is 100% outdoor air.)
- Economizer = ON AND Coil = OFF IF cooling-coil sensible load > 0 AND OAE ≤ RAE AND all cooling-coil sensible load is compensated by the economizer. (In this configuration, the air system dampers modulate so that outdoor air is between 100% outdoor air and the minimum flow necessary to replace the combined zone exhaust airflows.)
- Economizer = OFF AND Coil = OFF IF cooling-coil sensible load = 0.

5.5.4 Variable-Air-Volume Terminal Reheat (VAV) System Cases (AE400 Series). The ability to model a variable-air-volume (VAV) air system with zone reheat serving multiple zones shall be tested as described in this section.

Informative Note: If the software being tested is capable of applying a variety of system models to address a VAV system, the system model that is most similar to the system specified for Case AE401 below should be applied, and the selected system model should be capable of economizer function; the same selected system should be applied for all of the VAV system test cases. The user may test other possible modeling approaches (available system models) in this context as appropriate to the software being tested.

Copyrighted material licensed to Sei Ito on 2020-06-26 for licensee's use only. All rights reserved. No further reproduction or distribution is permitted. Distributed by Techstreet for ASHRAE, www.techstreet.com

Informative Note: The progression of these test cases follows the AE300 series (CV system) tests. The VAV system serves two zones.

5.5.4.1 Case AE401: Base Case, High-Heating 1. Case AE401 shall be modeled as specified in this section and its subsections. The system configuration shall be modeled as presented in the schematic diagram of Figure 5-29. System input parameters shall be as described in the following sections.

Informative Note: The test specifications for the heating, cooling, and reheat coils; zone definition; alternate zone specifications; zone temperature and thermostat set points; and ambient conditions (Sections 5.5.4.1.4 through 5.5.4.1.8) are the same as those for the CV system (Sections 5.5.3.1.3 through 5.5.3.1.7).

Informative Note, Objective of the Test Case: Test model treatment of a VAV terminal reheat air system with high sensible heating load and cold outdoor air.

Informative Note, Method of the Test Case: A VAV air system conditions two zones that have constant sensible and latent internal loads. The system consists of variable-speed supply and return fans, preheat and cooling coils, and zone VAV terminals with reheat coils. The cooling coil provides cooling as needed to maintain the supply air temperature set point, and the reheat coils provide heating to maintain each zone temperature at its set point. The preheat coils operate as needed to prevent supply air temperature from going too far below the supply air temperature set point. Zone VAV terminals modulate to provide only the necessary airflow needed to maintain the zone temperature set point but not below the zone exhaust airflow rate. The model is run at specified constant outdoor and indoor conditions. Resulting coil loads are compared with the QAS and with other example results (see Informative Annex B16, Section B16.7). The QAS is provided with the accompanying electronic media and is further discussed in Informative Annex B17, Section B17.3.

Informative Note: In this base case, no economizer function is modeled; economizer function is tested in later cases.

5.5.4.1.1 Fan Operation. The system shall have a supply fan, return fan, and individual zone exhaust fans.

5.5.4.1.1.1 Supply Fan. The supply fan characteristics shall be as follows:

a. The fan is located downstream of the heating and cooling coils as specified in Figure 5-29.
b. The supply fan total pressure rise = 2.0 in. of water (498 Pa) at 1300 cfm (613.53 L/s).
c. The supply fan total pressure rise varies as

$$\text{Pressure rise (in. of water)} = (2.0 \text{ in. of water}) \times [(\text{Actual supply fan cfm})/(1300 \text{ cfm})]^2$$

d. The fan modulates to provide the airflow established by the zone VAV terminals as specified in Section 5.5.4.1.3.
e. The fan operates continuously.
f. Fan energy is transferred to the air that is being moved.
g. Fan motor and transmission drive energy loss is not transferred to the moving air.
h. (Fan heat to airstream) = H_o × [1/(Fan mechanical efficiency) – 1], where
   - H_o is the fan output power required to meet the specified airflow requirements; see H_o under *fan mechanical efficiency* in Section 3.1.
   - Fan mechanical efficiency = 0.7, constant value; *fan mechanical efficiency* is defined in Section 3.1.
i. (Fan motor input power) = H_o/[(Fan mechanical efficiency) × (Transmission drive efficiency) × (Motor efficiency)], where
   - 0 ≤ (Transmission drive efficiency) ≤ 1; *transmission drive efficiency* is defined in Section 3.1.
   - 0 ≤ (Motor efficiency) ≤ 1; *motor efficiency* is defined in Section 3.1.

If the program being tested is not able to model the transmission drive and motor losses as occurring outside the airstream, the fan, transmission drive, and motor efficiency losses shall be specified to have a combined efficiency of 0.7 and to occur in the airstream.

Informative Note: The airstream heat gain (fan heat) affects the test-case outputs, while the motor and transmission drive input energy do not; therefore, the transmission and motor efficiency may be any value as long as their heat is not imparted to the airstream and the fan mechanical efficiency = 0.7.

5.5.4.1.1.2 Return Fan. The return fan characteristics shall be as follows:

a. The fan is located downstream of the zone return air mixer and before the return air splitter, as specified in Figure 5-29.
b. The return fan total pressure rise = 1.0 in. of water (249 Pa) at 800 cfm (377.56 L/s).
c. The return fan total pressure rise varies as

$$\text{Pressure rise (in. of water)} = (1.0 \text{ in. of water}) \times [(\text{Actual return fan cfm})/(800 \text{ cfm})]^2$$

d. The fan modulates to return an air volume as specified in Section 5.5.4.1.2.4.
e. The fan operates continuously.
f. Fan energy is transferred to the air that is being moved.
g. Fan motor and transmission drive energy loss is not transferred to the moving air.
h. (Fan heat to airstream) = H_o × [1/(Fan mechanical efficiency) – 1], where
   - H_o is the fan output power required to meet the specified airflow requirements; see H_o under *fan mechanical efficiency* in Section 3.1.
   - Fan mechanical efficiency = 0.7, constant value; *fan mechanical efficiency* is defined in Section 3.1.
i. (Fan motor input power) = H_o/[(Fan mechanical efficiency) × (Transmission drive efficiency) × (Motor efficiency)], where
   - 0 ≤ (Transmission drive efficiency) ≤ 1; *transmission drive efficiency* is defined in Section 3.1.
   - 0 ≤ (Motor efficiency) ≤ 1; *motor efficiency* is defined in Section 3.1.

If the program being tested is not able to model the transmission drive and motor losses as occurring outside

Copyrighted material licensed to Sei Ito on 2020-06-26 for licensee's use only. All rights reserved. No further reproduction or distribution is permitted. Distributed by Techstreet for ASHRAE, www.techstreet.com

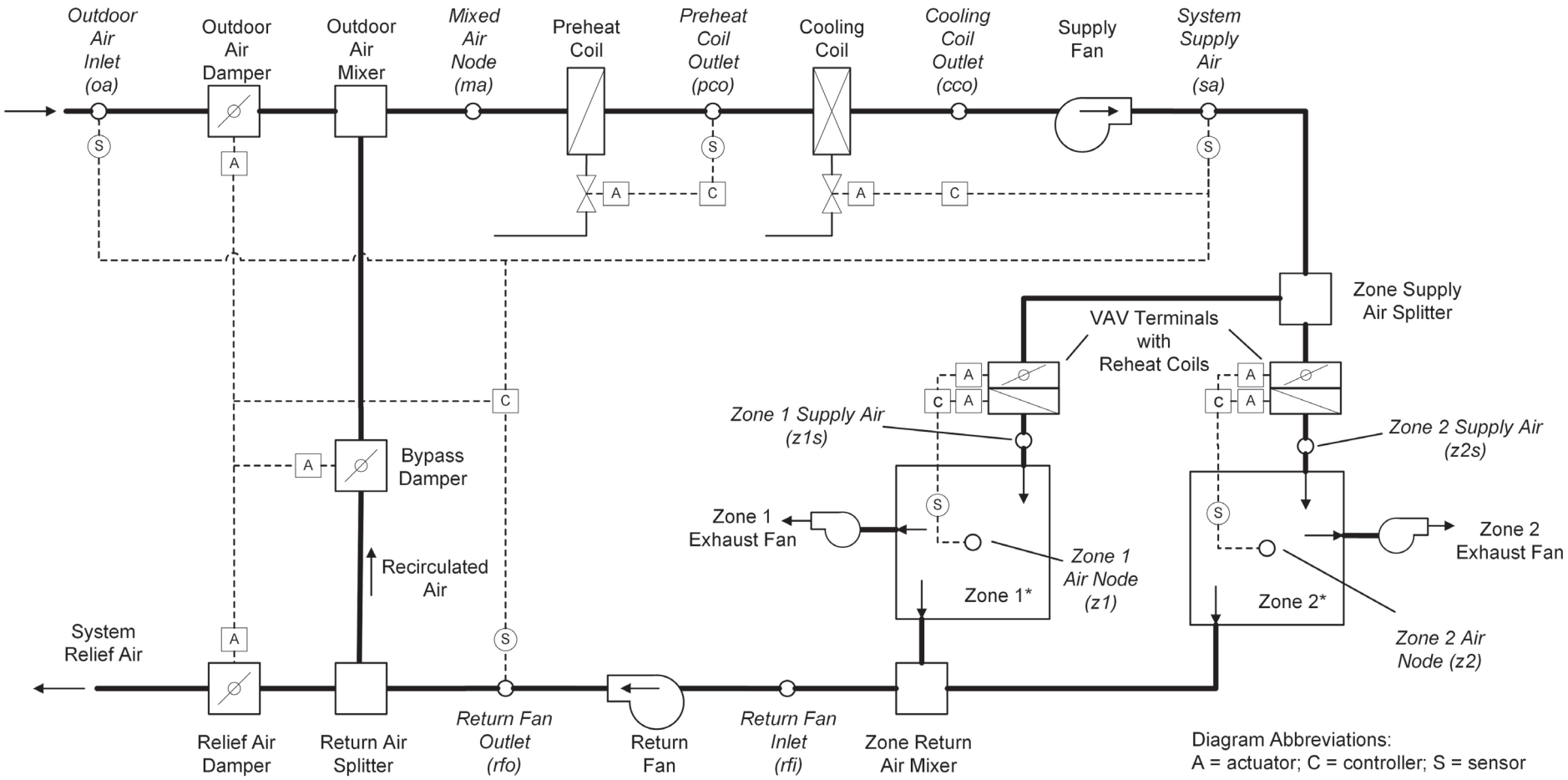

* Sensible and latent zone loads are specified for the base case in Section 5.5.4.1.5 and vary among the test cases. The zone thermostats sense only the zone air indoor dry-bulb temperature at their respective zone air nodes.

Figure 5-29 Variable-air-volume terminal reheat (VAV) system schematic.

Informative Note: *Valves indicated are for a typical hydronic system and are not explicitly required by the test specification. Coils can be of any type as long as they meet the operational requirements of the test specification.*

Copyrighted material licensed to Sei Ito on 2020-06-26 for licensee's use only.
All rights reserved. No further reproduction or distribution is permitted. Distributed by Techstreet for ASHRAE, www.techstreet.com

Table 5-89 Case AE401 System Airflow Rates

System Airflows	SI Units		I-P Units	
Design system supply airflow rate	613.53 L/s [a]		1300 cfm [a]	
Design system return airflow rate	377.56 L/s [b]		800 cfm [b]	
Zone Airflows	**Zone 1**	**Zone 2**	**Zone 1**	**Zone 2**
Design nominal zone supply airflow rate	283.17 L/s [c]	330.36 L/s [c]	600 cfm [c]	700 cfm [c]
Design zone minimum airflow rate	94.39 L/s [d]	141.58 L/s [d]	200 cfm [d]	300 cfm [d]
Design zone minimum airflow fraction (% of design nominal zone supply air)	33% [d,e]	43% [d,f]	33% [d,e]	43% [d,f]
Zone exhaust airflow rate	94.39 L/s [g]	141.58 L/s [g]	200 cfm [g]	300 cfm [g]

a This is the volumetric airflow rate on which the supply fan pressure rise (2 in. of water at 1300 cfm) is based; see Section 5.5.4.1.1.1(b) and (c). The actual system supply airflow rate shall be permitted to vary from the design system supply airflow rate and is defined in Section 5.5.4.1.2.1.

b. This is the volumetric return airflow rate calculated from the *design system supply airflow* rate minus the total *zone exhaust airflow* rates. It is the volumetric airflow rate on which the return fan pressure rise (1 in. of water at 800 cfm) is based; see Section 5.5.4.1.1.2(b) and (c). The actual return airflow rate shall be permitted to vary from the design airflow rate and is defined in Section 5.5.4.1.2.4.

c. The *design nominal zone supply airflow rate* is the maximum volume of air entering the zone at the outlet of the VAV terminal, using air conditions at the supply fan inlet. Any design zone supply airflow rate shall be permitted as long as zone sensible loads are satisfied. Actual zone supply volumetric airflow rates shall be permitted to vary according to zone VAV terminal requirements (see Section 5.5.4.1.3). ***Informative Note:*** At design conditions, the actual zone supply air volumetric flow varies as supply fan heat increases the specific volume of the air away from the supply fan inlet. Use of the values in this table ensures adequate capacity for the specified test cases.

d. ***Informative Note:*** Design zone minimum airflow rate and minimum airflow fraction are approximate equivalent inputs provided for those programs that may need them. The actual zone minimum airflow rate equals the zone exhaust air mass flow rate. Programs that require volumetric inputs for the zone minimum airflow and do not calculate volumetric airflows based on system-specific local conditions (e.g., zone exhaust at zone air conditions, supply air at supply fan entering-air conditions) may use the listed values. Because zone conditions and supply fan entering-air temperature vary among the test cases, the actual minimum zone air mass flow rates and volumetric flow rates, as calculated by the QAS, also vary among the test cases.

e. ***Informative Note:*** Zone (VAV terminal) minimum airflow fraction; listed approximate value is calculated from 200 cfm/600 cfm. A more precise value can be obtained from the ratio of the mass flows.

f. ***Informative Note:*** Zone (VAV terminal) minimum airflow fraction; listed approximate value is calculated from 300 cfm/700 cfm. A more precise value can be obtained from the ratio of the mass flows.

g. Volumetric airflow rate at exhaust fan inlet conditions; see Section 5.5.4.1.2.3.

the airstream, the fan, transmission drive, and motor efficiency losses shall be specified to have a combined efficiency of 0.7 and to occur in the airstream.

Informative Note: The airstream heat gain (fan heat) affects the test-case outputs, while the motor and transmission drive input energy do not; therefore, the transmission and motor efficiency may be any value as long as their heat is not imparted to the airstream and the fan mechanical efficiency = 0.7.

5.5.4.1.1.3 Exhaust Fan. The zone exhaust fan shall maintain airflow as specified in Section 5.5.4.1.2.

Informative Note: Exhaust fan details are not defined explicitly, as the exhaust fan's characteristics have no impact on the results of the test case.

5.5.4.1.1.4 Programs with Predetermined Fan Modeling Assumptions. Programs with predetermined assumptions shall be permitted to apply those assumptions.

Informative Note: For example, a program may model the listed system supply airflow rate (see Section 5.5.4.1.2) using its default entering-air conditions if they are not normally adjustable by a typical program user.

5.5.4.1.2 Airflows. System and zone airflows shall be as shown in Table 5-89 and the following subsections.

Informative Note: The design system supply and return airflow rates and design zone supply airflow rates are the same as the designated CV system airflow rates of Case AE301. For the VAV system cases, the actual system supply and return airflow rates and the zone supply airflow rates vary in response to the operation of VAV terminals.

5.5.4.1.2.1 System Supply Air. The system supply airflow rate shall deliver the airflow required to satisfy the combined VAV terminal airflow requirements of Zones 1 and 2; see Section 5.5.4.1.3 for VAV terminal operation requirements.

Informative Note: The system supply mass flow rate is equal to the combined mass flow rate of the zone air supplies.

Informative Note: As the temperature and humidity ratio of the air entering the supply fan change, the specific volume of that air changes.

Informative Note: The QAS calculates the system mass flow rate from the volumetric flow using the local specific volume of air entering the supply fan. Results differences versus the QAS can be caused by differences in the method and assumptions a tested program uses to convert volumetric flow to mass flow. Example results for the QAS, including detailed outputs (e.g., mass flow rate, specific volume, enthalpy) at specific system locations, are provided in Informative Annex B16, Section B16.7; assumptions of the QAS for converting volumetric flows to mass flows are provided in Part II of the originating test suite adaptation report [B-6].

5.5.4.1.2.2 Zone Supply Air. The zone supply airflow rates shall be those required to meet the VAV terminal airflow requirements, see Section 5.5.4.1.3(b), (c), (d), and (f).

5.5.4.1.2.3 Zone Exhaust Air. The zone exhaust airflow rates shall be volumetrically constant and are measured at the exhaust fan inlet conditions.

Informative Note: The QAS calculates the exhaust air mass flow rate from the volumetric flow using the local specific volume of the air entering the exhaust fan (i.e., the zone

Copyrighted material licensed to Sei Ito on 2020-06-26 for licensee's use only. All rights reserved. No further reproduction or distribution is permitted. Distributed by Techstreet for ASHRAE, www.techstreet.com

air properties); see Part II of the originating test suite adaptation report[B-6].

Informative Note: As the temperature and humidity ratio of the air entering the exhaust fan change, the specific volume of that air changes. This means that the mass flow rate of exhaust air, while constant for a given steady-state test case, varies among the test cases based on zone conditions.

5.5.4.1.2.4 Return Air. The system return airflow rate shall be the air volume, as measured at the return fan inlet, necessary to move an air mass equal to the zone supply mass flows minus the zone exhaust mass flows.

Informative Note: When the VAV terminals are at minimum position, defined as that needed to offset zone exhaust (Section 5.5.4.1.3[c]), there is zero return airflow.

Informative Note: The return fan volumetric flow rate in the QAS is calculated from the return air mass flow using the specific volume of air entering the return fan; see Part II of the originating test suite adaptation report [B-6]. The return fan volumetric flow varies with the return air mass flow and the specific volume of the air entering the return fan.

5.5.4.1.2.5 Outdoor Air. The flow of outdoor air shall be introduced at a mass flow rate equal to the sum of the zone exhaust air mass flow rates. For programs that do not precisely apply the specified mass flow balance, introduction of outdoor air to replace the specified exhaust airflow (see Table 5-89), applying the tested program's specific assumptions regarding this calculation, shall be permitted.

Informative Note: Greater amounts of outdoor air may be required in other test cases applying economizer control logic.

5.5.4.1.2.6 Frictionless Ducts, Coils, and Dampers. Airflow through ducts, coils, and dampers shall be frictionless such that there shall be no pressure drops through these components. If the software being tested does not allow frictionless components, the model shall apply the least amount of friction in these components that the software being tested allows.

Informative Note: Modeling of fan heat is as described previously in Section 5.5.4.1.1.

5.5.4.1.2.7 HVAC System Component Air Leakage and Heat Loss. HVAC system components, including ducts, mixing boxes, dampers, fans, and coils, shall have no air leakage and shall have no heat exchange (gains or losses) with their external surroundings. If the software being tested does not allow zero system air leakage or zero external heat gains or losses for HVAC system components, the model shall apply the least amount of air leakage and external heat exchange that the software being tested allows.

Informative Note: Modeling of exhaust and outdoor airflows is as described previously in Sections 5.5.4.1.2.3 and 5.5.4.1.2.5. Modeling of heating and cooling coils is as described in Section 5.5.4.1.4.

5.5.4.1.3 Operation of VAV Terminals. Zone VAV terminals shall operate as follows:

a. Zone VAV terminals are controlled by zone thermostats and maintain zone set points precisely without a throttling range or dead band.
b. Zone VAV terminals shall have airflow capacity and reheat coil heating capacity greater than or equal to those needed to meet the space conditioning requirements of the test case.
c. The VAV terminal dampers shall reduce the zone supply airflows to the zone minimum required airflow rates unless zone space cooling requires higher flows.
d. The VAV terminal minimum airflow rate for each zone shall equal the given zone's exhaust fan mass flow rate. ***Informative Note:*** The minimum required zone airflow rates are those needed to replace the respective zone exhaust fan airflows. Because the exhaust mass flow rates change with zone (exhaust fan inlet) conditions, the VAV terminal minimum mass flow rate also changes.
e. If the minimum zone supply airflow causes a zone temperature to drop below the zone temperature set point, the reheat coil shall modulate to maintain the zone temperature set point. At all other conditions, the reheat coil shall be OFF.
f. If the minimum zone supply airflow causes a zone temperature to rise above the zone temperature set point, the VAV terminal damper shall modulate (open further) to increase the flow of supply air to the zone as required to maintain the zone space cooling set point. ***Informative Note:*** If input values are needed for a maximum or design VAV terminal flow rate, the design nominal zone supply airflow rates provided in Table 5-89 may be used; at the design condition, the VAV terminal dampers are in the fully open position. The current test cases do not require operation at or above 100% design conditions.

5.5.4.1.4 Operation of Preheating, Cooling, and Reheat Coils. The preheating coil, the cooling coil, and the reheat coils shall be modeled as specified for the CV system test base case in Section 5.5.3.1.3.

5.5.4.1.5 Zone Definition. For programs that are not able to specify zone loads directly and are not able to define an adiabatic zone with negative internal gains, skip the remainder of this section, and model the zone by applying the alternative nonadiabatic zone specified in Section 5.5.4.1.6.

Two unattached zones shall be modeled as specified for the CV system test base case in Section 5.5.3.1.4.

5.5.4.1.6 Alternate Zone Specifications. If the program being tested was able to model this test case as specified in Section 5.5.4.1.5, skip this section and proceed to Section 5.5.4.1.7.

For programs that require nonadiabatic zones or are not able to model negative internal gains, the alternate zone specification for the CV system test base case in Section 5.5.3.1.5 shall be applied.

5.5.4.1.7 Zone Temperatures and Thermostat Set Points. These shall be the same as for the CV system test base case as specified in Section 5.5.3.1.6.

5.5.4.1.8 Ambient Conditions. The ambient conditions shall be the same as for the CV system test base case as specified in Section 5.5.3.1.7.

5.5.4.1.9 Output Requirements. The required outputs for this case shall be as specified in Section 6.5.4.

Copyrighted material licensed to Sei Ito on 2020-06-26 for licensee's use only. All rights reserved. No further reproduction or distribution is permitted. Distributed by Techstreet for ASHRAE, www.techstreet.com

Table 5-90 Case AE403 Input Parameters

Ambient Input Parameters	SI Units		I-P Units	
Dry-bulb temperature	15.5°C		59.90°F	
Dew-point temperature [a]	–3.0°C		26.60°F	
Equivalent ambient moisture indicators [a]				
Humidity ratio	0.002948		0.002948	
Wet-bulb temperature	7.206°C		44.971°F	
Relative humidity	27.028%		27.028%	
Relative humidity (TM2) [b]	27%		27%	
Zone Input Parameters	**Zone 1**	**Zone 2**	**Zone 1**	**Zone 2**
Zone sensible cooling load [c]	1465 W	2345 W	5000 Btu/h	8000 Btu/h
Zone dry-bulb temperature [d]	23.333°C	24.444°C	74°F	76°F

a. ***Informative Note:*** Dew-point temperature is exact. The equivalent ambient moisture variables are calculated to the precision shown based on the real-gas model developed by ASHRAE RP-1485[B-21] as implemented in the ASHRAE LibHuAirProp spreadsheet functions [B-22].

b. ***Informative Note:*** The weather data file relative humidity precision is limited to integer percent values by the weather file format and is not as precise as the other equivalent moisture variables. Among the test cases, weather file relative humidities differ from relative humidities specified in various tables of Section 5.5 by <0.22%. The effects of modeling with weather file relative humidities versus specified relative humidities or versus weather file (specified) dew-point temperatures are small (<0.3% on cooling-coil latent loads) as shown in Appendix A of the originating test suite adaptation report[B-6].

c. *Zone sensible cooling load* is defined in Section 3.1.

d. *Zone latent loads*, as defined in Section 3.1, are applied at the given zone air temperature.

Table 5-91 Case AE403 Alternate Zone Definition Input Parameters

Input Parameter	SI Units		I-P Units	
Insulation resistance	100.0 (m^2·K)/W		567.8 (h·ft^2·°F)/Btu	
Supplementary internal gains—sensible	**Zone 1**	**Zone 2**	**Zone 1**	**Zone 2**
	1478.8 W	2359.9 W	5045.8 Btu/h	8052.3 Btu/h

5.5.4.2 VAV Terminal Reheat System Parametric Variations, No Economizer. VAV system noneconomizer cases shall be modeled as revisions to the VAV system base-case model as follows:

Case	Basis for Case
AE403	AE401
AE404	AE401
AE405	AE401
AE406	AE401

Informative Note: It is recommended to double check the Case AE401 base-case inputs and to diagnose Case AE401 results disagreements before proceeding to the other test cases.

5.5.4.2.1 Case AE403: Low Cooling, Dry-Coil 1

Informative Note, Objective of the Test Case: Test model treatment of a VAV terminal reheat system with low sensible cooling load and cool, dry outdoor air.

Informative Note, Method of the Test Case: Use the Case AE401 model with modifications. Dry outdoor air and low sensible and latent loads used in the case ensure sensible only cooling and isolate that portion of the cooling calculation. Compare coil loads with the QAS and with other appropriate test-case results.

5.5.4.2.1.1 Input Specification. This case shall be identical to Case AE401 (see Section 5.5.4.1) except for changes as follows:

a. **Zone and ambient parameters**. Zone and ambient parameters shall be modeled as specified in Table 5-90; only values that change are shown in the table.

b. **Weather data.** If the tested program does not allow constant steady-state ambient conditions to be input directly, use the TMY2-format weather data provided with the following file:

AE103.TM2

These data are provided with the accompanying electronic media and are described in Normative Annex A1, Section A1.3.

c. **Alternate zone definition parameters.** Programs using the alternate zone definition described in Section 5.5.4.1.6 shall apply changes to parameters as indicated in Table 5-91; only values that change are shown in the table. Check output, and adjust modeled internal gains so that, for each zone, total zone sensible cooling load (envelope sensible heat gains plus all sensible internal gains) equals that specified in Table 5-90, and latent cooling load (latent internal gains) equals that specified in Table 5-78 (Case AE301).

Informative Note: For cooling cases, a near-adiabatic zone is applied, through use of insulation with high thermal

Copyrighted material licensed to Sei Ito on 2020-06-26 for licensee's use only. All rights reserved. No further reproduction or distribution is permitted. Distributed by Techstreet for ASHRAE, www.techstreet.com

Table 5-92 Case AE404 Input Parameters

Ambient Input Parameters	SI Units		I-P Units	
Dry-bulb temperature	26.9°C		80.42°F	
Dew-point temperature [a]	22.1°C		71.78°F	
Equivalent ambient moisture indicators [a]				
Humidity ratio	0.016849		0.016849	
Wet-bulb temperature	23.441°C		74.194°F	
Relative humidity	75.023%		75.023%	
Relative humidity (TM2) [b]	75%		75%	
Zone Input Parameters	**Zone 1**	**Zone 2**	**Zone 1**	**Zone 2**
Zone sensible cooling load [c]	2931 W	3517 W	10000 Btu/h	12000 Btu/h
Zone dry-bulb temperature [d]	23.889°C	25.000°C	75°F	77°F

a. ***Informative Note:*** Dew-point temperature is exact. The equivalent ambient moisture variables are calculated to the precision shown based on the real-gas model developed by ASHRAE RP-1485[B-21] as implemented in the ASHRAE LibHuAirProp spreadsheet functions [B-22].

b. ***Informative Note:*** The weather data file relative humidity precision is limited to integer percent values by the weather file format and is not as precise as the other equivalent moisture variables. Among the test cases, weather file relative humidities differ from relative humidities specified in various tables of Section 5.5 by <0.22%. The effects of modeling with weather file relative humidities versus specified relative humidities or versus weather file (specified) dew-point temperatures are small (<0.3% on cooling-coil latent loads) as shown in Appendix A of the originating test suite adaptation report[B-6].

c. *Zone sensible cooling load* is defined in Section 3.1.

d. *Zone latent loads*, as defined in Section 3.1, are applied at the given zone air temperature.

Table 5-93 Case AE404 Alternate Zone Definition Input Parameters

Input Parameter	SI Units		I-P Units	
Insulation resistance	100.0 $(m^2 \cdot K)/W$		567.8 $(h \cdot ft^2 \cdot °F)/Btu$	
Supplementary internal gains—sensible	**Zone 1**	**Zone 2**	**Zone 1**	**Zone 2**
	2925.6 W	3513.6 W	9982.4 Btu/h	11988.9 Btu/h

resistance, to facilitate precise system loading. Use of a near-adiabatic zone was not possible for the heating cases because some programs may not allow direct input of negative internal gains.

5.5.4.2.2 Case AE404: High Cooling, Wet-Coil 1

Informative Note, Objective of the Test Case: Test model treatment of a VAV terminal reheat system with high sensible cooling load and warm, humid outdoor air.

Informative Note, Method of the Test Case: Use the Case AE401 model with modifications. Humid ambient conditions and high sensible cooling load ensure a cold cooling coil with high latent loads. Check cooling-coil leaving-air saturation to verify that the coil bypass factor is zero or near zero. Compare coil loads with the QAS and with other appropriate test-case results.

5.5.4.2.2.1 Input Specification. This case shall be identical to Case AE401 (See Section 5.5.4.1) except for changes as follows:

a. **Zone and ambient parameters.** Zone and ambient parameters shall be modeled as specified in Table 5-92; only values that change are shown in the table.

b. **Weather data.** If the tested program does not allow constant steady-state ambient conditions to be input directly, use the TMY2-format weather data provided with the following file:

AE104.TM2

These data are provided with the accompanying electronic media and are described in Normative Annex A1, Section A1.3.

c. **Alternate zone definition parameters.** Programs using the alternate zone definition described in Section 5.5.4.1.6 shall apply changes to parameters as indicated in Table 5-93; only values that change are shown in the table. Check output, and adjust modeled internal gains so that, for each zone, total zone sensible cooling load (envelope sensible heat gains plus all sensible internal gains) equals that specified in Table 5-92, and latent cooling load (latent internal gains) equals that specified in Table 5-78 (Case AE301).

5.5.4.2.3 Case AE405: Low Cooling, Dry-Coil 1

Informative Note, Objective of the Test Case: Generate results for a VAV terminal reheat system without enthalpy economizer, applying low sensible cooling load and warm, dry outdoor air, to compare with results for the same system with enthalpy economizer (Case AE445).

Informative Note, Method of the Test Case: Use the Case AE401 model with modifications. Case AE405 applies ambient conditions with low wet-bulb temperature to ensure that the economizer operates when it is specified in Case AE445. Compare coil loads with the QAS and with results for Case AE445 (which includes an enthalpy economizer system).

5.5.4.2.3.1 Input Specification. This case shall be identical to Case AE401 (See Section 5.5.4.1) except for changes as follows:

Copyrighted material licensed to Sei Ito on 2020-06-26 for licensee's use only. All rights reserved. No further reproduction or distribution is permitted. Distributed by Techstreet for ASHRAE, www.techstreet.com

Table 5-94 Case AE405 Input Parameters

Ambient Input Parameters	SI Units		I-P Units	
Dry-bulb temperature	24.9°C		76.82°F	
Dew-point temperature [a]	2.4°C		36.32°F	
Equivalent ambient moisture indicators [a]				
Humidity ratio	0.004510		0.004510	
Wet-bulb temperature	13.027°C		55.449°F	
Relative humidity	23.050%		23.050%	
Relative humidity (TM2) [b]	23%		23%	
Zone Input Parameters	**Zone 1**	**Zone 2**	**Zone 1**	**Zone 2**
Zone sensible cooling load [c]	1465 W	2345 W	5000 Btu/h	8000 Btu/h
Zone dry-bulb temperature [d]	23.333°C	24.444°C	74°F	76°F

a. ***Informative Note:*** Dew-point temperature is exact. The equivalent ambient moisture variables are calculated to the precision shown based on the real-gas model developed by ASHRAE RP-1485[B-21] as implemented in the ASHRAE LibHuAirProp spreadsheet functions [B-22].

b. ***Informative Note:*** The weather data file relative humidity precision is limited to integer percent values by the weather file format and is not as precise as the other equivalent moisture variables. Among the test cases, weather file relative humidities differ from relative humidities specified in various tables of Section 5.5 by <0.22%. The effects of modeling with weather file relative humidities versus specified relative humidities or versus weather file (specified) dew-point temperatures are small (<0.3% on cooling-coil latent loads) as shown in Appendix A of the originating test suite adaptation report[B-6].

c. *Zone sensible cooling load* is defined in Section 3.1.

d. *Zone latent loads*, as defined in Section 3.1, are applied at the given zone air temperature.

Table 5-95 Case AE405 Alternate Zone Definition Input Parameters

Input Parameter	SI Units		I-P Units	
Insulation resistance	100.0 (m^2·K)/W		567.8 (h·ft^2·°F)/Btu	
Supplementary internal gains—sensible	**Zone 1**	**Zone 2**	**Zone 1**	**Zone 2**
	1462.7 W	2343.8 W	4990.8 Btu/h	7997.3 Btu/h

a. **Zone and ambient parameters**. Zone and ambient parameters shall be modeled as specified in Table 5-94; only values that change are shown in the table.

b. **Weather data.** If the tested program does not allow constant steady-state ambient conditions to be input directly, use the TMY2-format weather data provided with the following file:

AE105.TM2

These data are provided with the accompanying electronic media and are described in Normative Annex A1, Section A1.3.

c. **Alternate zone definition parameters.** Programs using the alternate zone definition described in Section 5.5.4.1.6 shall apply changes to parameters as indicated in Table 5-95; only values that change are shown in the table. Check output, and adjust modeled internal gains so that, for each zone, total zone sensible cooling load (envelope sensible heat gains plus all sensible internal gains) equals that specified in Table 5-94, and latent cooling load (latent internal gains) equals that specified in Table 5-78 (Case AE301).

5.5.4.2.4 Case AE406: Low Cooling, Wet-Coil 1

Informative Note, Objective of the Test Case: Generate results for a VAV terminal reheat system without dry-bulb economizer, applying low sensible cooling load at warm, humid outdoor air conditions, to compare with results for the same system with dry-bulb economizer (Case AE426).

Informative Note, Method of the Test Case: Use the Case AE401 model with modifications. Case AE406 applies an ambient dry-bulb temperature that ensures the economizer operates when it is specified in Case AE426. Humid ambient conditions and high sensible cooling load ensure a cold cooling coil with high latent loads. Check the cooling-coil leaving-air saturation to verify that the coil bypass factor is zero or near zero. Compare coil loads with the QAS and with results for Case AE426 (which includes a comparative dry-bulb economizer system).

5.5.4.2.4.1 Input Specification. This case shall be identical to Case AE401 (See Section 5.5.4.1) except for changes as follows:

a. **Zone and ambient parameters**. Zone and ambient parameters shall be modeled as specified in Table 5-96; only values that change are shown in the table.

b. **Weather data.** If the tested program does not allow constant steady-state ambient conditions to be input directly, use the TMY2-format weather data provided with the following file:

AE106.TM2

Copyrighted material licensed to Sei Ito on 2020-06-26 for licensee's use only. All rights reserved. No further reproduction or distribution is permitted. Distributed by Techstreet for ASHRAE, www.techstreet.com

Table 5-96 Case AE406 Input Parameters

Ambient Input Parameters	SI Units		I-P Units	
Dry-bulb temperature	23.0°C		73.40°F	
Dew-point temperature [a]	20.9°C		69.62°F	
Equivalent ambient moisture indicators [a]				
Humidity ratio	0.015625		0.015625	
Wet-bulb temperature	21.523°C		70.741°F	
Relative humidity	87.968%		87.968%	
Relative humidity (TM2) [b]	88%		88%	
Zone Input Parameters	**Zone 1**	**Zone 2**	**Zone 1**	**Zone 2**
Zone sensible cooling load [c]	1465 W	2345 W	5000 Btu/h	8000 Btu/h
Zone dry-bulb temperature [d]	23.333°C	24.444°C	74°F	76°F

a. ***Informative Note:*** Dew-point temperature is exact. The equivalent ambient moisture variables are calculated to the precision shown based on the real-gas model developed by ASHRAE RP-1485[B-21] as implemented in the ASHRAE LibHuAirProp spreadsheet functions [B-22].

b. ***Informative Note:*** The weather data file relative humidity precision is limited to integer percent values by the weather file format and is not as precise as the other equivalent moisture variables. Among the test cases, weather file relative humidities differ from relative humidities specified in various tables of Section 5.5 by <0.22%. The effects of modeling with weather file relative humidities versus specified relative humidities or versus weather file (specified) dew-point temperatures are small (<0.3% on cooling-coil latent loads) as shown in Appendix A of the originating test suite adaptation report[B-6].

c. *Zone sensible cooling load* is defined in Section 3.1.

d. *Zone latent loads*, as defined in Section 3.1, are applied at the given zone air temperature.

Table 5-97 Case AE406 Alternate Zone Definition Input Parameters

Input Parameter	SI Units		I-P Units	
Insulation resistance	100.0 (m^2·K)/W		567.8 (h·ft^2·°F)/Btu	
Supplementary internal gains—sensible	**Zone 1**	**Zone 2**	**Zone 1**	**Zone 2**
	1465.4 W	2347.0 W	5000.0 Btu/h	8008.4 Btu/h

These data are provided with the accompanying electronic media and are described in Normative Annex A1, Section A1.3.

c. **Alternate zone definition parameters.** Programs using the alternate zone definition described in Section 5.5.4.1.6 shall apply changes to parameters as indicated in Table 5-97; only values that change are shown in the table. Check output, and adjust modeled internal gains so that, for each zone, total zone sensible cooling load (envelope sensible heat gains plus all sensible internal gains) equals that specified in Table 5-96, and latent cooling load (latent internal gains) equals that specified in Table 5-78 (Case AE301).

5.5.4.3 Variable-Air-Volume Terminal Reheat System Parametric Variations, with Economizer. Base cases for the VAV system economizer cases shall be as follows:

Case	Basis for Case
AE426	AE406
AE445	AE405

5.5.4.3.1 Case AE426: Low Cooling, Wet-Coil 1 with Return-Air Comparative Dry-Bulb Economizer Outdoor Air Control. This test case shall be modeled with identical zone and system inputs as Case AE406 except for the existence of a return-air comparative dry-bulb economizer as described in Section 5.5.3.3.1.1.1 (Case AE326).

Informative Note, Objective of the Test Case: Test model treatment of a VAV terminal reheat air system with return-air comparative dry-bulb economizer at low sensible cooling load and warm, humid outdoor air conditions.

Informative Note, Method of the Test Case: Use the Case AE406 model as defined in Section 5.5.4.2.4, and add the economizer as described in Section 5.5.3.3.1.1.1. Compare coil loads with the QAS and with results for Case AE406.

Informative Note: For the given economizer control logic, at the given steady-state operating conditions, some cooling loads are increased by varying amounts.

5.5.4.3.1.1 Input Specification. Case AE426 shall be identical to Case AE406 (see Section 5.5.4.2.4) except for the addition of a return-air comparative dry-bulb temperature economizer outdoor air control as specified in Section 5.5.3.3.1.1.1. Where Figure 5-28 is indicated in Section 5.5.3.3.1.1.1 (for Case AE326), Figure 5-29 shall be applied for this case (AE426).

Informative Note: The operation of the VAV system supply-air fan is independent of the operation of the economizer. The VAV system supply-air fan continues to modulate the supply airflow as needed to satisfy zone loads.

Copyrighted material licensed to Sei Ito on 2020-06-26 for licensee's use only. All rights reserved. No further reproduction or distribution is permitted. Distributed by Techstreet for ASHRAE, www.techstreet.com

5.5.4.3.2 Case AE445: Low Cooling, Dry-Coil 1 with Return-Air Comparative Enthalpy Economizer Outdoor Air Control. This test case shall be modeled with identical zone and system inputs as Case AE405 except for the existence of a return-air comparative enthalpy economizer as described in Section 5.5.3.3.2.1.1 (Case AE345).

Informative Note, Objective of the Test Case: Test model treatment of a VAV terminal reheat system with return-air comparative enthalpy economizer at low sensible cooling load at warm, dry outdoor air conditions.

Informative Note, Method of the Test Case: Use the Case AE405 model as defined in Section 5.5.4.2.3, and add the economizer as described in Section 5.5.3.3.2.1.1. Compare coil loads with the QAS and with results for Case AE405.

Informative Note: For the given economizer control logic, at the given steady-state operating conditions, some cooling loads are increased by varying amounts.

5.5.4.3.2.1 Input Specification. Case AE445 shall be identical to Case AE405 (see Section 5.5.4.2.3) except for the addition of a return-air comparative enthalpy economizer outdoor air control as specified in Section 5.5.3.3.2.1.1. Where Figure 5-28 is indicated in Section 5.5.3.3.2.1.1 (for Case AE345), Figure 5-29 shall be applied for this case (AE445).

Informative Note: The operation of the VAV system supply-air fan is independent of the operation of the economizer. The VAV system supply-air fan continues to modulate the supply airflow as needed to satisfy zone loads.

Copyrighted material licensed to Sei Ito on 2020-06-26 for licensee's use only.
All rights reserved. No further reproduction or distribution is permitted. Distributed by Techstreet for ASHRAE, www.techstreet.com

6. CLASS I OUTPUT REQUIREMENTS

Class I output requirements listed in Section 6 shall be applied as specified in Section 5.

6.1 Reporting Results

6.1.1 Standard Output Reports. The standard output reports included on the accompanying electronic media shall be used. Instructions regarding these reports are included in Normative Annex A2. Information required for this report includes the following:

a. Software name and version number
b. Modeling documentation using "S140outNotes.TXT" on the accompanying electronic media for the following:
   1. Software identifying information and operating requirements
   2. Modeling methods used when alternative methods are available in the software (as specified in Section 5.1.4)
   3. Equivalent modeling methods used when the software does not allow direct input of specified values (as specified in Section 5.1.5)
   4. Nonspecified inputs (as specified in Section 5.1.6)
   5. Changes to source code for the purpose of running the tests, where such changes are not available in publicly released versions of the software (as specified in Section 5.1.9)
   6. Omitted test cases and results (as specified in Section 6.1.3)
   7. Anomalous results (as specified in Section 6.1.4)
c. Results for simulated cases using the following files on the accompanying electronic media:
   1. Sec5-2Aout.XLS for the building thermal envelope and fabric load tests of Sections 5.2.1, 5.2.2, and 5.2.3
   2. Sec5-2Bout.XLS for the ground-coupled slab-on-grade analytical verification tests of Section 5.2.4
   3. Sec5-3Aout.XLS for the space-cooling-equipment performance analytical verification tests of Sections 5.3.1 and 5.3.2
   4. Sec5-3Bout.XLS for the space-cooling-equipment performance comparative tests of Sections 5.3.3 and 5.3.4
   5. Sec5-4out.XLS for the space-heating-equipment performance tests of Section 5.4
   6. Sec5-5out.XLSX for the air-side HVAC equipment performance analytical verification tests of Section 5.5

For the specific output quantities required in the results report for each case, refer to the appropriate subsections of Sections 5.2, 5.3, 5.4, and 5.5.

6.1.2 Simulation Input Files. All supporting data required for generating results with the tested software shall be saved, including the following:

- Input files
- Processed weather data
- Intermediate files containing calculations used for developing inputs
- A "Readme-softwarename-yymmdd.pdf" file that briefly describes the contents of the above files according to their file type (i.e., their ".xyz" file extension)

6.1.3 Omitted Test Cases. If a program being tested omits a test case, the modeler shall provide an explanation of the omission using the modeler report template provided in Normative Annex A2.

6.1.4 Discussion of Anomalous Results. Explanation of anomalous test results using the modeler report template provided in Normative Annex A2 shall be permitted but is not required.

6.2 Output Requirements for Building Thermal Envelope and Fabric Load and Ground-Coupled Slab-on-Grade Tests of Section 5.2.

Required output shall be as specified in the sections below.

6.2.1 Output Requirements for Building Thermal Envelope and Fabric Load Tests of Sections 5.2.1, 5.2.2, and 5.2.3

6.2.1.1 All Non-Free-Float Cases. Required outputs for the non-free-float cases shall be as designated in Sections 6.2.1.1.1 through 6.2.1.1.5.

Informative Note: In this description, the term "free-float cases" refers to cases designated with "FF" in the case description (i.e., 600FF, 650FF, 900FF, 950FF); non-free-float cases are all the other cases described in Sections 5.2.1, 5.2.2, and 5.2.3 (Tables B1-2 and B1-3 of Informative Annex B1 include an informative summary listing of the cases of Sections 5.2.1, 5.2.2, and 5.2.3).

6.2.1.1.1 Annual heating load (MWh).

6.2.1.1.2 Annual sensible cooling loads (MWh).

6.2.1.1.3 Annual hourly integrated peak heating load (kW) with date and hour of occurrence.

6.2.1.1.4 Annual hourly integrated peak sensible cooling load (kW) with date and hour of occurrence.

6.2.1.1.5 All heating and cooling loads listed in Sections 6.2.1.1.1 through 6.2.1.1.4 shall be entered into the appropriate standard output report (as specified in Normative Annex A2) as positive values (≥0).

6.2.1.2 Case 600 Only

6.2.1.2.1 Annual incident unshaded total solar radiation (diffuse and direct) on north, east, west, south, and horizontal surfaces (kWh/m^2).

6.2.1.2.2 Unshaded annual transmitted solar radiation (diffuse and direct) through south windows (kWh/m^2). This quantity does not include radiation that is absorbed in the glass and conducted inward as heat.

Informative Note: This quantity may be taken as the optically transmitted solar radiation through a window that is backed by a perfectly absorbing black cavity.

6.2.1.3 Case 610 Only

6.2.1.3.1 Annual transmitted solar radiation through the shaded south window with a horizontal overhang (kWh/m^2).

6.2.1.4 Case 620 Only

6.2.1.4.1 Unshaded annual transmitted solar radiation (diffuse and direct) through the west window (kWh/m^2). This quantity does not include radiation that is absorbed in the glass and conducted inward as heat.

Informative Note: This quantity may be taken as the optically transmitted solar radiation through a window that is backed by a perfectly absorbing black cavity.

Copyrighted material licensed to Sei Ito on 2020-06-26 for licensee's use only.
All rights reserved. No further reproduction or distribution is permitted. Distributed by Techstreet for ASHRAE, www.techstreet.com

Table 6-1 Daily Hourly Output Requirements for Building Thermal Envelope and Fabric Load Tests of Sections 5.2.1 and 5.2.2

Case	Hourly Outputs*	Day
600	Hourly incident unshaded solar radiation (direct and diffuse) on south and west surfaces (Wh/m^2)	March 5
600	Hourly incident unshaded solar radiation (direct and diffuse) on south and west surfaces (Wh/m^2)	July 27
600	Hourly heating (+) and sensible cooling (–) loads (kWh, designate cooling with a [–] sign)	January 4
900	Hourly heating (+) and sensible cooling (–) loads (kWh, designate cooling with a [–] sign)	January 4
600FF	Hourly free-float zone air temperature (°C)	January 4
650FF	Hourly free-float zone air temperature (°C)	July 27
900FF	Hourly free-float zone air temperature (°C)	January 4
950FF	Hourly free-float zone air temperature (°C)	July 27

*Hourly data to consist of 24 values for each day. The first hour (hour 1) is defined to run from 0000 to 0100 hours.

6.2.1.5 Case 630 Only

6.2.1.5.1 Annual transmitted solar radiation through the shaded west window with horizontal overhang and vertical fins (kWh/m^2).

6.2.1.6 All Free-Float Cases. Required outputs for the freefloat cases shall be as designated in Sections 6.2.1.6.1 through 6.2.1.6.3.

Informative Note: In this description, the term "free-float cases" refers to cases designated with "FF" in the case description (i.e., 600FF, 650FF, 900FF, 950FF and for just the sun zone in Case 960).

6.2.1.6.1 Annual hourly integrated maximum zone air temperature (°C) with date and hour of occurrence.

6.2.1.6.2 Annual hourly integrated minimum zone air temperature (°C) with date and hour of occurrence.

6.2.1.6.3 Annual mean zone air temperature (°C).

Informative Note: For all cases where free-float zone air temperature output is required, the free-float zone air temperature is for the zone air only, assuming well-mixed air with no radiant effects (i.e., equivalent to what would be obtained from an aspirated temperature sensor perfectly shielded from solar and infrared radiation).

6.2.1.7 Case 900FF Only

6.2.1.7.1 Annual hourly 1°C zone air temperature bin frequencies from –20°C to 70°C, where "bin frequency" is the number of hours a given zone air temperature has values within given bins (1°C bin width) during the annual simulation. Zone air temperature bins are defined by an integer value of temperature as the lower bound (inclusive) of the range, the upper bound of the range being less than the next highest integer value.

Informative Note: For example, the zone air temperature T bin defined by 20°C is 20°C ≤ T < 21°C; similarly, the bin defined by –2°C is –2°C ≤ T < –1°C.

Output Example: Output from an annual simulation (8760 hours) might indicate 400 hours when the zone air temperature T is 25°C (25°C ≤ T < 26°C), and 430 hours when the zone air temperature is 28°C (28°C ≤ T < 29°C), with temperatures for remaining hours distributed among other bins as appropriate.

Additional information regarding this calculation is provided in Informative Annex B12.

6.2.1.8 Daily Hourly Output for Building Thermal Envelope and Fabric Load Tests of Sections 5.2.1 and 5.2.2. If the program being tested is capable of producing hourly outputs, the following hourly values for the specified days shall be provided. To produce this output, the simulation period shall be a typical annual run, as specified in Sections 5.1.7 and 5.1.8.1. Running the simulation for only the required days specified in the output requirements shall be prohibited, because the results could contain temperature history errors. Required outputs shall be as listed for specific cases in Table 6-1.

6.2.2 Output for Ground-Coupled Slab-on-Grade Analytical Verification Tests of Section 5.2.4

6.2.2.1 Output Requirements for Steady-State Cases: GC30b, GC60b, GC65b, GC30a, GC30c

6.2.2.1.1 Last Hour of Simulation Outputs. The following outputs shall be provided for the last hour of the simulation:

a. Conduction through the floor slab q_{floor} in W or Wh/h; this is specifically conduction through the interior surface of the slab defined by dimensions $B \times L$ in Figure 5-9 (see Section 5.2.4.1.1.1).
b. Zone load q_{zone} in W or Wh/h. If the program being tested does not have different outputs for zone load and floor conduction, the available output shall be reported where it is most appropriate and the other output left blank. ***Informative Note:*** For example, report the results only as floor conduction, and do not report any zone load results. Zone load outputs should only vary from floor slab conduction if the program being tested does not allow fully adiabatic above-grade walls. Models run independently of whole-building simulations may have limited output options here.
c. Zone air temperature T_{zone} (°C). ***Informative Note:*** This output checks the temperature that results from the given thermostat set point.
d. Steady-state near-surface temperatures $T_{surf,n}$ (°C) as described in Table 6-2 and Figure 6-1 except Case GC30c. The temperatures shall be for the uppermost modeled layer of soil just below the ground surface at consistent depth.

Copyrighted material licensed to Sei Ito on 2020-06-26 for licensee's use only. All rights reserved. No further reproduction or distribution is permitted. Distributed by Techstreet for ASHRAE, www.techstreet.com

Table 6-2 *x* and *y* Coordinates of Near-Surface Temperature Outputs

Location, *n*	*y* (cm)	*x* (cm)	*Tsurf,n* (°C)
1	0	0	
2	0	433	
3	0	554	
4	0	587	
5	0	596	
6	0	600	
7	0	602	
8	0	605	
9	0	612	
10	0	619	
11	0	622	
12	0	624	
13	0	628	
14	0	640	
15	0	687	
16	0	876	
17	0	1628	
18	0	4624	
Location, *n*	***y* (cm)**	***x* (cm)**	***Tsurf,n* (°C)**
1	0	0	
19	433	433	
20	554	554	
21	587	587	
22	596	596	
23	600	600	
24	602	602	
25	605	605	
26	612	612	
27	619	619	
28	622	622	
29	624	624	
30	628	628	
31	640	640	
32	687	687	
33	876	876	
34	1628	1628	
35	4624	4624	

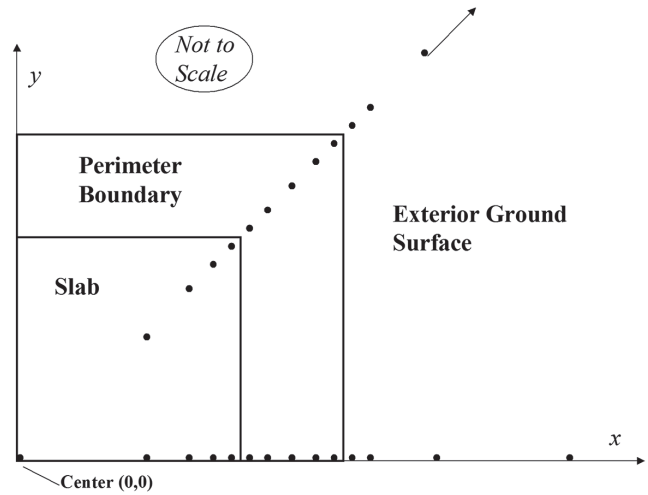

Figure 6-1 Conceptual plan view of near-surface temperature outputs.

For defining coordinates, the center of the floor slab shall be designated as (0,0) as shown in Figure 6-1.

Informative Note: Figure 6-1 represents a single quadrant of the symmetric slab/perimeter boundary/exterior surfaces.

6.2.2.1.1.1 Case GC30a Exception. For Case GC30a, if the model being tested uses direct input of interior slab surface temperature, and a building zone is not modeled, the following results are not required:

a. Zone load q_{zone} in W or Wh/h
b. Zone air temperature T_{zone} (°C)

6.2.2.1.2 Other Outputs. These additional outputs shall be provided:

a. Duration of simulation t_{sim} in hours. ***Informative Note:*** This is the number of hours simulated (e.g., if ten years are simulated, indicate 87,600 hours).

6.2.2.2 Output Requirements for Harmonic Variation of Ambient Temperature Cases: GC40b, GC45b, GC50b, GC55b, GC70b, GC80b, GC40a, GC40c, GC45c, GC55c, GC80c

6.2.2.2.1 Last Year of Simulation Outputs. The following outputs shall be provided for only the last full year of the simulation:

a. Annual total conduction through the floor slab Q_{floor} (kWh/y); this is specifically conduction through the interior surface of the slab defined by dimensions $B \times L$ in Figure 5-9 (see Section 5.2.4.1.1.1). For dimensions of B and L in cases GC45b, GC50b, and GC45c, see Tables 5-24, 5-25, and 5-32, respectively.
b. Annual total zone load Q_{zone} (kWh/y). If the program being tested does not have different outputs for zone load and floor conduction, the available output shall be reported where it is most appropriate and the other output left blank. ***Informative Note:*** For example, report the results only as floor conduction, and do not report any

Copyrighted material licensed to Sei Ito on 2020-06-26 for licensee's use only. All rights reserved. No further reproduction or distribution is permitted. Distributed by Techstreet for ASHRAE, www.techstreet.com

zone load results. Zone load outputs should only vary from floor slab conduction if the program being tested does not allow fully adiabatic above-grade walls. Models run independently of whole-building simulations may have limited output options here.

c. Annual average zone temperature $T_{zone,mean}$ (°C). ***Informative Note:*** This output checks the temperature that results from the given thermostat set point.
d. Annual hourly integrated peak floor conduction $q_{floor,max}$ (Wh/h or W) for the year and the hour of occurrence; this is specifically the peak conduction through the interior surface of the slab defined by dimensions $B \times L$ in Figure 5-9 (see Section 5.2.4.1.1.1). For dimensions of B and L in cases GC45b, GC50b, and GC45c, see Tables 5-24, 5-25, and 5-32, respectively.
e. Annual hourly integrated peak zone load $q_{zone,max}$ (Wh/h or W) for the year and the hour of occurrence. ***Informative Note:*** This output should only vary from floor slab conduction if the program being tested does not allow fully adiabatic above-grade walls.
f. Minimum hourly ambient temperature $T_{ODB,min}$ (°C) and first hour of occurrence.
g. Number of hours with minimum hourly *To,a*.
h. For Cases GC40b, GC40a, GC40c only: Hourly floor conduction (Wh/h or W) for the entire year; this is specifically hourly conduction through the interior surface of the slab defined by dimensions $B \times L$ in Figure 5-9 (see Section 5.2.4.1.1.1).
i. Hourly time convention; e.g., Hour 1 = 0:00 to 1:00, or Hour 1 = 0:30 to 1:30.

6.2.2.2.2 Other Outputs. The following additional output shall be provided:

a. Duration of simulation t_{sim} in hours. ***Informative Note:*** This is the number of hours simulated; e.g., if ten years are simulated, indicate 87,600 hours.

6.2.2.2.2.1 Case GC40a Exception. For case GC40a, if the model being tested applies direct input of interior slab surface temperature and a building zone is not modeled, the following results are not required:

a. Annual total zone load Q_{zone} (kWh/y)
b. Annual average zone temperature $T_{zone,mean}$ (°C)
c. Annual hourly integrated peak zone load $q_{zone,max}$ (Wh/h or W) for the year, including hour of occurrence

6.2.2.3 Output Requirements for Case GC10a—Analytical Solution Case

6.2.2.3.1 Last Hour of Simulation Outputs. The following outputs shall be provided for the last hour of the simulation:

a. Steady-state conduction through the floor slab q_{floor} (W or Wh/h); this is specifically hourly conduction through the interior surface of the slab defined by dimensions $B \times L$ in Figure 5-12 and Table 5-29 (see Section 5.2.4.2.1.1).
b. Steady-state near-surface temperatures $T_{surf,n}$ (°C) as described in Figure 6-1 and Table 6-2 (see Section 6.2.2.1.1.d). The temperatures shall be for the uppermost modeled layer of soil just below the ground surface at a consistent depth. For defining coordinates, the center of the floor slab shall be designated as (0,0) as shown in Figure 6-1. ***Informative Note:*** These outputs are for comparison with models that do not provide results precisely at the surface. ***Informative Note:*** Figure 6-1 represents a single quadrant of the symmetric slab/perimeter-boundary/exterior surfaces.
c. Steady-state surface temperatures $T_{@surf,n}$ (°C) as described for $T_{surf,n}$ in Figure 6-1 and Table 6-2 (see Section 6.2.2.1.1[d]). For defining coordinates, the center of the floor slab is designated as (0,0) as shown in Figure 6-1. ***Informative Note:*** These outputs are for checking proper application of surface temperature boundary conditions. ***Informative Note:*** Figure 6-1 represents a single quadrant of the symmetric slab/perimeter boundary/exterior surfaces.

6.2.2.3.2 Other Outputs. The following additional outputs shall be provided:

a. Duration of simulation t_{sim} in hours
b. Deep-ground temperature depth (*E*; See Section 5.2.4.1.1.1, Figure 5-8)
c. Far-field boundary distance (*F*; See Section 5.2.4.1.1.1, Figure 5-8)

6.3 Output Requirements for Space-Cooling Equipment Performance Tests of Section 5.3. Required output shall be as specified in the sections below. See Section 3 for definitions of terms used below.

6.3.1 Analytical Verification Tests of Sections 5.3.1 and 5.3.2. The outputs listed immediately below shall include loads or consumptions (as appropriate) for the entire month of February (the second month in the weather data sets).

6.3.1.1 Cooling Energy Consumptions, kWh

a. Total consumption (compressor and fans)
b. Disaggregated compressor consumption
c. Disaggregated indoor air distribution fan consumption
d. Disaggregated outdoor condenser fan consumption

6.3.1.2 Evaporator Coil Loads, kWh

a. Total evaporator coil load (sensible + latent)
b. Disaggregated sensible evaporator coil load
c. Disaggregated latent evaporator coil load

6.3.1.3 Zone cooling Loads, kWh

a. Total cooling load (sensible + latent)
b. Disaggregated sensible cooling load
c. Disaggregated latent cooling load

6.3.1.4 The outputs listed immediately below shall include the mean value for the month of February and the hourly integrated maximum and minimum values for the month of February.

a. Calculated coefficient of performance (COP), dimensionless

$$\frac{\text{(Net refrigeration effect)}}{\text{(Total cooling energy consumption)}}$$

b. Zone dry-bulb temperature, °C
c. Zone humidity ratio, kg moisture/kg dry air

Copyrighted material licensed to Sei Ito on 2020-06-26 for licensee's use only. All rights reserved. No further reproduction or distribution is permitted. Distributed by Techstreet for ASHRAE, www.techstreet.com

6.3.2 Comparative Tests of Sections 5.3.3 and 5.3.4

6.3.2.1 Cases CE300 through CE545 (for output period January 1 through December 31)

6.3.2.1.1 Annual Summations (except Case CE510). The outputs listed immediately below shall include summed loads or consumptions (as appropriate) for the full annual simulation (full year).

6.3.2.1.1.1 Cooling Energy Consumption, kWh

a. Total consumption (Compressor + Outdoor condenser fan + Indoor air distribution fan)
b. Disaggregated compressor consumption
c. Disaggregated outdoor condenser fan consumption
d. Disaggregated indoor air distribution fan consumption

6.3.2.1.1.2 Evaporator Coil Loads, kWh

a. Total evaporator coil load (Sensible + Latent)
b. Disaggregated sensible evaporator coil load
c. Disaggregated latent evaporator coil load

6.3.2.1.2 Annual Means (except Case CE510). The outputs listed immediately below shall include the mean value for the full annual simulation:

a. Zone indoor dry-bulb temperature (IDB), °C
b. Zone humidity ratio, kg moisture/kg dry air
c. Zone relative humidity, %
d. Coefficient of performance, excluding indoor fan energy consumption (COP2)

The mean value for COP2 shall be calculated as

$$COP2_{mean} = \Sigma(\text{Total evaporator coil load})/[\Sigma(\text{Compressor consumption}) + \Sigma(\text{Outdoor fan consumption})]$$

where Σ indicates annual summation of the given value.

Informative Note: For example, if for an annual simulation,

Total coil load (Sensible + Latent) = 28500 kWh thermal, and

Combined compressor and outdoor-fan consumption = 6240 kWh electric, then

$$COP2_{mean} = 28500 \text{ kWh}/6240 \text{ kWh} = 4.567.$$

6.3.2.1.3 Annual Hourly Maximum Values Only. The outputs listed immediately below shall include the hourly integrated maximum values for the full annual simulation. Maximum values shall include date and hour of occurrence; if there are multiple hours of occurrence for the maximum value, the time and date for the first hour of the maximum value occurrence shall be provided.

6.3.2.1.3.1 Total cooling energy consumption (compressor and both fans), Wh.

6.3.2.1.3.2 Evaporator Coil Loads, Wh

a. Total evaporator coil load (Sensible + Latent)
b. Disaggregated sensible evaporator coil load
c. Disaggregated latent evaporator coil load

6.3.2.1.4 Annual Maxima and Minima (Except Cases CE500 through CE545). The outputs listed immediately below shall include the hourly integrated maximum and minimum values for the full annual simulation. Maximum and minimum values shall include date and hour of occurrence. If there are multiple hours of occurrence for the maximum and/or minimum values, the time and date for the first hour of the occurrence shall be provided.

a. Zone indoor dry-bulb temperature (IDB), °C
b. Zone humidity ratio, kg moisture/kg dry air
c. Zone relative humidity, %
d. Coefficient of performance, excluding indoor fan energy consumption (COP2)

Informative Note: If the software being tested does not output enough significant digits, maximum and minimum values for COP2 can be generated by rounding uncertainty. If this is the case, when determining maximum and minimum COP2 it will be necessary to filter out lower part-load ratio (PLR) outputs (e.g., for PLR < 0.01).

6.3.2.2 Additional Outputs for Case CE300 Only

6.3.2.2.1 Annual Means and Maximum Values (Weather Data Checks). The outputs listed immediately below shall include the mean value for the full annual simulation and the hourly integrated maximum values for the full annual simulation. Maximum values shall include date and hour of occurrence. If there are multiple hours of occurrence for the maximum value, the time and date for the first hour of the occurrence shall be provided.

a. Outdoor dry-bulb temperature (ODB), °C
b. Outdoor humidity ratio, kg/kg

6.3.2.2.2 Hourly Outputs for June 28 (all 24 Hours)

a. Compressor electric consumption, Wh
b. Outdoor condenser fan electric consumption, Wh
c. Total evaporator coil load (Sensible + Latent), Wh
d. Sensible evaporator coil load, Wh
e. Latent evaporator coil load, Wh
f. COP2
g. Zone humidity ratio, kg/kg
h. ODB, °C
i. Entering dry-bulb temperature (EDB), same as mixed-air dry-bulb temperature, °C
j. Entering wet-bulb temperature (EWB), same as mixed-air wet-bulb temperature, °C
k. Outdoor humidity ratio, kg/kg

The hourly data are to consist of 24 values for each day. The first hour (hour 1) is defined to run from midnight (0:00) to 1 A.M. (1:00). To produce this output, the simulation period shall be for a typical annual run, as specified in Sections 5.1.7 and 5.1.8.1. Running the simulation only for the required days specified in the output requirements shall be prohibited because the results could contain temperature history errors.

6.3.2.3 Cases CE500 through CE545 Annual Maxima and Minima. The outputs listed immediately below shall include the hourly integrated maximum and minimum values from a full annual simulation. Maximum and minimum values shall include date and hour of occurrence. If there are multiple hours of occurrence for the maximum and/or minimum values, the time and date for the first hour of the occurrence shall be provided.

Copyrighted material licensed to Sei Ito on 2020-06-26 for licensee's use only. All rights reserved. No further reproduction or distribution is permitted. Distributed by Techstreet for ASHRAE, www.techstreet.com

6.3.2.3.1 For Output Period January 1 through December 31

a. Maximum zone indoor dry-bulb temperature (IDB), °C
b. Maximum zone humidity ratio, kg moisture/kg dry air
c. Maximum COP2
d. Minimum COP2

Informative Note: If the software being tested does not output enough significant digits, maximum and minimum values for COP2 can be generated by rounding uncertainty. If this is the case, when determining maximum and minimum COP2 it will be necessary to filter out lower part-load ratio (PLR) outputs (e.g., for PLR < 0.01).

6.3.2.3.2 For Output Period April 1 through December 31

a. Minimum zone indoor dry-bulb temperature (IDB), °C
b. Minimum zone humidity ratio, kg moisture/kg dry air
c. Maximum zone relative humidity, %
d. Minimum zone relative humidity, %

This output shall be extracted from a typical annual simulation run, as specified in Sections 5.1.7 and 5.1.8.1. Running an additional simulation beginning on April 1 shall be prohibited because the above results could contain temperature history errors.

Informative Note: These four values are selected after the first three months of simulation to avoid differences in results that could be caused by differences in zone initialization techniques.

6.3.2.4 PLR Sensitivity, Cases CE500 and CE510 Only (for Output Period May 1 to September 30). For cases CE500 and CE510, only the following outputs for the period of May 1 through September 30 shall be provided. This output shall be extracted from a typical annual simulation run, as specified in Sections 5.1.7 and 5.1.8.1. Running only the months specified in the output requirements is prohibited because the results could contain temperature history errors.

Informative Note: This output provides a sensitivity test of performance as a function of PLR.

6.3.2.4.1 Summed Values

a. Total cooling energy consumption (Compressor + Outdoor condenser fan + Indoor air distribution fan), kWh
b. Compressor electric consumption, kWh
c. Outdoor condenser fan electric consumption, kWh
d. Indoor air distribution fan electric consumption, kWh
e. Total evaporator coil load (Sensible + Latent), kWh
f. Sensible evaporator coil load, kWh
g. Latent evaporator coil load, kWh

6.3.2.4.2 Mean Values

a. COP2 = Σ(Total coil load)/[Σ(Compressor energy) + Σ(Outdoor fan energy)], for May through September 30
b. Zone IDB, °C
c. Zone humidity ratio, kg/kg
d. Zone relative humidity, %

6.3.2.5 ODB Sensitivity, Cases CE500 and CE530 Only, Average Daily Outputs for April 30 and June 25 Only. The following daily average per-hour outputs (consumptions and coil loads are full-day sums divided by 24 [hours]) for April 30 and June 25 (0:00 to 24:00) shall be provided:

a. Total cooling energy consumption (Compressor + Outdoor condenser fan + Indoor air distribution fan), Wh
b. Compressor electric consumption, Wh
c. Outdoor condenser fan electric consumption, Wh
d. Indoor air distribution fan electric consumption, Wh
e. Total evaporator coil load (Sensible + Latent), Wh
f. Sensible evaporator coil load, Wh
g. Latent evaporator coil load, Wh
h. COP2 =Σ(Total coil load)/[Σ(Compressor energy) + Σ(Outdoor fan energy)], for the given day
i. Zone humidity ratio, kg/kg
j. ODB, °C
k. EDB, °C

Informative Note: This output provides a sensitivity test of performance as a function of ODB.

6.4 Output Requirements for Space-Heating Equipment Performance Tests of Section 5.4. The values listed below shall be provided and entered into the appropriate standard output report; see Sec5-4out.xls included with the accompanying electronic media as specified in Normative Annex A2.

The outputs listed below shall include cumulative or average loads, as specified, for the three-month simulation period: January 1 through March 31. Sections 6.4.1 through 6.4.3 specify the required outputs for each test case.

6.4.1 All Cases HE100 through HE170, HE210 through HE230

6.4.1.1 Cumulative (Total) Energy Delivered to the Space, GJ. In Sec5-4out.xls, this is the Total Furnace Load, which refers to the load at the furnace coil.

6.4.1.2 Cumulative (Total) Energy Delivered to the Furnace, GJ. In Sec5-4out.xls, this is the Total Furnace Input, which refers to the combustion energy of the fuel consumed by the furnace.

6.4.1.3 Average Rate of Fuel Consumption, m^3/s. In Sec5-4out.xls, this is the Fuel Consumption, which corresponds to the ratio of the Total Furnace Input (GJ) (see Section 6.4.1.2) to the fuel HHV (38 MJ/m^3) (see Section 5.4.1.10.5) to the time of the simulation (3 months = 7.776 × 10^6 s) as shown in the following equation:

$$\text{Fuel consumption} = \frac{\text{Furnace input}}{\text{HHV} \times 7.776 \times 10^6} \times 1000$$

6.4.2 Cases with Fan: HE150 through HE170 and HE210 through HE230

6.4.2.1 Cumulative Fan Energy, kWh. Electricity consumed by the draft fan and the circulating fan.

6.4.3 Cases with More Complex Controls: HE210 through HE230

6.4.3.1 Mean Zone Temperature, °C

6.4.3.2 Maximum Zone Temperature, °C

6.4.3.3 Minimum Zone Temperature, °C

6.5 Output Requirements for Air-Side HVAC Equipment Performance Tests of Section 5.5. Outputs that are not direct

Copyrighted material licensed to Sei Ito on 2020-06-26 for licensee's use only. All rights reserved. No further reproduction or distribution is permitted. Distributed by Techstreet for ASHRAE, www.techstreet.com

program outputs shall be described in the output spreadsheet and modeler report using S140outNotes.txt (under report Block B, Alternative Modeling Methods) provided with the accompanying electronic media.

Informative Note: Outputs that are not direct program outputs include spreadsheet and other externally coded post-processor calculations and other manual calculations not performed directly by the program being tested.

6.5.1 Output Requirements for AE100 Series Cases. Output results specified in this section shall be reported in the output spreadsheet ("Sec5-5out.XLSX") provided with the accompanying electronic media, using the nomenclature and units specified here. The simulation shall be run until the final hour output agrees with the previous hour output, and the values specified in Sections 6.5.1.1, 6.5.1.2, and 6.5.1.3 shall be reported for the last hour of the simulation.

6.5.1.1 Zone Load Outputs—Last Hour of Simulation

a. Zone sensible heating load $QZH_{Sensible}$ (kWh/h)
b. Zone sensible cooling load $QZC_{Sensible}$ (kWh/h)
c. Zone latent load QZ_{Latent} (kWh/h)

Zone loads are defined in Section 3.1. All zone loads shall be entered as positive values (≥0). When a zone sensible cooling load occurs, the zone sensible heating load shall be blank or zero; when a zone sensible heating load occurs, the zone sensible cooling load shall be blank or zero.

6.5.1.2 Heating and Cooling-Coil Outputs—Last Hour of Simulation

a. Heating-coil load QH (kWh/h)
b. Cooling-coil sensible load $QC_{Sensible}$ (kWh/h)
c. Cooling-coil latent load QC_{Latent} (kWh/h)
d. Cooling-coil total load $QC_{Total} = QC_{Sensible} + QC_{Latent}$ (kWh/h)
e. Cooling-coil leaving-air relative humidity RH_{cco} (%), as $0\% \le RH_{cco} \le 100\%$

Coil loads are defined in Section 3.1. All coil loads shall be entered as positive values (≥0).

6.5.1.3 Detailed Outputs—Last Hour of Simulation. Provide the dry-bulb temperature (°C), humidity ratio (g/gda), specific volume (L/kgda), enthalpy (J/gda), and mass flow rate (kgda/s) for the following locations as indicated by italicized labels in Figure 5-25:

a. Outdoor air inlet (*oa*)
b. Mixed air (*ma*)
c. Heating-coil outlet (*hco*)
d. Cooling-coil outlet (*cco*)
e. Zone supply air (*sa*)
f. Zone air (*z1*) except mass flow rate
g. Return air (*ra*)

6.5.2 Output Requirements for AE200 Series Cases. Output results specified in this section shall be reported in the output spreadsheet ("Sec5-5out.XLSX") provided with the accompanying electronic media, using the nomenclature and units specified here. The simulation shall be run until the final hour output agrees with the previous hour output, and the values specified in Sections 6.5.2.1, 6.5.2.2, and 6.5.2.3 shall be reported for the last hour of the simulation.

6.5.2.1 Zone Load Outputs—Last Hour of Simulation. The requirements of Section 6.5.1.1 shall be applied.

6.5.2.2 Heating and Cooling-Coil Outputs—Last Hour of Simulation. The requirements of Section 6.5.1.2 shall be applied.

6.5.2.3 Detailed Outputs—Last Hour of Simulation. Provide the dry-bulb temperature (°C), humidity ratio (g/gda), specific volume (L/kgda), enthalpy (J/gda), and mass flow rate (kgda/s) for the following locations as indicated by italicized labels in Figure 5-27:

a. Outdoor air inlet (*oa*)
b. Mixed air (*ma*)
c. Heating-coil outlet (*hco*)
d. Cooling-coil outlet (*cco*)
e. Zone supply air (*sa*)
f. Zone air (*z1*), except mass flow rate
g. Return fan inlet (*rfi*)
h. Return fan outlet (*rfo*)

6.5.3 Output Requirements for AE300 Series Cases. Output results specified in this section shall be reported in the output spreadsheet ("Sec5-5out.XLSX") provided with the accompanying electronic media, using the nomenclature and units specified here. The simulation shall be run until the final hour output agrees with the previous hour output, and the values specified in Sections 6.5.3.1, 6.5.3.2, and 6.5.3.3 shall be reported for the last hour of the simulation.

6.5.3.1 Zone Load Outputs—Last Hour of Simulation

a. Zone 1 sensible heating load $QZH1_{Sensible}$ (kWh/h)
b. Zone 1 sensible cooling load $QZC1_{Sensible}$ (kWh/h)
c. Zone 1 latent load $QZ1_{Latent}$ (kWh/h)
d. Zone 2 sensible heating load $QZH2_{Sensible}$ (kWh/h)
e. Zone 2 sensible cooling load $QZC2_{Sensible}$ (kWh/h)
f. Zone 2 latent load $QZ2_{Latent}$ (kWh/h)

Zone loads are defined in Section 3.1. All zone loads shall be entered as positive values (≥0). When a zone sensible cooling load occurs, the zone sensible heating load shall be blank or zero; when a zone sensible heating load occurs, the zone sensible cooling load shall be blank or zero.

6.5.3.2 Heating and Cooling-Coil Outputs—Last Hour of Simulation

a. Preheat-coil load $QH_{Preheat}$ (kWh/h)
b. Cooling-coil sensible load $QC_{Sensible}$ (kWh/h)
c. Cooling-coil latent load QC_{Latent} (kWh/h)
d. Cooling-coil total load $QC_{Total} = QC_{Sensible} + QC_{Latent}$ (kWh/h)
e. Cooling-coil leaving-air relative humidity RH_{cco} (%), as $0\% \le RH_{cco} \le 100\%$
f. Zone 1 reheat-coil load $QH1_{Reheat}$ (kWh/h)
g. Zone 2 reheat-coil load $QH2_{Reheat}$ (kWh/h)

Coil loads are defined in Section 3.1. All coil loads shall be entered as positive values (≥0).

6.5.3.3 Detailed Outputs—Last Hour of Simulation. Provide the dry-bulb temperature (°C), humidity ratio (g/gda),

Copyrighted material licensed to Sei Ito on 2020-06-26 for licensee's use only. All rights reserved. No further reproduction or distribution is permitted. Distributed by Techstreet for ASHRAE, www.techstreet.com

specific volume (L/kgda), enthalpy (J/gda), and mass flow rate (kgda/s) for the following locations as indicated by italicized labels in Figure 5-28:

a. Outdoor air inlet (*oa*)
b. Mixed air (*ma*)
c. Preheat-coil outlet (*pco*)
d. Cooling-coil outlet (*cco*)
e. System supply air (*sa*)
f. Zone 1 supply air from reheat-coil outlet (*z1s*)
g. Zone 2 supply air from reheat-coil outlet (*z2s*)
h. Zone 1 (*z1*) except mass flow rate
i. Zone 2 (*z2*) except mass flow rate
j. Return fan inlet (*rfi*)
k. Return fan outlet (*rfo*)

6.5.4 Output Requirements for AE400 Series Cases. Output results specified in this section shall be reported in the output spreadsheet ("Sec5-5out.XLSX") provided with the accompanying electronic media, using the nomenclature and units specified here. The simulation shall be run until the final hour output agrees with the previous hour output, and the values specified in Sections 6.5.4.1, 6.5.4.2, and 6.5.4.3 shall be reported for the last hour of the simulation.

6.5.4.1 Zone Load Outputs—Last Hour of Simulation. The requirements of Section 6.5.3.1 shall be applied.

6.5.4.2 Heating and Cooling-Coil Outputs—Last Hour of Simulation. The requirements of Section 6.5.3.2 shall be applied.

6.5.4.3 Detailed Outputs—Last Hour of Simulation. Provide the dry-bulb temperature (°C), humidity ratio (g/gda), specific volume (L/kgda), enthalpy (J/gda), and mass flow rate (kgda/s) for the following locations as indicated by italicized labels in Figure 5-29:

a. Outdoor air inlet (*oa*)
b. Mixed air (*ma*)
c. Preheat-coil outlet (*pco*)
d. Cooling-coil outlet (*cco*)
e. System supply air (*sa*)
f. Zone 1 supply air from VAV terminal reheat-coil outlet (*z1s*)
g. Zone 2 supply air from VAV terminal reheat-coil outlet (*z2s*)
h. Zone 1 (*z1*) except mass flow rate
i. Zone 2 (*z2*) except mass flow rate
j. Return fan inlet (*rfi*)
k. Return fan outlet (*rfo*)

Copyrighted material licensed to Sei Ito on 2020-06-26 for licensee's use only.
All rights reserved. No further reproduction or distribution is permitted. Distributed by Techstreet for ASHRAE, www.techstreet.com

7. CLASS II TEST PROCEDURES

Class II test procedures shall be applied as specified in Section 7.

Informative Note: Class II test procedures may be used for all types of building load calculation methods, regardless of time-step granularity. Informative Annex B22 provides an example procedure for developing statistically based acceptance-range criteria for Section 7 test cases.

Informative Note: Tables and figures referenced in Section 7 are included at the end of the section. The full set of tables follows the full set of figures.

7.1 Modeling Approach. This modeling approach shall apply to all the test cases presented in Section 7.2.

7.1.1 Time Convention. All references to time in this specification are to local standard time and assume that hour 1 = the interval from midnight to 1 A.M. Daylight savings time or holidays shall not be used for scheduling.

Informative Note: TMY weather data are in hourly bins corresponding to solar time as described in Normative Annex A1, Section A1.5.

7.1.2 Geometry Convention. If the program being tested includes the thickness of walls in a three-dimensional definition of the building geometry, then wall, roof, and floor thicknesses shall be defined such that the interior air volume of the building model remains as specified. These thicknesses shall extend exterior to the currently defined internal volume.

7.1.3 Nonapplicable Inputs. In some instances, the specification will include input values that do not apply to the input structure of the program being tested. When this occurs, disregard the nonapplicable inputs and continue.

Informative Note: Selected inputs are included in the test specification for those programs that may need them.

7.1.4 Consistent Modeling Methods. Where options exist within a simulation program for modeling a specific physical behavior, consistent modeling methods shall be used for all cases. The option used shall be documented in the Standard Output Report (as specified in Normative Annex A2).

Informative Note: For example, if the software being tested gives a choice of methods for modeling windows, the same window modeling method is to be applied for all cases.

7.1.5 Equivalent Modeling Methods. Where a program or specific model within a program does not allow direct input of specified values, or where input of specified values causes instabilities in a program's calculations, modelers shall develop equivalent inputs that match the intent of the test specification as nearly as the software being tested allows. Such equivalent inputs shall be developed based on the data provided in the test specification, and such equivalent inputs shall have a mathematical, physical, or logical basis and shall be applied consistently throughout the test cases. The modeler shall document the equivalent modeling method in the Standard Output Report (Normative Annex A2).

7.1.6 Simulation Initialization and Preconditioning. If the program being tested allows, the simulation initialization process shall begin with zone air conditions that equal the outside air conditions. If the program being tested allows for preconditioning (iterative simulation of an initial time period until temperatures or fluxes, or both, stabilize at initial values), that capability shall be used.

7.1.7 Simulation Duration Results for the tests of Section 7.2 shall be taken either from full annual simulations or from seasonal simulations as allowed by the program being tested.

7.1.8 Rules for Modifying Simulation Programs or Simulation Inputs. Modifications to simulation programs or simulation inputs shall have a mathematical, physical, or logical basis and shall be applied consistently across tests. Arbitrary modification of a simulation program's input or internal code just for the purpose of more closely matching a given set of results shall be prohibited.

If changes are made to the source code of the software for the purpose of performing tests, and these changes are not available in publicly released versions of the software, then the changes shall be documented in sufficient detail, using the modeler report template provided in Normative Annex A2, that the implications of the changes are assessable.

7.1.9 Example Acceptance-Range Criteria. Use of informative example acceptance-range criteria provided in Informative Annex B22 shall be permitted but is not mandatory. Where application of the criteria leads to identification of a disagreeing result that requires correction, the rules of Section 7.1.8 for modifying simulation programs or inputs shall be applied.

Informative Note: Example acceptance range criteria are provided for certifying or accrediting agencies that may wish to consider adopting acceptance ranges.

7.2 Input Specifications. The test cases shall be modeled as specified in this section.

Informative Note: The test cases are described in a manner that allows many different residential modeling tools, representing different degrees of modeling complexity, to be tested. Within this structure, figures and tables are grouped as summary data and supplemental data. The summary data, which are based on the supplemental data, are figures and tables that contain information that should cover most of the input requirements for most users. The supplemental tables contain more detailed information that was applied for generating a consistent set of inputs to the programs used to generate example results provided in Informative Annex B20. Such data include material properties for modeling thermal mass and modeling the attic as a separate zone, interior solar distribution fractions, combined convective and radiative surface coefficients, hourly internal gains schedules, and detailed window optical properties. Use the supplemental data as needed according to the inputs allowed by the tool being tested.

Informative Note: Abbreviations used in the tables, figures, and text, are defined in the acronyms and abbreviations of Section 3.

7.2.1 The Base-Case Building (Case L100A). Begin with Case L100A. Case L100A shall be modeled as detailed in this section and its subsections.

Informative Note: The bulk of the work for implementing the Section 7.2 tests is assembling an accurate base-building model. It is recommended that base-building inputs be double-checked and results disagreements be diagnosed before going

Copyrighted material licensed to Sei Ito on 2020-06-26 for licensee's use only.
All rights reserved. No further reproduction or distribution is permitted. Distributed by Techstreet for ASHRAE, www.techstreet.com

on to the other cases. Informative Annex B20 includes example simulation results for the test procedures of Section 7.

7.2.1.1 Weather Data. This case requires the use of both the Colorad.TMY and Lasvega.TMY weather data provided in the electronic media accompanying this standard, as specified in Normative Annex A1, Section A1.4. Colorad.TMY (a clear, cold climate) shall be used for developing heating loads, and Lasvega.TMY (a hot, dry climate) shall be used for developing cooling loads. If the program being tested uses a different representation of weather, such as degree days, bin method, or other representation, then the above weather data shall be processed with the tested program's weather data processor so that the tested program's output will be based on the above data.

Informative Note: All of the Section 7 tests use the same weather data, except that the following cases do not require the use of the Lasvega.TMY data: L302A, L304A, L322A, L324A, P100A, P105A, P110A, P140A and P150A.

7.2.1.1.1 Ground Reflectance. The solar reflectance of the site ground surface = 0.2.

7.2.1.2 Output Requirements. Case L100A requires the following:

a. General reporting requirements of Section 8.1.
b. Annual or seasonal heating load and sensible cooling load output as specified in Section 8.2.1.

Informative Note: All of the Tier 1 tests (defined in Sections 7.2.1 and 7.2.2) have the same output requirements except for Cases L302A, L304A, L322A, and L324A.

7.2.1.3 Building Geometry and Material Properties. The base-building plan shall be a 1539 ft^2 floor area, single-story house with one conditioned zone (the main floor), an unconditioned attic, and a raised floor exposed to air. The building model shall apply information in the following figures and tables as required by the program being tested:

- Figure 7-1 Base-Building Axonometric
- Figure 7-2 Floor Plan—Case L100A
- Figure 7-3 East-Side Elevation—Case L100A
- Figure 7-4 Exterior Wall Plan Section—Case L100A
- Figure 7-5 Raised Floor Exposed to Air, Section—Case L100A
- Figure 7-6 Ceiling/Attic/Roof Section—Case L100A
- Figure 7-7 Interior Wall Plan Section—Case L100A
- Figure 7-8 Window Detail, Vertical Slider (NFRC AA) with 2-3/4 in. Wide Frame—Case L100A
- Table 7-1 Building Thermal Summary—Case L100A
- Table 7-2 Other Building Details—Case L100A

For models requiring more detailed information, the supplementary information in the following tables shall be applied as required by the program being tested:

- Table 7-3 Component Surface Areas and Solar Fractions—Case L100A
- Table 7-4 Material Descriptions, Exterior Wall, Door, and Window—Case L100A
- Table 7-5 Material Descriptions, Raised Floor Exposed to Air—Case L100A
- Table 7-6 Material Descriptions, Ceiling, Attic, and Roof—Case L100A
- Table 7-7 Material Descriptions, Ceiling/Attic/Roof, Attic as Material Layer—Case L100A (for calculating equivalent ceiling/attic/roof composite R-value)
- Table 7-8 Material Descriptions, Interior Wall—Case L100A
- Table 7-9 Internal Loads Schedule—Case L100A
- Table 7-10 Window Summary, Single-Pane Aluminum Frame with Thermal Break—Case L100A
- Table 7-11 Glazing Summary, Single-Pane Center-of-Glass (COG) Values—Case L100A
- Table 7-12 Optical Properties as a Function of Incidence Angle for Single-Pane Glazing—Case L100A

Other details not described in these figures and tables shall be modeled as specified topically in the following subsections.

7.2.1.4 Attic. For energy analysis tools that input an attic by specifying it within a menu of roof types and then specify the insulation-only R-value corresponding to the insulation installed on the attic floor, the information in Figure 7-6 shall be used.

For programs that apply more detailed modeling, the attic shall be modeled as a separate zone using information provided in Table 7-6, or as a layer of thermal resistance between ceiling and roof materials using information provided in Table 7-7.

As with other components, except where explicitly varied by the test specification, the attic shall be modeled consistently for all test cases such that the modeling rules of Section 7.1 are applied.

Informative Note: Table 7-7 documents the calculation of ceiling/attic/roof composite air-air R-value noted in the building thermal summary of Table 7-1. In Table 7-7, the equivalent resistance for the attic is based on values from the *Cooling and Heating Load Calculation Manual* [B-23]; typical ventilation by natural effects and roof solar absorptance of 0.6 were assumed. The equivalence of the one-zone model versus the two-zone base case was verified with sensitivity tests using BLAST and SERIRES/SUNCODE [B-12, B-24].

7.2.1.5 Raised Floor Exposed to Air. The floor shall be modeled as follows:

- The air temperature below the raised floor shall be equal to the outside air temperature.
- The underside of the conditioned-zone floor shall have an exterior film coefficient of 2.2 Btu/(h·ft^2·°F), consistent with a rough surface texture and zero windspeed. If the program being tested is not capable of setting the exterior surface coefficient to a fixed value, the exterior surface coefficient shall be permitted to vary with wind speed.
- The conditioned-zone floor exterior surface (surface facing downward) shall receive no solar radiation.

Informative Note: The assumption that the air temperature below the raised floor is equal to ambient temperature may be approximated either by modeling a building that is hovering ten feet or more above the ground (a raised floor on stilts for example) or by modeling a very highly ventilated crawl space.

Copyrighted material licensed to Sei Ito on 2020-06-26 for licensee's use only. All rights reserved. No further reproduction or distribution is permitted. Distributed by Techstreet for ASHRAE, www.techstreet.com

The zero-solar-radiation-to-exterior-floor assumption can be modeled by assigning the highest solar reflectance allowed by the software being tested to the underside of the floor and/or by defining shading planes where walls would be if the raised floor were modeled as a crawl space.

7.2.1.6 Interior Walls. The thermal mass of the interior walls within the conditioned zone shall be modeled if the program being tested has that capability.

Informative Note: The interior walls are not intended to divide the conditioned zone into separately controlled zones.

7.2.1.7 Infiltration. The infiltration rates specified in Table 7-2 shall be used. The Colorad.TMY and Lasvega.TMY climate sites are at 6145 and 2178 ft altitude, respectively. If the program being tested does not use barometric pressure from the weather data, or otherwise does not automatically correct for the change in air density caused by altitude, then the specified infiltration rates shall be adjusted to yield sea-level mass flow rates equivalent to those occurring at the specified altitude as shown in Table 7-2. The infiltration rate shall be independent of wind speed, indoor/outdoor temperature difference, or other variables. The attic infiltration rate shall be used if the software being tested allows that input.

Informative Note: Attic infiltration is based on the *Cooling and Heating Load Calculation Manual* [B-23] for typical ventilation by natural effects.

Informative Note: The density of air is less than that at sea level for both climate locations. The calculation technique used for developing altitude effects on infiltration is included in Informative Annex B3.

7.2.1.8 Internal Loads. The hourly internal sensible and latent load schedules for the conditioned zone specified in Table 7-9 shall be used. There shall be no internal loads in the attic. If the software being tested does not analyze latent loads, only the sensible portion of the internal loads shall be modeled and the latent loads shall be ignored.

Aggregate sensible loads shall be 70% radiative and 30% convective.

Informative Note: Internal loads are non-HVAC-related internally generated loads from equipment, lights, people, animals, etc. Because internal loads are given only for their effect on heating and cooling loads, the equipment fuel type and efficiency associated with generating these loads do not matter.

7.2.1.9 Combined Radiative and Convective Surface Coefficients. If the program being tested does not allow variation of combined surface coefficients, or if it automatically calculates interior and exterior surface convection and radiation, skip the instructions in this section and proceed to Section 7.2.1.10.

If the program being tested uses combined surface coefficient inputs, the information given in Table 7-2 shall be used.

Informative Note: This information is also included with the detailed material descriptions of Tables 7-4 through 7-8, 7-10, and 7-11. Because the heating season average windspeed for Colorad.TMY weather data is nearly equal to the cooling season average windspeed for Lasvega.TMY data, the listed exterior surface coefficients apply to both climates. See Informative Annexes B4 and B5 for more information on surface coefficients.

Informative Note: Combined surface coefficients are denoted in various section drawings throughout Section 7.2 as "Interior Film" and "Exterior Film" (e.g., see Figures 7-4 through 7-7).

7.2.1.10 Opaque Surface Radiative Properties. Surface radiative properties given in Table 7-2 shall be used. These properties shall apply to all opaque exterior and interior building surfaces.

Informative Note: The radiative properties in Table 7-2 are roughly equivalent to medium-color paint or a light-color roof.

7.2.1.11 Windows. The basic properties of the single-pane window, including shading coefficient, solar heat gain coefficient, and thermal resistance, are provided in Table 7-1 and shall be used as required by the software being tested. Additional information included in Figure 7-8, Table 7-4, and Tables 7-10 through 7-12 shall be used as required by the software being tested. For programs that need transmittance or reflectance at other angles of incidence, interpolation between the values of Table 7-12, using the cosine of the incidence angle as the basis of interpolation, shall be permitted. Where unspecified equivalent inputs are needed, values that are consistent with those specified shall be applied according to the instructions of Section 7.1.5.

For the base case, it shall be permitted to model the total glass area for each wall as a single large glass area for each wall, and similarly to model the total window frame area for each wall as a single large window frame area for each wall. For later cases where shading is used, the specific window geometry shall be modeled as closely as the software being tested allows.

Informative Note: Extensive information about the window properties has been provided so that equivalent input for windows is possible for many programs. Only the information that is relevant to the program being tested is intended to be applied. Window information is drawn primarily from the WINDOW 4.1 software [B-25] for developing detailed glazing properties.

7.2.1.12 Interior Solar Distribution. If the program being tested does not allow for variations of interior solar distribution, skip this section and proceed to Section 7.2.1.13. If the program being tested does not calculate this effect internally, the interior solar fractions from Table 7-3 shall be used.

Informative Note: Interior solar distribution is the fraction of transmitted solar radiation incident on specific surfaces in a room. The calculation of transmitted solar radiation reflected back out through windows (cavity albedo) is presented in Informative Annex B7, Section B7.2.

7.2.1.13 Mechanical System. This mechanical system shall apply only to the conditioned zone; it shall not apply to the unconditioned attic. All equipment shall be 100% efficient with no duct losses and no capacity limitations. The mechanical system shall be modeled with the following features as noted below and in Sections 7.2.1.14 and 7.2.1.15:

- 100% convective air system.

Copyrighted material licensed to Sei Ito on 2020-06-26 for licensee's use only. All rights reserved. No further reproduction or distribution is permitted. Distributed by Techstreet for ASHRAE, www.techstreet.com

- The thermostat senses only the air temperature.
- Nonproportional type thermostat (as specified in Section 7.2.1.14).
- No latent heat extraction.

Informative Note: The intent of the mechanical system is to produce only pure heating-load and sensible-cooling-load outputs.

7.2.1.14 Thermostat Control Strategies

7.2.1.14.1 The annual thermostat control settings shown below shall be used. Heating and cooling seasons shall be for either the entire year or some other duration as designated by the program being tested. Two separate simulations are required, one for calculating heating loads and the other for calculating cooling loads.

For Colorad.TMY weather data (heating only)

- HEAT = ON IF TEMP < 68F; COOL = OFF

For Lasvega.TMY weather data (cooling only):

- COOL = ON IF TEMP > 78°F; HEAT = OFF

Informative Note: "TEMP" refers to conditioned zone air temperature.

7.2.1.14.2 The thermostat is nonproportional.

Informative Note: A nonproportional thermostat operates such that when the conditioned-zone air temperature exceeds the thermostat cooling set point, the heat extraction rate is assumed to equal the maximum capacity of the cooling equipment. Likewise, when the conditioned-zone air temperature drops below the thermostat heating set point, the heat addition rate equals the maximum capacity of the heating equipment. A proportional thermostat throttles the heat addition rate (or extraction rate) in proportion to the difference between the zone set point temperature and the actual zone temperature. If the program being tested requires the use of a proportional thermostat, a proportional thermostat model can be made to approximate a nonproportional thermostat model by setting a very small throttling range (the minimum allowed by the program being tested).

7.2.1.15 Equipment Characteristics. The following inputs shall be used:

- Heating capacity = 3.413 million Btu/h (effectively infinite)
- Effective efficiency = 100%
- Cooling capacity = 3.413 million Btu/h (effectively infinite)
- Effective efficiency = 100%
- Sensible cooling only; no latent heat-load calculation
- Waste heat from fan = 0

If the software being tested does not allow the specified capacity, the largest system that the software being tested will allow shall be used.

Equipment efficiency shall always be modeled as 100% independent of part loading, indoor dry-bulb temperature and humidity ratio, outdoor dry-bulb temperature and humidity ratio, and/or other conditions.

Informative Note: The 3.413 million Btu/h requirement comes from the I-P units equivalent of 1 MW.

7.2.2 Tier 1 Test Cases. The Tier 1 test cases shall be modeled exactly as the designated base-case model with revisions as specified in this section. The designated base-case model shall be Case L100A except for the following:

Case	Basis for Case
L155A	L150A
L202A	L200A
L304A	L302A
L324A	L322A

Informative Note: For convenience, relevant portions of the appropriate base-building tables and figures have been reprinted, with changes for a given case highlighted in bold. Where applicable, summary figures and tables are listed first, with supplementary detailed tables listed afterward.

7.2.2.1 Case L110A: High Infiltration (1.5 ACH). Case L110A shall be modeled **exactly as Case L100A except** that infiltration for the conditioned zone shall be changed as shown in Table 7-13. The attic infiltration rate shall remain unchanged.

The Colorad.TMY and Lasvega.TMY climate sites are at 6145 and 2178 ft altitude, respectively. If the program being tested does not use barometric pressure from the weather data, or otherwise does not automatically correct for the change in air density caused by altitude, then the specified infiltration rates shall be adjusted to yield sea-level mass flow rates equivalent to those occurring at the specified altitude as shown in Table 7-13. The infiltration rate shall be independent of wind speed, indoor/outdoor temperature difference, and other variables.

Informative Note: The density of air is less than that at sea level for both climate locations. The calculation technique used for developing altitude effects on infiltration is included in Informative Annex B3.

7.2.2.2 Case L120A: Well-Insulated Walls and Roof. Case L120A shall be modeled **exactly as Case L100A except** that an extra layer of R-38 batt insulation shall be added to the ceiling, and exterior walls shall have 2×6 24 in. O.C. framing and R-18 batt insulation with R-7.2 polyisocyanurate exterior board insulation. Changes to Case L100A for developing Case L200A shall apply information highlighted in bold in the following figures and be consistent with information highlighted in bold in the following table as required by the program being tested.

- Figure 7-9 Exterior Wall Plan Section—Case L120A
- Figure 7-10 Ceiling Section—Case L120A
- Table 7-14 Building Thermal Summary—Case L120A

Models requiring more detailed information shall apply the information highlighted in bold in the following supplementary tables as required by the program being tested:

- Table 7-15 Component Surface Areas and Solar Fractions—Case L120A
- Table 7-16 Material Descriptions, Exterior Wall—Case L120A
- Table 7-17 Material Descriptions, Ceiling—Case L120A

Copyrighted material licensed to Sei Ito on 2020-06-26 for licensee's use only. All rights reserved. No further reproduction or distribution is permitted. Distributed by Techstreet for ASHRAE, www.techstreet.com

- Table 7-18 Material Descriptions for Attic as Material Layer—Case L120A

Informative Note: For calculation of equivalent ceiling/attic/roof composite R-value in Table 7-18, see the discussion of the base-building attic in the informative note at the end of Section 7.2.1.4.

Informative Note: Information in the tables and figures not highlighted in bold is copied from Case L100A.

7.2.2.3 Case L130A: Double-Pane Low-Emissivity Window with Wood Frame. Case L130A shall be modeled **exactly as Case L100A except** that all single-pane windows shall be replaced with double-pane low-emissivity (low-e) windows with wood frames and insulated spacers. The basic properties of the window, including shading coefficient, solar heat gain coefficient, and thermal resistance (indicated by bold highlighting in the following table) shall be used as required by the program being tested:

- Table 7-19 Building Thermal Summary—Case L130A

Window and frame geometry remain as for Case L100A.

Models requiring more detailed information shall apply the supplementary information in the following tables as required by the program being tested:

- Table 7-20 Window Summary (Double-Pane, Low-E, Argon Fill, Wood Frame, Insulated Spacer)—Case L130A
- Table 7-21 Glazing Summary, Low-E Glazing System with Argon Gas Fill (Center-of-Glass [COG] Values)—Case L130A
- Table 7-22 Optical Properties as a Function of Incidence Angle for Low-Emissivity Double-Pane Glazing—Case L130A
- Table 7-23 Component Solar Fractions—Case L130A

Informative Note: Because of the large number of changes to the glazing for this case, Tables 7-20 through 7-22 do *not* use bold highlighting to show where changes occurred. Information in Tables 7-19 and 7-23 not highlighted in bold is copied from Case L100A.

Informative Note: Only the information that is relevant to the program being tested is intended to be applied. Window properties are drawn from the WINDOW 4.1 [B-25] software for window thermal analysis.

7.2.2.3.1 For programs that need transmittance or reflectance at other angles of incidence, interpolation between the values of Table 7-22 using the cosine of the incidence angle as the basis of interpolation shall be permitted.

7.2.2.3.2 Where unspecified equivalent inputs are needed, values that are consistent with those specified shall be applied according to the instructions of Section 7.1.5.

7.2.2.3.3 For programs requiring the input of internal solar distribution, the values highlighted in bold in Table 7-23 shall be used as required by the software being tested.

Informative Note: There is a slight change in interior surface solar distribution caused by reduced solar lost (cavity albedo).

7.2.2.4 Case L140A: Zero Window Area. Case L140A shall be modeled **exactly as Case L100A except** that the gross window area (glass and frame) shall be replaced with the Case L100A solid exterior wall materials of Figure 7-4 and Table 7-4 as specified in Section 7.2.1.3. Changes to the Case L100A model area and thermal parameters for developing Case L140A shall be consistent with the information highlighted in bold in the following tables:

- Table 7-24 Building Thermal Summary—Case L140A
- Table 7-25 Component Surface Areas—Case L140A

Informative Note: Information in the tables not highlighted in bold is copied from Case L100A.

7.2.2.5 Case L150A: South-Oriented Windows. This case shall be modeled **exactly as Case L100A except** that all windows shall be moved to the south wall.

Changes to Case L100A for developing Case L150A shall apply the following figures and shall be consistent with the information highlighted in bold in the following tables as required by the program being tested:

- Figure 7-11 Exterior Wall and South Window Locations—Case L150A
- Figure 7-12 South Wall Elevation—Case L150A
- Table 7-26 Building Thermal Summary—Case L150A
- Table 7-27 Surface Component Areas and Solar Fractions—Case L150A

Informative Note: Information in the tables not highlighted in bold is copied from Case L100A. The figures contain only new information; changes are not highlighted in bold in the figures.

7.2.2.5.1 Interior Solar Distribution. If the program being tested does not allow for variations of interior solar distribution, skip this section. If the program being tested does not calculate this effect internally, the interior solar fractions from Table 7-27 shall be used.

Informative Note: Interior solar distribution is the fraction of transmitted solar radiation incident on specific surfaces in a room. The calculation of transmitted solar radiation reflected back out through windows (cavity albedo) is presented in Informative Annex B7, Section B7.2.

7.2.2.6 Case L155A: South-Oriented Windows with Overhang. Case L155A shall be modeled **exactly as Case L150A except** that an opaque overhang shall be included at the top of the south exterior wall. The overhang shall extend outward from this wall 2.5 ft as shown in Figure 7-13. The overhang shall traverse the entire length of the south wall.

If the input capabilities of the software being tested do not allow the exact geometry of the windows and overhang to be modeled as shown in Figure 7-13, a simplified model of the south wall shall be permitted.

Informative Note: Informative Figure 7-14 shows one possible simplified model. Glass and horizontally oriented framing directly above and below the glass are aggregated into long units, with all elements located properly in the vertical direction to obtain the nearly equivalent shading of Figure 7-13. Proper dimensions for this example are obtained using Figure 7-8 (Case L100A), Figure 7-13, and Table 7-27 (Case L150A). The vertically oriented framing is similarly aggregated in a separate area so that equivalent shading will also result. While the overhang is not shown in Figure 7-14, it is included as shown in Figure 7-13.

Copyrighted material licensed to Sei Ito on 2020-06-26 for licensee's use only. All rights reserved. No further reproduction or distribution is permitted. Distributed by Techstreet for ASHRAE, www.techstreet.com

7.2.2.7 Case L160A: East- and West-Oriented Windows. This case shall be modeled **exactly as Case L100A except** that all windows shall be moved to the east and west walls. Changes to Case L100A for developing Case L150A shall apply the following figures and shall be consistent with information highlighted in bold in the following tables as required by the program being tested:

- Figure 7-15 East and West Window Locations, Plan—Case L160A
- Figure 7-16 East/West Wall Elevation—Case L160A
- Table 7-28 Building Thermal Summary—Case L160A
- Table 7-29 Surface Component Areas and Solar Fractions—Case L160A

Informative Note: Information in the tables not highlighted in bold is copied from Case L100A. The figures contain only new information; changes are not highlighted in bold in the figures.

7.2.2.8 Case L170A: No Internal Loads. Case L170A shall be modeled **exactly as Case L100A, except** the internal sensible and latent loads in the conditioned zone shall be zero for all hours of the entire year.

7.2.2.9 Case L200A: Energy Inefficient. This case shall be modeled **exactly as Case L100A except** for the following changes:

- Infiltration for the conditioned zone shall be 1.5 ach as in Case L110A.
- Exterior wall fiberglass insulation shall be replaced with an air gap.
- Floor fiberglass insulation shall be eliminated.
- Ceiling fiberglass insulation shall be reduced from 5.5 to 3.5 in.

Changes to Case L100A for developing Case L200A shall apply information highlighted in bold in the following figures and tables as required by the program being tested:

- Figure 7-17 Exterior Wall Plan Section—Case L200A
- Figure 7-18 Raised Floor Exposed to Air, Section—Case L200A
- Figure 7-19 Ceiling Section—Case L200A
- Table 7-30 Building Thermal Summary—Case L200A

Changes shall also apply information from the following table as required by the program being tested:

- Table 7-13 Conditioned Zone Infiltration for Case L110A (as specified in Section 7.2.2.1)

Models requiring more detailed information shall apply the information highlighted in bold in the following supplementary tables as required by the program being tested:

- Table 7-31 Material Descriptions, Exterior Wall—Case L200A
- Table 7-32 Material Descriptions, Raised Floor Exposed to Air—Case L200A
- Table 7-33 Material Descriptions, Ceiling—Case L200A
- Table 7-34 Material Descriptions, Ceiling with Attic as Material Layer—Case L200A

Informative Note: For calculation of equivalent ceiling/attic/roof composite R-value, see discussion of the base-building attic in Section 7.2.1.4.

Informative Note: Information in the tables and figures not highlighted in bold is copied from Case L100A. Table 7-13 contains only new information relevant to infiltration; changes are not highlighted in bold.

7.2.2.10 Case L202A: Low Exterior Solar Absorptance Associated with Light-Exterior Surface Color. This case shall be modeled **exactly as Case L200A except** that exterior shortwave (visible and UV) absorptance α_{ext} shall be 0.2 for the following opaque exterior surfaces exposed to solar radiation:

- Exterior walls
- Roof
- End gables
- Doors

Window frames shall remain at $\alpha_{ext} = 0.6$.

7.2.2.11 Slab-on-Grade Series (Cases L302A and L304A). The slab-on-grade test cases shall be modeled as specified in this section. Case L100A shall be the base case for Case L302A. Case L302A shall be the base case for Case L304A.

Informative Note: Cases L302A and L304A are designed to compare the results of residential modeling software to example results of Informative Annex B20 using the steady-state ASHRAE perimeter method for modeling slab-on-grade heat loss [B-26, B-27]. This is a simplified method for ground-coupling analysis. For Cases L302A and L304A, the ASHRAE perimeter method assumes heat loss occurs along the entire 168 ft of full-slab perimeter. In both cases, an R-2.08 $h \cdot ft^2 \cdot °F/Btu$ carpet with pad is present at the interior surface of the slab. It is understood that an analysis tool could use a more detailed model for slab-on-grade ground coupling, which could have a significant effect on the output. Therefore, results of alternative (somewhat more detailed) ground-coupling analysis are included for these cases as part of the example results of Informative Annex B20. This serves to widen the range of example results for the slab-on-grade cases. Case descriptions for the alternative ground-coupling analysis are given in Informative Annex B18, where Cases L302B and L304B are the alternative versions of cases L302A and L304A, respectively.

7.2.2.11.1 Case L302A: Slab-on-Grade, Uninsulated ASHRAE Slab. This case shall be modeled **exactly as Case L100A except** for the following changes to output requirements and floor construction.

7.2.2.11.1.1 Output Requirements. Cases L302A and L304A require the following output:

a. General reporting requirements of Section 8.1
b. Annual or seasonal heating loads for Colorad.TMY data as specified in Section 8.2.1

7.2.2.11.1.2 Floor Construction. The raised-floor-exposed-to-air construction shall be changed to an uninsulated slab-on-grade construction. Changes to Case L100A for developing Case L302A shall apply information in the following figure and shall be consistent with bold-highlighted

Copyrighted material licensed to Sei Ito on 2020-06-26 for licensee's use only. All rights reserved. No further reproduction or distribution is permitted. Distributed by Techstreet for ASHRAE, www.techstreet.com

information in the following table as required by the program being tested:

- Figure 7-20 Uninsulated Slab-on-Grade Section—Case L302A
- Table 7-35 Building Thermal Summary—Case L302A

Models requiring more detailed information shall apply the information in the following supplementary table as required by the program being tested:

- Table 7-36 Material Descriptions, Slab-on-Grade Floor—Case L302A

Informative Note: Figure 7-20 contains only new information; changes are not bold highlighted. Information in Table 7-35 not highlighted in bold is copied from Case L100A. Table 7-36 contains only new information relevant to slab floor construction; changes are *not* highlighted in bold. Table 7-36 shows equivalent inputs for modeling the ASHRAE perimeter method with the software used to generate example results of Informative Annex B20. This includes carpet on the interior surface of the slab.

7.2.2.11.2 Case L304A: Slab-on-Grade, Insulated ASHRAE Slab. This case shall be modeled **exactly as Case L302A except** that the slab shall be insulated with R-5.4 (h·ft^2·°F)/Btu perimeter insulation. Changes to Case L302A for developing Case L304A shall apply information highlighted in bold in the following figure and shall be consistent with information highlighted in bold in the following table as required by the program being tested:

- Figure 7-21 Slab-on-Grade with Foundation Wall Exterior Insulation, Section—Case L304A
- Table 7-37 Building Thermal Summary—Case L304A

Models requiring more detailed information shall apply the information highlighted in bold in the following supplementary table as required by the program being tested:

- Table 7-38 Material Descriptions, Slab-on-Grade Floor—Case L304A

Informative Note: Table 7-38 shows equivalent inputs for modeling the ASHRAE perimeter method with the software used to generate example results of Informative Annex B20.

Informative Note: Information in the figures and tables not highlighted in bold is copied from Case L302A.

7.2.2.12 Basement Series (Cases L322A and L324A). The basement test cases shall be modeled as specified in this section. Case L100A shall be the base case for Case L322A. Case L322A shall be the base case for Case L324A.

Informative Note: Cases L322A and L324A are designed to compare the results of residential modeling software to software used to generate example results of Informative Annex B20, using the ASHRAE method for modeling basement heat loss from the below-grade basement walls and slab floor [B-26, B-27, B-28]. It is understood that an analysis tool could use a more detailed model for basement ground coupling, which could have a significant effect on the output. Therefore, results of alternative (somewhat more detailed) ground-coupling analysis are included for these cases as part of the example results of Informative Annex B20. This serves to widen the range of example results for the basement cases. Case descriptions for the alternative ground-coupling analysis are given in Informative Annex B18, where Cases L322B and L324B are the alternative versions of Cases L322A and L324A, respectively.

7.2.2.12.1 Case L322A: Uninsulated ASHRAE Conditioned Basement. Case L322A shall be modeled **exactly as Case L100A except** for the following changes.

Informative Note: Because this case contains numerous changes to the base building (Case L100A), Section 7.2.2.12.1.4 defining the input procedure is included in this section.

7.2.2.12.1.1 Output Requirements. Cases L322A and L324A require the following output:

a. General reporting requirements of Section 8.1
b. Annual or seasonal heating loads using Colorad.TMY data as specified in Section 8.2.1.

7.2.2.12.1.2 Conditioned Basement Construction. A conditioned basement shall be added with the following envelope and interior floor modifications:

- Add basement walls.
- Add concrete basement floor slab.
- Replace the previous raised floor exposed to air with an interior main floor/basement ceiling.

Changes to Case L100A for developing Case L322A shall apply information in the following figures and shall be consistent with information highlighted in bold in the following table as required by the program being tested:

- Figure 7-22 Basement Series Base Building, Section and Plan
- Figure 7-23 Basement Wall and Floor Section—Case L322A
- Figure 7-18 Raised Floor Exposed to Air—Case L200A (with change per input procedure as specified in Section 7.2.2.12.1.4[d])
- Table 7-39 Building Thermal Summary—Case L322A

Models requiring more detailed information shall apply the information in the following supplementary tables as required by the program being tested.

- Table 7-40 Basement Component Surface Areas—Case L322A
- Table 7-41 Material Descriptions, Basement Wall—Case L322A
- Table 7-42 Material Descriptions, Basement Floor—Case L322A
- Table 7-43 Material Descriptions, Interior Main Floor/Basement Ceiling—Case L322A

Informative Note: Figures 7-22 and 7-23 and Tables 7-40 through 7-43 contain all new information; changes are not highlighted in bold. Information in Table 7-39 not highlighted in bold is copied from Case L302A.

7.2.2.12.1.3 Thermostat Control and Related Modeling Notes. Basement air temperature shall be regulated by the same thermostat control as the main floor (as specified for

Copyrighted material licensed to Sei Ito on 2020-06-26 for licensee's use only. All rights reserved. No further reproduction or distribution is permitted. Distributed by Techstreet for ASHRAE, www.techstreet.com

Case L100A in Section 7.2.1.14), and main floor and basement air shall be assumed to be well mixed. The entire house (main floor and basement) shall be modeled as a single zone, or modeled as two zones with the main floor and basement as separate zones adjacent to each other with identical thermostat control. In a single-zone model, the main floor/basement ceiling shall be treated like the main-floor interior walls. In a two-zone model, the main floor/basement ceiling shall be a partition between the main floor and the basement zones.

7.2.2.12.1.4 Input Procedure. To develop inputs for Case L322A, begin with Case L100A and proceed as follows:

a. A basement shall be added with 1539 ft^2 of floor area and 12312 ft^3 of air volume directly below the original conditioned zone as shown in Figure 7-22. The basement wall height shall be 8 ft as shown in Figures 7-22 and 7-23. Basement envelope and ceiling component surface areas shall be shown in Table 7-39. Models requiring more detailed information shall apply supplemental data in Table 7-40 as required by the program being tested. Thermostat control shall be as specified in Section 7.2.1.14 above. No additional infiltration through the basement envelope shall be assumed (i.e., the sill is caulked). No additional internal gains shall be present in the basement. ***Informative Note:*** If a two-zone model is applied, internal gains and infiltration are applied to the main floor only.
b. The basement walls shall be as shown in Figure 7-23 and Table 7-39. Models requiring more detailed information shall apply the supplementary information in Tables 7-40 and 7-41 as required by the program being tested. The walls shall include a rim-joist section as well as above- and below-grade concrete wall sections. The basement wall construction shall be the same for all four basement walls. No windows shall be included in the basement.
c. The basement floor shall be as shown in Figures 7-22 and 7-23 and Table 7-39. Models requiring more detailed information shall apply the supplemental information in Tables 7-40 and 7-42 as required by the program being tested.
d. The base-case main floor (formerly raised floor exposed to air) shall be replaced with the interior main floor/basement ceiling of Table 7-39. Models requiring more detailed information shall apply the supplemental information in Tables 7-40 and 7-43 as required by the program being tested. This floor shall be based on Figure 7-18 (Case L200A) except that the exterior film below the floor shall be replaced by an interior film.

7.2.2.12.2 Case L324A: Interior Insulation Applied to Uninsulated ASHRAE Conditioned Basement Wall. This case shall be modeled **exactly as Case L322A except** that insulation shall be added to the interior side of the basement wall and rim joist. The basement floor slab shall remain as in Case L322A.

Changes to Case L322A for developing Case L324A shall apply information highlighted in bold in the following figures and shall be consistent with information highlighted in bold in the following table as required by the program being tested:

- Figure 7-24 Insulated Basement Wall and Rim Joist Section—Case L324A
- Figure 7-25 Insulated Basement Wall Plan Section—Case L324A
- Table 7-44 Building Thermal Summary—Case L324A

Models requiring more detailed information shall apply the information highlighted in bold in the following supplementary tables as required by the program being tested:

- Table 7-45 Component Surface Areas—Case L324A
- Table 7-46 Material Descriptions, Basement Wall—Case L324A

Informative Note: Information in the figures and tables not highlighted in bold is copied from Case L322A.

7.2.3 Tier 2 Test Cases. Tier 2 test cases shall be modeled exactly as the designated base-case model except as specified in this section. Case L165A shall be based on Tier 1 Case L160A, and Case P100A shall be based on Tier 1 Case L120A. Case P100A shall be the base case for Cases P105A, P110A, P140A, and P150A.

Informative Note: Bold font in tables and figures for the Tier 2 cases denotes changes with respect to their appropriate base cases. Where applicable, summary figures and tables are listed first, with supplementary detailed tables listed afterward.

7.2.3.1 Case L165A: East/West Shaded Windows. Case L165A shall be modeled **exactly as Case L160A except** that an opaque overhang and ten opaque fins shall be added to the east and west walls as shown in Figure 7-26.

If the input capabilities of the software being tested do not allow the exact geometry of the windows and shading devices to be modeled as shown in Figure 7-26, a nearly equivalent model of the shading devices shall be permitted.

Informative Note: Informative Figure 7-27 shows one possible simplified model. The ten fins shown in Figure 7-26 have been replaced with two large fins. It may also be necessary to modify the window geometry. This type of modification process was also presented with Figure 7-14 for Case L155A.

7.2.3.2 Case P100A: Passive Solar Base Case (Unshaded). Case P100A shall be the base case for the passive solar series (P-series) cases.

Case P100A shall be **based on Case L120A**, with modifications, as specified below.

Because of the many changes in this case versus Case L120A, it is recommended that inputs for Case P100A be double checked and results disagreements diagnosed before running the remainder of the P-series cases. An input procedure for developing Case P100A from Case L120A is included in Section 7.2.3.2.8.

Informative Note: This case is representative of passive-solar heating design. However, for the passive-solar base case, a south wall overhang was not included. To prevent summer overheating, good passive-solar design would include an overhang as described in Case P105A.

7.2.3.2.1 Weather Data and Output Requirements. The P-series cases require the following output:

a. General reporting requirements of Section 8.1.

Copyrighted material licensed to Sei Ito on 2020-06-26 for licensee's use only. All rights reserved. No further reproduction or distribution is permitted. Distributed by Techstreet for ASHRAE, www.techstreet.com

b. Annual or seasonal heating and sensible cooling load outputs for only the Colorad.TMY weather data as specified in Section 8.2.2. Two separate simulations are required: one for calculating heating loads and the other for calculating cooling loads.

Informative Note: The need for two simulations is discussed in the informative note of Section 7.2.3.2.4.

7.2.3.2.2 Construction Details. The building model shall be modeled as follows:

- All south window orientation with increased glass area.
- Clear double-pane window with wood frame and modified geometry.
- R-23 composite floor with brick pavers for thermal mass.
- Three of the 14 ft lightweight interior walls shall be replaced with three 14 ft double brick walls for thermal mass.

Changes to Case L120A for developing Case P100A shall apply information in the following figures, including information highlighted in bold in Figure 7-29, and shall be consistent with information highlighted in bold in Table 7-47 as required by the program being tested:

- Figure 7-28 Window, Door, and Mass Wall Locations—Case P100A
- Figure 7-29 Mass Raised Floor Exposed to Air, Section—Case P100A
- Figure 7-30 Interior Mass Wall Section—Case P100A
- Figure 7-31 Window Detail, Vertical Slider 30 in. Wide by 78 in. High with 2 3/4 in. Frame—Case P100A
- Table 7-47 Building Thermal Summary—Case P100A

Models requiring more detailed information shall apply the information in the following supplementary tables, including the information highlighted in bold in Tables 7-48 through 7-50, as required by the program being tested:

- Table 7-48 Component Surface Areas and Solar Fractions—Case P100A
- Table 7-49 Material Descriptions, Raised Floor Exposed to Air—Case P100A
- Table 7-50 Material Descriptions, Interior Mass Wall—Case P100A
- Table 7-51 Window Summary, Double-Pane, Clear, Wood-Frame Window—Case P100A
- Table 7-52 Glazing Summary, Clear Double-Pane Center-of-Glass [COG] Values—Case P100A
- Table 7-53 Optical Properties as a Function of Incidence Angle for Clear Double-Pane Glazing—Case P100A

The exterior wall materials of Case L120A, as shown in the following figure and table, shall be applied as required by the program being tested:

- Figure 7-9 Exterior Wall Section—Case L120A
- Table 7-16 Material Descriptions, Exterior Wall—Case L120A

Informative Note: Figure 7-9 and Table 7-16 are referenced for convenience. If the development of the Case P100A input file begins with modifications to Case L120A, changes identified in those tables have already been addressed.

Informative Note: Figures 7-28, 7-30, and 7-31, and Tables 7-51 through 7-53 contain only new information; changes are not highlighted in bold. Information in Figure 7-29 and Tables 7-47 through 7-50 not highlighted in bold is copied from Case L120A.

7.2.3.2.3 Radiative Properties of Massive Surfaces. For massive (brick) surfaces, solar absorptance and infrared emittance shall be 0.6 and 0.9, respectively (the same as for other surfaces).

7.2.3.2.4 Thermostat Control Strategies. The annual thermostat control settings below shall be used for the P-series cases.

Heating only:

- Heat = ON IF **TEMP** < 68°F; COOL = OFF

Cooling only:

- COOL = ON IF **TEMP** > 78°F; HEAT = OFF

Informative Note: "TEMP" refers to conditioned zone air temperature.

Informative Note: Because this is not deadband thermostat control, separate simulations for heating and cooling outputs were applied to generate example results (similar to the Tier 1 cases, where Lasvega.TMY is the cooling climate). Therefore, for proper comparison with example results, separate simulations with the tool/software being tested are needed for generating annual (or seasonal) heating and cooling outputs.

7.2.3.2.5 Interior Walls. The thermal mass of the interior walls within the conditioned zone shall be modeled if the program being tested has that capability.

Informative Note: As in the Tier 1 tests, the interior walls are not intended to divide the conditioned zone into separately controlled zones.

7.2.3.2.6 Raised Floor Exposed to Air. The floor shall be modeled as follows:

- The air temperature below the raised floor shall be equal to the outside air temperature.
- The underside of the conditioned-zone floor shall have an exterior film coefficient of 2.2 Btu/(h·ft^2·°F), consistent with a rough surface texture and zero windspeed; if the program being tested cannot set the exterior surface coefficient to a fixed value, the exterior surface coefficient shall be permitted to vary with wind speed.
- The conditioned-zone floor exterior surface (surface facing downward) shall receive no solar radiation.

Informative Note: See the informative note for Section 7.2.1.5 (Case L100A) for further discussion about modeling these assumptions.

7.2.3.2.7 Interior Solar Distribution. If the program being tested does not allow for variations of interior solar distribution or calculates this effect internally, skip this section and proceed to Section 7.2.3.2.8. Otherwise, the interior solar fractions from Table 7-48 shall be used.

Informative Note: Interior solar distribution is calculated as shown in Informative Annex B19. This represents a more detailed treatment appropriate to passive solar design.

Copyrighted material licensed to Sei Ito on 2020-06-26 for licensee's use only. All rights reserved. No further reproduction or distribution is permitted. Distributed by Techstreet for ASHRAE, www.techstreet.com

7.2.3.2.8 Input Procedure. To develop inputs for Case P100A, **begin with Case L120A** and proceed as follows.

a. All window assemblies from the north, east, and west walls shall be replaced with the Case L120A solid exterior wall material specified in Figure 7-9 and Table 7-16 (Case L120A). Resulting component surface areas and solar fractions shall be as shown in Table 7-48.
b. The door from the south wall shall be moved to the east wall as shown in Figure 7-28. Material properties of doors shall not be changed. Resulting component surface areas and solar fractions shall be as shown in Table 7-48.
c. The south wall shall be constructed as shown in Figure 7-28 and Table 7-48. All windows shall be clear double pane with wood frame and shall be located on the south wall. The gross window area (including frames) shall be 325 ft^2. The window unit size shall be modified as shown. The overall (glass plus frame) window properties shall be as specified in Figure 7-31 and Table 7-47 and (in greater detail) in Tables 7-51 through 7-53. The component surface areas shall be as shown in Table 7-48. If component solar fractions have been input in the base-case model, the solar fractions shall be changed as shown in Table 7-48. All insulated wall area shall apply materials and thermal properties as specified for the insulated wall section of Figure 7-9 and Table 7-16. The insulated wall area shall be located above the window headers. The remaining portion of the south wall shall apply only the materials and thermal properties for the framed wall section from Figure 7-9 and Table 7-16.

Informative Note: The modified window unit size allows more glazing to be applied to the south wall. Because of the large amount of window area, the only place for batt insulation is above the window headers.

d. The L120A floor shall be replaced with the raised floor exposed to air specified in Figure 7-29 and Table 7-49. Component surface areas and solar fractions shall be as shown in Table 7-48.

Informative Note: For the purpose of this test, the floor structure is assumed to be sufficient to support the brick pavers without modification.

e. The three 14 ft low-mass interior walls shall be replaced with the double-brick walls as shown in Figure 7-28. The double-brick interior wall materials shall be as specified in Figure 7-30 and Table 7-50. All other lightweight interior walls shall remain as located in Figure 7-2 (Case L100A). Component surface areas and solar fractions shall be as shown in Table 7-48.

7.2.3.3 Case P105A: Passive Solar with Overhang. Case P105A shall be modeled **exactly as Case P100A except** that a south-wall opaque overhang shall be included that extends outward horizontally 3.47 ft with vertical offset of 2.08 ft from the top of the window (0.83 ft from the top of the wall) as shown in Figure 7-32. The overhang shall traverse the entire length of the south wall. Window locations remain as shown in Figure 7-28 (Case P100A).

If the input capabilities of the software being tested do not allow the exact geometries of the windows and overhang to be modeled as shown in Figures 7-28 and 7-32, a simplified model of the south wall shall be permitted.

Informative Note: Figure 7-33 shows one possible simplified model. Proper dimensions for this example are obtained using Figures 7-28 and 7-31 and Table 7-48 (see Case P100A). While the overhang is not shown in Figure 7-33, it must be included as shown in Figure 7-32.

Informative Note: Overhang width and offset are based on full shading for a summer noon solar altitude angle of 68 degrees, and no shading for a winter noon solar altitude angle of 31 degrees.

7.2.3.4 Case P110A: Low-Mass Version of Case P100A. Case P110A shall be modeled **exactly as Case P100A except** for the following changes. The brick pavers shall be removed from the floor and replaced with an equivalent-resistance massless floor covering. Also, the three massive interior walls shall be replaced with low-mass interior walls such that all interior walls are now configured as in Case L100A (Tier 1 base case).

Changes to Case P100A for developing Case P110A shall apply information highlighted in bold in the following figure and tables as required by the program being tested:

- Figure 7-34 Raised Floor Exposed to Air, Section—Case P110A
- Table 7-54 Building Thermal Summary—Case P110A
- Table 7-55 Component Surface Areas and Solar Fractions—Case P110A
- Table 7-56 Material Descriptions, Raised Floor Exposed to Air—Case P110A

Case P110A shall apply interior wall materials of Case L100A as shown in the figure and table below as required by the program being tested:

- Figure 7-7 Interior Wall Plan Section—Case L100A
- Table 7-8 Material Descriptions, Interior Wall—Case L100A

Informative Note: Information in Figure 7-34 and Tables 7-54 through 7-56 not highlighted in bold is copied from Case P100A.

7.2.3.5 Case P140A: Zero Window Area Version of Case P100A. Case P140A shall be modeled **exactly as Case P100A except** that the glazing shall be removed from the south wall such that the entire south wall is opaque with the material properties shown in Figure 7-9 (Case L120A) and specified in Table 7-16 (Case L120A).

Changes to Case P100A for developing Case P140A shall be consistent with information highlighted in bold in the following tables as required by the program being tested:

- Table 7-57 Building Thermal Summary—Case P140A
- Table 7-58 Component Surface Areas—Case P140A

Informative Note: Information in the tables not highlighted in bold is copied from Case P100A.

7.2.3.6 Case P150A: Even Window Distribution Version of Case P100A. Case P150A shall be modeled **exactly as Case P100A except** that all windows shall be evenly distributed among the walls. Interior walls shall be as in Case

Copyrighted material licensed to Sei Ito on 2020-06-26 for licensee's use only. All rights reserved. No further reproduction or distribution is permitted. Distributed by Techstreet for ASHRAE, www.techstreet.com

P100A. Changes to Case P100A for developing Case P150A shall apply information from Figure 7-35 and shall be consistent with information highlighted in bold in the following tables as required by the program being tested:

- Figure 7-35 Window Locations—Case P150A
- Table 7-59 Building Thermal Summary—Case P150A
- Table 7-60 Component Surface Areas and Solar Fractions—Case P150A

Informative Note: Information in the tables not highlighted in bold is copied from Case P100A.

Informative Note: The calculation of interior solar distribution fractions in Table 7-60 assumes that solar energy transmitted through windows and not absorbed by lightweight furnishings or lost due to cavity albedo is distributed to all interior surfaces in proportion to their areas. Solar lost (cavity albedo) remains as for Case P100A.

Copyrighted material licensed to Sei Ito on 2020-06-26 for licensee's use only.
All rights reserved. No further reproduction or distribution is permitted. Distributed by Techstreet for ASHRAE, www.techstreet.com

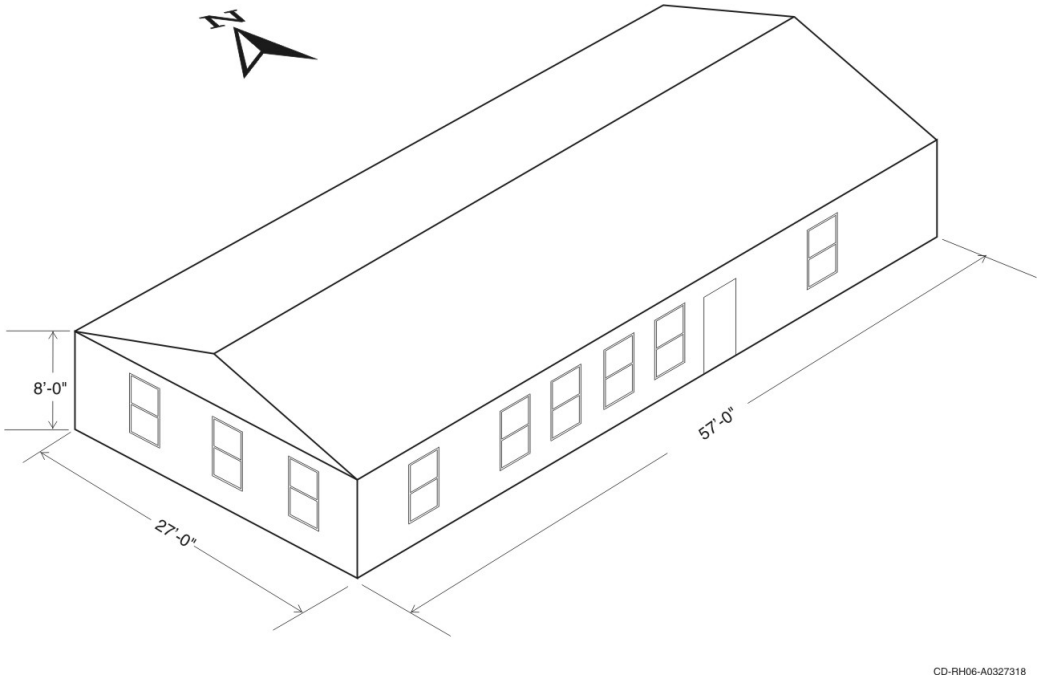

Figure 7-1 Base-building axonometric.

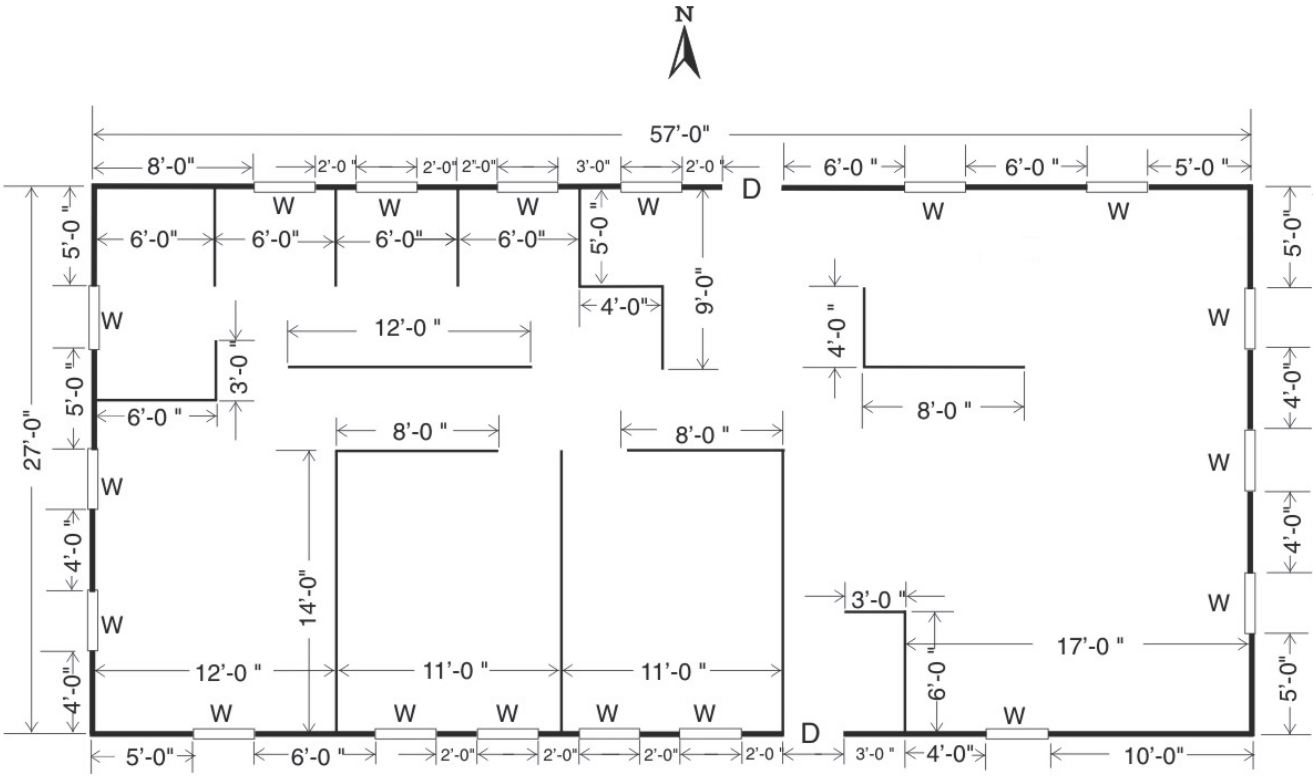

Note: To match the interior wall length and corresponding interior wall area listed in Table 7-3, a 9 ft length of interior wall was removed (versus the original HERS BESTEST floor plan).

CD-RH06-A0327301

Legend:

W = Window (3 ft wide × 5 ft high), see Figure 7-8

D = Solid-core wood door (3 ft wide × 6 ft 8 in. high)

Figure 7-2 Floor plan—Case L100A.

Copyrighted material licensed to Sei Ito on 2020-06-26 for licensee's use only.
All rights reserved. No further reproduction or distribution is permitted. Distributed by Techstreet for ASHRAE, www.techstreet.com

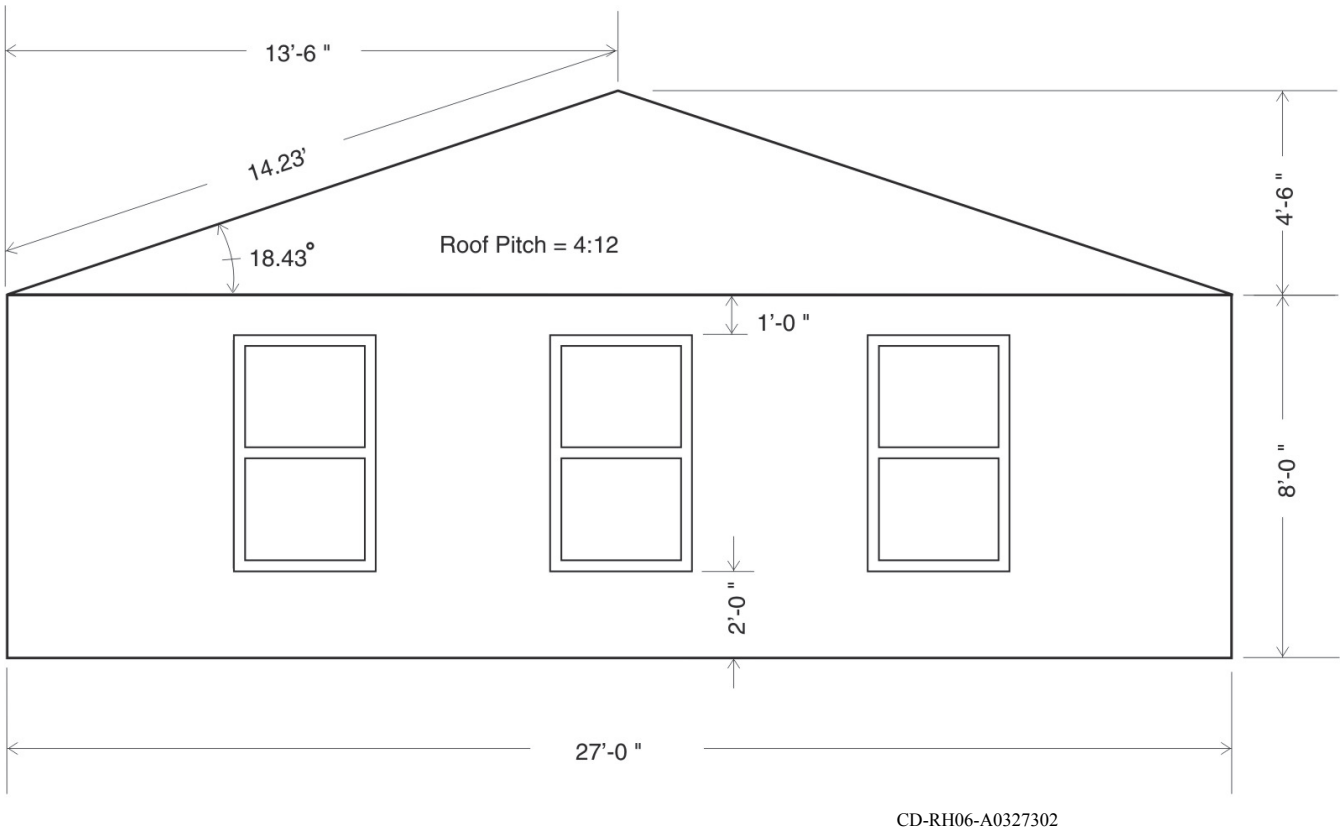

Note: All windows located vertically as shown; see Figure 7-8 for window detail.

Figure 7-3 East side elevation—Case L100A.

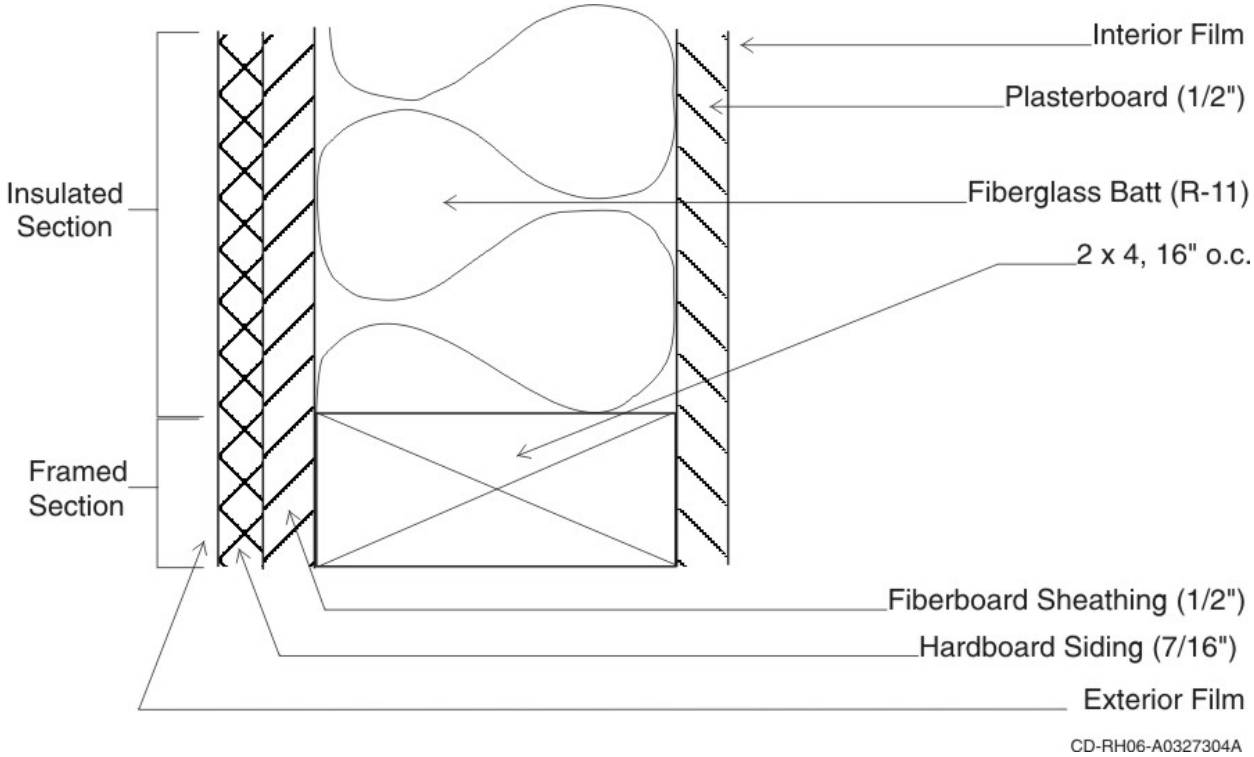

Figure 7-4 Exterior wall plan section—Case L100A.

Copyrighted material licensed to Sei Ito on 2020-06-26 for licensee's use only.
All rights reserved. No further reproduction or distribution is permitted. Distributed by Techstreet for ASHRAE, www.techstreet.com

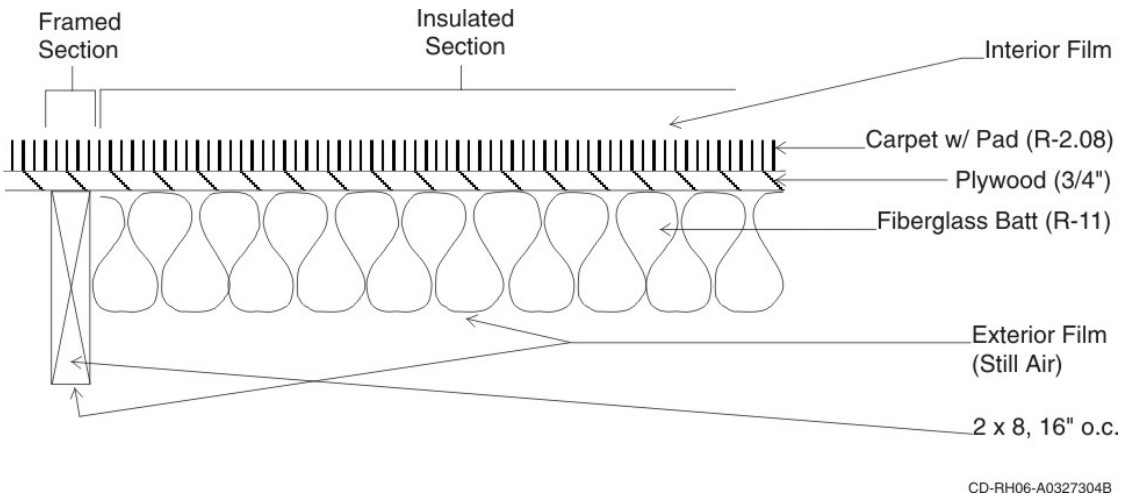

Figure 7-5 Raised floor exposed to air, section—Case L100A.

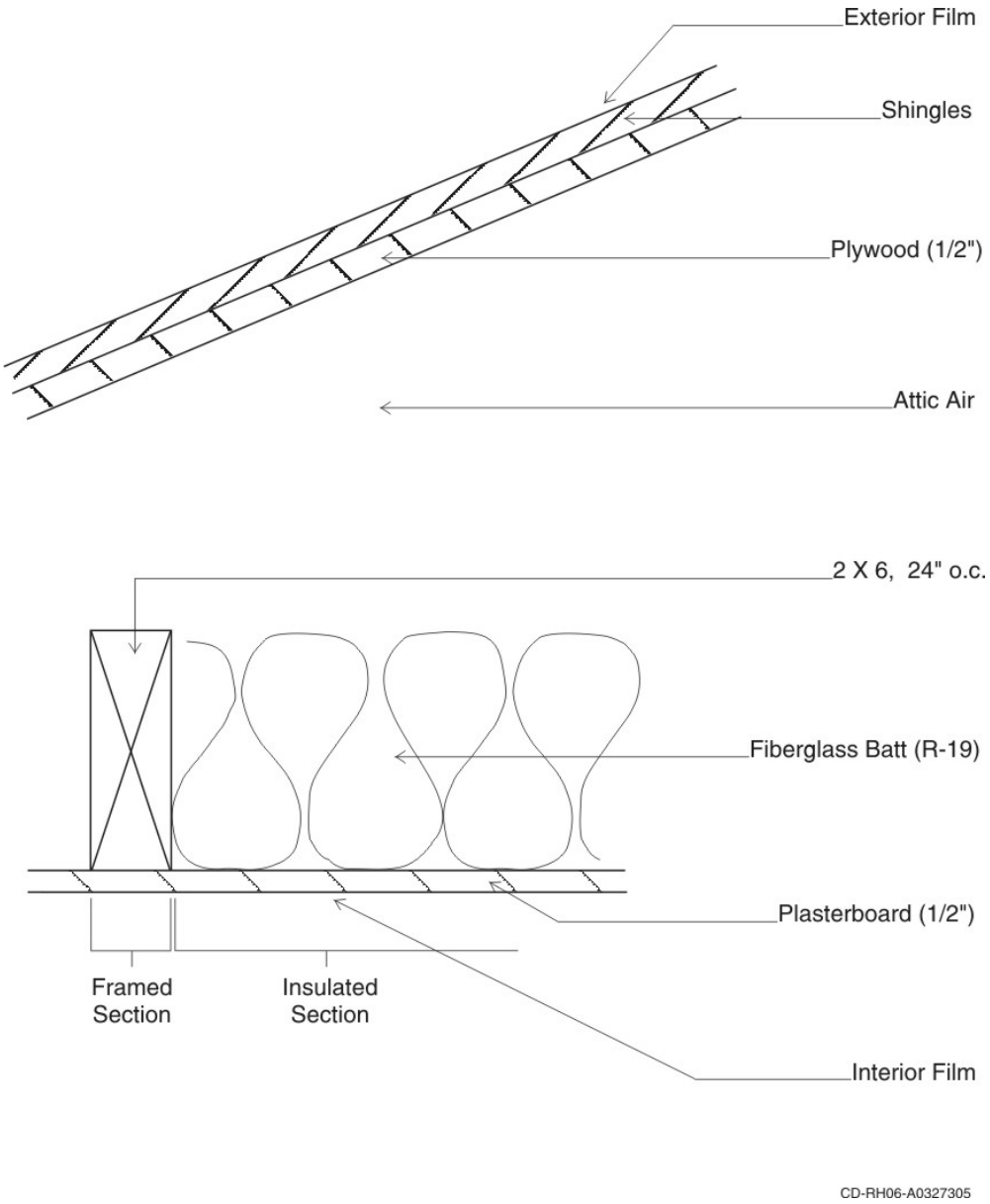

Figure 7-6 Ceiling/attic/roof section—Case L100A.

Copyrighted material licensed to Sei Ito on 2020-06-26 for licensee's use only.
All rights reserved. No further reproduction or distribution is permitted. Distributed by Techstreet for ASHRAE, www.techstreet.com

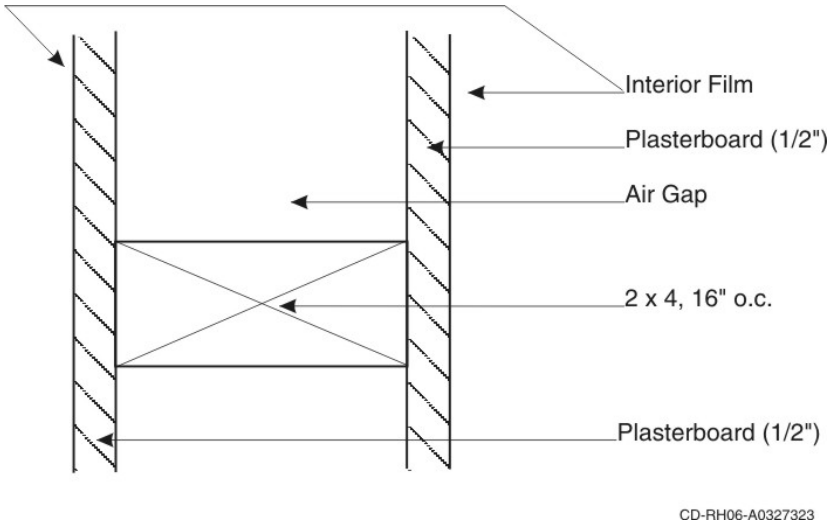

Figure 7-7 Interior wall plan section—Case L100A.

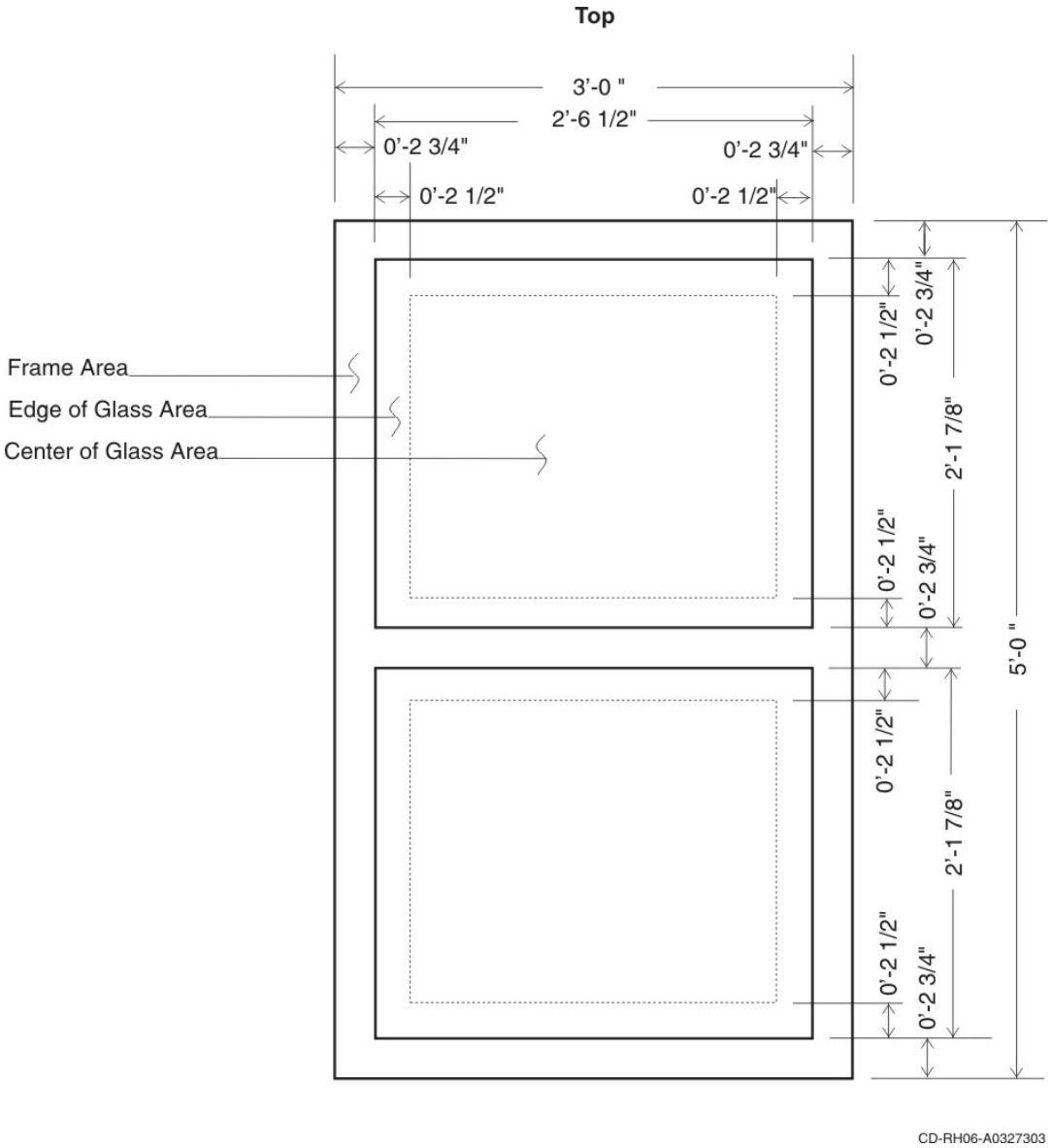

Figure 7-8 Window detail, vertical slider (NFRC AA) with 2 3/4 in. wide frame—Case L100A.

Copyrighted material licensed to Sei Ito on 2020-06-26 for licensee's use only.
All rights reserved. No further reproduction or distribution is permitted. Distributed by Techstreet for ASHRAE, www.techstreet.com

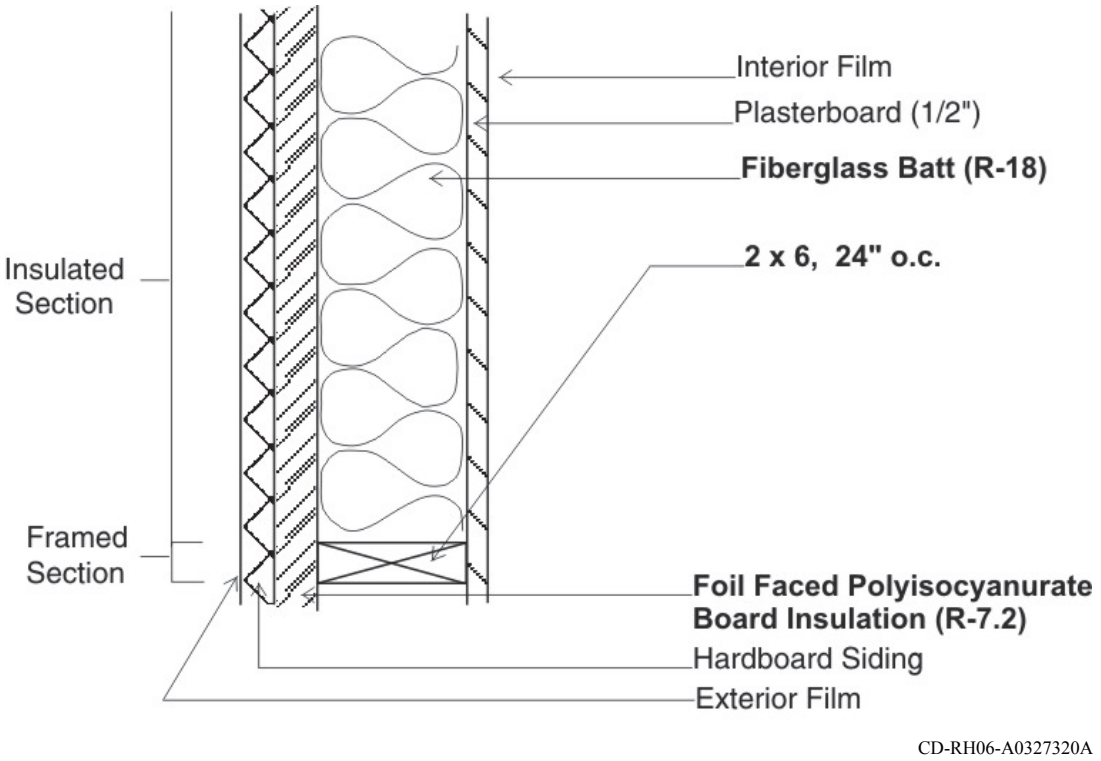

Note: Changes to Case L100A are highlighted with bold font.

Figure 7-9 Exterior wall plan section—Case L120A.

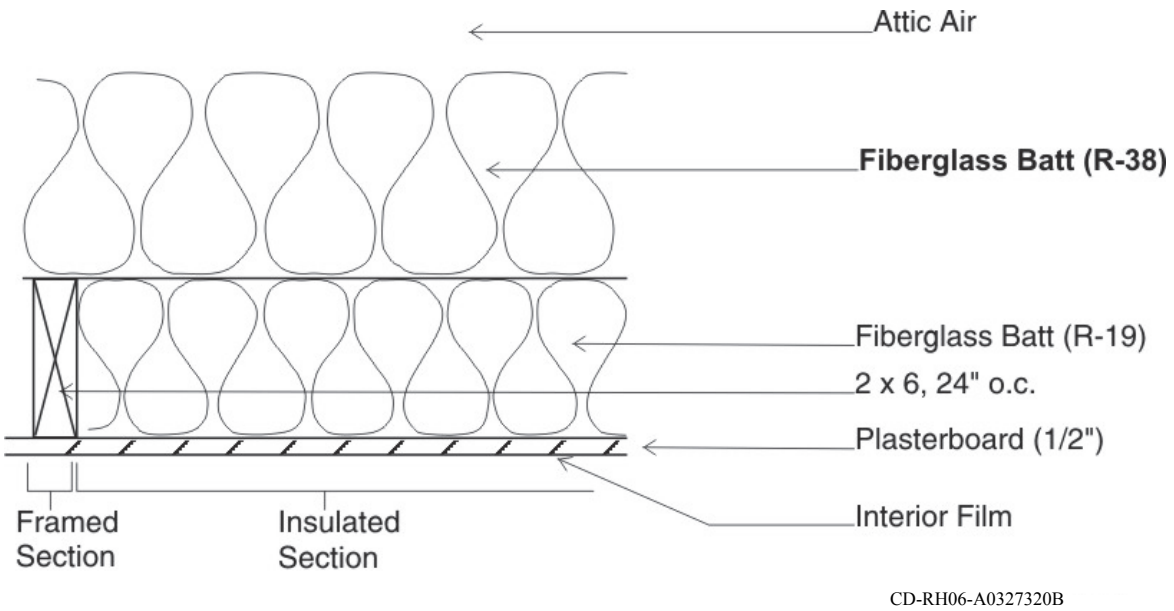

Note: Changes to Case L100A are highlighted with bold font.

Figure 7-10 Ceiling section—Case L120A.

Copyrighted material licensed to Sei Ito on 2020-06-26 for licensee's use only. All rights reserved. No further reproduction or distribution is permitted. Distributed by Techstreet for ASHRAE, www.techstreet.com

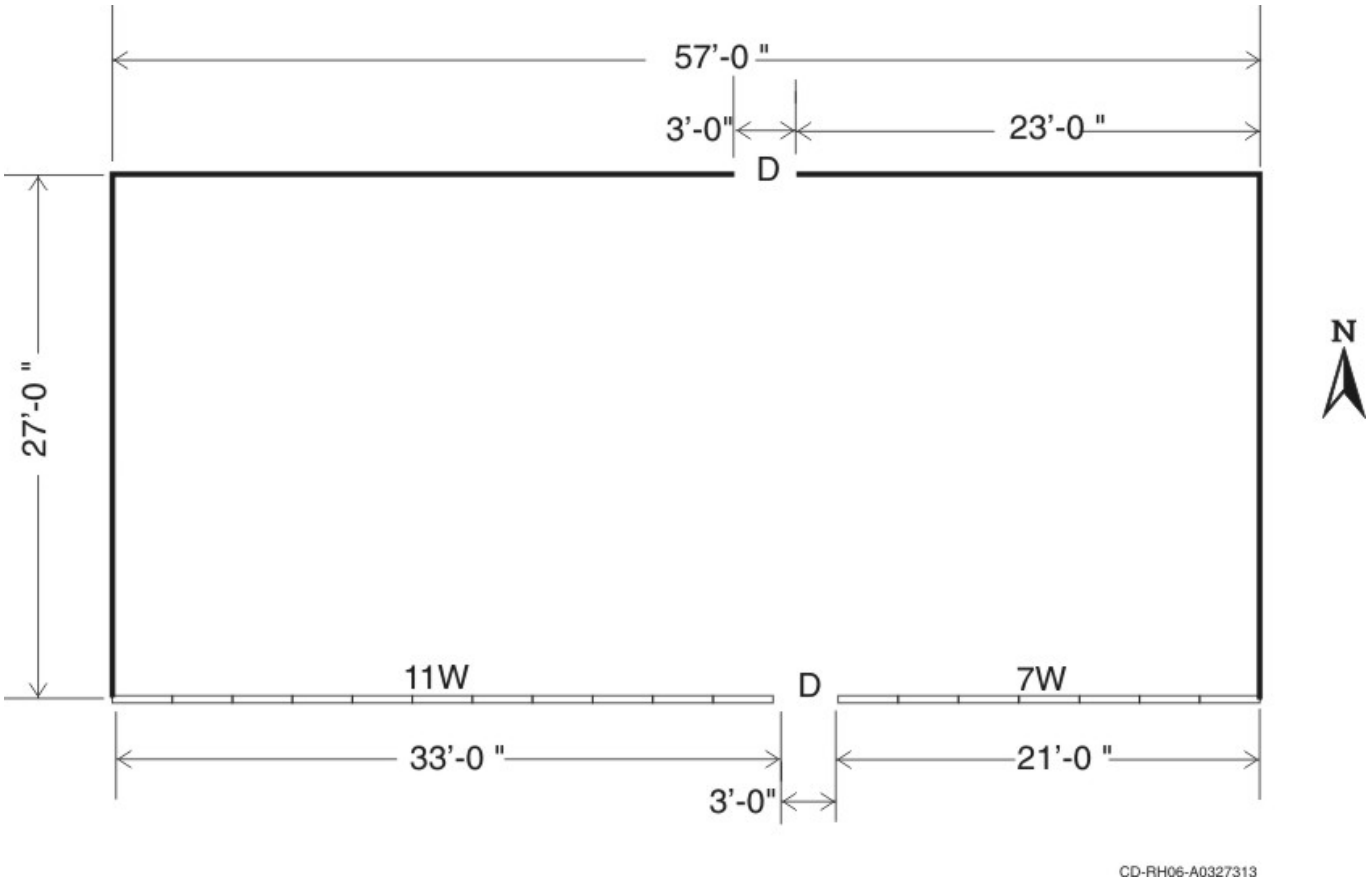

Note: Interior walls are same as for Case L100A.

Legend:
#W:

W = Window (3 ft wide × 5 ft high), see Figure 7-8

= Number of windows along given length of exterior wall

D = Solid-core wood door (3 ft wide × 6 ft 8 in. high)

Figure 7-11 Floor plan, exterior wall and south window locations—Case L150A.

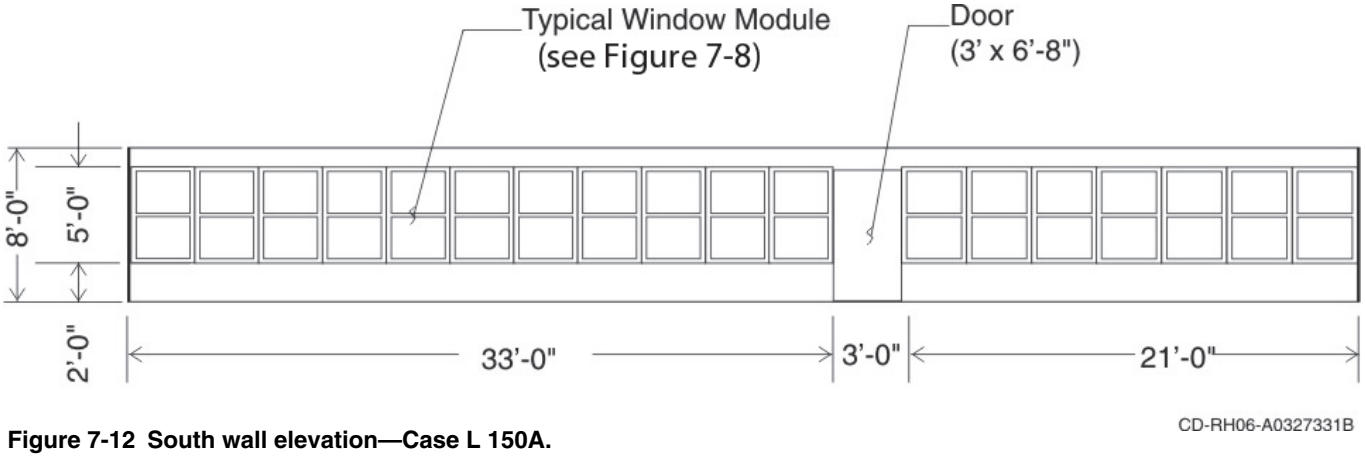

Figure 7-12 South wall elevation—Case L 150A.

Copyrighted material licensed to Sei Ito on 2020-06-26 for licensee's use only.
All rights reserved. No further reproduction or distribution is permitted. Distributed by Techstreet for ASHRAE, www.techstreet.com

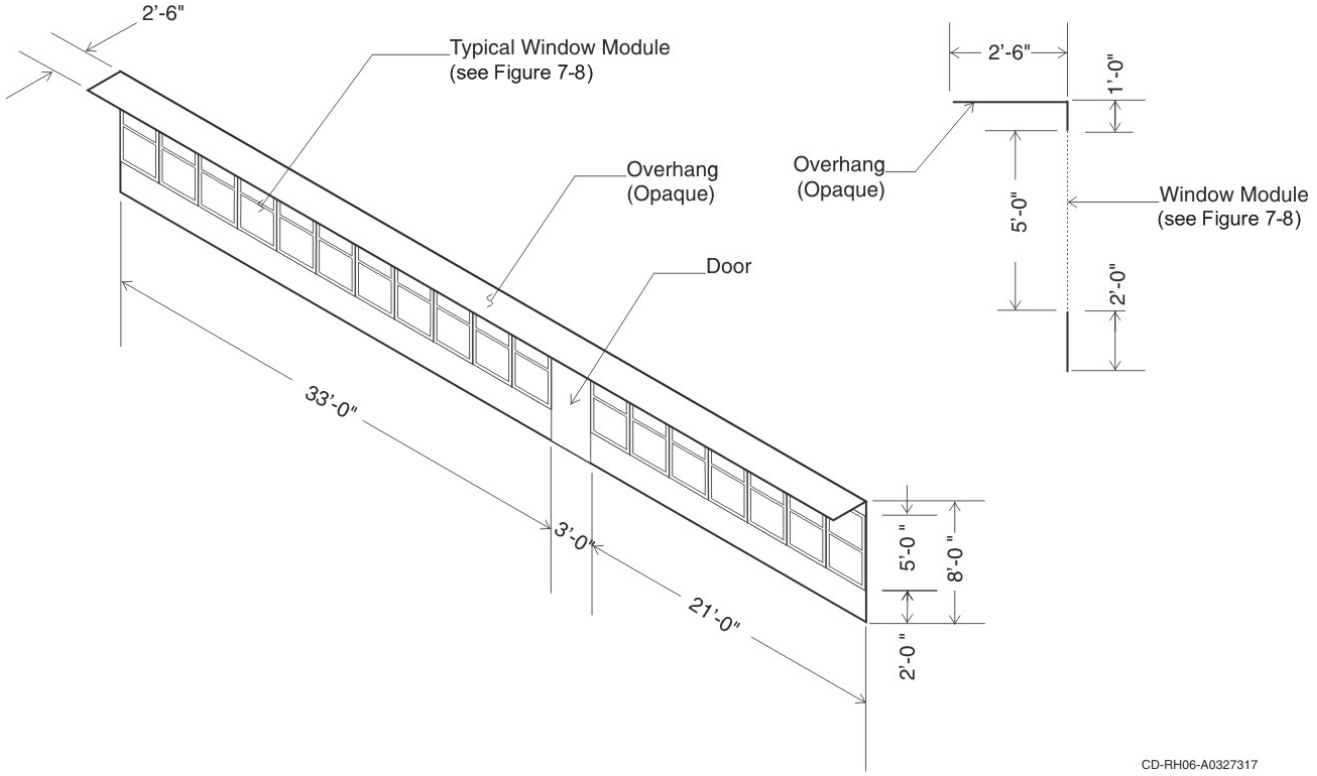

Figure 7-13 South overhang—Case L155A.

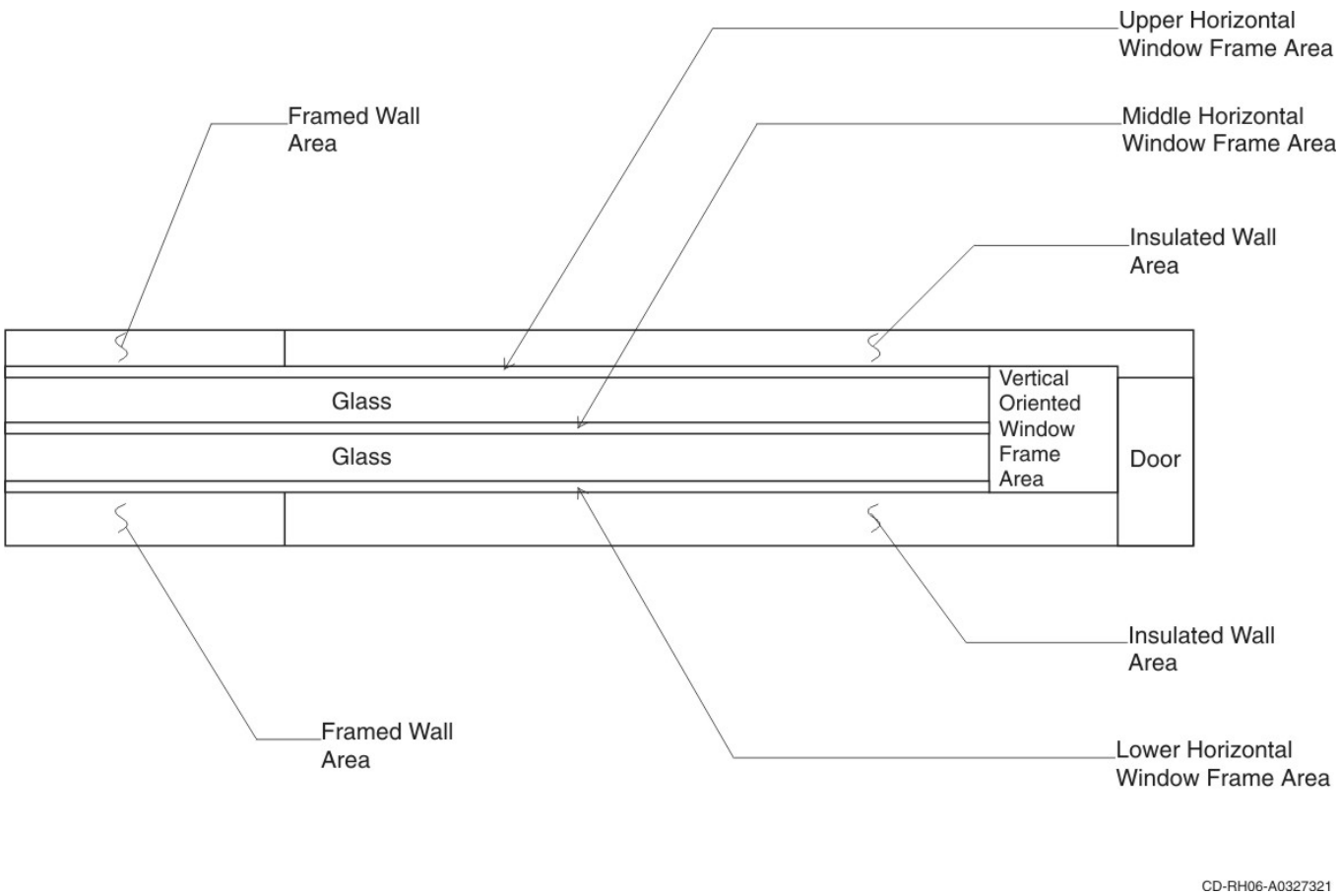

Figure 7-14 Example model of south wall for simulating south overhang effect in Case L155A.
Informative Note: Figure 7-14 is informative material.

Copyrighted material licensed to Sei Ito on 2020-06-26 for licensee's use only.
All rights reserved. No further reproduction or distribution is permitted. Distributed by Techstreet for ASHRAE, www.techstreet.com

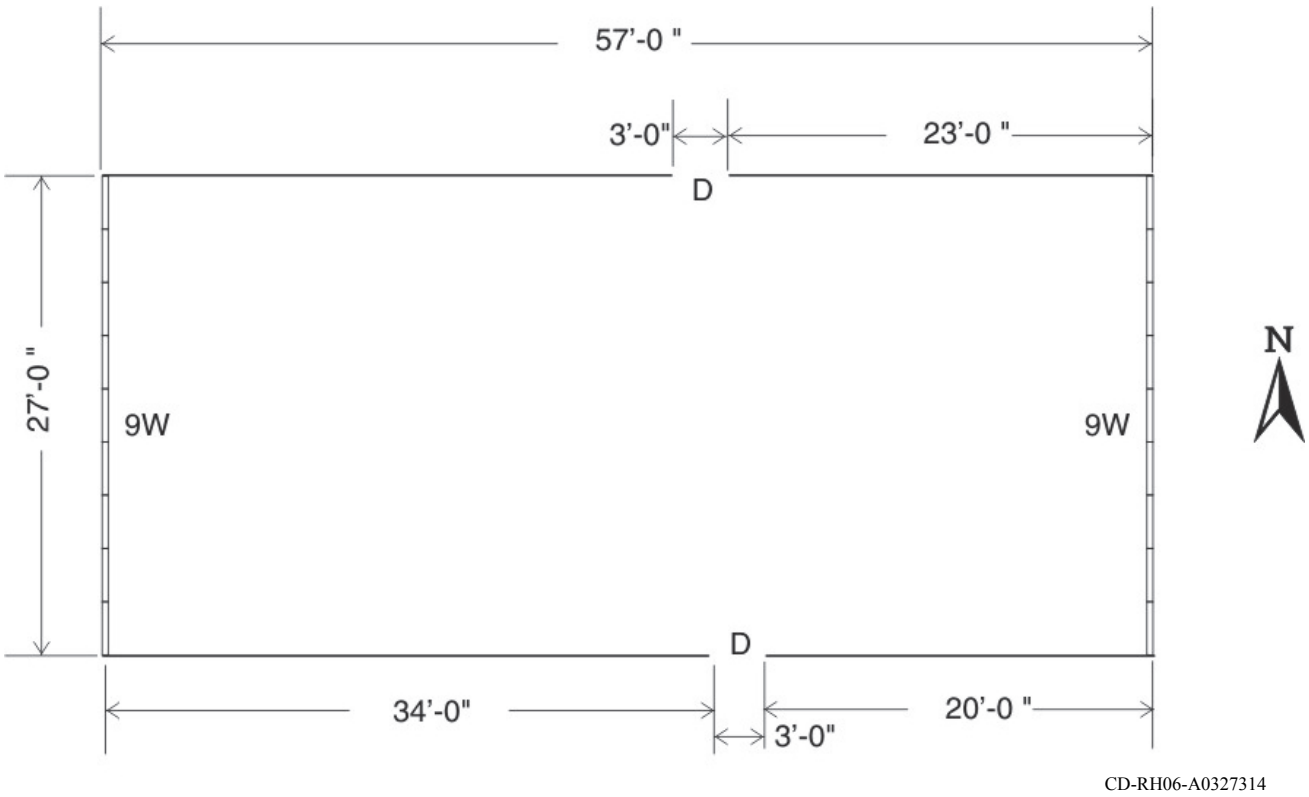

Note: Interior walls are the same as for Case L100A.

Legend:
#W:

W = window (3 ft wide × 5 ft high); see Figure 7-8

= number of windows along given length of exterior wall

D = solid-core wood door (3 ft wide × 6 ft 8 in. high)

Figure 7-15 East and west window locations—Case L160A.

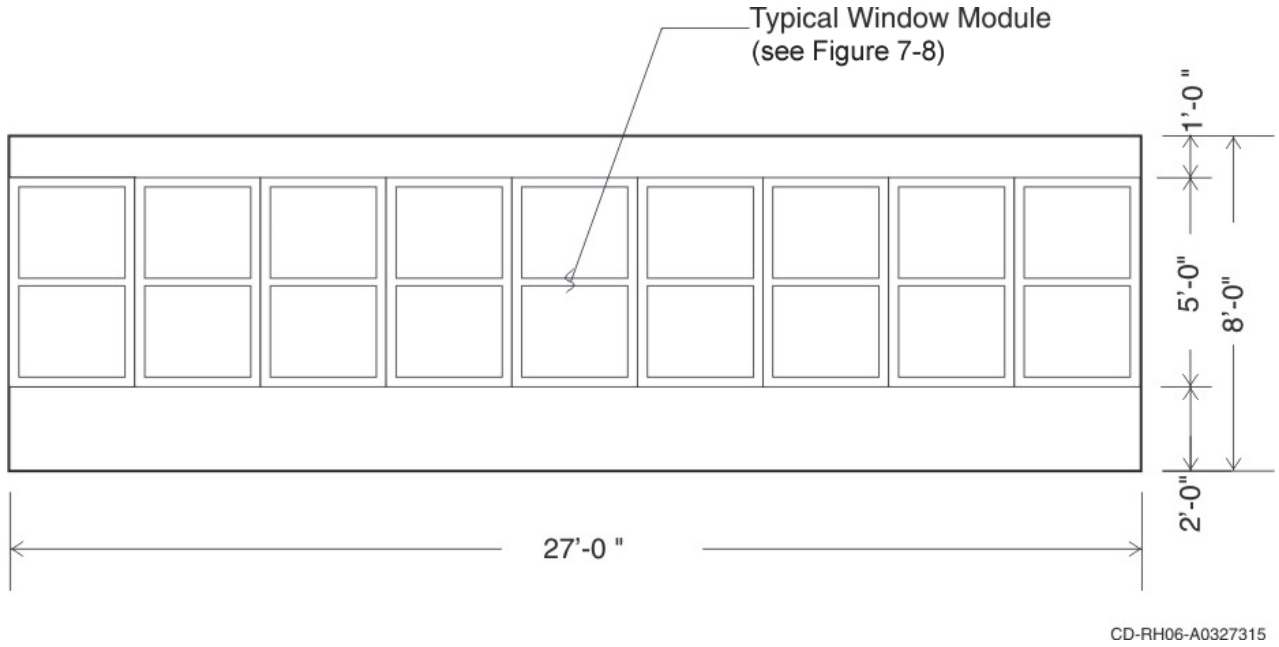

Figure 7-16 East/west wall elevation—Case L160A.

Copyrighted material licensed to Sei Ito on 2020-06-26 for licensee's use only.
All rights reserved. No further reproduction or distribution is permitted. Distributed by Techstreet for ASHRAE, www.techstreet.com

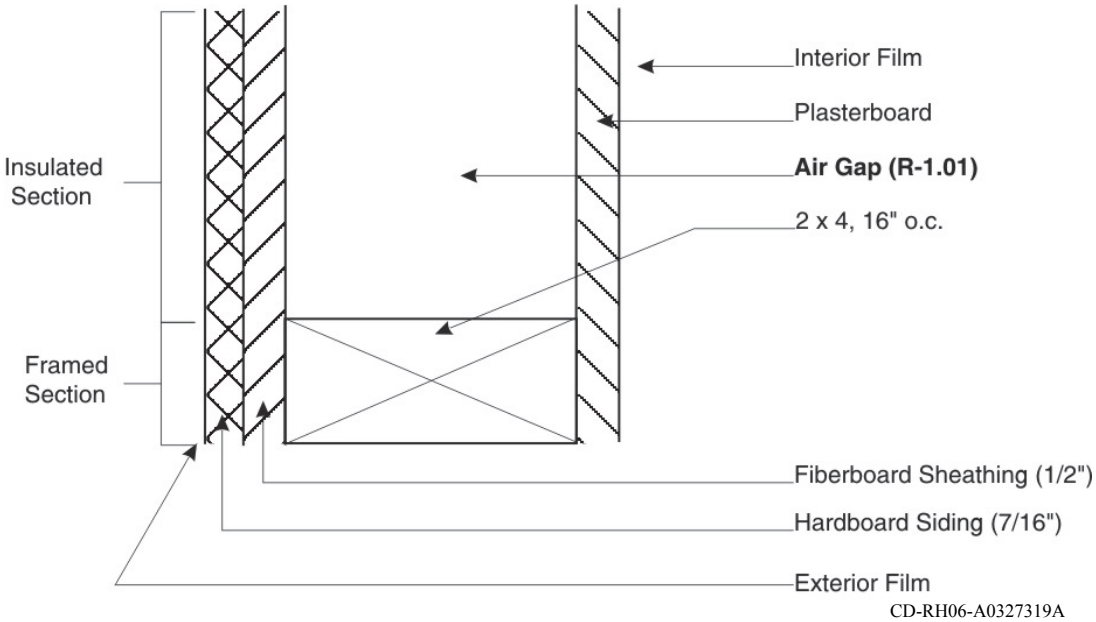

Note: Changes to Case L100A are highlighted with bold font.

Figure 7-17 Exterior wall plan section—Case L200A.

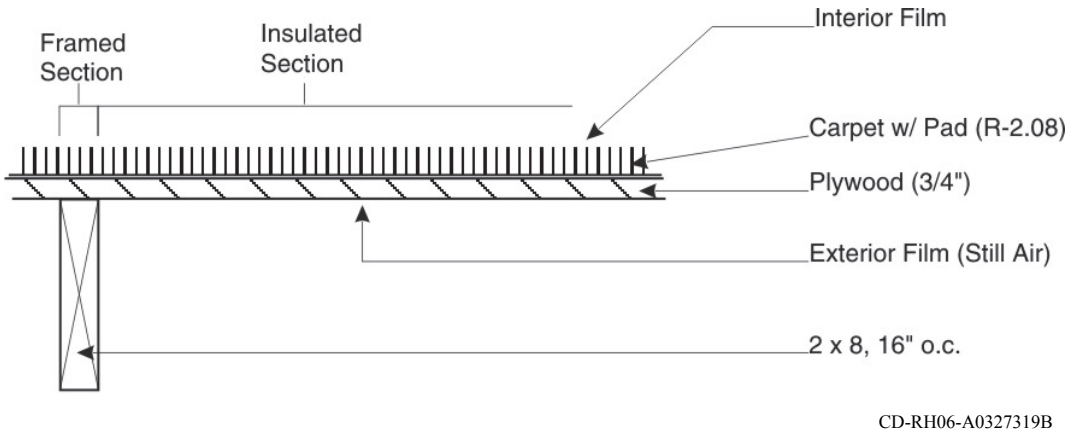

Note: R-11 batt insulation of Case L100A has been removed.

Figure 7-18 Raised floor exposed to air, section—Case L200A.

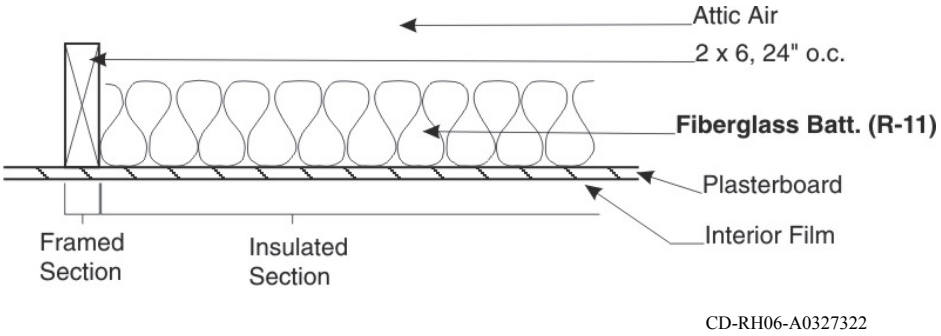

Note: Changes to Case L100A are highlighted with bold font.

Figure 7-19 Ceiling section—Case L200A.

Copyrighted material licensed to Sei Ito on 2020-06-26 for licensee's use only.
All rights reserved. No further reproduction or distribution is permitted. Distributed by Techstreet for ASHRAE, www.techstreet.com

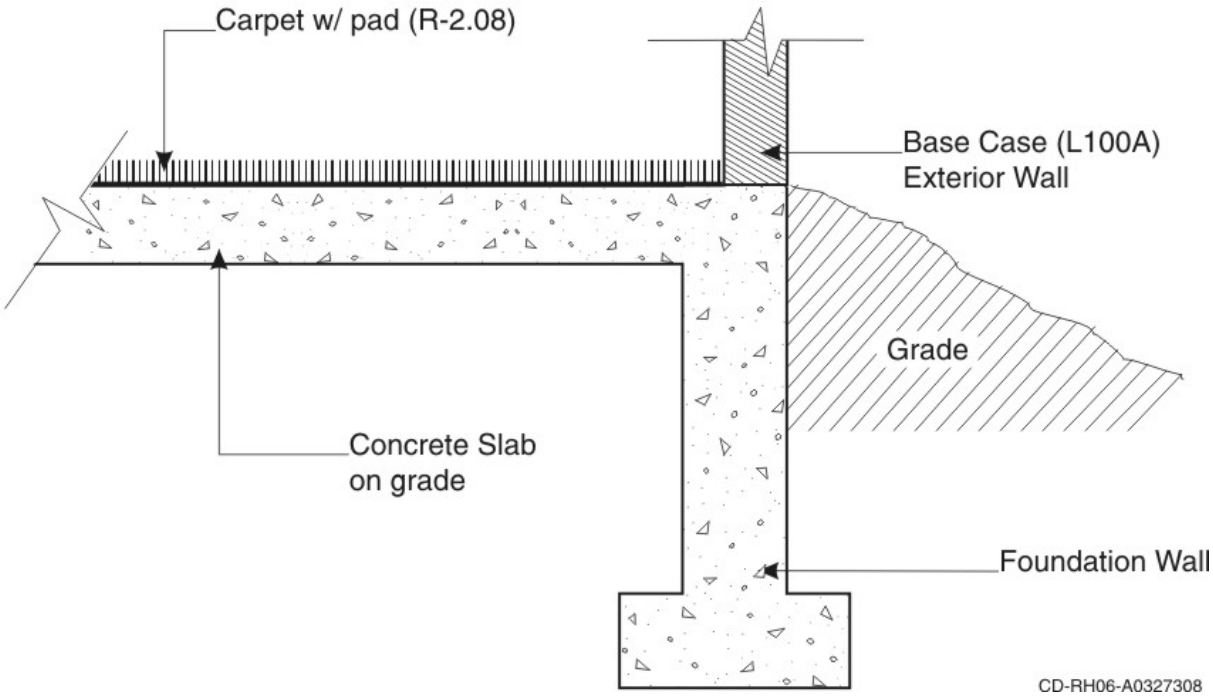

Figure 7-20 Uninsulated slab-on-grade, section—Case L302A.

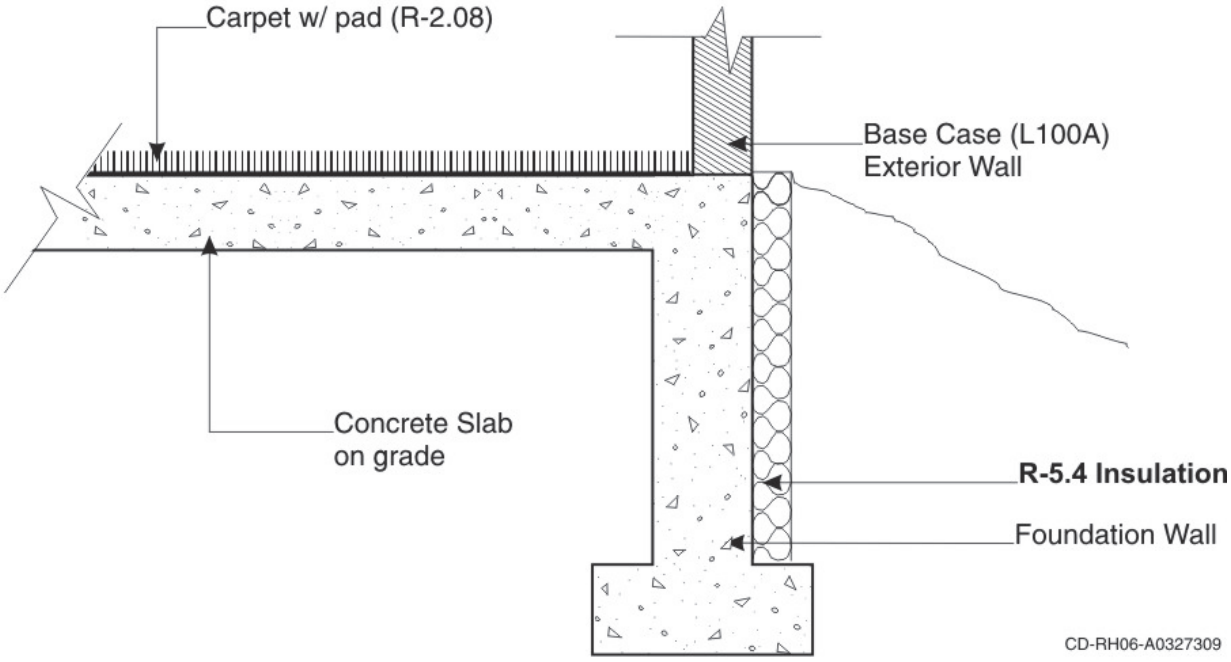

Note: Changes to Case L302A are highlighted with bold font.

Figure 7-21 Slab on grade with foundation wall exterior insulation, section—Case L304A.

Copyrighted material licensed to Sei Ito on 2020-06-26 for licensee's use only.
All rights reserved. No further reproduction or distribution is permitted. Distributed by Techstreet for ASHRAE, www.techstreet.com

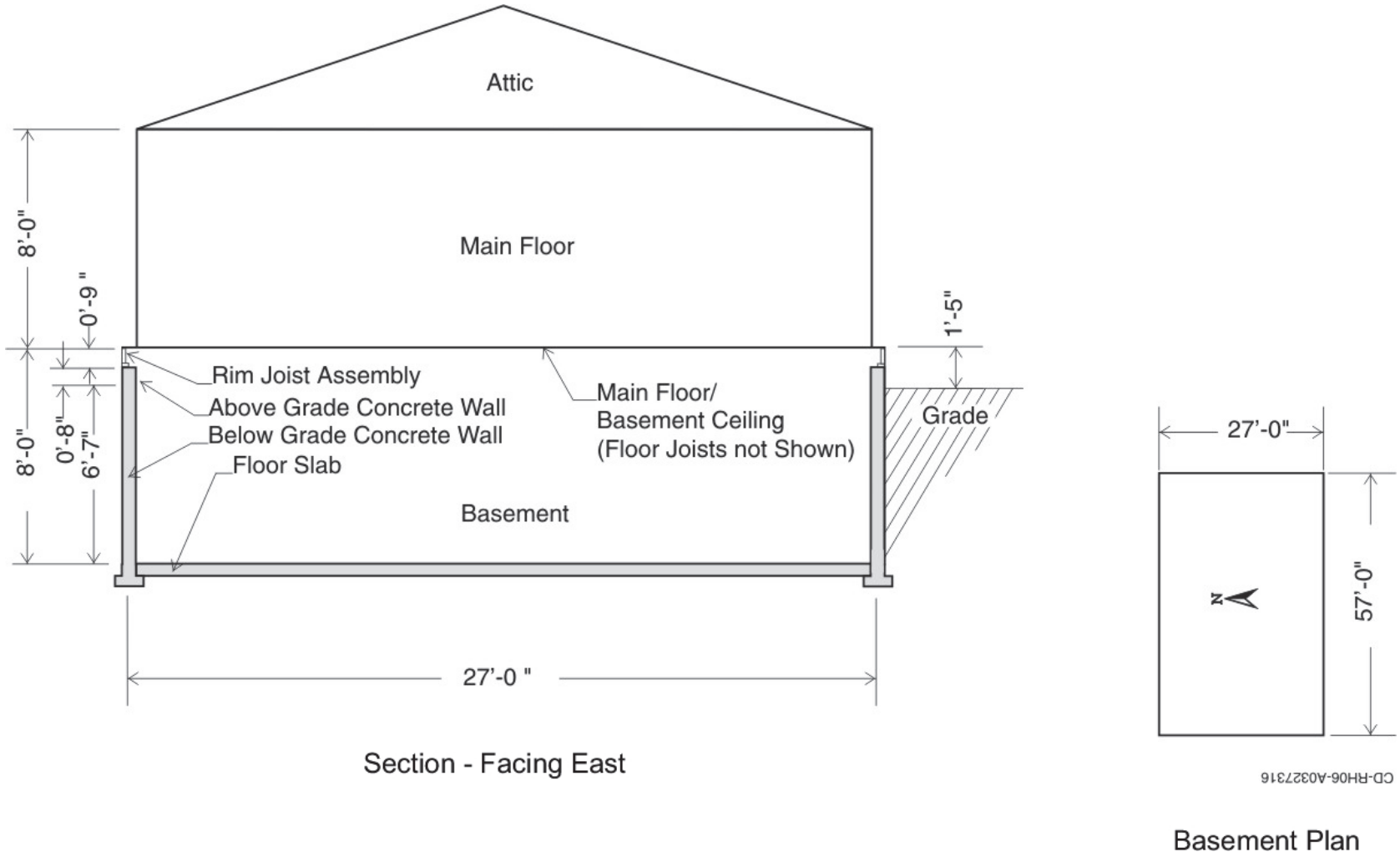

Figure 7-22 Basement series base building, section and plan.

Copyrighted material licensed to Sel Ito on 2020-06-26 for licensee's use only.
All rights reserved. No further reproduction or distribution is permitted. Distributed by Techstreet for ASHRAE, www.techstreet.com

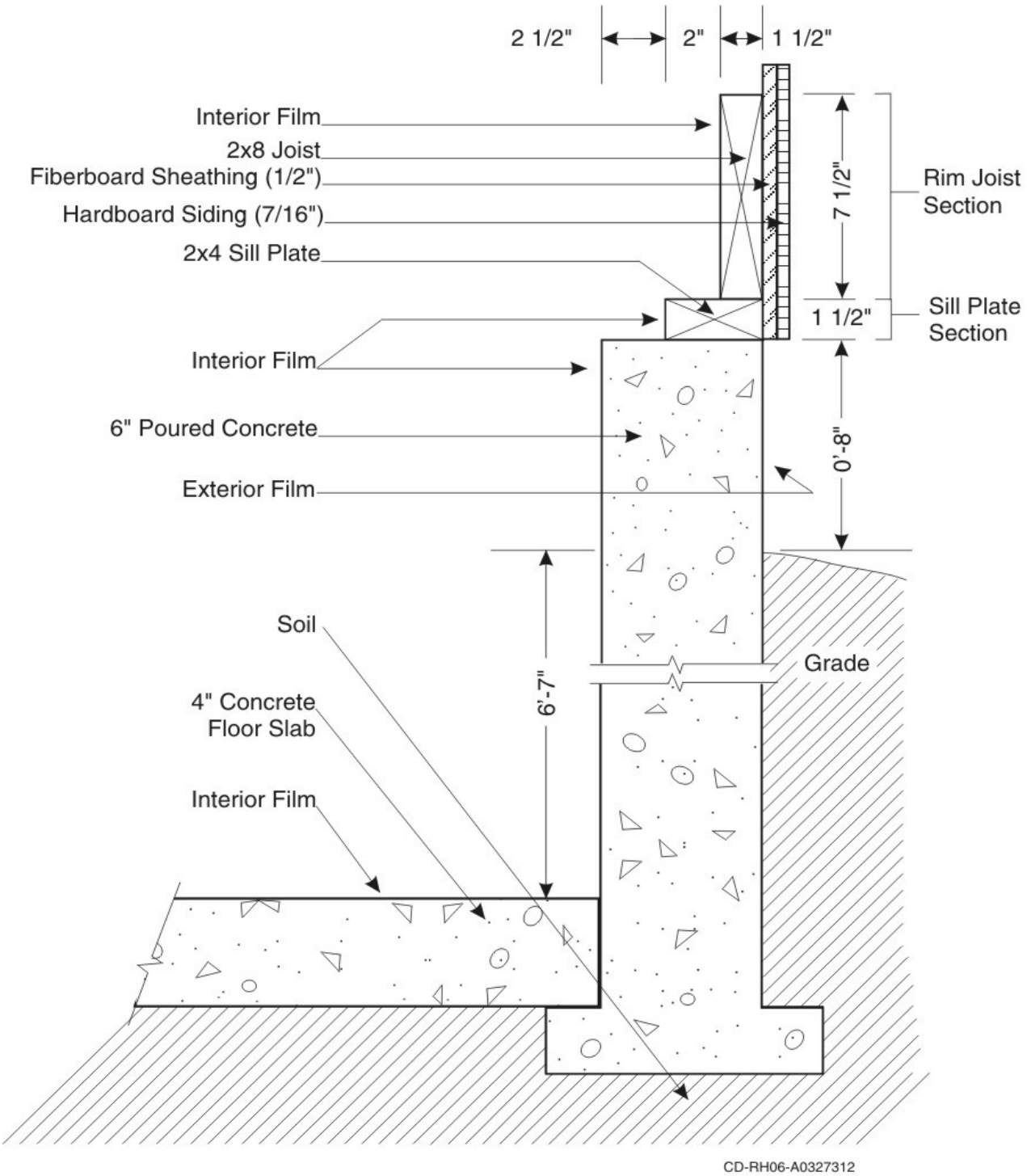

Figure 7-23 Basement wall and floor section—Case L322A.

Copyrighted material licensed to Sei Ito on 2020-06-26 for licensee's use only.
All rights reserved. No further reproduction or distribution is permitted. Distributed by Techstreet for ASHRAE, www.techstreet.com

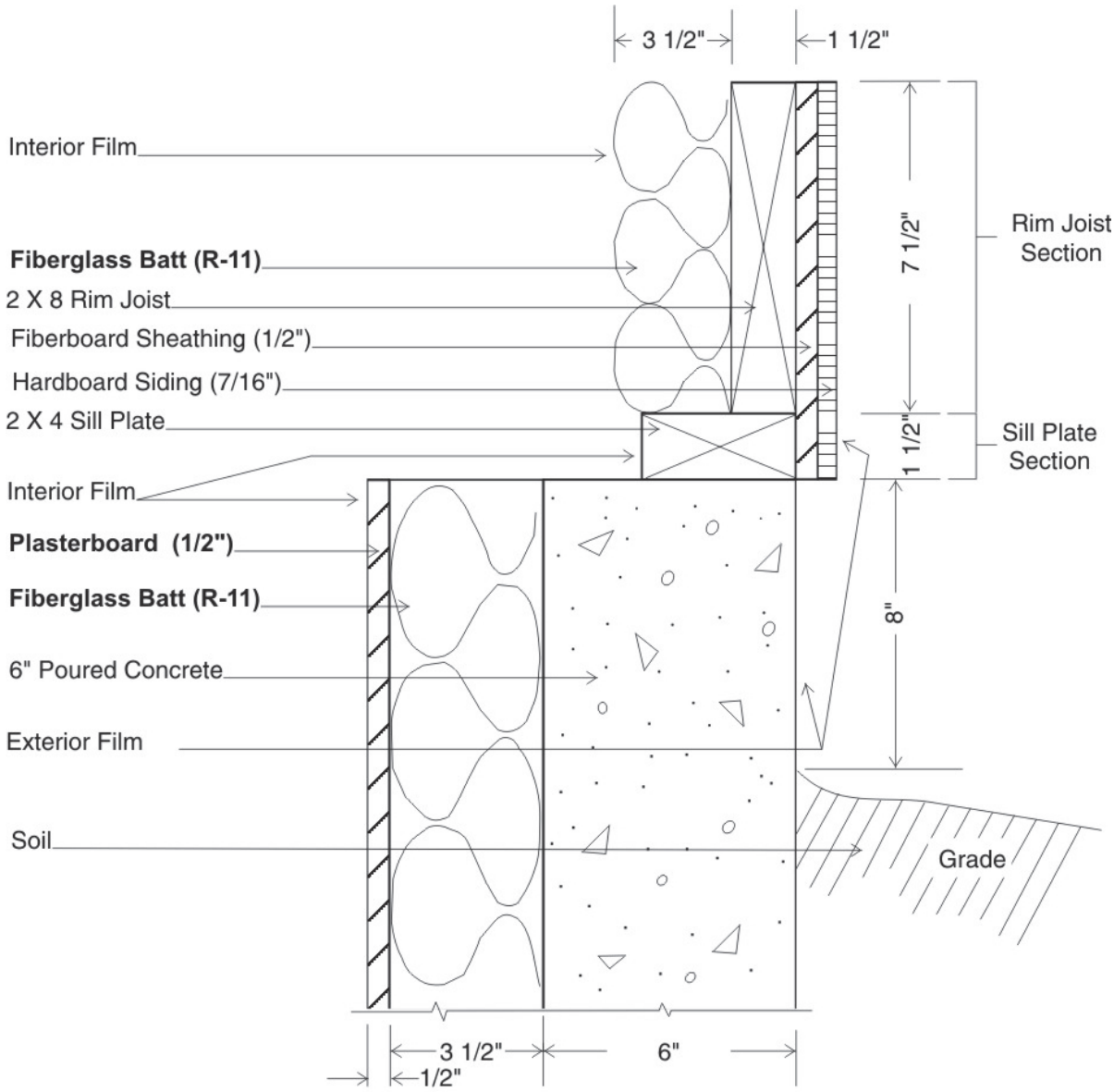

Notes: (1) Changes to case L322A are highlighted with bold font. (2) Detail showing floor-joist attachment to sill plate and its effect on rim joist insulation is ignored for the purpose of this test. Use the above rim joist section for all walls, regardless of orientation.

Figure 7-24 Insulated basement wall-plan section—Case L324A.

Copyrighted material licensed to Sei Ito on 2020-06-26 for licensee's use only. All rights reserved. No further reproduction or distribution is permitted. Distributed by Techstreet for ASHRAE, www.techstreet.com

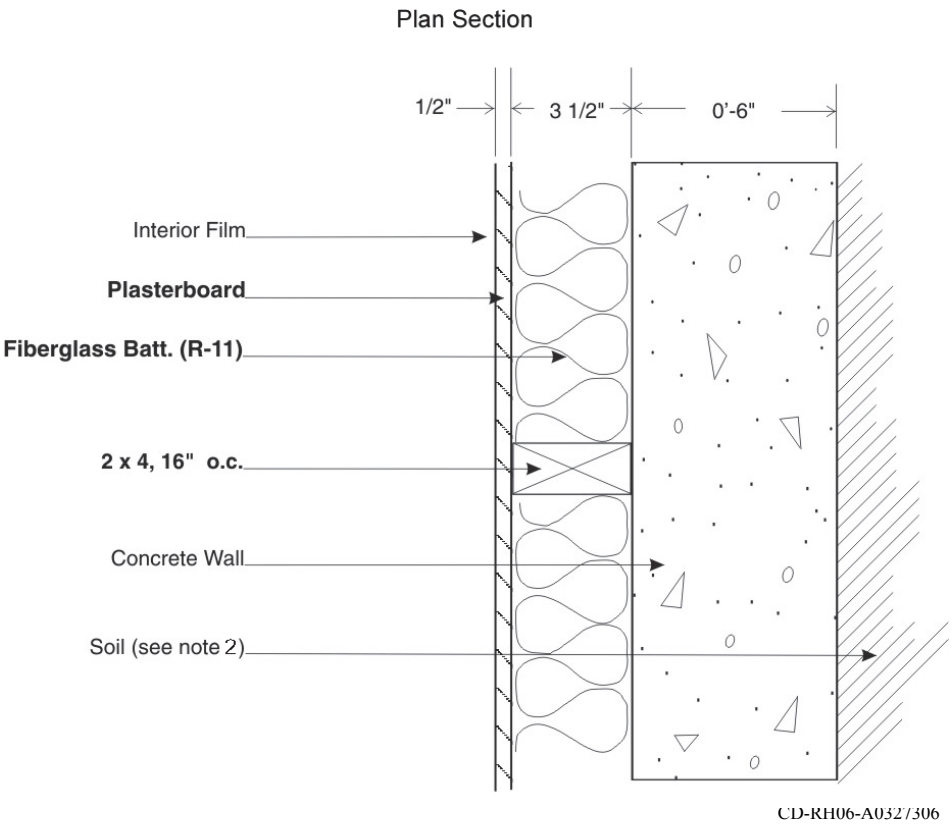

Notes: (1) Changes to case L322A are highlighted with bold font. (2) Soil does not apply to above-grade portion of basement wall. Effective soil layer thickness varies with wall depth below grade.

Figure 7-25 Insulated basement wall-plan section—Case L324A.

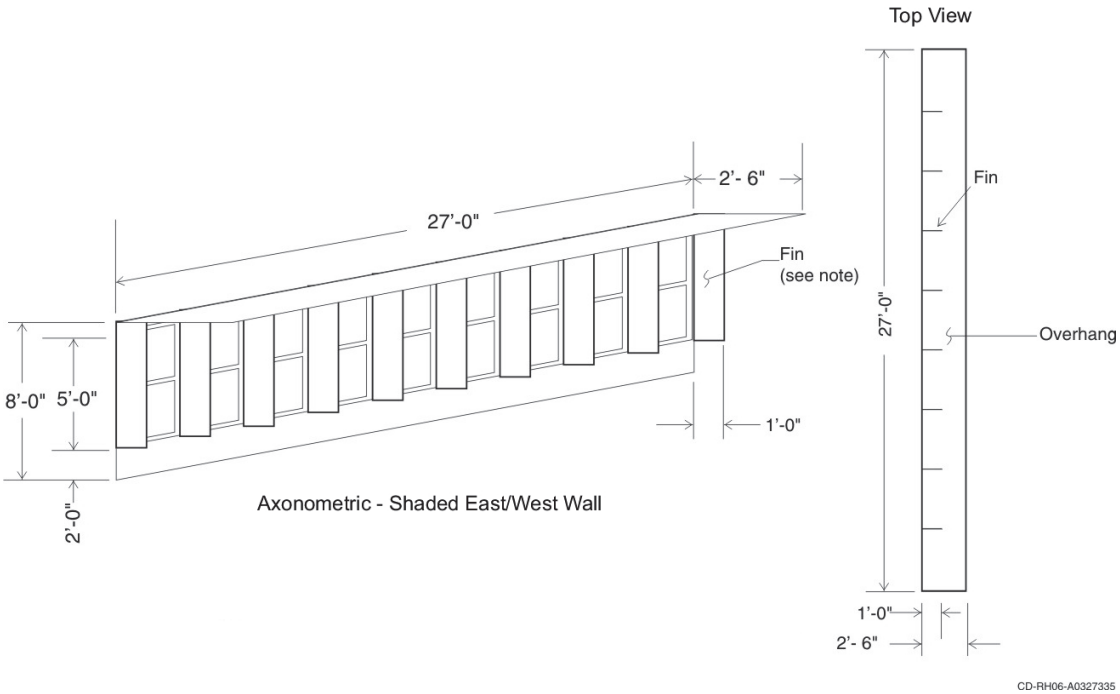

Note: Typical fin is 1 in. wide and 6 ft high. Plane of fin is perpendicular to plane of wall. Typical window module is as in Figure 7-8.

Figure 7-26 Overhang and fins for east and west windows—Case L165A.

Copyrighted material licensed to Sei Ito on 2020-06-26 for licensee's use only.
All rights reserved. No further reproduction or distribution is permitted. Distributed by Techstreet for ASHRAE, www.techstreet.com

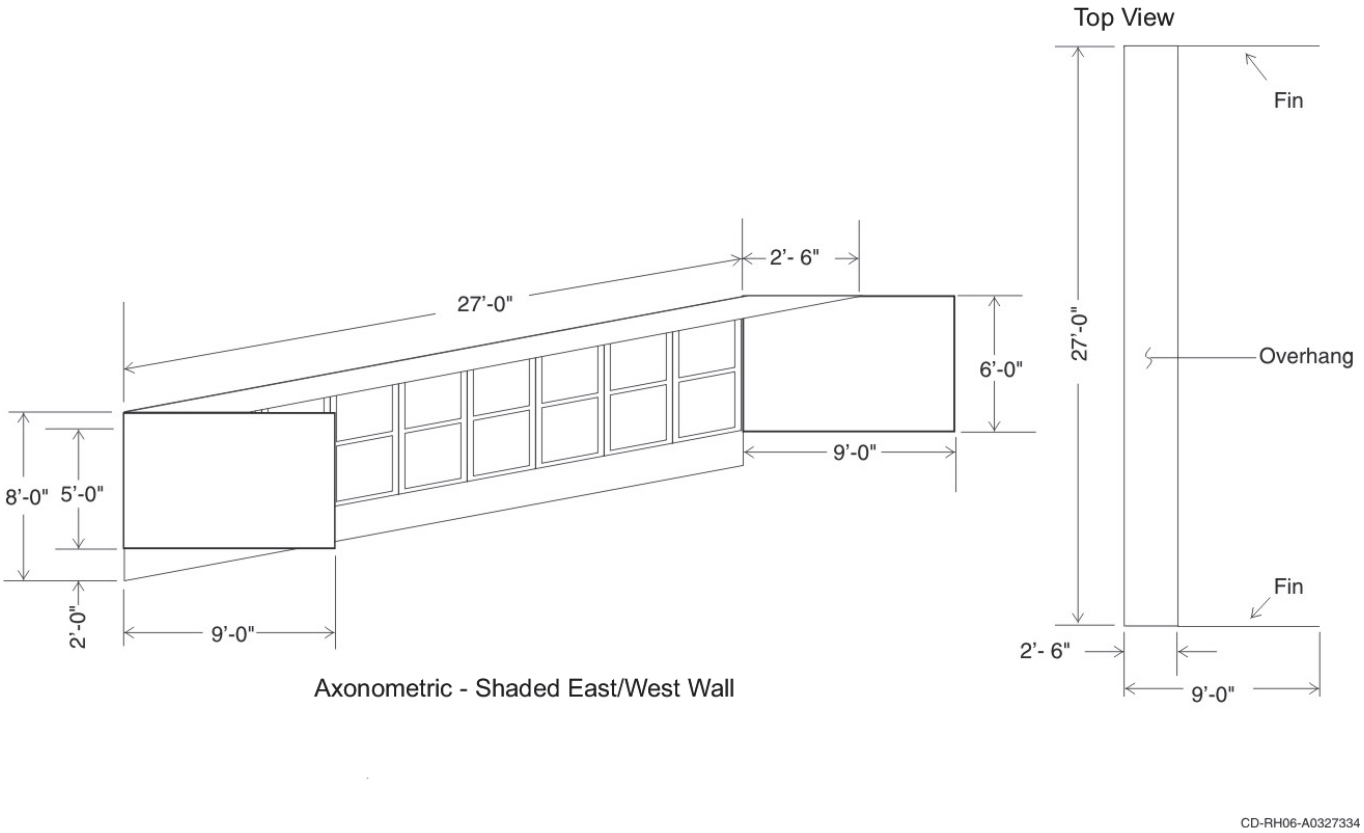

Note: Typical window module is as in Figure 7-8.

Figure 7-27 Overhang and fins for east and west windows alternate arrangement—Case L165A.
Informative Note: Figure 7-27 is informative material.

Copyrighted material licensed to Sei Ito on 2020-06-26 for licensee's use only.
All rights reserved. No further reproduction or distribution is permitted. Distributed by Techstreet for ASHRAE, www.techstreet.com

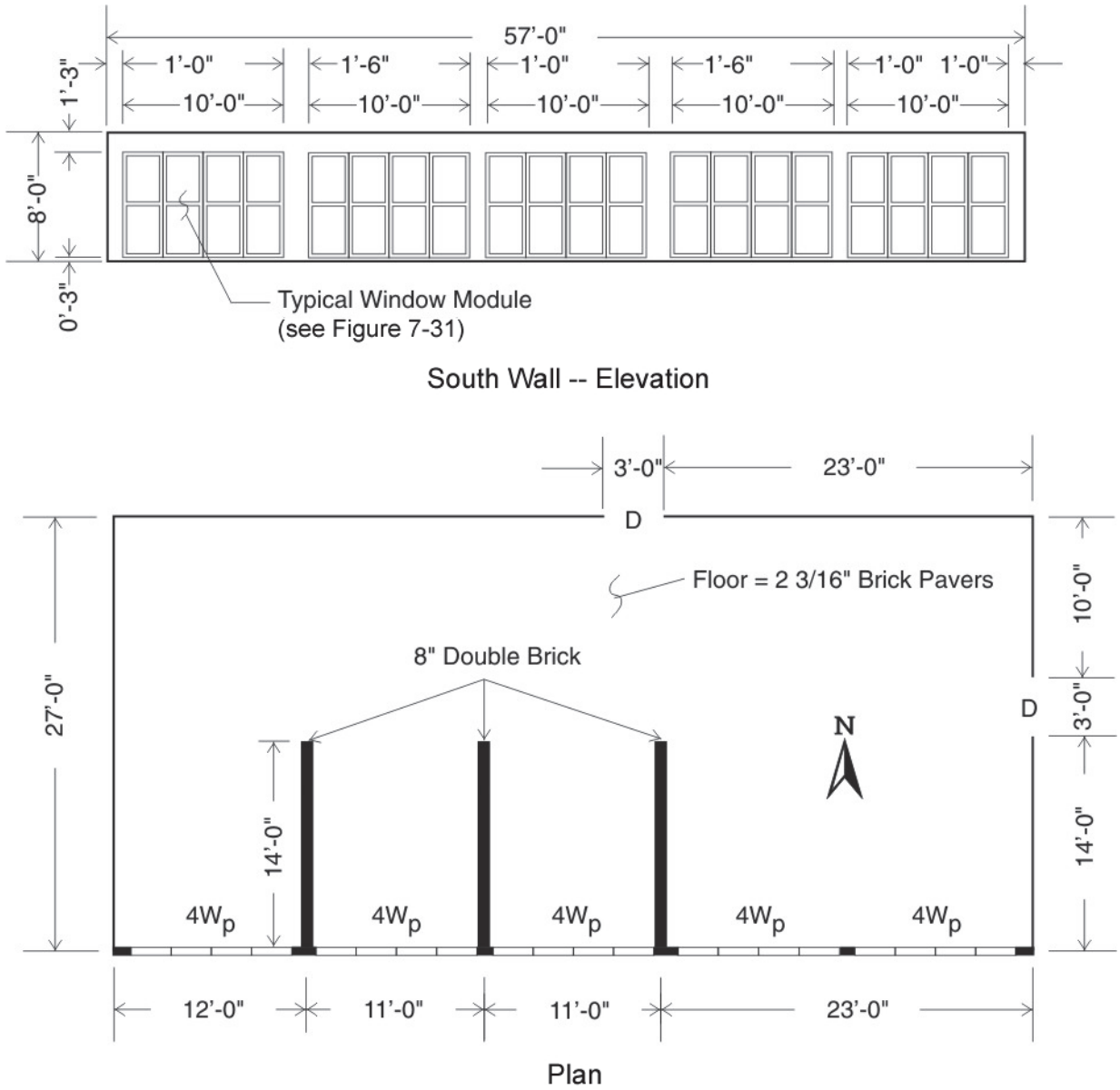

Legend:
#W_p:

W_p = window (2 ft. 6 in. wide × 6 ft 6 in. high), see Figure 7-31

= number of windows along given length of exterior wall

D = solid-core wood door (3 ft wide × 6 ft 8 in. high)

Note: 8 in. brick interior walls replace low-mass interior walls of Figure 7-2; all other interior walls of Figure 7-2 remain as is.

Figure 7-28 Window, door, and mass wall locations—Case P100A.

Copyrighted material licensed to Sei Ito on 2020-06-26 for licensee's use only.
All rights reserved. No further reproduction or distribution is permitted. Distributed by Techstreet for ASHRAE, www.techstreet.com

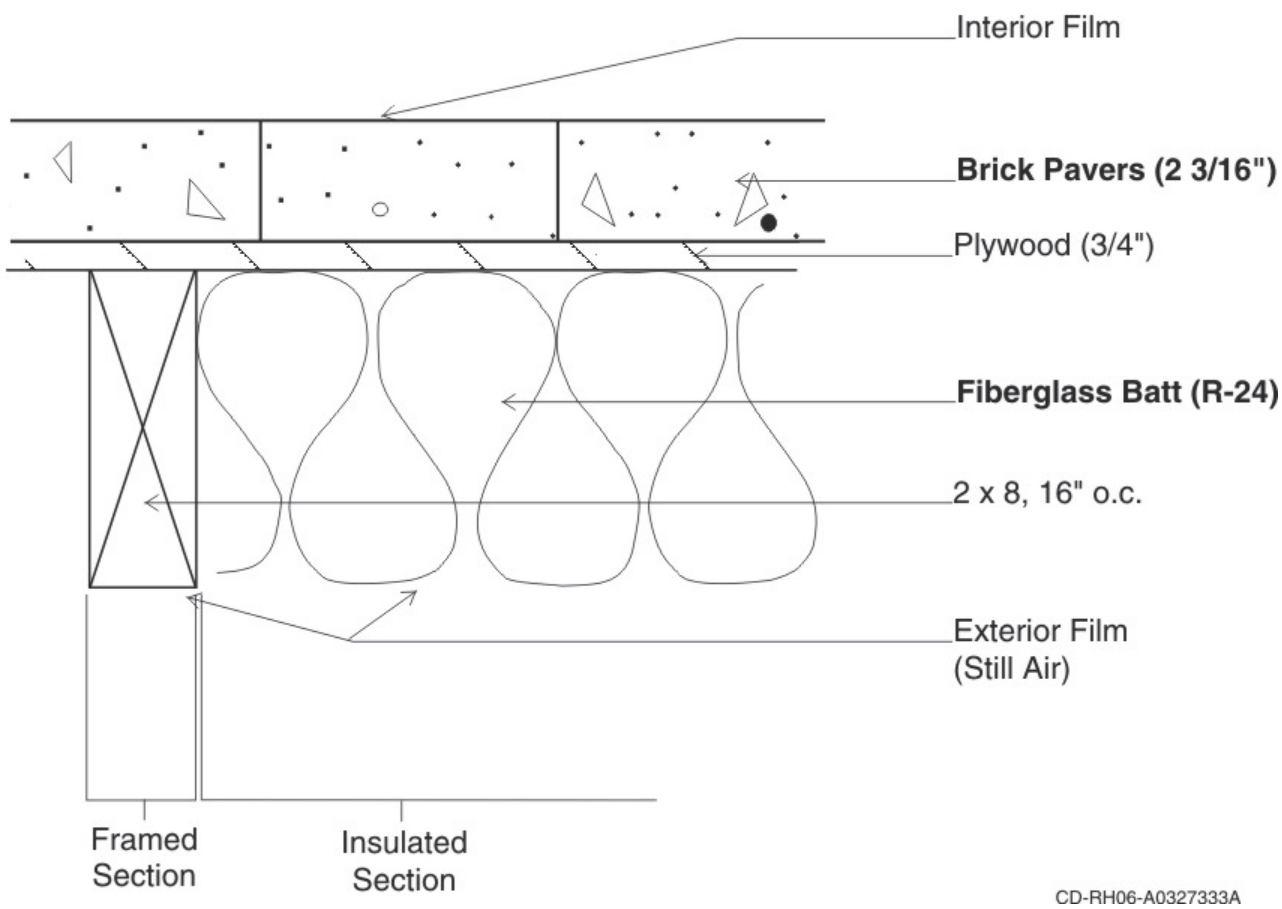

Note: Changes to Case L120A are highlighted with bold font.

Figure 7-29 Mass raised floor exposed to air, section—Case P100A.

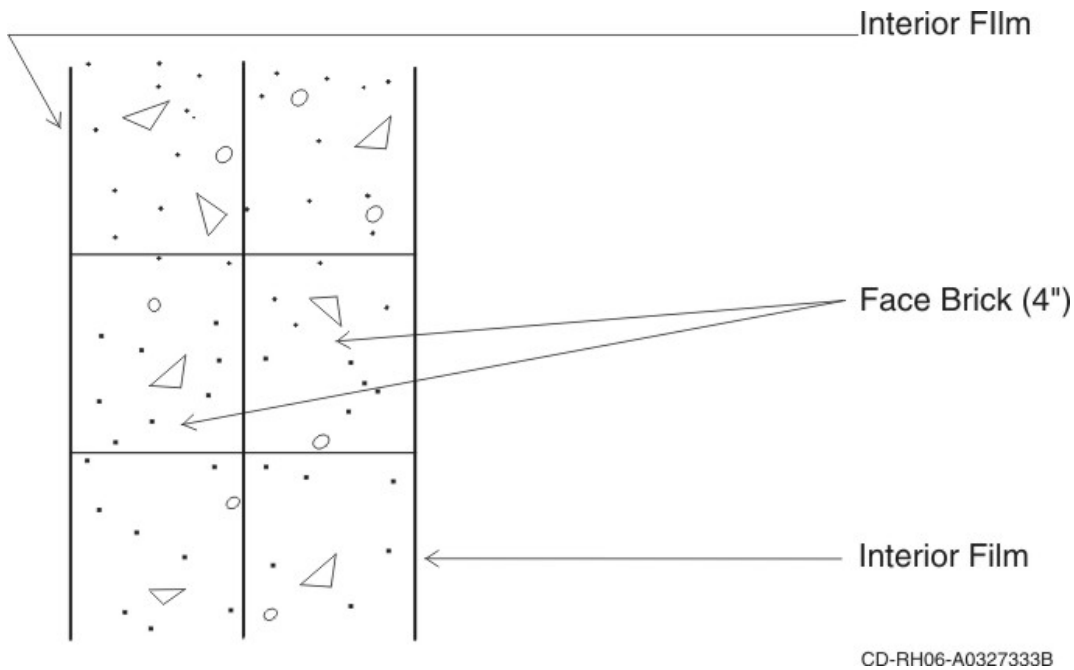

Figure 7-30 Interior mass wall section—Case P100A.

Copyrighted material licensed to Sei Ito on 2020-06-26 for licensee's use only.
All rights reserved. No further reproduction or distribution is permitted. Distributed by Techstreet for ASHRAE, www.techstreet.com

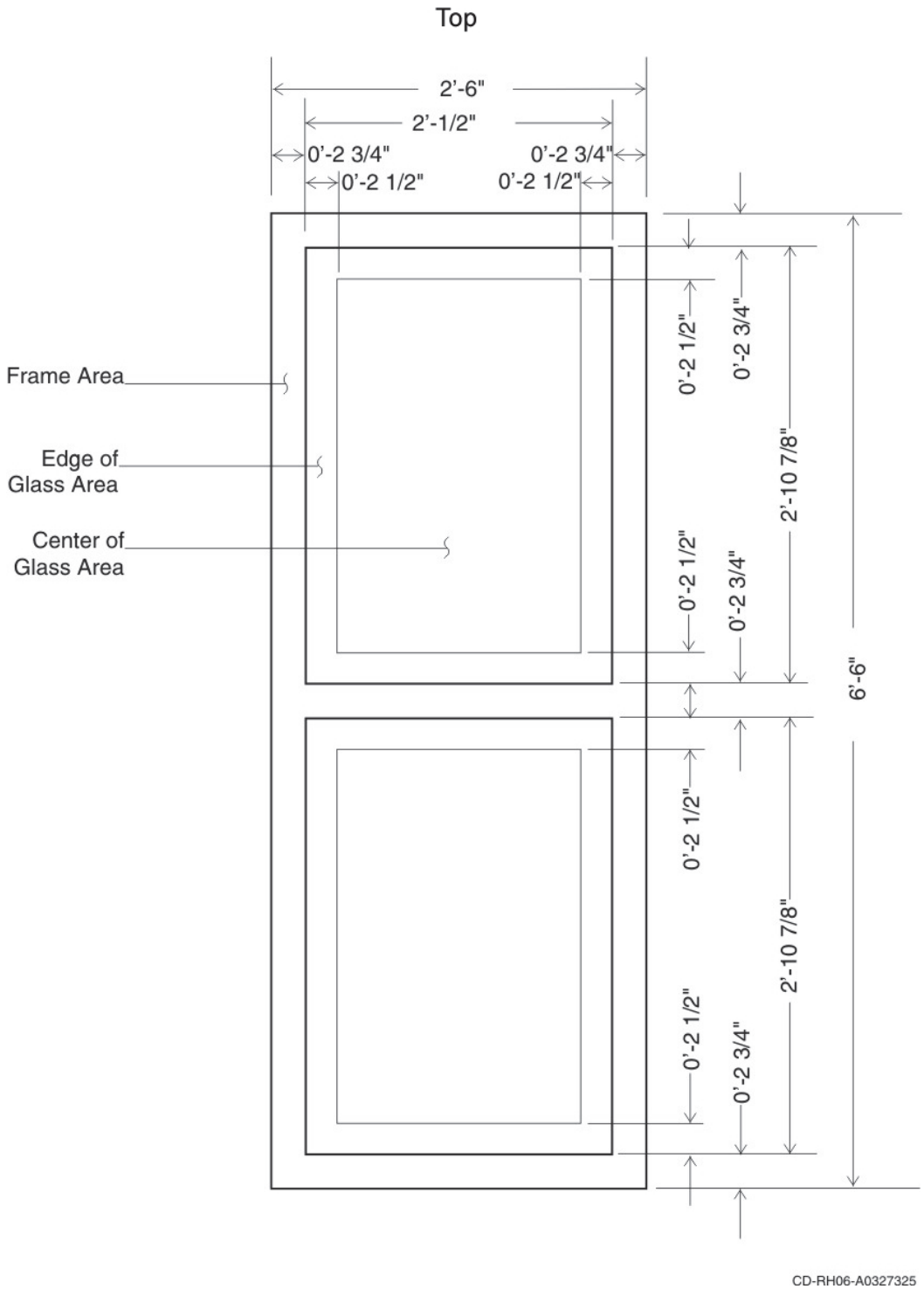

Figure 7-31 Window detail, vertical slider 30 in. wide by 78 in. high with 2 3/4 in. frame—Case P100A.

Copyrighted material licensed to Sei Ito on 2020-06-26 for licensee's use only.
All rights reserved. No further reproduction or distribution is permitted. Distributed by Techstreet for ASHRAE, www.techstreet.com

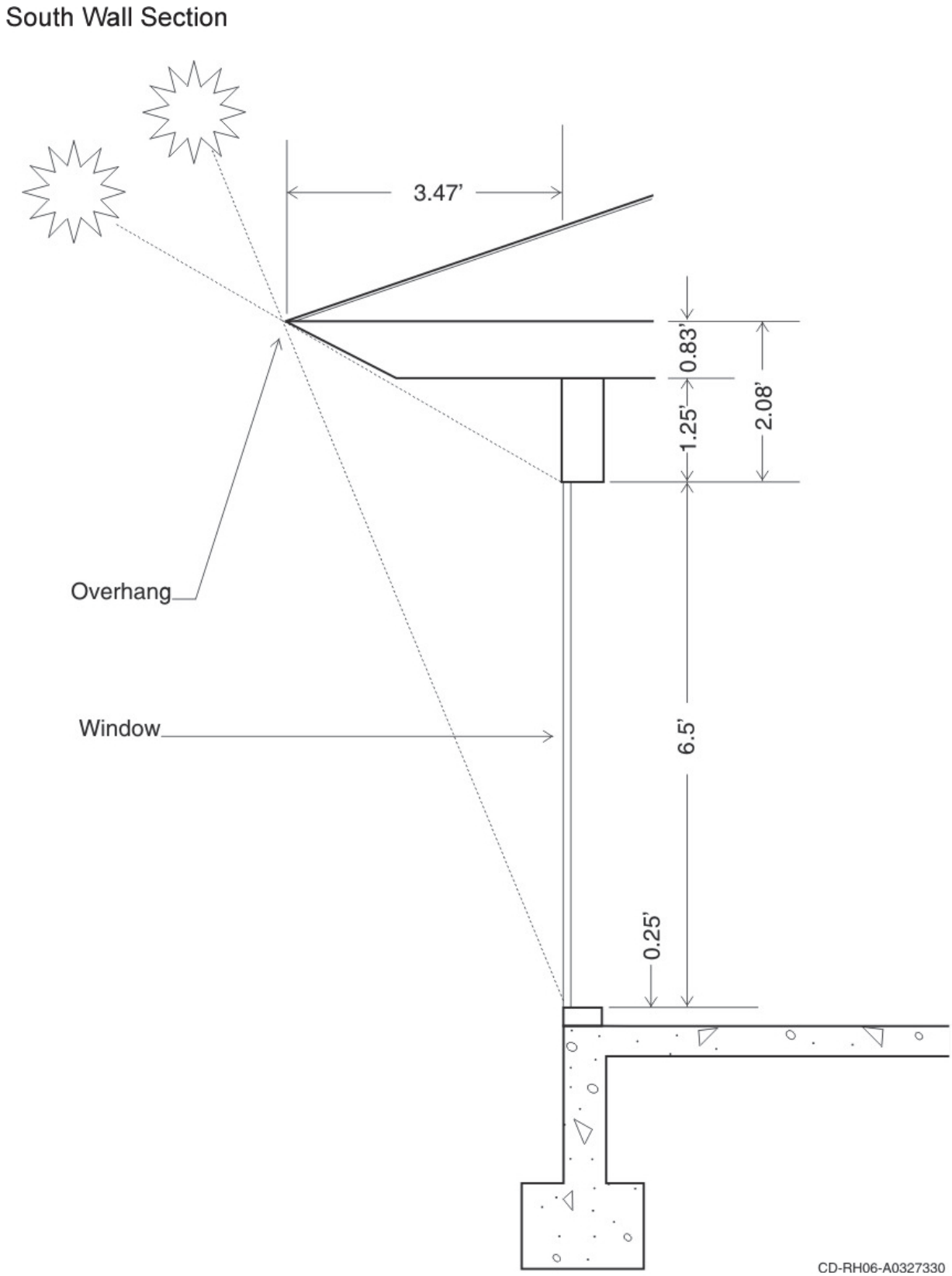

Notes: Overhang traverses entire length of south wall. Attic/roof geometry variation shown here is only for the purpose of locating the overhang. Thermal modeling of the attic/roof assembly remains as in Case LI20A.

Figure 7-32 South overhang—Case P105A.

Copyrighted material licensed to Sei Ito on 2020-06-26 for licensee's use only.
All rights reserved. No further reproduction or distribution is permitted. Distributed by Techstreet for ASHRAE, www.techstreet.com

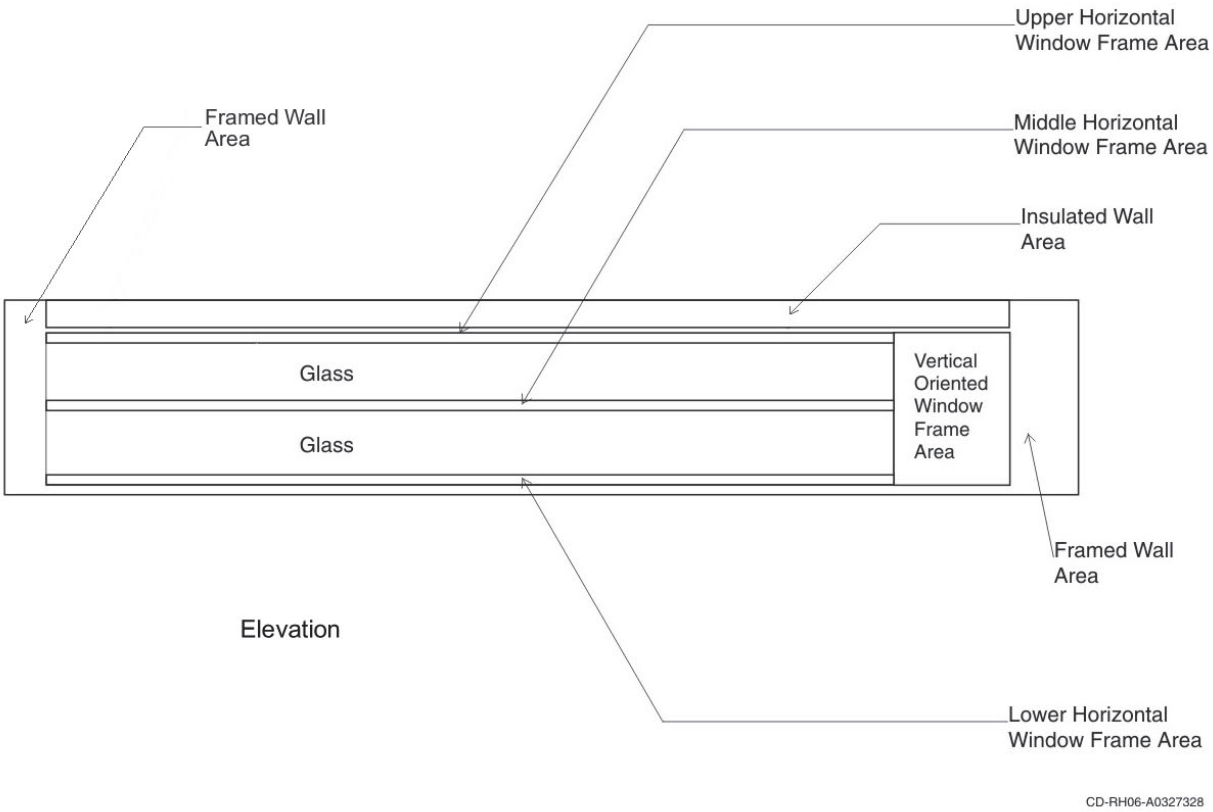

Figure 7-33 Example model of south wall for simulating south overhang effect in Case P105A.
Informative Note: Figure 7-33 is informative material.

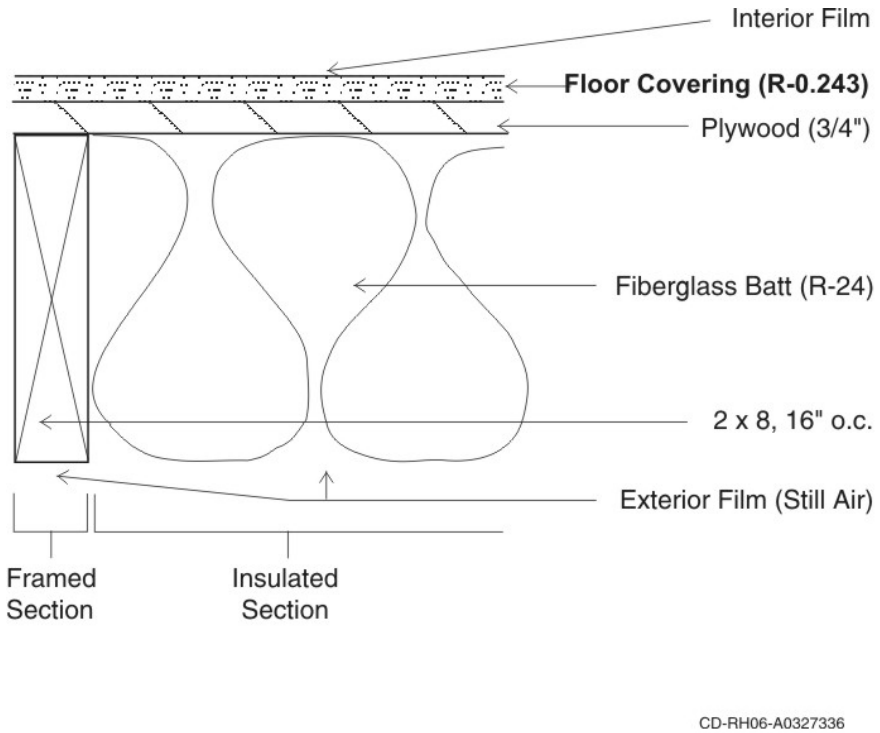

Note: Changes to Case P100A are highlighted with bold font.

Figure 7-34 Raised floor exposed to air, section—Case P110A.

Copyrighted material licensed to Sei Ito on 2020-06-26 for licensee's use only.
All rights reserved. No further reproduction or distribution is permitted. Distributed by Techstreet for ASHRAE, www.techstreet.com

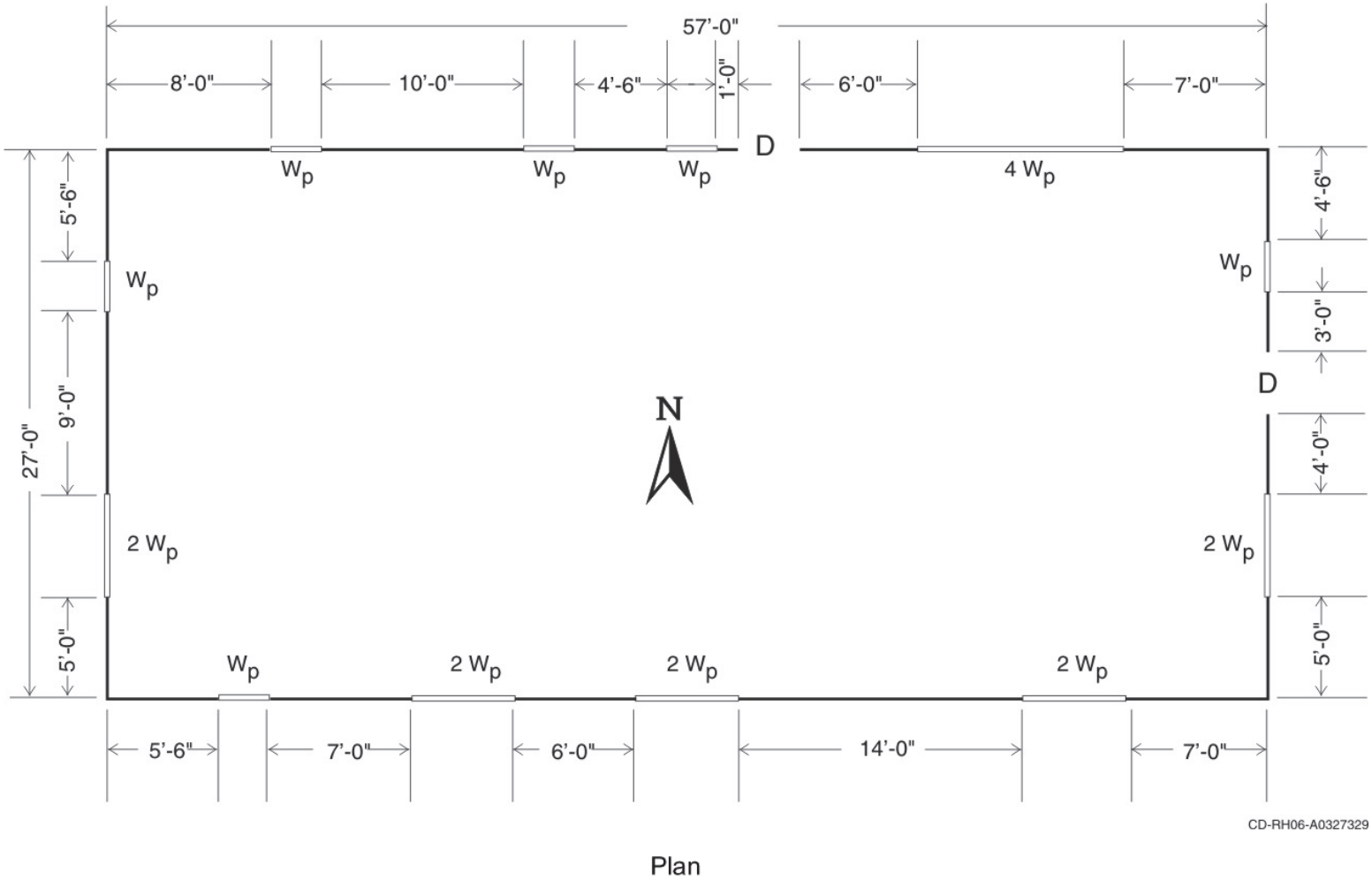

Plan

Note: Interior wall locations are same as for Case P100A.

Legend:
#W_p:
W_p = window (2 ft 6 in. wide × 6 ft 6 in. high); see Figure 7-31
# = number of windows along given length of exterior wall
D = solid-core wood door (3 ft wide × 6 ft 8 in. high)

Figure 7-35 Window locations—Case P150A.

Copyrighted material licensed to Sei Ito on 2020-06-26 for licensee's use only.
All rights reserved. No further reproduction or distribution is permitted. Distributed by Techstreet for ASHRAE, www.techstreet.com

Table 7-1 Building Thermal Summary—Case L100A

ELEMENT	AREA	R	U	UA	HEATCAP
	ft^2	$h \cdot ft^2 \cdot °F/Btu$	$Btu/(h \cdot ft^2 \cdot °F)$	$Btu/(h \cdot °F)$	Btu/°F
		(Note 1)	(Note 1)	(Note 1)	(Note 2)
Exterior walls (Note 3)	1034	11.76	0.085	87.9	1383
North windows (Note 4)	90	0.96	1.039	93.5	
East windows (Note 4)	45	0.96	1.039	46.7	
West windows (Note 4)	45	0.96	1.039	46.7	
South windows (Note 4)	90	0.96	1.039	93.5	
Doors	40	3.04	0.329	13.2	62
Ceiling/attic/roof (Note 5)	1539	20.48	0.049	75.1	1665
Floor (Note 5)	1539	14.15	0.071	108.8	1471
Infiltration (Note 6)					
Colorado Springs, CO (Colorad.TMY)				118.2	
Las Vegas, NV (Lasvega.TMY)				136.9	
Interior walls	1024				1425
TOTAL BUILDING					6006
Excluding infiltration				565.5	
Including infiltration (Colorado Springs, CO)				683.7	
Including infiltration (Las Vegas, NV)				702.4	

WINDOW SUMMARY: SINGLE PANE, ALUMINUM FRAME WITH THERMAL BREAK

(Note 7)	AREA	U	SHGC	TRANS.	SC
	ft^2	$Btu/(h \cdot ft^2 \cdot °F)$	(dir. nor.)	(dir. nor.)	
		(Note 1)	(Note 8)	(Note 9)	(Note 10)
Glass pane	10.96	1.064	0.857	0.837	1.000
Aluminum sash with thermal break	4.04	0.971			
Window, composite	15.00	1.039	0.670	0.612	0.781

Note 1: Includes interior and exterior surface coefficients.

Note 2: Heat capacity includes building mass within the thermal envelope (e.g., insulation and insulation thickness of structural framing are included; exterior siding and roof/attic mass are excluded).

Note 3: Excludes area of windows and doors. ASHRAE framed area fraction of 0.25 is assumed for 2×4 16 in. O.C. construction.

Note 4: Window area and other properties are for glass and frame combined. The accompanying window summary disaggregates glass and frame properties for a single window unit. North and south walls contain six window units each; east and west walls contain three window units each.

Note 5: ASHRAE roof/ceiling framing area fraction of 0.1 applied to both ceiling and floor.

Note 6: Infiltration UA = (infiltration mass flow) × (specific heat). Assumes air properties: specific heat = 0.240 Btu/(lb·°F); density = 0.075 lb/ft^3 at sea level, adjusted for altitude per Informative Annex B3, Section B3.2. The following values were used to obtain infiltration UA:

LOCATION	ACH	VOLUME	ALTITUDE	UA_{inf}
		ft^3	ft	Btu/(h·°F)
Colorado Springs	0.67	12312	6145	118.2
Las Vegas	0.67	12312	2178	136.9

Note 7: These data summarize one complete window unit per detailed description of Figure 7-8 and Tables 7-10 through 7-12.

Note 8: SHGC is the solar heat gain coefficient that includes the inward flowing fraction of absorbed direct normal solar radiation in addition to direct normal transmittance. For more detail, see *ASHRAE Handbook—Fundamentals*, Chapter 27 (Reference B-26).

Note 9: "TRANS." is the direct normal transmittance.

Note 10: Shading coefficient (SC) is the ratio of direct normal SHGC for a specific glazing unit to direct normal SHGC for the WINDOW 4.1 reference glazing unit.

Copyrighted material licensed to Sei Ito on 2020-06-26 for licensee's use only. All rights reserved. No further reproduction or distribution is permitted. Distributed by Techstreet for ASHRAE, www.techstreet.com

Table 7-2 Other Building Details—Case L100A

	CONDITIONED ZONE		ATTIC (UNCONDITIONED)	
AIR VOLUME, ft^3	12312		3463	
INFILTRATION	ACH	CFM	ACH	CFM
Tools with automatic altitude adjustment	0.670	137.5	2.400	138.5
Tools with site fixed at sea level (Note 1)				
Colorado Springs, CO	0.533	109.4	1.910	110.2
Las Vegas, NV	0.618	126.8	2.213	127.7
INTERNAL GAINS	SENSIBLE	LATENT	SENSIBLE	LATENT
Daily internal gains (Btu/day)	56105	12156	0.0	0.0
(see Table 7-9 for hourly profile)				
COMBINED RADIATIVE AND CONVECTIVE SURFACE (FILM) COEFFICIENTS				
(Note 2)	EXTERIOR FILM U-VALUE		INTERIOR FILM U-VALUE	
	Btu/(h·ft^2·°F)		Btu/(h·ft^2·°F)	
Walls and doors	5.748		1.460	
Ceiling	n/a		1.307	
Roof	5.748		1.330	
Raised floor exposed to air	2.200		1.307	
Window	4.256		1.460	
Window frame	4.256		1.460	
SURFACE RADIATIVE PROPERTIES	EXTERIOR		INTERIOR	
Shortwave (visible and UV) absorptance	0.600		0.600	
Longwave (infrared) emittance	0.900		0.900	

Note 1: Informative Annex B3 describes the algorithm used for adjusting infiltration rates if the software being tested does not account for variation of air density with altitude (i.e., site fixed at sea level).

Note 2: More information about combined surface coefficients is included in Informative Annexes B4 and B5.

Copyrighted material licensed to Sei Ito on 2020-06-26 for licensee's use only. All rights reserved. No further reproduction or distribution is permitted. Distributed by Techstreet for ASHRAE, www.techstreet.com

Table 7-3 Component Surface Areas and Solar Fractions—Case L100A

ELEMENT	HEIGHT or LENGTH ft	WIDTH ft	MULTIPLIER	AREA ft^2	INSIDE SOLAR FRACTION	
EXTERIOR NORTH/SOUTH WALLS					(Note 1)	
Gross wall	8.0	57.0	1.0	456.0		
Gross window	5.0	3.0	6.0	90.0		
Window frame only				24.2	0.0031	
Door	6.67	3.0	1.0	20.0	0.0026	
Net wall (Note 2)				346.0		
Insulated wall (Note 2)				259.5	0.0332	
Framed wall (Note 2)				86.5	0.0111	
EXTERIOR EAST/WEST WALLS						
Gross wall	8.0	27.0	1.0	216.0		
Gross window	5.0	3.0	3.0	45.0		
Window frame only				12.1	0.0016	
Net wall (Note 2)				171.0		
Insulated wall (Note 2)				128.3	0.0164	
Framed wall (Note 2)				42.8	0.0055	
INTERIOR WALLS						
Gross wall (Note 3)	8.0	128.0		1024.0		
Unframed wall (Note 3)				921.6	0.1179	
Framed wall (Note 3)				102.4	0.0131	
FLOOR/CEILING						
Gross floor/ceiling	57.0	27.0	1.0	1539.0		
Insulated floor/ceiling (Note 4)				1385.1	0.1772	
Framed floor/ceiling (Note 4)				153.9	0.0197	
ROOF						
Roof deck (Note 5)	57.0	14.2	2.0	1622.2		
Attic east/west gable (Note 6)	4.5	27.0	2.0	121.5		
TRANSMITTED SOLAR, INTERIOR DISTRIBUTION SUMMARY						
Total opaque interior surface area (Note 7)				6272.7	0.8024	
Solar to air (or low mass furnishings)					0.1750	(Note 8)
Solar lost (back out through windows)					0.0226	(Note 9)

Note 1: Solar energy transmitted through windows is assumed as distributed to interior opaque surfaces in proportion to their areas. Only the radiation not directly absorbed by lightweight furnishings (assumed to exist only for the purpose of calculating inside solar fraction) or not lost back out through windows is distributed to interior opaque surfaces.

Note 2: Net wall area is gross wall area less the rough opening areas of the windows and door. Insulated and framed exterior wall sections are defined in Figure 7-4. ASHRAE framed area fraction of 0.25 is assumed for 2×4 16 in. O.C. construction.

Note 3: Width is the total length of all interior walls. Framed wall area is assumed to be 10% of gross wall area for 2×4 16 in. O.C. framing. Only one side of the wall is considered for listed area. This area is multiplied by 2 for determining solar fractions. Solar fractions shown are for just one side of the interior wall.

Note 4: Insulated and framed floor and ceiling sections are defined in Figures 7-5 and 7-6, respectively. ASHRAE roof/ceiling framing area fraction of 0.1 applied to both ceiling and floor.

Note 5: The multiplier accounts for both the northward and southward sloped portions of the roof deck.

Note 6: Gable area is calculated as a triangle. Multiplier accounts for east- and west-facing gable ends.

Note 7: Total area of just those surfaces to which an inside solar fraction is applied.

Note 8: Based on the midpoint of the range given by SUNCODE-PC User's Manual, pp. 2–16 (Reference B-24)

Note 9: Calculated using the algorithm described in Informative Annex B7, Section B7.2.

Copyrighted material licensed to Sei Ito on 2020-06-26 for licensee's use only. All rights reserved. No further reproduction or distribution is permitted. Distributed by Techstreet for ASHRAE, www.techstreet.com

Table 7-4 Material Descriptions Exterior Wall, Door, Window—CaseL100A

EXTERIOR WALL (inside to outside)						
	THICKNESS	R	U	k	DENSITY	c_p
ELEMENT	in.	h·ft²·°F/Btu	Btu/(h·ft²·°F)	Btu/(h·ft·°F)	lb/ft³	Btu/(lb·°F)
Interior surface coefficient		0.685	1.460			
Plasterboard	0.5	0.450	2.222	0.0926	50.0	0.26
Fiberglass batt (Note 1)	3.5	11.000	0.091	0.0265	0.6	0.20
Frame 2×4, 16 in. O.C. (Note 2)	3.5	4.373	0.229	0.0667	32.0	0.33
Fiberboard sheathing	0.5	1.320	0.758	0.0316	18.0	0.31
Hardboard siding, 7/16 in.	0.44	0.670	1.492	0.0544	40.0	0.28
Exterior surface coefficient (Note 3)		0.174	5.748			
Total air-air, insulated section		14.299	0.070			
Total air-air, frame section		7.672	0.130			
Total air-air, composite section (Note 4)		11.760	0.085			
Total surf-surf, insulated section		13.440	0.074			
Total surf-surf, frame section		6.813	0.147			
Total surf-surf, composite section (Note 5)		10.901	0.092			
DOOR						
Solid core door	1.75	2.179	0.459	0.0669	32.0	0.33
Total air-air, door only (Note 6)		3.038	0.329			

WINDOW SUMMARY: SINGLE PANE, ALUMINUM FRAME WITH THERMAL BREAK							
(Note 7)	THICKNESS	AREA	R	U	SHGC	TRANS.	SC
	in.	ft²	h·ft²·°F/Btu	Btu/(h·ft²·°F)	(dir. nor.)	(dir. nor.)	
ELEMENT (Source)					(Note 8)	(Note 9)	(Note 10)
Interior surface coefficient, glass			0.685	1.460			
Interior surface coefficient, frame			0.685	1.460			
Glass pane	0.118	10.96	0.020	49.371	0.857	0.837	1.000
Aluminum sash with thermal break		4.04	0.110	9.096			
Exterior surface coefficient (Note 11)			0.235	4.256			
Window composite air-air		15.00	0.963	1.039	0.670	0.612	0.781

Note 1: Insulated section only; see Figure 7-4 for section view of wall.
Note 2: Framed section only; see Figure 7-4 for section view of wall.
Note 3: 10.7 mph wind speed and brick/rough plaster roughness assumed; see Informative Annexes B4 and B5 for more information about exterior film coefficients.
Note 4: Total composite R-values based on 75% insulated section 25% frame area section per ASHRAE. Thermal properties of windows and doors are not included in this composite calculation.
Note 5: Total surf-surf composite R-value is the total air-air composite R-value less the resistances due to the film coefficients.
Note 6: Door has same film coefficients as exterior wall.
Note 7: This section summarizes the detailed window description of Tables 7-10 through 7-12. Areas pertain to one complete window unit only (see Figure 7-8). If the software being tested is capable of modeling windows in greater detail than shown here, then use Tables 7-10 through 7-12.
Note 8: SHGC is the solar heat gain coefficient, which includes the inward flowing fraction of absorbed direct normal solar radiation in addition to direct normal transmittance. For more detail, see *ASHRAE Handbook—Fundamentals*, Chapter 27 (Reference B-26).
Note 9: "TRANS." is the direct normal transmittance.
Note 10: Shading coefficient (SC) is the ratio of direct normal SHGC for a specific glazing unit to direct normal SHGC for the WINDOW 4.1 reference glazing unit.
Note 11: Exterior surface coefficient is the same for both frame and glass; see Informative Annexes B4 and B5 for more about exterior film coefficients.

Copyrighted material licensed to Sei Ito on 2020-06-26 for licensee's use only. All rights reserved. No further reproduction or distribution is permitted. Distributed by Techstreet for ASHRAE, www.techstreet.com

Table 7-5 Material Descriptions, Raised Floor Exposed to Air—Case L100A

RAISED FLOOR EXPOSED TO AIR (inside to outside)						
	THICKNESS	R	U	k	DENSITY	c_p
ELEMENT	in.	h·ft^2·°F/Btu	Btu/(h·ft^2·°F)	Btu/(h·ft·°F)	lb/ft^3	Btu/(lb·°F)
Interior surface coefficient (Note 1)		0.765	1.307			
Carpet with fibrous pad (Note 2)		2.080	0.481			0.34
Plywood 3/4 in.	0.75	0.937	1.067	0.0667	34.0	0.29
Fiberglass batt (Note 3)	3.5	11.000	0.091	0.0265	0.6	0.20
Joists 2×8, 16 in. O.C. (Note 4)	3.5	4.373	0.229	0.0667	32.0	0.33
Exterior surface coefficient (Note 5)		0.455	2.200			
Total air-air, insulated section		15.237	0.066			
Total air-air, frame section		8.609	0.116			
Total air-air, composite section (Note 6)		14.148	0.071			
Total surf-surf, composite section (Note 7)		12.928	0.077			

Note 1: Average of ASHRAE heating and cooling coefficients.
Note 2: There is not enough information available for modeling thermal mass of carpet.
Note 3: Insulated sections only; see Figure 7-5 for section view of floor.
Note 4: Framed section only; see Figure 7-5 for section view of floor. For modeling purposes, thickness is the same as for insulation; remaining length is assumed to be at ambient air temperature and is not considered as thermal mass.
Note 5: Still air and brick/rough plaster roughness assumed; see Informative Annex B4 for exterior film coefficient as a function of wind speed and surface roughness. This coefficient is applied to the 1539 ft^2 floor area.
Note 6: ASHRAE roof/ceiling framing area fraction of 0.1 applied.
Note 7: Total air-air composite R-value less the film resistances.

Copyrighted material licensed to Sei Ito on 2020-06-26 for licensee's use only.
All rights reserved. No further reproduction or distribution is permitted. Distributed by Techstreet for ASHRAE, www.techstreet.com

Table 7-6 Material Descriptions, Ceiling, Attic, and Roof—Case L100A

CASE L100: CEILING/ATTIC/ROOF (inside to outside), attic as unconditioned zone						
(Note 1)	THICKNESS	R	U	k	DENSITY	c_p
ELEMENT	in.	h·ft^2·°F/Btu	Btu/(h·ft^2·°F)	Btu/(h·ft·°F)	lb/ft^3	Btu/(lb·°F)
CEILING (1539 ft^2 total area)						
Interior surface coefficient (Note 2)		0.765	1.307			
Plasterboard	0.5	0.450	2.222	0.0926	50.0	0.26
Fiberglass batt (Note 3)	6.25	19.000	0.053	0.0274	0.6	0.20
Joists 2×6, 24 in. O.C. (Note 4)	5.5	6.872	0.146	0.0667	32.0	0.33
Interior surface coefficient (Note 2)		0.765	1.307			
Total air-air, insulated section		20.980	0.048			
Total air-air, framed section		8.852	0.113			
Total air-air, composite section (Note 5)		18.452	0.054			
Total surf-surf, composite section (Note 5)		16.922	0.059			
END GABLES (121.5 ft^2 total area)						
Interior surface coefficient		0.685	1.460			
Plywood 1/2 in.	0.5	0.625	1.601	0.0667	34.0	0.29
Hardboard siding, 7/16 in.	0.44	0.670	1.492	0.0544	40.0	0.28
Exterior surface coefficient (Note 6)		0.174	5.748			
Total air-air		2.154	0.464			
ROOF (1622 ft^2 total area)						
Interior surface coefficient (Note 7)		0.752	1.330			
Plywood 1/2 in.	0.5	0.625	1.601	0.0667	34.0	0.29
Asphalt shingle 1/4 in.	0.25	0.440	2.273	0.0473	70.0	0.30
Exterior surface coefficient (Note 6)		0.174	5.748			
Total air-air		1.991	0.502			
Total roof/gable UA, surf-surf (Note 8)		1711 Btu/(h·°F)				

Note 1: This table is for modeling the attic as a separate zone.
Note 2: Average of ASHRAE heating and cooling coefficients, horizontal surface.
Note 3: Insulated section only; see Figure 7-6 for section view of ceiling.
Note 4: Framed section only; see Figure 7-6 for section view of ceiling.
Note 5: Based on 10% frame area fraction per ASHRAE; applies to temperature difference between room air and attic air. The "composite surf-surf" R-value is the composite air-air R-value less the two interior film coefficient R-values.
Note 6: 10.7 mph wind speed and brick/rough plaster roughness assumed; see Informative Annex B4 for more about exterior film coefficients.
Note 7: Average for ASHRAE upward and downward heat flow through sloped surface, interpolated on cosine of roof pitch angle.
Note 8: Area weighted sum of plywood and asphalt shingle or wood siding material layers; does not include film coefficients. This value used for developing Table 7-7.

Copyrighted material licensed to Sei Ito on 2020-06-26 for licensee's use only.
All rights reserved. No further reproduction or distribution is permitted. Distributed by Techstreet for ASHRAE, www.techstreet.com

Table 7-7 Material Descriptions, Ceiling/Attic/Roof, Attic as Material Layer—Case L100A

COMPOSITE CEILING/ATTIC/ROOF (inside to outside)						
	THICKNESS	R	U	k	DENSITY	c_p
ELEMENT	in.	h·ft^2·°F/Btu	Btu/(h·ft^2·°F)	Btu/(h·ft·°F)	lb/ft^3	Btu/(lb·°F)
CEILING/ATTIC AIR (1539 ft^2 total area)						
Interior surface coefficient		0.765	1.307			
Plasterboard	0.5	0.450	2.222	0.0926	50.0	0.26
Fiberglass batt (Note 1)	6.25	19.000	0.053	0.0274	0.6	0.20
Joists 2×6, 24 in. O.C. (Note 2)	5.5	6.872	0.146	0.0667	32.0	0.33
Attic air space (Note 3)		1.550	0.645			
ROOF DECK AND GABLE PROPERTIES SCALED TO CEILING AREA, 1539 ft^2 (Note 4)						
Plywood 1/2 in.	0.5	0.515	1.940	0.0808	41.2	0.29
Hybrid shingle/siding (Note 5)	0.25	0.384	2.605	0.0543	84.8	0.30
Total roof deck/gable, surf-surf (Note 6)		0.899	1.112			
Exterior surface coefficient (Note 7)		0.144	6.967			
SUMMARY CEILING/ATTIC/ROOF						
Total air-air, insulated section		22.808	0.044			
Total air-air, framed section		10.679	0.094			
Total composite, air-air (Note 8)		20.482	0.049			
Total composite, surf-surf (Note 9)		19.573	0.051			

Note 1: Insulated section only; see Figure 7-6 for section view of ceiling/attic/roof.
Note 2: Framed section only; see Figure 7-6 for section view of ceiling/attic/roof.
Note 3: Average winter/summer values for natural ventilation (2.4 ach), R-19 ceiling insulation, ext abs = 0.6, includes interior films.
Note 4: Scaled properties are presented for use with ASHRAE equivalent attic air space R-value. U, R, and k are scaled on area, while density and specific heat are scaled on volume (area and thickness).
Note 5: This material layer combines roofing and end gable materials into one hybrid layer of material.
Note 6: Based on total roof/gable UA, surf-surf calculated in Table 7-6.
Note 7: Scaled to 1539 ft^2.
Note 8: (ceiling interior film coefficient) + (ceiling materials) + (attic as material layer) + (scaled roof deck/gable materials) + (scaled exterior film coefficient). Based on 90% insulated section and 10% frame section per ASHRAE.
Note 9: Based on total air-air R-value less R-values of interior film coefficient and scaled exterior film coefficient.

Copyrighted material licensed to Sei Ito on 2020-06-26 for licensee's use only.
All rights reserved. No further reproduction or distribution is permitted. Distributed by Techstreet for ASHRAE, www.techstreet.com

Table 7-8 Material Descriptions, Interior Wall—Case L100A

INTERIOR WALL						
	THICKNESS	R	U	k	DENSITY	c_p
ELEMENT (Source)	in.	$h \cdot ft^2 \cdot °F/Btu$	$Btu/(h \cdot ft^2 \cdot °F)$	$Btu/(h \cdot ft \cdot °F)$	lb/ft^3	$Btu/(lb \cdot °F)$
Interior surface coefficient		0.685	1.460			
Plasterboard	0.50	0.450	2.222	0.0926	50.0	0.26
Frame 2×4, 16 in. O.C. (Note 1)	3.50	4.373	0.229	0.0667	32.0	0.33
Plasterboard	0.50	0.450	2.222	0.0926	50.0	0.26
Interior surface coefficient		0.685	1.460			

Note 1: Frame 2×4 only applies to 10% of the interior wall area. Remaining area is air space that is disregarded.

Table 7-9 Internal Loads Schedule—Case L100A

	SENSIBLE LOAD	LATENT LOAD	HOUR OF DAY	SENSIBLE LOAD	LATENT LOAD
HOUR OF DAY	Btu	Btu		Btu	Btu
(Note 1)	(Note 2)	(Note 2)			
1	1139	247	13	1707	370
2	1139	247	14	1424	308
3	1139	247	15	1480	321
4	1139	247	16	1480	321
5	1139	247	17	2164	469
6	1903	412	18	2334	506
7	2391	518	19	2505	543
8	4782	1036	20	3928	851
9	2790	604	21	3928	851
10	1707	370	22	4101	888
11	1707	370	23	4101	888
12	2277	493	24	3701	802
			Totals	56105	12156

Note 1: Hour 1 = the interval from midnight to 1 A.M.
Note 2: Includes all possible sources of internal gains; sensible loads are 70% radiative and 30% convective.

Copyrighted material licensed to Sei Ito on 2020-06-26 for licensee's use only.
All rights reserved. No further reproduction or distribution is permitted. Distributed by Techstreet for ASHRAE, www.techstreet.com

Table 7-10 Window Summary, Single-Pane Aluminum Frame with Thermal Breaks—Case L100A

PROPERTY	VALUE	UNITS	NOTES
GENERAL PROPERTIES			
Area, gross window	15.00	ft^2	(Note 1)
Width, frame	2.75	in.	
Area, frame	4.04	ft^2	
Area, edge of glass (EOG)	3.57	ft^2	
Area, center of glass (COG)	7.39	ft^2	
Area, net glass	10.96	ft^2	(Area,EOG + Area,COG)
OPTICAL PROPERTIES			
Absorptance, frame	0.60		
Transmittance, frame	0.00		
COG/EOG optical properties	(see Table 7-11)		(Note 2)
Solar heat gain coefficient (SHGC), gross window	0.670		(Note 3)
Shading coefficient (SC), gross window	0.781		(Note 3)
Dividers, curtains, blinds, and other obstructions in window	None		
THERMAL PROPERTIES (conductances/resistances include film coefficients)			
Conductance, frame (R-value)	0.971 1.030	$Btu/(h \cdot ft^2 \cdot °F)$ $h \cdot ft^2 \cdot °F/Btu$	Aluminum frame with thermal break (Note 4)
Conductance, edge of glass (R-value)	1.064 0.940	$Btu/(h \cdot ft^2 \cdot °F)$ $h \cdot ft^2 \cdot °F/Btu$	
Conductance, COG (R-value)	1.064 0.940	$Btu/(h \cdot ft^2 \cdot °F)$ $h \cdot ft^2 \cdot °F/Btu$	
Conductance, net glass (R-value)	1.064 0.940	$Btu/(h \cdot ft^2 \cdot °F)$ $h \cdot ft^2 \cdot °F/Btu$	(Note 5)
Conductance, gross window (R-value)	1.039 0.963	$Btu/(h \cdot ft^2 \cdot °F)$ $h \cdot ft^2 \cdot °F/Btu$	(Note 6)
COMBINED SURFACE COEFFICIENT CONDUCTANCES			
Exterior surf coefficient, glass and frame	4.256	$Btu/(h \cdot ft^2 \cdot °F)$	Based on output of WINDOW 4.1
Interior surface coefficient, glass	1.460	$Btu/(h \cdot ft^2 \cdot °F)$	Based on output of WINDOW 4.1
Interior surface coefficient, frame	1.460	$Btu/(h \cdot ft^2 \cdot °F)$	From ASHRAE (Note 7)

Note 1: Area for one representative window unit. See Figure 7-8 for a schematic representation of frame, center-of- glass (COG) and edge-of-glass (EOG) areas; dimensions are based on an NFRC size AA vertical slider. Gross window area is the sum of frame, COG, and EOG areas.

Note 2: Edge-of-glass optical properties are the same as the center-of-glass properties. Table 7-12 gives optical properties as a function of incidence angle.

Note 3: These are the overall window (including COG, EOG, and frame) properties for direct normal solar radiation.

Note 4: The frame conductance presented here is based on the ASHRAE value for operable one-pane window with aluminum frame with thermal break adjusted for the exterior surface coefficients also shown in this table. Material properties for dynamic modeling of window frames (density, specific heat, etc.) are not given.

Note 5: Net glass conductance includes only the COG and EOG portions of the window.

Note 6: Gross window conductance includes the frame, EOG, and COG portions of the window.

Note 7: See Informative Annex B5, Section B5.3.

Copyrighted material licensed to Sei Ito on 2020-06-26 for licensee's use only. All rights reserved. No further reproduction or distribution is permitted. Distributed by Techstreet for ASHRAE, www.techstreet.com

Table 7-11 Glazing Summary, Single-Pane Center-of-Glass (COG) Values—Case L100A

PROPERTY	VALUE	UNITS
GENERAL PROPERTIES		
Number of panes	1	
Pane thickness	0.118	in.
SINGLE-PANE OPTICAL PROPERTIES	(Note 1)	
Transmittance	0.837	
Reflectance	0.075	
Absorptance	0.088	
Index of refraction	1.5223	
Extinction coefficient	0.7806	/in.
Solar heat gain coefficient (SHGC)	0.857	
Shading coefficient (SC)	1.000	
Optical properties as a function of incident angle	(See Table 7-12)	
THERMAL PROPERTIES		
Conductivity of glass	0.520	Btu/(h·ft·°F)
Conductance of glass pane (R-value)	52.881 0.019	Btu/(h·ft^2·°F) h·ft^2·°F/Btu
Exterior combined surface coefficient (R-value)	4.256 0.235	Btu/(h·ft^2·°F) h·ft^2·°F/Btu
Interior combined surface coefficient (R-value)	1.460 0.685	Btu/(h·ft^2·°F) h·ft^2·°F/Btu
U-value from interior air to ambient air (R-value)	1.064 0.940	Btu/(h·ft^2·°F) h·ft^2·°F/Btu
Hemispherical infrared emittance	0.84	
Infrared transmittance	0	
Density of glass	154	lb/ft^3
Specific heat of glass	0.18	Btu/(lb·°F)

Note 1: Optical properties listed in this table are for direct normal radiation.

Table 7-12 Optical Properties as a Function of Incidence Angle for Single-Pane Glazing—Case L100A

	PROPERTIES (Notes 1, 2)			
ANGLE	TRANS.	REFL.	ABS.	SHGC
0	0.837	0.075	0.088	0.857
10	0.836	0.075	0.089	0.857
20	0.835	0.075	0.090	0.856
30	0.830	0.077	0.093	0.852
40	0.821	0.083	0.097	0.843
50	0.800	0.099	0.101	0.823
60	0.752	0.143	0.105	0.776
70	0.639	0.253	0.108	0.664
80	0.390	0.505	0.105	0.414
90	0.000	1.000	0.000	0.000
Hemis.	0.756	0.136	0.098	0.779

Note 1: "TRANS." = Transmittance, "REFL." = Reflectance, "ABS." = Absorptance, SHGC = solar heat gain coefficient, and "Hemis." = Hemispherically integrated property.
Note 2: Output is from WINDOW 4.1 for the following properties at direct normal incidence: transmittance = 0.837, reflectance = 0.075. SHGC accounts for surface coefficients and is based on wind speed = 10.7 mph.

Copyrighted material licensed to Sei Ito on 2020-06-26 for licensee's use only.
All rights reserved. No further reproduction or distribution is permitted. Distributed by Techstreet for ASHRAE, www.techstreet.com

Table 7-13 Conditioned Zone Infiltration for Case L110A

INFILTRATION ALGORITHM	ACH	CFM
With automatic altitude adjustment	1.5	307.8
With site fixed at sea level		
Colorado Springs, CO	1.194	244.9
Las Vegas, NV	1.383	283.9

Table 7-14 Building Thermal Summary—Case L120A

ELEMENT	AREA ft^2	R $h \cdot ft^2 \cdot °F/Btu$	U $Btu/(h \cdot ft^2 \cdot °F)$	UA $Btu/(h \cdot °F)$	HEATCAP $Btu/°F$
(Note 1)		(Note 2)	(Note 2)	(Note 2)	(Note 3)
Exterior walls (Note 4)	1034	**23.58**	**0.042**	**43.8**	**1749**
North windows	90	0.96	1.039	93.5	
East windows	45	0.96	1.039	46.7	
West windows	45	0.96	1.039	46.7	
South windows	90	0.96	1.039	93.5	
Doors	40	3.04	0.329	13.2	62
Ceiling/attic/roof (Note 5)	1539	**59.53**	**0.017**	**25.9**	**1850**
Floor (Note 5)	1539	14.15	0.071	108.8	1471
Infiltration					
Colorado Springs, CO				118.2	
Las Vegas, NV				136.9	
Interior walls	1024				1425
TOTAL BUILDING					**6556**
Excluding infiltration				**472.1**	
Including infiltration (Colorado Springs, CO)				**590.3**	
Including infiltration (Las Vegas, NV)				**609.1**	

Note 1: Changes to Case L100A are highlighted by bold font.
Note 2: Includes interior and exterior surface coefficients.
Note 3: Heat capacity includes building mass within the thermal envelope (e.g., insulation and insulation thickness of structural framing are included; exterior siding and roof/attic mass are excluded).
Note 4: Excludes window and door area. ASHRAE framed area fraction of 0.22 used for 2×6 24 in. O.C. construction.
Note 5: ASHRAE roof/ceiling framing area fraction of 0.1 used for both ceiling and floor.

Table 7-15 Component Surface Areas and Solar Fractions—Case L120A

ELEMENT	AREA	INSIDE SOLAR FRACTION
(Note 1)	ft^2	
EXTERIOR NORTH/SOUTH WALLS		(Note 2)
Net Wall (Note 3)	346.0	
Insulated wall (Note 4)	**269.9**	**0.0345**
Framed wall (Note 4)	**76.1**	**0.0097**
EXTERIOR EAST/WEST WALLS		
Net Wall (Note 3)	171.0	
Insulated wall (Note 4)	**133.4**	**0.0171**
Framed wall (Note 4)	**37.6**	**0.0048**

Note 1: Changes to Case L100A are highlighted by bold font. All other surface areas remain as in Case L100A.
Note 2: Solar energy transmitted through windows is assumed as distributed to interior opaque surfaces in proportion to their areas. Only the radiation not directly absorbed by lightweight furnishings (assumed to exist only for the purpose of calculating inside solar fraction) or lost back out through windows is distributed to interior opaque surfaces.
Note 3: Net wall area is the gross wall area less the rough opening areas of the windows and door.
Note 4: Insulated and framed exterior wall sections are defined in Figure 7-9. ASHRAE framed area fraction of 0.22 is assumed for 2×6 24 in. O.C. construction.

Copyrighted material licensed to Sei Ito on 2020-06-26 for licensee's use only. All rights reserved. No further reproduction or distribution is permitted. Distributed by Techstreet for ASHRAE, www.techstreet.com

Table 7-16 Material Descriptions, Exterior Wall—Case L120A

EXTERIOR WALL (inside to outside)						
ELEMENT (Source)	THICKNESS	R	U	k	DENSITY	c_p
(Note 1)	in.	h·ft^2·°F/Btu	Btu/(h·ft^2·°F)	Btu/(h·ft·°F)	lb/ft^3	Btu/(lb·°F)
Interior surface coefficient		0.685	1.460			
Plasterboard	0.5	0.450	2.222	0.0926	50.0	0.26
Fiberglass batt (Note 2)	**5.5**	**18.000**	**0.056**	**0.0255**	**0.68**	0.20
Frame 2×6 24 in. O.C. (Note 3)	**5.5**	**6.872**	**0.146**	0.0667	32.0	0.33
Isocyanurate board insulation	**1.0**	**7.200**	**0.139**	**0.0116**	**2.0**	**0.22**
Hardboard siding, 7/16 in.	0.44	0.670	1.492	0.0544	40.0	0.28
Exterior surface coefficient		0.174	5.748			
Total air-air, insulated section		**27.179**	**0.037**			
Total air-air, frame section		**16.051**	**0.062**			
Total air-air, composite section (Note 4)		**23.582**	**0.042**			
Total surf-surf, insulated section		**26.320**	**0.038**			
Total surf-surf, frame section		**15.192**	**0.066**			
Total surf-surf, composite section (Note 5**)**		**22.723**	**0.044**			

Note 1: Changes to Case L100A are highlighted in bold font.
Note 2: Insulated section only; see Figure 7-9 for wall section view. Properties adjusted for compression of batt into cavity.
Note 3: Framed section only; see Figure 7-9 for section view of wall.
Note 4: Total composite R-values from 78% insulated section, 22% framed section per ASHRAE. Thermal properties of windows and doors are not included in this composite calculation.
Note 5: Total surf-surf composite R-value is the total air-air composite R-value less the resistances due to the film coefficients.

Table 7-17 Material Descriptions, Ceiling—Case L120A

CEILING (inside to outside)						
ELEMENT	THICKNESS	R	U	k	DENSITY	c_p
(Note 1)	in.	h·ft^2·°F/Btu	Btu/(h·ft^2·°F)	Btu/(h·ft·°F)	lb/ft^3	Btu/(lb·°F)
CEILING (1539 ft^2 total area)						
Interior surface coefficient		0.765	1.307			
Plasterboard	0.5	0.450	2.222	0.0926	50.0	0.26
Fiberglass batt **(Note 2)**	6.25	19.000	0.053	0.0274	0.6	0.20
Joists 2×6 24 in. O.C. **(Note 3)**	5.5	6.872	0.146	0.0667	32.0	0.33
Fiberglass batt	**12.0**	**38.000**	**0.026**	**0.0263**	**0.6**	**0.20**
Interior surface coefficient		0.765	1.307			
Total air-air, insulated section		**58.980**	**0.017**			
Total air-air, framed section	(Note 4)	**46.852**	**0.021**			
Total air-air, composite section		**57.492**	**0.017**			
Total surf-surf, composite section	(Note 4)	**55.962**	**0.018**			

Note 1: Changes to Case L100A are highlighted with bold font. Use this table if attic modeled as separate zone.
Note 2: Insulated section only; **see Figure 7-10 for section view of ceiling.**
Note 3: Framed section only; **see Figure 7-10 for section view of ceiling.**
Note 4: Based on 90% insulated section and 10% frame section per ASHRAE; applies to temperature difference between room air and attic air. The "Composite surf-surf" R-value is the composite air-air R-value less the two interior film coefficient R-values.

Copyrighted material licensed to Sei Ito on 2020-06-26 for licensee's use only. All rights reserved. No further reproduction or distribution is permitted. Distributed by Techstreet for ASHRAE, www.techstreet.com

Table 7-18 Material Descriptions for Attic as Material Layer—Case L120A

COMPOSITE CEILING/ATTIC/ROOF (inside to outside)						
ELEMENT	THICKNESS	R	U	k	DENSITY	c_p
(Note 1)	in.	h·ft^2·°F/Btu	Btu/(h·ft^2·°F)	Btu/(h·ft·°F)	lb/ft^3	Btu/(lb·°F)
CEILING/ATTIC (1539 ft^2 total area)						
Interior surface coefficient		0.765	1.307			
Plasterboard	0.5	0.450	2.222	0.0926	50.0	0.26
Fiberglass batt **(Note 2)**	6.25	19.000	0.053	0.0274	0.6	0.20
Joists 2×6 24 in. O.C. **(Note 3)**	5.5	6.872	0.146	0.0667	32.0	0.33
Fiberglass batt	**12.0**	**38.000**	**0.026**	**0.0263**	**0.6**	**0.20**
Attic air space (Note 4)		**1.750**	**0.571**			
Total roof deck/gable, surf-surf (Note 5)		0.899	1.112			
Exterior surface coefficient (Note 6)		0.144	6.967			
SUMMARY CEILING/ATTIC/ROOF						
Total air-air, insulated section		**61.008**	**0.016**			
Total air-air, framed section		**48.879**	**0.020**			
Total air-air, composite section (Note 7)		**59.531**	**0.017**			
Total surf-surf, composite sec. (Note 8)		**58.622**	**0.017**			

Note 1: Changes to Case L100A are highlighted by bold font. Use this table if attic modeled as material layer.
Note 2: Insulated section only; **see Figure 7-10 for section view of ceiling**.
Note 3: Insulated section only; **see Figure 7-10 for section view of ceiling**.
Note 4: Average winter/summer values for natural vent (2.4 ach), R-30 ceiling insulation, ext abs = 0.6, includes interior films.
Note 5: From Table 7-7 (Case L100A).
Note 6: Scaled to 1539 ft^2.
Note 7: Based on 10% frame area fraction per ASHRAE; applies to temperature difference between room air and ambient air.
Note 8: Based on total air-air R-value less R-values of interior film coefficient and scaled exterior film coefficient.

Copyrighted material licensed to Sei Ito on 2020-06-26 for licensee's use only.
All rights reserved. No further reproduction or distribution is permitted. Distributed by Techstreet for ASHRAE, www.techstreet.com

Table 7-19 Building Thermal Summary—Case L130A

ELEMENT	AREA ft^2	R $h \cdot ft^2 \cdot °F/Btu$	U $Btu/(h \cdot ft^2 \cdot °F)$	UA $Btu/(h \cdot °F)$	HEATCAP Btu/°F
(Note 1)		(Note 2)	(Note 2)	(Note 2)	(Note 3)
Exterior walls (Note 4)	1034	11.76	0.085	87.9	1383
North windows (Note 5)	90	**3.33**	**0.300**	**27.0**	
East windows (Note 5)	45	**3.33**	**0.300**	**13.5**	
West windows (Note 5)	45	**3.33**	**0.300**	**13.5**	
South windows (Note 5)	90	**3.33**	**0.300**	**27.0**	
Doors	40	3.04	0.329	13.2	62
Ceiling/attic/roof (Note 6)	1539	20.48	0.049	75.1	1665
Floor (Note 6)	1539	14.15	0.071	108.8	1471
Infiltration					
Colorado Springs, CO				118.2	
Las Vegas, NV				136.9	
Interior walls	1024				1425
TOTAL BUILDING					6006
Excluding infiltration				**366.1**	
Including infiltration (Colorado Springs, CO)				**484.3**	
Including infiltration (Las Vegas, NV)				**503.1**	

WINDOW SUMMARY: DOUBLE-PANE, LOW-E, WOOD FRAME, INSULATED SPACER

	AREA ft^2	U $Btu/(h \cdot ft^2 \cdot °F)$	SHGC (dir. nor.)	TRANS. (dir. nor.)	SC
(Note 7)		(Note 2)	(Note 8)	(Note 9)	(Note 10)
Double-pane, low-e, argon	10.96	**0.247**	**0.432**	**0.387**	**0.504**
Wood frame, insulated spacer	4.04	**0.446**			
Window, composite	15.00	**0.300**	**0.335**	**0.283**	**0.391**

Note 1: Changes to Case L100A are highlighted by bold font.

Note 2: Includes interior and exterior surface coefficients.

Note 3: Heat capacity includes building mass within the thermal envelope (e.g., insulation and insulation thickness of structural framing are included, exterior siding and roof/attic mass are excluded).

Note 4: Excludes area of windows and doors. ASHRAE framed area fraction of 0.25 is assumed for 2×4 16 in. O.C. construction.

Note 5: Window area and other properties are for glass and frame combined. The accompanying window summary disaggregates glass and frame properties for a single window unit. North and south walls contain six window units each; east and west walls contain three window units each.

Note 6: ASHRAE roof/ceiling framing area fraction of 0.1 applied to both ceiling and floor.

Note 7: These data summarize one complete detailed window unit per Figure 7-8 and Tables 7-20 through 7-22.

Note 8: SHGC is the solar heat gain coefficient, which includes the inward flowing fraction of absorbed direct normal solar radiation in addition to direct normal transmittance. For more detail, see *ASHRAE Handbook—Fundamentals*, chapter 27 (Reference B-26).

Note 9: "TRANS." is the direct normal transmittance.

Note 10: Shading coefficient (SC) is the ratio of direct normal SHGC for a specific glazing unit to direct normal SHGC for the WINDOW 4.1 reference glazing unit.

Copyrighted material licensed to Sei Ito on 2020-06-26 for licensee's use only. All rights reserved. No further reproduction or distribution is permitted. Distributed by Techstreet for ASHRAE, www.techstreet.com

Table 7-20 Window Summary (Double-Pane, Low-E, Argon Fill, Wood Frame, Insulated Spacer)—Case L130A

PROPERTY	VALUE	UNITS	NOTES
GENERAL PROPERTIES			
Area, gross window	15.00	ft^2	(Note 1)
Width, frame	2.75	in.	
Area, frame	4.04	ft^2	
Area, edge of glass (EOG)	3.57	ft^2	
Area, center of glass (COG)	7.39	ft^2	
Area, net glass	10.96	ft^2	(Area,EOG + Area,COG)
OPTICAL PROPERTIES			
Absorptance, frame	0.60		
Transmittance, frame	0.00		
COG/EOG optical properties		(see Table 7-21)	(Note 2)
Solar heat gain coefficient (SHGC), gross window	0.335		(Note 3)
Shading coefficient (SC), gross window	0.391		(Note 3)
Dividers, curtains, blinds, and other obstructions in window	None		
THERMAL PROPERTIES (conductances/resistances include film coefficients)			
Conductance, frame (R-value)	0.446 2.242	$Btu/(h \cdot ft^2 \cdot °F)$ $h \cdot ft^2 \cdot °F/Btu$	(Note 4)
Conductance, edge of glass (R-value)	0.265 3.774	$Btu/(h \cdot ft^2 \cdot °F)$ $h \cdot ft^2 \cdot °F/Btu$	
Conductance, COG (R-value)	0.238 4.202	$Btu/(h \cdot ft^2 \cdot °F)$ $h \cdot ft^2 \cdot °F/Btu$	
Conductance, net glass (R-value)	0.247 4.052	$Btu/(h \cdot ft^2 \cdot °F)$ $h \cdot ft^2 \cdot °F/Btu$	(Note 5)
Conductance, gross window (R-value)	0.300 3.329	$Btu/(h \cdot ft^2 \cdot °F)$ $h \cdot ft^2 \cdot °F/Btu$	(Note 6)
COMBINED SURFACE COEFFICIENT CONDUCTANCES			
Exterior surface coefficient, glass and frame	4.256	$Btu/(h \cdot ft^2 \cdot °F)$	Based on output of WINDOW 4.1
Interior surface coefficient, glass	1.333	$Btu/(h \cdot ft^2 \cdot °F)$	Based on output of WINDOW 4.1
Interior surface coefficient, frame	1.460	$Btu/(h \cdot ft^2 \cdot °F)$	From ASHRAE (Note 7)

Note 1: Area for one representative window unit. See Figure 7-8 for a schematic representation of frame, center-of- glass (COG), and edge-of-glass (EOG) areas; dimensions are based on an NFRC size AA vertical slider. Gross window area is the sum of frame, COG, and EOG areas.

Note 2: Edge-of-glass optical properties are the same as the center-of-glass optical properties. Table 7-22 gives optical properties as a function of incidence angle.

Note 3: These are overall window (including COG, EOG, and frame) properties for direct normal solar radiation.

Note 4: The frame conductance presented here is based on the ASHRAE value for operable two-pane window with wood/vinyl frame and insulated spacer adjusted for the exterior surface coefficients also shown in this table. Material properties for dynamic modeling of window frames (density, specific heat, etc.) are not given.

Note 5: Net glass conductance includes only the COG and EOG portions of the window.

Note 6: Gross window conductance includes the frame, EOG, and COG portions of the window.

Note 7: See Informative Annex B5, Section B5.3.

Copyrighted material licensed to Sei Ito on 2020-06-26 for licensee's use only. All rights reserved. No further reproduction or distribution is permitted. Distributed by Techstreet for ASHRAE, www.techstreet.com

Table 7-21 Glazing Summary, Low-E Glazing System with Argon Gas Fill (Center-of-Glass [COG] Values)—Case L130A

PROPERTY	VALUE	UNITS
GENERAL PROPERTIES		
Number of panes	2	
Pane thickness	0.118	in.
Argon gap thickness	0.500	in.
OUTER PANE OPTICAL PROP.		(Note 1, Note 2)
Transmittance	0.450	
Reflectance	0.340	
Absorptance	0.210	
Index of refraction	(Note 3)	
Extinction coefficient	(Note 3)	
INNER PANE OPTICAL PROP.		
Transmittance	0.837	
Reflectance	0.075	
Absorptance	0.088	
Index of refraction	1.5223	
Extinction coefficient	0.7806	/in.
DOUBLE PANE OPTICAL PROP.		
Transmittance	0.387	
Reflectance	0.356	
Absorptance (outer pane)	0.216	
Absorptance (inner pane)	0.041	
Solar heat gain coefficient (SHGC)	0.432	
Shading coefficient (SC)	0.504	
Optical properties as a function of incident angle		(See Table 7-22)
THERMAL PROPERTIES		
Conductivity of glass	0.520	Btu/(h·ft·°F)
Combined radiative and convective coefficient of argon gap (R-value)	0.316 3.170	Btu/(h·ft^2·°F) h·ft^2·°F/Btu
Conductance of glass pane (R-value)	52.881 0.019	Btu/(h·ft^2·°F) h·ft^2·°F/Btu
Exterior combined surface coefficient (R-value)	4.256 0.235	Btu/(h·ft^2·°F) h·ft^2·°F/Btu
Interior combined surface coefficient (R-value)	1.333 0.750	Btu/(h·ft^2·°F) h·ft^2·°F/Btu
U-value, air-air (R-value)	0.238 4.202	Btu/(h·ft^2·°F) h·ft^2·°F/Btu
Hemispherical infrared emittance	0.84	(Note 2)
Infrared transmittance	0	
Density of glass	154	lb/ft^3
Specific heat of glass	0.18	Btu/(lb·°F)

Note 1: Optical properties listed in this table are for direct normal radiation.
Note 2: The inside facing surface of the outer pane has emissivity = 0.04.
Note 3: Single values of index of refraction and extinction coefficient do not adequately describe the optical properties of coated glass.

Copyrighted material licensed to Sei Ito on 2020-06-26 for licensee's use only. All rights reserved. No further reproduction or distribution is permitted. Distributed by Techstreet for ASHRAE, www.techstreet.com

Table 7-22 Optical Properties as a Function of Incidence Angle for Low-Emissivity Double-Pane Glazing—Case L130A

	Properties (Notes 1, 2)				
ANGLE	TRANS.	REFL.	ABS. OUT	ABS. IN	SHGC
0	0.387	0.356	0.216	0.041	0.432
10	0.390	0.350	0.219	0.041	0.434
20	0.384	0.349	0.226	0.041	0.429
30	0.376	0.351	0.231	0.042	0.422
40	0.366	0.359	0.232	0.043	0.413
50	0.347	0.374	0.236	0.044	0.394
60	0.305	0.402	0.250	0.043	0.353
70	0.226	0.472	0.264	0.038	0.271
80	0.107	0.640	0.224	0.029	0.142
90	0.000	0.999	0.001	0.000	0.000
Hemis.	0.323	0.391	0.235	0.041	0.369

Note 1: "TRANS." = Transmittance, "REFL." = Reflectance, "ABS. OUT" = Absorptance of outer pane, "ABS. IN" = Absorptance of inner pane, "SHGC" = solar heat gain coefficient, and "Hemis." = Hemispherically integrated property. Transmittance, reflectance, and SHGC are overall properties for the glazing system (inside pane, argon fill, and outer pane) excluding the frame.

Note 2: Output is from WINDOW 4.1. SHGC accounts for surface coefficients, and is based on windspeed = 10.7 mph.

Copyrighted material licensed to Sei Ito on 2020-06-26 for licensee's use only.
All rights reserved. No further reproduction or distribution is permitted. Distributed by Techstreet for ASHRAE, www.techstreet.com

Table 7-23 Component Solar Fractions—Case L130A

ELEMENT	HEIGHT OR LENGTH	WIDTH	MULTIPLIER	AREA	INSIDE SOLAR FRACTION	
(Note 1)	ft	ft		ft^2		
EXTERIOR NORTH/SOUTH WALLS					(Note 2)	
Gross wall	8.0	57.0	1.0	456.0		
Gross window	5.0	3.0	6.0	90.0		
Window frame only				24.2	0.0031	
Door	6.67	3.0	1.0	20.0	0.0026	
Net wall (Note 3)				346.0		
Insulated wall (Note 3)				259.5	**0.0335**	
Framed wall (Note 3)				86.5	**0.0112**	
EXTERIOR EAST/WEST WALLS						
Gross wall	8.0	27.0	1.0	216.0		
Gross window	5.0	3.0	3.0	45.0		
Window frame only				12.1	0.0016	
Net wall (Note 3)				171.0		
Insulated wall (Note 3)				128.3	**0.0166**	
Framed wall (Note 3)				42.8	0.0055	
INTERIOR WALLS						
Gross wall (Note 4)	8.0	128.0		1024.0		
Unframed wall (Note 4)				921.6	**0.1189**	
Framed wall (Note 4)				102.4	**0.0132**	
FLOOR/CEILING						
Gross floor/ceiling	57.0	27.0	1.0	1539.0		
Insulated floor/ceiling (Note 5)				1385.1	**0.1788**	
Framed floor/ceiling (Note 5)				153.9	**0.0199**	
TRANSMITTED SOLAR, INTERIOR DISTRIBUTION SUMMARY						
Total opaque interior surface area (Note 6)				6272.7	**0.8096**	
Solar to air (or low mass furnishings)					0.1750	(Note 7)
Solar lost (back out through windows)					**0.0154**	(Note 8)

Note 1: Changes to Case L100A are highlighted with bold font.

Note 2: Solar energy transmitted through windows is assumed as distributed to interior opaque surfaces in proportion to their areas. Only the radiation not directly absorbed by lightweight furnishings (assumed to exist only for the purpose of calculating inside solar fraction) or not lost back out through windows is distributed to interior opaque surfaces.

Note 3: Net wall area is gross wall area less the rough opening areas of the windows and door. Insulated and framed exterior wall sections are defined in Figure 7-4. ASHRAE framed area fraction of 0.25 is assumed for 2×4 16 in. O.C. construction.

Note 4: Width is the total length of all interior walls. Framed wall area is assumed to be 10% of gross wall area for 2×4 16 in. O.C. framing. Only one side of the wall is considered for listed area. This area is multiplied by 2 for determining solar fractions. Solar fractions shown are for just one side of the interior wall.

Note 5: Insulated and framed floor and ceiling sections are defined in Figures 7-5 and 7-6, respectively. ASHRAE roof/ceiling framing area fraction of 0.1 applied to both ceiling and floor.

Note 6: Total area of just those surfaces to which an inside solar fraction is applied.

Note 7: Based on the midpoint of the range given by SUNCODE-PC User's Manual, pp. 2–16 (Reference B-24).

Note 8: Calculated using the algorithm described in Informative Annex B7, Section B7.2.

Copyrighted material licensed to Sei Ito on 2020-06-26 for licensee's use only. All rights reserved. No further reproduction or distribution is permitted. Distributed by Techstreet for ASHRAE, www.techstreet.com

Table 7-24 Building Thermal Summary—Case L140A

ELEMENT	AREA	R	U	UA	HEATCAP
(Note 1)	ft^2	$h \cdot ft^2 \cdot °F/Btu$	$Btu/(h \cdot ft^2 \cdot °F)$	Btu/(h·°F)	Btu/°F
Exterior walls (Note 2)	**1304**	11.76	0.085	**110.9**	**1745**
North windows	**0**	0.96	1.039	**0.0**	
East windows	**0**	0.96	1.039	**0.0**	
West windows	**0**	0.96	1.039	**0.0**	
South windows	**0**	0.96	1.039	**0.0**	
Doors	40	3.04	0.329	13.2	62
Ceiling/attic/roof	1539	20.48	0.049	75.1	1665
Floor	1539	14.15	0.071	108.8	1471
Infiltration					
Colorado Springs, CO				118.2	
Las Vegas, NV				136.9	
Interior walls	1024				1425
TOTAL BUILDING					**6367**
Excluding infiltration				**308.0**	
Including infiltration (Colorado Springs, CO)				**426.1**	
Including infiltration (Las Vegas, NV)				**444.9**	

Note 1: Changes to Case L100A are highlighted by bold font. R- and U- values include surface coefficients.
Note 2: Excludes area of windows and doors. ASHRAE framed area fraction of 0.25 is assumed for 2×4 16 in. O.C. construction.

Table 7-25 Component Surface Areas—Case L140A

ELEMENT		HEIGHT	WIDTH	AREA
(Note 1)		ft	ft	ft^2
EXTERIOR NORTH/SOUTH WALLS				
Gross wall		8.0	57.0	456.0
Door		6.67	3.0	20.0
Net wall	(Note 2)			**436.0**
Insulated wall	(Note 2)			**327.0**
Framed wall	(Note 2)			**109.0**
EXTERIOR EAST/WEST WALLS				
Gross wall		8.0	27.0	216.0
Insulated wall	(Note 2)			**162.0**
Framed wall	(Note 2)			**54.0**

Note 1: Changes to Case L100A are highlighted by bold font. R- and U- values include surface coefficients.
Note 2: Net wall area is the gross wall area less the rough opening areas of the windows and door. Insulated and framed exterior wall sections are defined in Figure 7-4. ASHRAE framed area fraction of 0.25 is assumed for 2×4 16 in. O.C. construction.

Copyrighted material licensed to Sei Ito on 2020-06-26 for licensee's use only.
All rights reserved. No further reproduction or distribution is permitted. Distributed by Techstreet for ASHRAE, www.techstreet.com

Table 7-26 Building Thermal Summary—Case L150A

ELEMENT	AREA	R	U	UA	HEATCAP
(Note 1)	ft^2	$h \cdot ft^2 \cdot °F/Btu$	$Btu/(h \cdot ft^2 \cdot °F)$	$Btu/(h \cdot °F)$	Btu/°F
Exterior walls (Note 2)	1034	11.76	0.085	87.9	1383
North windows	**0**	0.96	1.039	**0.0**	
East windows	**0**	0.96	1.039	**0.0**	
West windows	**0**	0.96	1.039	**0.0**	
South windows	**270**	0.96	1.039	**280.5**	
Doors	40	3.04	0.329	13.2	62
Ceiling/attic/roof	1539	20.48	0.049	75.1	1665
Floor	1539	14.15	0.071	108.8	1471
Infiltration					
Colorado Springs, CO				118.2	
Las Vegas, NV				136.9	
Interior walls	1024				1425
TOTAL BUILDING					6006
Excluding infiltration				565.5	
Including infiltration (Colorado Springs, CO)				683.7	
Including infiltration (Las Vegas, NV)				702.4	

Note 1: Changes to Case L100A are highlighted by bold font. R- and U- values include surface coefficients.
Note 2: Excludes area of windows and doors. ASHRAE framed area fraction of 0.25 is assumed for 2×4 16 in. O.C. construction.

Table 7-27 Surface Component Areas and Solar Fractions—Case L150A

ELEMENT	HEIGHT	WIDTH	MULTIPLIER	AREA	INSIDE SOLAR FRACTION
(Note 1)	ft	ft		ft^2	
EXTERIOR SOUTH WALL					(Note 2)
Gross wall	8.0	57.0	1.0	456.0	
Gross window	**5.0**	**3.0**	**18.0**	**270.0**	
Window frame only				**72.7**	**0.0093**
Door	6.67	3.0	1.0	20.0	0.0026
Net wall	(Note 3)			**166.0**	
Insulated wall	(Note 3)			**124.5**	**0.0159**
Framed wall	(Note 3)			**41.5**	**0.0053**
EXTERIOR NORTH WALL					
Gross wall	8.0	57.0	1.0	456.0	
Door	6.67	3.0	1.0	20.0	0.0026
Net wall	(Note 3)			**436.0**	
Insulated wall	(Note 3)			**327.0**	**0.0418**
Framed wall	(Note 3)			**109.0**	**0.0139**
EXTERIOR EAST/WEST WALLS					
Gross wall	8.0	27.0	1.0	216.0	
Insulated wall	(Note 3)			**162.0**	**0.0207**
Framed wall	(Note 3)			**54.0**	**0.0069**

Note 1: Changes to Case L100A are highlighted with bold font. All windows have been moved to the south wall.
Note 2: Solar energy transmitted through windows is assumed as distributed to interior opaque surfaces in proportion to their areas. Only the radiation not directly absorbed by light-weight furnishings (assumed to exist only for the purpose of calculating inside solar fraction) or lost back out through windows is distributed to interior opaque surfaces.
Note 3: Net wall area is gross wall area less the rough opening areas of the windows and door. Insulated and framed exterior wall sections are defined in Figure 7-4. ASHRAE framed area fraction of 0.25 is assumed for 2×4 16 in. O.C. construction.

Copyrighted material licensed to Sei Ito on 2020-06-26 for licensee's use only. All rights reserved. No further reproduction or distribution is permitted. Distributed by Techstreet for ASHRAE, www.techstreet.com

Table 7-28 Building Thermal Summary—Case L160A

ELEMENT	AREA	R	U	UA	HEATCAP
(Note 1)	ft^2	$h \cdot ft^2 \cdot °F/Btu$	$Btu/(h \cdot ft^2 \cdot °F)$	Btu/(h·°F)	Btu/°F
Exterior walls (Note 2)	1034	11.76	0.085	87.9	1383
North windows	**0**	0.96	1.039	**0.0**	
East windows	**135**	0.96	1.039	**140.2**	
West windows	**135**	0.96	1.039	**140.2**	
South windows	**0**	0.96	1.039	**0.0**	
Doors	40	3.04	0.329	13.2	62
Ceiling/attic/roof	1539	20.48	0.049	75.1	1665
Floor	1539	14.15	0.071	108.8	1471
Infiltration					
Colorado Springs, CO				118.2	
Las Vegas, NV				136.9	
Interior walls	1024				1425
TOTAL BUILDING					6006
Excluding infiltration				565.5	
Including infiltration (Colorado Springs, CO)				683.7	
Including infiltration (Las Vegas, NV)				702.4	

Note 1: Changes to Case L100A are highlighted by bold font. R- and U- values include surface coefficients.
Note 2: Excludes area of windows and doors. ASHRAE framed area fraction of 0.25 is assumed for 2×4 16 in. O.C. construction.

Table 7-29 Surface Component Areas and Solar Fractions—Case L160A

ELEMENT	HEIGHT	WIDTH	MULTIPLIER	AREA	INSIDE SOLAR FRACTION
(Note 1)	ft	ft		ft^2	
EXTERIOR SOUTH/NORTH WALLS					(Note 2)
Gross wall	8.0	57.0	1.0	456.0	
Door	6.67	3.0	1.0	20.0	0.0026
Net wall	(Note 3)			**436.0**	
Insulated wall	(Note 3)			**327.0**	**0.0418**
Framed wall	(Note 3)			**109.0**	**0.0139**
EXTERIOR EAST/WEST WALLS					
Gross wall	8.0	27.0	1.0	216.0	
Gross window	**5.0**	**3.0**	**9.0**	**135.0**	
Window frame only				**36.4**	**0.0047**
Net wall	(Note 3)			**81.0**	
Insulated wall	(Note 3)			**60.8**	**0.0078**
Framed wall	(Note 3)			**20.3**	**0.0026**

Note 1: Changes to Case L100A are highlighted with bold font. All windows moved to the east and west walls.
Note 2: Solar energy transmitted through windows is assumed as distributed to interior opaque surfaces in proportion to their areas. Only the radiation not directly absorbed by lightweight furnishings (assumed to exist only for the purpose of calculating inside solar fraction) or not lost back out through windows is distributed to interior opaque surfaces
Note 3: Net wall area is gross wall area less the rough opening areas of the windows and door. Insulated and framed exterior wall sections are defined in Figure 7-4. ASHRAE framed area fraction of 0.25 is assumed for 2×4 16 in. O.C. construction.

Copyrighted material licensed to Sei Ito on 2020-06-26 for licensee's use only. All rights reserved. No further reproduction or distribution is permitted. Distributed by Techstreet for ASHRAE, www.techstreet.com

Table 7-30 Building Thermal Summary—Case L200A

ELEMENT	AREA ft^2	R $h \cdot ft^2 \cdot °F/Btu$	U $Btu/(h \cdot ft^2 \cdot °F)$	UA $Btu/(h \cdot °F)$	HEATCAP Btu/°F
(Note 1)					(Note 2)
Exterior walls (Note 3)	1034	**4.84**	**0.207**	**213.7**	**1356**
North windows	90	0.96	1.039	93.5	
East windows	45	0.96	1.039	46.7	
West windows	45	0.96	1.039	46.7	
South windows	90	0.96	1.039	93.5	
Doors	40	3.04	0.329	13.2	62
Ceiling/attic/roof (Notes 4a, ***4b*)**	1539	***13.44***	***0.074***	***114.6***	**1356**
Floor (Note 4a)	1539	**4.24**	**0.236**	**363.3**	**948**
Infiltration (Note 5)					
Colorado Springs, CO				**264.5**	
Las Vegas, NV				**306.6**	
Interior Walls	1024				1425
TOTAL BUILDING					**5147**
Excluding infiltration				***985.1***	
Including infiltration (Colorado Springs, CO)				***1249.7***	
Including infiltration (Las Vegas, NV)				***1291.7***	

Note 1: Changes to Case L100A are highlighted by bold font. R- and U- values include surface coefficients.

Note 2: Heat capacity includes building mass within the thermal envelope (e.g., insulation and insulation thickness of structural framing are included; exterior siding and roof/attic mass are excluded).

Note 3: Excludes area of windows and doors. ASHRAE framed area fraction of 0.25 is assumed for 2×4 16 in. O.C. construction.

Note 4a: ASHRAE roof/ceiling framing area fraction of 0.1 applied to both ceiling and floor.

Note 4b: Bold italic font indicates correction of Case L200A ceiling/attic/roof summary R- and U-values and related summary UA values originally published in HERS BESTEST. (Previous R- and U- values were listed as 11.75 and 0.085, respectively). This error only occurred for the Case L200A summary compilation of this table; related supplemental (more detailed) input data used to calculate ceiling/attic/roof summary data are correct for this test case. This error does not affect the example results of Informative Annex B20, which all use relevant supplemental data for inputs. Revision here also addresses the minor scaled exterior film coefficient correction noted in Table 7-34.

Note 5: Infiltration UA = (infiltration mass flow) × (specific heat). Assumes air properties: specific heat = 0.240 Btu/(lb·°F); density = 0.075 lb/ft^3 at sea level, adjusted for altitude per Informative Annex B3, Section B3.2. The following values were used to obtain infiltration UA:

LOCATION	ACH	VOLUME, ft^3	ALTITUDE, ft	UA_{inf}(Btu/h·°F
Colorado Springs	**1.5**	12312	6145	**264.5**
Las Vegas	**1.5**	12312	2178	**306.6**

Copyrighted material licensed to Sei Ito on 2020-06-26 for licensee's use only. All rights reserved. No further reproduction or distribution is permitted. Distributed by Techstreet for ASHRAE, www.techstreet.com

Table 7-31 Material Descriptions, Exterior Wall—Case L200A

EXTERIOR WALL (inside to outside)						
ELEMENT (Source)	THICKNESS	R	U	k	DENSITY	c_p
(Note 1)	in.	h·ft²·°F/Btu	Btu/(h·ft²·°F)	Btu/(h·ft·°F)	lb/ft³	Btu/(lb·°F)
Interior surface coefficient		0.685	1.460			
Plasterboard	0.5	0.450	2.222	0.0926	50.0	0.26
Air gap (Note 2)	**3.5**	**1.010**	**0.990**			
Frame 2×4 16 in. O.C. **(Note 3)**	3.5	4.373	0.229	0.0667	32.0	0.33
Fiberboard sheathing	0.5	1.320	0.758	0.0316	18.0	0.31
Hardboard siding, 7/16 in.	0.44	0.670	1.492	0.0544	40.0	0.28
Exterior surface coefficient (Note 4)		0.174	5.748			
Total air-air, nonframe section		**4.309**	**0.232**			
Total air-air, frame section		**7.672**	**0.130**			
Total air-air, composite section	(Note 5)	**4.839**	**0.207**			
Total surf-surf, nonframe section		**3.450**	**0.290**			
Total surf-surf, frame section		**6.813**	**0.147**			
Total surf-surf, composite section	(Note 6)	**3.981**	**0.251**			

Note 1: Changes to Case L100A are highlighted in bold font.
Note 2: Nonframe (air gap) section only. See Figure 7-17 for section view of wall; air gap replaces fiberglass insulation for this case.
Note 3: Framed sections only; **see Figure 7-17 for section view of wall**.
Note 4: 10.7 mph wind speed and brick/rough plaster roughness; see Informative Annex B4 for more on exterior film coefficients.
Note 5: Total composite R-values based on 25% frame area section per ASHRAE.
Note 6: Total surf-surf composite R-value is the total air-air composite R-value less the resistances due to the film coefficients.

Table 7-32 Material Descriptions, Raised Floor Exposed to Air—Case L200A

RAISED FLOOR EXPOSED TO AIR (inside to outside)						
ELEMENT	THICKNESS	R	U	k	DENSITY	c_p
(Note 1)	in.	h·ft²·°F/Btu	Btu/(h·ft²·°F)	Btu/(h·ft·°F)	lb/ft³	Btu/(lb·°F)
Interior surface coefficient (Note 2)		0.765	1.307			
Carpet with fibrous pad (Note 3)		2.080	0.481			0.34
Plywood 3/4 in.	0.75	0.937	1.067	0.0667	34.0	0.29
Joists 2×8 16 in. O.C. (Note 4)						
Exterior surface coefficient (Note 5)		0.455	2.200			
Total air-air		**4.237**	**0.236**			
Total surf-surf (Note 6)		**3.017**	**0.331**			

Note 1: Changes to Case L100A are highlighted with bold font. Fiberglass insulation was deleted for this case.
Note 2: Average of ASHRAE heating and cooling coefficients.
Note 3: There is not enough information available for modeling thermal mass of carpet.
Note 4: Because there is no insulation between joists (see Figure 7-18) and they are exposed directly to ambient air, joists are assumed to be at outdoor air temperature with no insulating value and are not considered as thermal mass.
Note 5: Still air and brick/rough plaster roughness assumed; see Informative Annex B4 for more about exterior film coefficients.
Note 6: Total air-air R-value less the film resistances.

Copyrighted material licensed to Sei Ito on 2020-06-26 for licensee's use only.
All rights reserved. No further reproduction or distribution is permitted. Distributed by Techstreet for ASHRAE, www.techstreet.com

Table 7-33 Material Description, Ceiling—Case L200A

CASE L200: CEILING (inside to outside), attic as unconditioned zone						
ELEMENT	THICKNESS	R	U	k	DENSITY	c_p
(Note 1)	in.	h·ft^2·°F/Btu	Btu/(h·ft^2·°F)	Btu/(h·ft·°F)	lb/ft^3	Btu/(lb·°F)
CEILING (1539 ft^2 total area)						
Interior surface coefficient		0.765	1.307			
Plasterboard	0.5	0.450	2.222	0.0926	50	0.26
Fiberglass batt (Note 2)	**3.5**	**11.000**	**0.091**	**0.0265**	0.6	0.2
Joists 2×6 24 in. O.C. (Note 3)	**3.5**	**4.373**	**0.229**	0.0667	32	0.33
Interior surface coefficient		0.765	1.307			
Total air-air, insulated section		**12.980**	**0.077**			
Total air-air, framed section		**6.353**	**0.157**			
Total air-air, composite section	(Note 4)	**11.754**	**0.085**			
Total surf-surf, composite section	(Note 4)	**10.224**	**0.098**			

Note 1: Changes to Case L100A are highlighted by bold font. Use this table if attic modeled as separate zone.

Note 2: Insulated section only; see Figure 7-19 for section view of ceiling.

Note 3: Framed section only; see Figure 7-19 for section view of ceiling. Modeled framing thickness is reduced to that for insulation; remaining height above insulation is assumed to be at attic air temperature and is not considered for thermal mass.

Note 4: Based on 90% insulated section and 10% frame section per ASHRAE; applies to temperature difference between room air and attic air. The "Composite surf-surf" R-value is the composite air-air R-value less the two interior film coefficient R-values.

Copyrighted material licensed to Sei Ito on 2020-06-26 for licensee's use only. All rights reserved. No further reproduction or distribution is permitted. Distributed by Techstreet for ASHRAE, www.techstreet.com

Table 7-34 Material Descriptions, Ceiling with Attic as Material Layer—Case L200A

CASE L200: CEILING/ATTIC/ROOF (inside to outside)						
ELEMENT	THICKNESS	R	U	k	DENSITY	c_p
(Note 1)	in.	h·ft^2·°F/Btu	Btu/(h·ft^2·°F)	Btu/(h·ft·°F)	lb/ft^3	Btu/(lb·°F)
CEILING/ATTIC/ROOF						
(1539 ft^2 total area, includes gables)						
Interior surface coefficient		0.765	1.307			
Plasterboard	0.5	0.450	2.222	0.0926	50.0	0.26
Fiberglass batt (Note 2)	**3.5**	**11.000**	**0.091**	**0.0265**	0.6	0.20
Joists 2×6 24 in. O.C. (Note 3)	**3.5**	**4.373**	**0.229**	0.0667	32.0	0.33
Attic air (Note 4)		**1.300**	**0.769**			
Total roof deck/gable, surf-surf (Note 5)		0.899	1.112			
Exterior surface coefficient *(Note 6)*		*0.144*	*6.967*			
SUMMARY CEILING/ATTIC/ROOF						
Total air-air, insulated section	***(Note 7)***	***14.558***	***0.069***			
Total air-air, framed section	***(Note 7)***	***7.931***	***0.126***			
Total air-air, composite section	***(Notes 7, 8)***	***13.435***	***0.074***			
Total surf-surf, composite section	***(Notes 7, 9)***	***12.527***	***0.080***			

Note 1: Changes to Case L100A are highlighted by bold font. Use this table if attic modeled as material layer.

Note 2: Insulated section only; see Figure 7-19 for section view.

Note 3: Framed section only; see Figure 7-19 for section view of ceiling/attic/roof. Thickness is the same as for insulation; remaining height above insulation is assumed to be at attic air temperature and is not considered as thermal mass.

Note 4: Average winter/summer values for natural ventilation (2.4 ach), R-11 ceiling insulation, ext abs = 0.6.

Note 5: From Table 7-7 (Case L100A).

Note 6: Minor errata—original HERS BESTEST (Reference B-38) did not scale exterior film coefficient for Case L200A only, and erroneously showed scaled exterior film coefficient = 5.748 Btu/(h·ft^2·°F), with resulting R-composite = 13.467 Btu/(h·ft^2·°F) [versus corrected R-13.435] or overall 0.2% effect). Italic and bold-italic fonts indicate corrected values. This correction was propagated through to summary values in Table 7-30.

Note 7: Values in bold italic font are corrected from original HERS BESTEST (Reference B-38) values, applying the corrected exterior surface coefficient noted above.

Note 8: Based on 10% frame area fraction per ASHRAE; applies to temperature difference between room air and ambient air.

Note 9: Total air-air resistance (see above) less film coefficients.

Copyrighted material licensed to Sei Ito on 2020-06-26 for licensee's use only. All rights reserved. No further reproduction or distribution is permitted. Distributed by Techstreet for ASHRAE, www.techstreet.com

Table 7-35 Building Thermal Summary—L302A

ELEMENT	AREA ft^2	R h·ft^2·°F/Btu	U Btu/(h·ft^2·°F)	UA Btu/(h·°F)	HEATCAP Btu/°F
(Note 1)					(Note 2)
Exterior walls (Note 3)	1034	11.76	0.085	87.9	1383
North windows	90	0.96	1.039	93.5	
East windows	45	0.96	1.039	46.7	
West windows	45	0.96	1.039	46.7	
South windows	90	0.96	1.039	93.5	
Doors	40	3.04	0.329	13.2	62
Ceiling/attic/roof (Note 4)	1539	20.48	0.049	75.1	1665
Floor	1539	**9.41**	**0.106**	**163.6**	**(Note 5)**
Infiltration					
Colorado Springs, CO				118.2	
Interior walls	1024				1425
TOTAL BUILDING					**4535**
Excluding infiltration				**620.3**	
Including infiltration (Colorado Springs, CO)				**738.5**	

Note 1: Changes to Case L100A are highlighted by bold font. R- and U- values include surface coefficients.
Note 2: Heat capacity includes building mass within the thermal envelope (e.g., insulation and insulation thickness of structural framing are included, exterior siding and roof/attic mass are excluded).
Note 3: Excludes the area of windows and doors. ASHRAE framed area fraction of 0.25 is assumed for 2×4 16 in. O.C. construction.
Note 4: ASHRAE roof/ceiling framing area fraction of 0.1 applied to ceiling.
Note 5: For the ASHRAE slab model, thermal mass effects are incorporated into steady-state heat loss coefficients.

Table 7-36 Material Descriptions, Slab-on-Grade Floor—Case L302A

FLOOR, SLAB-ON-GRADE, UNINSULATED ASHRAE		
ELEMENT (inside to outside)	R h·ft^2·°F/Btu	U Btu/(h·ft^2·°F)
Interior surface coefficient (Note 1)	0.765	1.307
Carpet with fibrous pad	2.08	0.481
Slab loss coefficient (Note 2)	6.564	0.152
Total air-air	9.409	0.106

Note 1: Average of ASHRAE heating and cooling coefficients.
Note 2: This R-value is total air-air uninsulated slab R-value without carpet (based on the ASHRAE perimeter method for a metal stud wall) less the R-value of the listed interior film coefficient.

Copyrighted material licensed to Sei Ito on 2020-06-26 for licensee's use only.
All rights reserved. No further reproduction or distribution is permitted. Distributed by Techstreet for ASHRAE, www.techstreet.com

Table 7-37 Building Thermal Summary—Case L304A

ELEMENT	AREA ft^2	R $h \cdot ft^2 \cdot °F/Btu$	U $Btu/(h \cdot ft^2 \cdot °F)$	UA Btu/(h·°F)	HEATCAP Btu/°F
(Note 1)					(Note 2)
Exterior walls (Note 3)	1034	11.76	0.085	87.9	1383
North windows	90	0.96	1.039	93.5	
East windows	45	0.96	1.039	46.7	
West windows	45	0.96	1.039	46.7	
South windows	90	0.96	1.039	93.5	
Doors	40	3.04	0.329	13.2	62
Ceiling/attic/roof (Note 4)	1539	20.48	0.049	75.1	1665
Floor	1539	**18.74**	**0.053**	**82.1**	(Note 5)
Infiltration					
Colorado Springs, CO				118.2	
Interior walls	1024				1425
TOTAL BUILDING					4535
Excluding infiltration				**538.9**	
Including infiltration (Colorado Springs, CO)				**657.0**	

Note 1: Changes to Case L302A are highlighted by bold font. R- and U- values include surface coefficients.
Note 2: Heat capacity includes building mass within the thermal envelope (e.g., insulation and insulation thickness of structural framing are included; exterior siding and roof/attic mass are excluded).
Note 3: Excludes the area of windows and doors. ASHRAE framed area fraction of 0.25 is assumed for 2×4 16 in. O.C. construction.
Note 4: ASHRAE roof/ceiling framing area fraction of 0.1 applied to ceiling.
Note 5: For the ASHRAE slab model, thermal mass effects are incorporated into steady-state heat loss coefficients.

Table 7-38 Material Descriptions, Slab-on-Grade Floor—Case L304A

FLOOR, SLAB ON GRADE, INSULATED ASHRAE		
ELEMENT (inside to outside)	R	U
(Note 1)	$h \cdot ft^2 \cdot °F/Btu$	$Btu/(h \cdot ft^2 \cdot °F)$
Interior surface coefficient (Note 2)	0.765	1.307
Carpet with fibrous pad (ASHRAE)	2.080	0.481
Slab loss coefficient (Note 3)	**15.891**	**0.063**
Total air-air	**18.736**	**0.053**

Note 1: Changes to Case L302A are highlighted with bold font.
Note 2: Average of ASHRAE heating and cooling coefficients.
Note 3: This R-value is total air-air for an insulated slab (R-5.4 from edge to footer) without carpet, based on the ASHRAE perimeter method for metal stud wall construction, less the R-value of the interior film coefficient.

Copyrighted material licensed to Sei Ito on 2020-06-26 for licensee's use only. All rights reserved. No further reproduction or distribution is permitted. Distributed by Techstreet for ASHRAE, www.techstreet.com

Table 7-39 Building Thermal Summary—Case L322A

ELEMENT	AREA ft^2	R $h \cdot ft^2 \cdot °F/Btu$	U $Btu/(h \cdot ft^2 \cdot °F)$	UA Btu/(h·°F)	HEATCAP Btu/°F
(Note 1)					(Note 2)
Exterior walls (Note 3)	1034	11.76	0.085	87.9	1383
North windows	90	0.96	1.039	93.5	
East windows	45	0.96	1.039	46.7	
West windows	45	0.96	1.039	46.7	
South windows	90	0.96	1.039	93.5	
Doors	40	3.04	0.329	13.2	62
Ceiling/attic/roof (Note 4)	1539	20.48	0.049	75.1	1665
Infiltration **(Note 5)**					
Colorado Springs, CO				118.2	
Interior walls	1024				1425
Basement (Note 6)					
Rim joist	**126**	**5.01**	**0.200**	**25.1**	**284**
Above grade concrete wall	**112**	**1.34**	**0.747**	**83.7**	**1568**
Below grade concrete wall	**1106**	**5.87**	**0.170**	**188.4**	**(Note 7)**
Basement floor	**1539**	**41.38**	**0.024**	**37.2**	**(Note 7)**
Main floor/basement ceiling	**1539**				**1930**
TOTAL BUILDING					**8317**
Excluding infiltration				**791.1**	
Including infiltration (Colorado Springs, CO)				**909.2**	

Note 1: Changes to Case L100A are highlighted by bold font. R- and U- values include surface coefficients.

Note 2: Heat capacity includes building mass within the thermal envelope (e.g., insulation and insulation thickness of structural framing are included; exterior siding and roof/attic mass are excluded).

Note 3: Excludes the area of windows and doors. ASHRAE framed area fraction of 0.25 is assumed for 2×4 16 in. O.C. construction.

Note 4: ASHRAE roof/ceiling framing area fraction of 0.1 applied to ceiling.

Note 5: Main floor infiltration is as in Case L100A. The basement zone has no infiltration. If the basement and main floor are being modeled as one combined zone, use an infiltration rate of 0.335 ach applied to the entire conditioned zone air volume of 24,624 ft^3; see Informative Annex B3 for more detail.

Note 6: Basement components are defined in Figures 7-22 and 7-23.

Note 7: For the ASHRAE below-grade wall and basement floor steady-state heat loss models, the effects of thermal mass are incorporated into the steady-state heat loss coefficients.

Copyrighted material licensed to Sei Ito on 2020-06-26 for licensee's use only. All rights reserved. No further reproduction or distribution is permitted. Distributed by Techstreet for ASHRAE, www.techstreet.com

Table 7-40 Basement Component Surface Areas—Case L322A

ELEMENT	HEIGHT OR LENGTH ft	WIDTH ft	MULTIPLIER	AREA ft^2
MAIN FLOOR/BASEMENT CEILING				
Unframed main floor/basement ceiling (Note 1)				1385.1
Framed main floor/basement ceiling (Note 1)				153.9
RIM JOIST—NORTH/SOUTH				
Gross wall	0.75	57.0	1.0	42.8
Joist section (Note 2)	0.625	57.0	1.0	35.6
Sill plate section (Note 2)	0.125	57.0	1.0	7.1
RIM JOIST—EAST/WEST				
Gross wall	0.75	27.0	1.0	20.3
Joist section (Note 2)	0.625	27.0	1.0	16.9
Sill plate section (Note 2)	0.125	27.0	1.0	3.4
ABOVE-GRADE CONCRETE WALL—NORTH/SOUTH				
Gross wall	0.667	57.0	1.0	38.0
ABOVE-GRADE CONCRETE WALL—EAST/WEST				
Gross wall	0.667	27.0	1.0	18.0
BELOW-GRADE CONCRETE WALL				
Gross wall (Note 3)	6.583	168.0	1.0	1106.0
BASEMENT FLOOR				
Concrete slab	57.0	27.0	1.0	1539.0

Note 1: Framed floor areas are assumed to be 10% of gross areas for 2×8 16 in. O.C. framing. Only one side of the floor is considered for listed area. The interior floor sections are as in Figure 7-18 (Case L200A) except the exterior film coefficient is replaced by an interior film coefficient. Solar fractions for the side of this partition that serves as the main floor remain as in Case L100A. The main floor/basement ceiling has been included for the purpose of modeling the effect of its mass; it is not intended to divide the house into separately controlled zones.

Note 2: Rim joist and sill plate sections are defined in Figure 7-23.

Note 3: Width is the total perimeter length of the exterior walls.

Copyrighted material licensed to Sei Ito on 2020-06-26 for licensee's use only.
All rights reserved. No further reproduction or distribution is permitted. Distributed by Techstreet for ASHRAE, www.techstreet.com

Table 7-41 Material Descriptions, Basement Wall—Case L322A

BASEMENT WALL (inside to outside)						
	THICKNESS	R	U	k	DENSITY	c_p
ELEMENT	in.	h·ft²·°F/Btu	Btu/(h·ft²·°F)	Btu/(h·ft·°F)	lb/ft³	Btu/(lb·°F)
RIM JOIST ASSEMBLY						
Interior surface coefficient		0.685	1.460			
Rim joist 2×8 (Note 1)	1.5	1.874	0.534	0.0667	32.0	0.33
Sill plate 2×4 (Note 2)	3.5	4.373	0.229	0.0667	32.0	0.33
Fiberboard sheathing	0.5	1.320	0.758	0.0316	18.0	0.31
Hardboard siding, 7/16 in.	0.44	0.670	1.492	0.0544	40.0	0.28
External surface coefficient		0.174	5.748			
Total air-air, rim joist section		4.723	0.212			
Total air-air, sill plate section		7.222	0.138			
Total air-air, composite section (see Note 3)		5.012	0.200			
Total surf-surf, rim joist section		3.864	0.259			
Total surf-surf, sill plate section		6.363	0.157			
Total surf-surf, composite section (see Note 4)		4.153	0.241			
ABOVE-GRADE CONCRETE WALL						
Interior surface coefficient		0.685	1.460			
Poured concrete	6.0	0.480	2.083	1.0417	140.0	0.20
Exterior surface coefficient		0.174	5.748			
Total air-air		1.339	0.747			
BELOW-GRADE CONCRETE WALL						
Interior surface coefficient		0.685	1.460			
Wall and soil (Note 5)		5.186	0.193			
Total air-air		5.871	0.170			

Note 1: Rim joist section only; see Figure 7-23 for section view.
Note 2: Sill plate section only; see Figure 7-23 for section view.
Note 3: Total composite R-values based on 7.5 in. rim joist section and 1.5 in. sill plate section.
Note 4: Total surf-surf composite R-value is the total air-air composite R-value less the resistances caused by the film coefficients.
Note 5: This R-value is total air-air R-value (based on the ASHRAE overall steady-state heat transfer coefficient for a 6 ft 7 in. deep below-grade concrete wall) less the resistance of the listed interior film coefficient.

Table 7-42 Material Descriptions, Basement Floor—Case L322A

BASEMENT FLOOR, SLAB ON GRADE		
	R	U
ELEMENT (inside to outside)	h·ft²·°F/Btu	Btu/(h·ft²·°F)
Interior surface coefficient (Note 1)	0.765	1.307
Below-grade slab and soil (Note 2)	40.614	0.025
Total air-air	41.379	0.024

Note 1: Average of ASHRAE heating and cooling coefficients.
Note 2: This R-value is the total air-air R-value (based on the ASHRAE overall steady-state heat transfer coefficient for a 6 ft 7 in. deep below-grade concrete floor slab) less the resistance of the listed interior film coefficient.

Copyrighted material licensed to Sei Ito on 2020-06-26 for licensee's use only. All rights reserved. No further reproduction or distribution is permitted. Distributed by Techstreet for ASHRAE, www.techstreet.com

Table 7-43 Material Descriptions, Interior Main Floor/Basement Ceiling—Case L322A

INTERIOR MAIN FLOOR/BASEMENT CEILING (inside to outside)						
	THICKNESS	R	U	k	DENSITY	c_p
ELEMENT	in.	h·ft²·°F/Btu	Btu/(h·ft²·°F)	Btu/(h·ft·°F)	lb/ft³	Btu/(lb·°F)
Interior surface coefficient (Note 1)		0.765	1.307			
Carpet with fibrous pad (Note 2)		2.080	0.481			
Plywood 3/4 in.	0.75	0.937	1.067	0.0667	34.0	0.29
Joists 2×8 16 in. O.C. (Note 3)	7.25	9.058	0.110	0.0667	32.0	0.33
Interior surface coefficient (Note 1)		0.765	1.307			

Note 1: Average of ASHRAE heating and cooling coefficients.
Note 2: There is not enough information available for dynamic modeling of carpet.
Note 3: Framed section only, use Figure 7-18 (Case L200A) floor section view; an interior film replaces the exterior film. Use framed area fraction of 0.1.

Table 7-44 Building Thermal Summary—Case L324A

	AREA	R	U	UA	HEATCAP	
ELEMENT	ft²	h·ft²·°F/Btu	Btu/(h·ft²·°F)	Btu/(h·°F)	Btu/°F	
(Note 1)					(Note 2)	
Exterior walls (Note 3)	1034	11.76	0.085	87.9	1383	
North windows	90	0.96	1.039	93.5		
East windows	45	0.96	1.039	46.7		
West windows	45	0.96	1.039	46.7		
South windows	90	0.96	1.039	93.5		
Doors	40	3.04	0.329	13.2	62	
Ceiling/attic/roof (Note 4)	1539	20.48	0.049	75.1	1665	
Infiltration						
Colorado Springs, CO				118.2		
Interior walls	1024				1425	
Basement (Note 5)						
Rim joist	126	**13.14**	**0.076**	**9.6**	**68**	
Above-grade concrete wall	112	**10.69**	**0.094**	**10.5**	**99**	**(Note 6)**
Below-grade concrete wall	1106	**16.31**	**0.061**	**67.8**	**975**	**(Notes 6,7)**
Basement floor	1539	41.38	0.024	37.2	(Note 8)	
Main floor/basement ceiling	1539				1930	
TOTAL BUILDING					**7607**	
Excluding infiltration				**581.8**		
Including infiltration (Colorado Springs, CO)				**700.0**		

Note 1: Changes to Case L322A are highlighted by bold font. R- and U- values include surface coefficients.
Note 2: Heat capacity includes building mass within the thermal envelope (e.g., insulation and insulation thickness of structural framing are included, exterior siding and roof/attic mass are excluded).
Note 3: Excludes the area of windows and doors. ASHRAE framed area fraction of 0.25 is assumed for 2×4 16 in. O.C. construction.
Note 4: ASHRAE roof/ceiling framing area fraction of 0.1 applied to ceiling.
Note 5: Basement components are defined in Figure 7-24.
Note 6: Framed area fraction of 0.1 used for insulated basement wall.
Note 7: HEATCAP for below-grade basement wall includes only thermal mass associated with plasterboard, framing, and insulation.
Note 8: For the ASHRAE below-grade wall and basement floor steady-state heat loss models, the effects of thermal mass are incorporated into the steady-state heat loss coefficients.

Copyrighted material licensed to Sei Ito on 2020-06-26 for licensee's use only.
All rights reserved. No further reproduction or distribution is permitted. Distributed by Techstreet for ASHRAE, www.techstreet.com

Table 7-45 Component Surface Areas—Case L324A

ELEMENT	HEIGHT or LENGTH	WIDTH	MULTIPLIER	AREA
(Note 1)	ft	ft		ft^2
ABOVE-GRADE CONCRETE WALL—NORTH/SOUTH				
Gross wall	0.667	57.0	1.0	38.0
Insulated wall (Note 2)				**34.2**
Framed wall (Note 2)				**3.8**
ABOVE-GRADE CONCRETE WALL—EAST/WEST				
Gross wall	0.667	27.0	1.0	18.0
Insulated wall (Note 2)				**16.2**
Framed wall (Note 2)				**1.8**
BELOW-GRADE CONCRETE WALL				
Gross wall (Note 3)	6.583	168.0	1.0	1106.0
Insulated wall (Note 2)				**995.4**
Framed wall (Note 2)				**110.6**

Note 1: Changes to Case L322A are highlighted with bold font.
Note 2: 10% framed area fraction is assumed for nonstructural wall framing.
Note 3: Width is the total perimeter length of the exterior walls.

Copyrighted material licensed to Sei Ito on 2020-06-26 for licensee's use only.
All rights reserved. No further reproduction or distribution is permitted. Distributed by Techstreet for ASHRAE, www.techstreet.com

Table 7-46 Material Descriptions, Basement Wall—Case L324A

INSULATED BASEMENT WALL (inside to outside)						
ELEMENT	THICKNESS	R	U	k	DENSITY	c_p
(Note 1)	in.	h·ft²·°F/Btu	Btu/(h·ft²·°F)	Btu/(h·ft·°F)	lb/ft³	Btu/(lb·°F)
RIM JOIST ASSEMBLY						
Interior surface coefficient		0.685	1.460			
Rim Joist 2×8 (Note 2)	1.5	1.874	0.534	0.0667	32.0	0.33
Fiberglass batt (Note 2)	**3.5**	**11.000**	**0.091**	**0.0265**	**0.6**	**0.20**
Sill plate 2×4 (Note 3)	3.5	4.373	0.229	0.0667	32.0	0.33
Fiberboard sheathing	0.5	1.320	0.758	0.0316	18.0	0.31
Hardboard Siding, 7/16 in.	0.4375	0.670	1.492	0.0544	40.0	0.28
Exterior surface coefficient		0.174	5.748			
Total air-air, rim joist section		**15.723**	**0.064**			
Total air-air, sill plate section		**7.222**	**0.138**			
Total air-air, composite section (see Note 4)		**13.144**	**0.076**			
Total surf-surf, rim joist section		**14.864**	**0.067**			
Total surf-surf, sill plate section		**6.363**	**0.157**			
Total surf-surf, composite section (see Note 5)		**12.285**	**0.081**			
ABOVE-GRADE CONCRETE WALL						
Interior surface coefficient		0.685	1.460			
Plasterboard	**0.5**	**0.450**	**2.222**	**0.0926**	**50.0**	**0.26**
Fiberglass batt (Note 6)	**3.5**	**11.000**	**0.091**	**0.0265**	**0.6**	**0.20**
Frame 2×4, 16 in. O.C. (Note 7)	**3.5**	**4.373**	**0.229**	**0.0667**	**32.0**	**0.33**
Poured concrete	6.0	0.480	2.083	1.0417	140.0	0.20
Exterior surface coefficient		0.174	5.748			
Total air-air, insulated section		**12.789**	**0.078**			
Total air-air, frame section		**6.162**	**0.162**			
Total air-air, composite section (see Note 8)		**11.547**	**0.087**			
Total surf-surf, insulated section		**11.930**	**0.084**			
Total surf-surf, frame section		**5.303**	**0.189**			
Total air-air, composite section (see Note 5)		**10.688**	**0.094**			
BELOW-GRADE CONCRETE WALL						
Interior surface coefficient (ASHRAE)		0.685	1.460			
Plasterboard	**0.5**	**0.450**	**2.222**	**0.0926**	**50.0**	**0.26**
Fiberglass batt (Note 6)	**3.5**	**11.000**	**0.091**	**0.0265**	**0.6**	**0.20**
Frame 2×4, 16 in. O.C. (Note 7)	**3.5**	**4.373**	**0.229**	**0.0667**	**32.0**	**0.33**
Wall and soil (Note 9)		5.186	0.193			
Total air-air, insulated section		**17.321**	**0.058**			
Total air-air, frame section		**10.694**	**0.094**			
Total air-air, composite section (see Note 8)		**16.311**	**0.061**			

Note 1: Changes to Case L322A are highlighted with bold font.
Note 2: Rim joist section only; see Figure 7-24 for section view of rim joist.
Note 3: Sill plate section only.
Note 4: Total composite R-values based on 7.5 in. rim joist section and 1.5 in. sill plate section.
Note 5: Total surf-surf composite R-value is the total air-air composite R-value less the resistances caused by the film coefficients.
Note 6: Insulated section only.
Note 7: Framed section only.
Note 8: Total composite R-values from 90% insulated area section 10% frame area section for nonstructural framing.
Note 9: This R-value is total air-air R-value from Case L322A (based on the ASHRAE overall steady-state heat transfer coefficient for a 6ft. 7 in. deep below-grade concrete wall) less the resistance of the listed interior film coefficient.

Copyrighted material licensed to Sei Ito on 2020-06-26 for licensee's use only. All rights reserved. No further reproduction or distribution is permitted. Distributed by Techstreet for ASHRAE, www.techstreet.com

Table 7-47 Building Thermal Summary—Case P100A

ELEMENT	AREA	R	U	UA	HEATCAP
	ft^2	$h \cdot ft^2 \cdot °F/Btu$	$Btu/(h \cdot ft^2 \cdot °F)$	$Btu/(h \cdot °F)$	Btu/°F
(Note 1)		(Note 2)	(Note 2)	(Note 2)	(Note 3)
N/E/W exterior walls (Note 4)	**848**	23.58	0.042	**36.0**	**1435**
Doors	40	3.04	0.329	13.2	62
South windows (Note 5)	**325**	**1.96**	**0.510**	**165.7**	
South exterior insulated wall	**50**	**27.18**	**0.037**	**1.8**	**32**
South exterior insulated wall	**81**	**16.05**	**0.062**	**5.0**	**441**
Ceiling/attic/roof (Note 6)	1539	59.53	0.017	25.9	1850
Floor (Note 6)	1539	**23.35**	**0.043**	**65.9**	**11131**
Infiltration					
Colorado Springs, CO				118.2	
Interior low mass walls	**688**				**957**
Interior high mass walls	**336**				**6989**
TOTAL BUILDING					**22896**
Excluding infiltration				**313.5**	
Including infiltration (Colorado Springs, CO)				**431.7**	

WINDOW SUMMARY: DOUBLE PANE, WOOD FRAME WITH METAL SPACER

(Note 7)	AREA	U	SHGC	TRANS.	SC
	ft^2	$Btu/(h \cdot ft^2 \cdot °F)$	(dir. nor.)	(dir. nor.)	
		(Note 2)	(Note 8)	(Note 9)	(Note 10)
Glass pane	**11.87**	**0.516**	**0.760**	**0.705**	**0.887**
Wood frame with metal spacer	**4.38**	**0.492**			
Window, composite	**16.25**	**0.510**	**0.577**	**0.515**	**0.672**

PASSIVE SOLAR DESIGN SUMMARY

(Note 11)	SGLA	SGLA/Floor A	Heatcap/SGLA	Mass A/SGLA	LCR
	ft^2		$Btu/(ft^2 \cdot °F)$		$Btu/(day \cdot °F \cdot ft^2)$
					(Note 12)
	237	**0.154**	**96.5**	**7.90**	**31.3**

Note 1: Changes to Case L120A are highlighted by bold font.

Note 2: Includes interior and exterior surface coefficients.

Note 3: Heat capacity includes building mass within the thermal envelope (e.g., insulation and insulation thickness of structural framing are included, exterior siding and roof/attic mass are excluded).

Note 4: Excludes area of doors. ASHRAE framed area fraction of 0.22 used for 2×6 24 in. O.C. construction.

Note 5: Window area and other properties are for glass and frame combined. The accompanying window summary disaggregates glass and frame properties for a single-window unit. The south wall contains 20 window units.

Note 6: ASHRAE roof/ceiling framing area fraction of 0.1 used for both ceiling and floor.

Note 7: These data summarize one complete detailed window unit per Figure 7-31 and Tables 7-51 through 7-53.

Note 8: SHGC is the solar heat gain coefficient, which includes the inward flowing fraction of absorbed direct normal solar radiation in addition to direct normal transmittance. For more detail, see *ASHRAE Handbook—Fundamentals*, Chapter 27 (Reference B-26).

Note 9: "TRANS." is the direct normal transmittance.

Note 10: Shading coefficient (SC) is the ratio of direct normal SHGC for a specific glazing unit to direct normal SHGC for the WINDOW 4.1 reference glazing unit.

Note 11: This case is representative of passive solar design. However, an optimized passive solar design would include more glass (less window frame) area than is given here, with a corresponding increase in the mass surface area, and an overhang per Case P105A.

Note 12: "LCR" is Load to Collector Area Ratio, calculated from ([total building UA including infiltration] – [south glass UA]) × (24 h/day)/(south glass area).

Copyrighted material licensed to Sei Ito on 2020-06-26 for licensee's use only. All rights reserved. No further reproduction or distribution is permitted. Distributed by Techstreet for ASHRAE, www.techstreet.com

Table 7-48 Component Surface Areas and Solar Fractions—Case P100A

ELEMENT	HEIGHT OR LENGTH	WIDTH	MULTIPLIER	AREA	INSIDE SOLAR FRACTION	
(Note 1)	ft	ft		ft^2		
EXTERIOR SOUTH WALL					**(Note 2)**	
Gross wall	8.0	57.0	1.0	456.0		
Gross window	**6.5**	**2.5**	**20.0**	**325.0**		
Window frame only			**20.0**	**87.7**	**0.0065**	
Insulated L120A wall	**(Note 3)**			**50.0**	**0.0037**	
Framed L120A wall	**(Note 3)**			**81.0**	**0.0060**	
EXTERIOR NORTH WALL						
Gross wall	8.0	57.0	1.0	456.0		
Door	6.67	3.0	1.0	20.0	**0.0015**	
Insulated L120A wall	(Note 4)			**340.1**	**0.0251**	
Framed L120A wall	(Note 4)			**95.9**	**0.0071**	
EXTERIOR EAST WALL						
Gross wall	8.0	27.0	1.0	216.0		
Door	**6.67**	**3.0**	**1.0**	**20.0**	**0.0015**	
Insulated L120A wall	(Note 4)			**152.9**	**0.0113**	
Framed L120A wall	(Note 4)			**43.1**	**0.0032**	
EXTERIOR WEST WALL						
Gross wall	8.0	27.0	1.0	216.0		
Insulated L120A wall	(Note 4)			**168.5**	**0.0124**	
Framed L120A wall	(Note 4)			**47.5**	**0.0035**	
CEILING						
Gross ceiling	57.0	27.0	1.0	1539.0		
Insulated ceiling	(Note 5)			1385.1	**0.1022**	
Framed ceiling	(Note 5)			153.9	**0.0114**	
FLOOR						
Gross floor	57.0	27.0	1.0	1539.0		
Insulated floor	(Note 5)			1385.1	**0.2689**	
Framed floor	(Note 5)			153.9	**0.0299**	
INTERIOR WALLS						
Gross wall (Note 6)	8.0	128.0		1024.0		
Mass wall (Note 6)	**8.0**	**14.0**	**3.0**	**336.0**	**0.1028**	
Unframed wall	**(Note 6)**			**619.2**	**0.0457**	
Framed wall	**(Note 6)**			**68.8**	**0.0051**	
TRANSMITTED SOLAR, INTERIOR DISTRIBUTION SUMMARY						
Total opaque interior surface area (Note 7)				**6232.7**	**0.8010**	
Solar-to-air (or low-mass furnishings)					0.1750	
Solar lost (back out through windows)					**0.0240**	**(Note 8)**

Note 1: Changes to Case L120A are highlighted with bold font.
Note 2: Calculation of Inside Solar Fractions for Case P100A is described in Informative Annex B19.
Note 3: Because of the large amount of glazing on the south wall (see Figure 7-28), the only place for batt insulation is above the window headers; remaining wall area contains only the framed section of Figure 7-9 (Case L120A).
Note 4: Insulated and framed exterior wall sections are defined in Figure 7-9 (Case L120A). ASHRAE framed area fraction of 0.22 is assumed for 2×6 24 in. O.C. construction.
Note 5: Insulated and framed floor and ceiling sections are defined in Figures 7-29 and 7-10 (Case L120A), respectively. ASHRAE roof/ceiling framing area fraction of 0.1 applied to both ceiling and floor.
Note 6: Width is the length of interior walls from Figures 7-2 (Case L100A) and 7-28. Framed wall area is assumed to be 10% of gross wall area for 2×4 16 in. O.C. framing. Only one side of the wall is considered for listed area. This area is multiplied by 2 to determine solar fractions. Solar fractions shown are for just one side of the wall. Interior walls within the conditioned zone have been included for the purpose of modeling the effect of their mass. They are not intended to divide the conditioned zone into separately controlled zones.
Note 7: Total area of just those surfaces to which an inside solar fraction is applied.
Note 8: Calculated using the algorithm described in Informative Annex B7, Section B7.2.

Copyrighted material licensed to Sei Ito on 2020-06-26 for licensee's use only. All rights reserved. No further reproduction or distribution is permitted. Distributed by Techstreet for ASHRAE, www.techstreet.com

Table 7-49 Material Descriptions, Raised Floor Exposed to Air—Case P100A

RAISED FLOOR EXPOSED TO AIR (inside to outside)						
ELEMENT	THICKNESS	R	U	k	DENSITY	c_p
(Note 1)	in.	h·ft^2·°F/Btu	Btu/(h·ft^2·°F)	Btu/(h·ft·°F)	lb/ft^3	Btu/(lb·°F)
Interior surface coefficient (Note 2)		0.765	1.307			
Brick pavers	**2.19**	**0.243**	**4.114**	**0.7500**	**135.0**	**0.24**
Plywood 3/4 in.	0.75	0.937	1.067	0.0667	34.0	0.29
Fiberglass batt (Note 3)	**7.25**	**24.000**	**0.042**	**0.0252**	**0.66**	0.20
Joists 2×8 16 in. O.C. (Note 4)	**7.25**	**9.058**	**0.110**	0.0667	32.0	0.33
Exterior surface coefficient (Note 5)		0.455	2.200			
Total air-air, insulated section		**26.400**	**0.038**			
Total air-air, frame section		**11.458**	**0.087**			
Total air-air, composite section (Note 6)		**23.354**	**0.043**			
Total surf-surf, composite section (Note 7)		**22.134**	**0.045**			

Note 1: Changes to Case L120A highlighted by bold font.
Note 2: Average of ASHRAE heating and cooling coefficients.
Note 3: Insulated section only; see Figure 7-29 for section view of floor. Properties account for compression of 8 in. batt into 7.25 in. cavity.
Note 4: Framed section only; see Figure 7-29 for section view of floor.
Note 5: Still air and brick/rough plaster roughness assumed; see Informative Annex B4 for exterior film coefficient as a function of windspeed and surface roughness. This coefficient is applied to entire floor area (1539 ft^2).
Note 6: ASHRAE roof/ceiling framing area fraction of 0.1 applied.
Note 7: Total air-air composite R-value less the film resistances.

Table 7-50 Material Descriptions, Interior Mass Wall—Case P100A

INTERIOR MASS WALL						
ELEMENT (Source)	THICKNESS	R	U	k	DENSITY	c_p
(Note 1)	in.	h·ft^2·°F/Btu	Btu/(h·ft^2·°F)	Btu/(h·ft·°F)	lb/ft^3	Btu/(lb·°F)
Interior surface coefficient		0.685	1.460			
Face brick	**4.0**	**0.444**	**2.250**	**0.7500**	**130.0**	**0.24**
Face brick	**4.0**	**0.444**	**2.250**	**0.7500**	**130.0**	**0.24**
Interior surface coefficient		0.685	1.460			

Note 1: Changes to Case L120A are highlighted by bold font; change only to mass walls are designated in Figure 7-28.

Copyrighted material licensed to Sei Ito on 2020-06-26 for licensee's use only.
All rights reserved. No further reproduction or distribution is permitted. Distributed by Techstreet for ASHRAE, www.techstreet.com

Table 7-51 Window Summary, Double-Pane, Clear, Wood-Frame Window—Case P100A

PROPERTY	VALUE	UNITS	NOTES
GENERAL PROPERTIES			
Area, gross window	16.25	ft^2	(Note 1)
Width, frame	2.75	in.	
Area, frame	4.38	ft^2	
Area, edge of glass (EOG)	3.78	ft^2	
Area, center of glass (COG)	8.09	ft^2	
Area, net glass	11.87	ft^2	(Area,EOG + Area,COG)
OPTICAL PROPERTIES			
Absorptance, frame	0.60		
Transmittance, frame	0.00		
COG/EOG optical properties	(see Table 7-52)		(Note 2)
Solar heat gain coefficient (SHGC), gross window	0.577		(Note 3)
Shading coefficient (SC), gross window	0.672		(Note 3)
Dividers, curtains, blinds, and other obstructions in window	None		
THERMAL PROPERTIES (conductances/resistances include film coefficients)			
Conductance, frame	0.492	$Btu/(h \cdot ft^2 \cdot °F)$	Wood frame with metal spacer
(R-value)	2.031	$h \cdot ft^2 \cdot °F/Btu$	(Note 4)
Conductance, edge of glass	0.588	$Btu/(h \cdot ft^2 \cdot °F)$	
(R-value)	1.700	$h \cdot ft^2 \cdot °F/Btu$	
Conductance, COG	0.483	$Btu/(h \cdot ft^2 \cdot °F)$	
(R-value)	2.070	$h \cdot ft^2 \cdot °F/Btu$	
Conductance, net glass	0.516	$Btu/(h \cdot ft^2 \cdot °F)$	(Note 5)
(R-value)	1.936	$h \cdot ft^2 \cdot °F/Btu$	
Conductance, gross window	0.510	$Btu/(h \cdot ft^2 \cdot °F)$	(Note 6)
(R-value)	1.961	$h \cdot ft^2 \cdot °F/Btu$	
COMBINED SURFACE COEFFICIENT CONDUCTANCES			
Exterior surface coefficient, glass and frame	4.226	$Btu/(h \cdot ft^2 \cdot °F)$	Based on output of WINDOW 4.1
Interior surface coefficient, glass	1.397	$Btu/(h \cdot ft^2 \cdot °F)$	Based on output of WINDOW 4.1
Interior surface coefficient, frame	1.460	$Btu/(h \cdot ft^2 \cdot °F)$	From ASHRAE

Note 1: Area for one representative window unit. See Figure 7-31 for schematic representation of frame, center-of-glass (COG), and edge-of-glass (EOG) areas. Gross window area is the sum of frame, COG, and EOG areas.

Note 2: Edge-of-glass optical properties are the same as the center-of-glass optical properties. Table 7-53 gives optical properties as a function of incidence angle.

Note 3: These are overall window (COG, EOG, and frame) properties for direct normal solar radiation.

Note 4: The frame conductance presented here is based on the ASHRAE value for operable two-pane window with wood/vinyl frame and metal spacer adjusted for the exterior surface coefficients also shown in this table. Material properties for dynamic modeling of window frames (density, specific heat, etc.) are not given.

Note 5: Net glass conductance includes only the COG and EOG portions of the window.

Note 6: Gross window conductance includes the frame, EOG, and COG portions of the window.

Copyrighted material licensed to Sei Ito on 2020-06-26 for licensee's use only. All rights reserved. No further reproduction or distribution is permitted. Distributed by Techstreet for ASHRAE, www.techstreet.com

Table 7-52 Glazing Summary, Clear Double-Pane Center-of-Glass Values—Case P100A

PROPERTY	VALUE	UNITS
GENERAL PROPERTIES		
Number of panes	2	
Pane thickness	0.118	in.
Air gap thickness	0.500	in.
SINGLE-PANE OPTICAL PROPERTIES	(Note 1)	
Transmittance	0.837	
Reflectance	0.075	
Absorptance	0.088	
Index of refraction	1.5223	
Extinction coefficient	0.7806	/in.
DOUBLE-PANE OPTICAL PROPERTIES		
Transmittance	0.705	
Reflectance	0.128	
Absorptance (outer pane)	0.094	
Absorptance (inner pane)	0.074	
Solar heat gain coefficient (SHGC)	0.760	
Shading coefficient (SC)	0.887	
Optical properties as a function of incident angle	(See Table 7-53)	
THERMAL PROPERTIES		
Conductivity of glass	0.520	Btu/(h·ft·°F)
Combined radiative and convective coefficient of air gap (R-value)	0.926 1.080	Btu/(h·ft^2·°F) h·ft^2·°F/Btu
Conductance of glass pane (R-value)	52.881 0.019	Btu/(h·ft^2·°F) h·ft^2·°F/Btu
Exterior combined surface coefficient (R-value)	4.226 0.237	Btu/(h·ft^2·°F) h·ft^2·°F/Btu
Interior combined surface coefficient (R-value)	1.397 0.716	Btu/(h·ft^2·°F) h·ft^2·°F/Btu
U-Value, air-air (R-value)	0.483 2.070	Btu/(h·ft^2·°F) h·ft^2·°F/Btu
Hemispherical infrared emittance	0.84	
Infrared transmittance	0.0	
Density of glass	154.0	lb/ft^3
Specific heat of glass	0.18	Btu/(lb·°F)

Note 1: Optical properties listed in this table are for direct normal radiation.

Copyrighted material licensed to Sei Ito on 2020-06-26 for licensee's use only. All rights reserved. No further reproduction or distribution is permitted. Distributed by Techstreet for ASHRAE, www.techstreet.com

Table 7-53 Optical Properties as a Function of Incidence Angle for Clear Double-Pane Glazing—Case P100A

	PROPERTIES (Notes 1, 2)				
ANGLE	TRANS.	REFL.	ABS. OUT	ABS. IN	SHGC
0	0.705	0.128	0.094	0.074	0.760
10	0.704	0.128	0.094	0.074	0.759
20	0.700	0.128	0.096	0.076	0.757
30	0.693	0.130	0.099	0.078	0.751
40	0.678	0.139	0.103	0.080	0.738
50	0.646	0.164	0.109	0.081	0.708
60	0.577	0.226	0.117	0.081	0.639
70	0.436	0.363	0.127	0.074	0.495
80	0.204	0.608	0.133	0.055	0.252
90	0.000	1.000	0.000	0.000	0.000
Hemis.	0.601	0.205	0.108	0.076	0.659

Note1: "TRANS." = Transmittance, "REFL." = Reflectance, "ABS. OUT" = Absorptance of outer pane, "ABS. IN" = Absorptance of inner pane, "SHGC" = solar heat gain coefficient, and "Hemis." = Hemispherically integrated property. Transmittance, reflectance, and SHGC are overall properties for the entire glazing system (excluding the frame).

Note 2: Output is from WINDOW 4.1. SHGC accounts for surface coefficients and is based on wind speed of 10.7 mph.

Table 7-54 Building Thermal Summary—Case P110A

	AREA	R	U	UA	HEATCAP
ELEMENT	ft^2	$h \cdot ft^2 \cdot °F/Btu$	$Btu/(h \cdot ft^2 \cdot °F)$	$Btu/(h \cdot °F)$	Btu/°F
(Note 1)		(Note 2)	(Note 2)	(Note 2)	(Note 3)
N/E/W exterior walls (Note 4)	848	23.58	0.042	36.0	1435
Doors	40	3.04	0.329	13.2	62
South windows (Note 5)	325	1.96	0.510	165.7	
South exterior insulated wall	50	27.18	0.037	1.8	32
South exterior framed wall	81	16.05	0.062	5.0	441
Ceiling/attic/roof (Note 6)	1539	59.53	0.017	25.9	1850
Floor (Note 6)	1539	23.35	0.043	65.9	**2041**
Infiltration					
Colorado Springs, CO				118.2	
Interior low mass walls	**1024**				**1425**
TOTAL BUILDING					**7285**
Excluding infiltration				313.5	
Including infiltration (Colorado Springs, CO)				431.7	
PASSIVE SOLAR DESIGN SUMMARY					
	SGLA	SGLA/Floor A	HEATCAP/SGLA	MASS A/SGLA	LCR (Note 7)
	ft^2		$Btu/(°F \cdot ft^2)$		$Btu/(day \cdot °F \cdot ft^2)$
	237	**0.154**	**30.7**	**0.0**	**31.3**

Note 1: Changes to Case P100A are highlighted by bold font.

Note 2: Includes interior and exterior surface coefficients.

Note 3: Heat capacity includes building mass within the thermal envelope (e.g., insulation and insulation thickness of structural framing are included; exterior siding and roof/attic mass are excluded).

Note 4: Excludes area of doors. ASHRAE framed area fraction of 0.22 used for 2×6 24 in. O.C. construction.

Note 5: Window area and other properties are for glass and frame combined.

Note 6: ASHRAE roof/ceiling framing area fraction of 0.1 used for both ceiling and floor.

Note 7: LCR is Load to Collector Area Ratio, calculated from ([total building UA including infiltration] – [south glass UA]) × (24 h/day)/(south glass area).

Copyrighted material licensed to Sei Ito on 2020-06-26 for licensee's use only. All rights reserved. No further reproduction or distribution is permitted. Distributed by Techstreet for ASHRAE, www.techstreet.com

Table 7-55 Component Surface Areas and Solar Fractions—Case P110A

ELEMENT	HEIGHT OR LENGTH	WIDTH	AREA	INSIDE SOLAR FRACTION
(Note 1)	ft	ft	ft^2	
INTERIOR WALLS				
Gross wall (Note 2)	8.0	128.0	1024.0	
Unframed wall (Note 2)			**921.6**	**0.1382**
Framed wall (Note 2)			**102.4**	**0.0154**

Note 1: Changes to Case P100A are highlighted with bold font.

Note 2: Width is the total length of all interior walls from Figure 7-2 (Case L100A). Framed wall area is assumed to be 10% of gross wall area for 2×4 16 in. O.C. framing. Only one side of the wall is considered for listed area. This area is multiplied by 2 to determine solar fractions. Solar fractions shown are for just one side of the wall. Interior walls within the conditioned zone have been included for the purpose of modeling the effect of their mass. They are not intended to divide the conditioned zone into separately controlled zones.

Table 7-56 Material Descriptions, Raised Floor Exposed to Air—Case P110A

RAISED FLOOR (inside to outside)						
ELEMENT	THICKNESS	R	U	k	DENSITY	c_p
(Note 1)	in.	$h \cdot ft^2 \cdot °F/Btu$	$Btu/(h \cdot ft^2 \cdot °F)$	$Btu/(h \cdot ft \cdot °F)$	lb/ft^3	$Btu/(lb \cdot °F)$
Interior surface coefficient (Note 2)		0.765	1.307			
Floor covering (Note 3)		**0.243**	**4.114**			
Plywood 3/4 in.	0.75	0.937	1.067	0.0667	34.0	0.29
Fiberglass batt **(Note 4)**	7.25	24.000	0.042	0.0252	0.66	0.20
Joists 2×8 16 in. O.C. **(Note 5)**	7.25	9.058	0.110	0.0667	32.0	0.29
Exterior surface coefficient (Note 6)		0.455	2.200			
Total air-air, insulated section		26.400	0.038			
Total air-air, frame section		11.458	0.087			
Total air-air, composite section (Note 7)		23.354	0.043			
Total surf-surf, composite section (Note 8)		22.134	0.045			

Note 1: Changes to Case P100A highlighted by bold font.

Note 2: Average of ASHRAE heating and cooling coefficients.

Note 3: This floor covering (see Figure 7-34) is included so that the steady-state air-air composite floor conductance is the same as for the high-mass passive-solar floor. "Floor Covering" replaces "Brick Pavers" in Figure 7-29 (Case P100A).

Note 4: Insulated section only; see Figure 7-34 for section view of floor. Properties account for compression of 8 in. batt into 7.25 in. cavity.

Note 5: Framed section only; see Figure 7-34 for section view of floor.

Note 6: Still air and brick/rough plaster roughness assumed; see Informative Annex B4 for exterior film coefficient as a function of windspeed and surface roughness. This coefficient is applied to entire floor area (1539 ft^2).

Note 7: Calculated value; ASHRAE roof/ceiling framing area fraction of 0.1 applied.

Note 8: Total air-air composite R-value less the film resistances.

Copyrighted material licensed to Sei Ito on 2020-06-26 for licensee's use only. All rights reserved. No further reproduction or distribution is permitted. Distributed by Techstreet for ASHRAE, www.techstreet.com

Table 7-57 Building Thermal Summary—Case P140A

ELEMENT	AREA	R	U	UA	HEATCAP
	ft^2	$h \cdot ft^2 \cdot °F/Btu$	$Btu/(h \cdot ft^2 \cdot °F)$	$Btu/(h \cdot °F)$	Btu/°F
(Note 1)		(Note 2)	(Note 2)	(Note 2)	(Note 3)
Exterior walls (Note 4)	**1304**	**23.58**	**0.042**	**55.3**	**2206**
Doors	40	3.04	0.329	13.2	62
Ceiling/attic/roof (Note 5)	1539	59.53	0.017	25.9	1850
Floor (Note 5)	1539	23.35	0.043	65.9	11131
Infiltration					
Colorado Springs, CO				118.2	
Interior low mass walls	688				957
Interior high mass walls	336				6989
TOTAL BUILDING					**23194**
Excluding infiltration				**160.2**	
Including infiltration (Colorado Springs, CO)				**278.4**	
PASSIVE SOLAR DESIGN SUMMARY					
	SGLA	SGLA/Floor A	HEATCAP/SGLA	MASS A/SGLA	LCR
	ft^2		$Btu/(°F \cdot ft^2)$		$Btu/(day \cdot °F \cdot ft^2)$
	0.0	**0.0**	**N/A**	**N/A**	**N/A**

Note 1: Changes to Case P100A are highlighted by bold font. Windows have been removed from the south wall.
Note 2: Includes interior and exterior surface coefficients.
Note 3: Heat capacity includes building mass within the thermal envelope (e.g., insulation and insulation thickness of structural framing are included, exterior siding and roof/attic mass are excluded).
Note 4: Excludes area of doors. ASHRAE framed area fraction of 0.22 used for 2×6 24 in. O.C. construction.
Note 5: ASHRAE roof/ceiling framing area fraction of 0.1 used for both ceiling and floor.

Table 7-58 Component Surface Areas—Case P140A

ELEMENT	HEIGHT or LENGTH	WIDTH	MULTIPLIER	AREA
(Note 1)	ft	ft		ft^2
EXTERIOR SOUTH WALL				
Gross wall	8.0	57.0	1.0	456.0
Insulated L120A wall (Note 2)				**355.7**
Framed L120A wall (Note 2)				**100.3**

Note 1: Changes to Case P100A are highlighted with bold font.
Note 2: Insulated and framed exterior wall sections are defined in Figure 7-9 (Case L120A). ASHRAE framed area fraction of 0.22 is assumed for 2×6 24 in. O.C. construction.

Copyrighted material licensed to Sei Ito on 2020-06-26 for licensee's use only.
All rights reserved. No further reproduction or distribution is permitted. Distributed by Techstreet for ASHRAE, www.techstreet.com

Table 7-59 Building Thermal Summary—Case P150A

ELEMENT	AREA ft^2	R $h \cdot ft^2 \cdot °F/Btu$	U $Btu/(h \cdot ft^2 \cdot °F)$	UA Btu/(h·°F)	HEATCAP Btu/°F
(Note 1)		(Note 2)	(Note 2)	(Note 2)	(Note 3)
Exterior walls (Note 4)	**979**	**23.58**	**0.042**	**41.5**	**1656**
North windows (Note 5)	**113.75**	**1.96**	**0.510**	**58.0**	
East windows (Note 5)	**48.75**	**1.96**	**0.510**	**24.9**	
West windows (Note 5)	**48.75**	**1.96**	**0.510**	**24.9**	
South windows (Note 5)	**113.75**	**1.96**	**0.510**	**58.0**	
Doors	40	3.04	0.329	13.2	62
Ceiling/attic/roof (Note 6)	1539	59.53	0.017	25.9	1850
Floor (Note 6)	1539	23.35	0.043	65.9	11131
Infiltration					
Colorado Springs, CO				118.2	
Interior low mass walls	688				957
Interior high mass walls	336				6989
TOTAL BUILDING					**22645**
Excluding infiltration				**312.2**	
Including infiltration (Colorado Springs, CO)				**430.3**	

PASSIVE SOLAR DESIGN SUMMARY

SGLA ft^2	SGLA/Floor A	HEATCAP/SGLA $Btu/(°F \cdot ft^2)$	MASS A/SGLA	LCR (Note 7) $Btu/(day \cdot °F \cdot ft^2)$
83	**0.054**	**272.6**	**22.57**	**111.9**

Note 1: Changes to Case P100A are highlighted by bold font. Windows have been removed from the south wall.

Note 2: Includes interior and exterior surface coefficients.

Note 3: Heat capacity includes building mass within the thermal envelope (e.g., insulation and insulation thickness of structural framing are included; exterior siding and roof/attic mass are excluded).

Note 4: Excludes area of doors. ASHRAE framed area fraction of 0.22 used for 2×6 24 in. O.C. construction.

Note 5: Window area and other properties are for glass and frame combined. North and south walls contain seven window units each; east and west walls contain three window units each. These are the same window units as Case P100A (Figure 7-31).

Note 6: ASHRAE roof/ceiling framing area fraction of 0.1 used for both ceiling and floor.

Note 7: LCR is Load to Collector Area Ratio, calculated from ([total building UA including infiltration] – [south glass UA]) × (24 h/day)/(south glass area).

Copyrighted material licensed to Sei Ito on 2020-06-26 for licensee's use only. All rights reserved. No further reproduction or distribution is permitted. Distributed by Techstreet for ASHRAE, www.techstreet.com

Table 7-60 Component Surface Areas and Solar Fractions—Case P150A

ELEMENT	HEIGHT OR LENGTH	WIDTH	MULTIPLIER	AREA	INSIDE SOLAR FRACTION
(Note 1)	ft	ft		ft^2	
EXTERIOR SOUTH WALL					**(Note 2)**
Gross wall	8.0	57.0	1.0	456.0	
Gross window	6.5	2.5	**7.0**	**113.8**	
Window frame only			**7.0**	**30.7**	**0.0039**
Insulated L120A Wall (Note 3)				**267.0**	**0.0343**
Framed L120A Wall (Note 3)				**75.3**	**0.0097**
EXTERIOR NORTH WALL					
Gross Wall	8.0	57.0	1.0	456.0	
Door	6.67	3.0	1.0	20.0	**0.0026**
Gross window	**6.5**	**2.5**	**7.0**	**113.8**	
Window frame only			**7.0**	**30.7**	**0.0039**
Insulated L120A wall (Note 3)				**251.4**	**0.0323**
Framed L120A wall (Note 3)				**70.9**	**0.0091**
EXTERIOR EAST WALL					
Gross wall	8.0	27.0	1.0	216.0	
Door	6.67	3.0	1.0	20.0	**0.0026**
Gross window	**6.5**	**2.5**	**3.0**	**48.8**	
Window frame only			**3.0**	**13.2**	**0.0017**
Insulated L120A wall (Note 3)				**114.9**	**0.0148**
Framed L120A wall (Note 3)				**32.4**	**0.0042**
EXTERIOR WEST WALL					
Gross wall	8.0	27.0	1.0	216.0	
Gross window	**6.5**	**2.5**	**3.0**	**48.8**	
Window frame only			**3.0**	**13.2**	**0.0017**
Insulated L120A wall (Note 3)				**130.5**	**0.0168**
Framed L120A wall (Note 3)				**36.8**	**0.0047**
FLOOR/CEILING					
Gross floor/ceiling	57.0	27.0	1.0	1539.0	
Insulated floor/ceiling (Note 4)				1385.1	**0.1780**
Framed floor/ceiling (Note 4)				153.9	**0.0198**
INTERIOR WALLS					
Gross wall (Note 5)	8.0	128.0		1024.0	
Mass wall (Note 5)	8.0	14.0	3.0	336.0	**0.0432**
Unframed wall (Note 5)				619.2	**0.0796**
Framed wall (Note 5)				68.8	**0.0088**

Note 1: Changes to Case P100A are highlighted with bold font.

Note 2: Solar energy transmitted through windows is assumed as distributed to interior opaque surfaces in proportion to their areas. Only the radiation not directly absorbed by lightweight furnishings (assumed to exist only for the purpose of calculating inside solar fraction) or not lost back out through windows is distributed to interior opaque surfaces.

Note 3: Insulated and framed exterior wall sections are defined in Figure 7-9 (Case L120A). ASHRAE framed area fraction of 0.22 is assumed for 2×6 24 in. O.C. construction.

Note 4: Insulated and framed floor and ceiling sections are defined in Figures 7-29 (Case P100A) and 7-10 (Case L120A), respectively. ASHRAE roof/ceiling framing area fraction of 0.1 applied to both ceiling and floor.

Note 5: Width is the length of interior walls from Figure 7-2 (Case L100A) and Figure 7-28 (Case P100A). Framed wall area is assumed to be 10% of gross wall area for 2×4 16 in. O.C. framing. Only one side of the wall is considered for listed area. This area is multiplied by 2 to determine solar fractions. Solar fractions shown are for just one side of the wall. Interior walls within the conditioned zone have been included for the purpose of modeling the effect of their mass. They are not intended to divide the conditioned zone into separately controlled zones.

Copyrighted material licensed to Sei Ito on 2020-06-26 for licensee's use only. All rights reserved. No further reproduction or distribution is permitted. Distributed by Techstreet for ASHRAE, www.techstreet.com

8. CLASS II OUTPUT REQUIREMENTS

8.1 Reporting Results

8.1.1 Standard Output Reports. The standard output reports included on the accompanying electronic media shall be used. Instructions regarding these reports are included in Normative Annex A2. Information required for this report includes the following:

a. Software name and version number
b. Modeling documentation using "S140outNotes.TXT" on the accompanying electronic media for the following:
   1. Software identifying information and operating requirements
   2. Modeling methods used when alternative methods are available in the software (as specified in Section 7.1.4)
   3. Equivalent modeling methods used when the software does not allow direct input of specified values (as specified in Section 7.1.5)
   4. Changes to source code for the purpose of running the tests, where such changes are not available in publicly released versions of the software (as specified in Section 7.1.8)
   5. Omitted test cases and results (as specified in Section 8.1.3)
   6. Anomalous results (as specified in Section 8.1.4)
c. Results for simulated cases using the following file on the accompanying electronic media: RESULTS7-2.XLS, sheet tab "Sec7-2out" for the building thermal envelope and fabric load tests of Section 7.2

For the specific output quantities required in the results report for each case, refer to the appropriate subsections of Section 7.2.

8.1.2 Simulation Input Files. All supporting data required for generating results with the tested software shall be saved, including the following:

a. Input files
b. Processed weather data
c. Intermediate files containing calculations used for developing inputs
d. A "Readme-softwarename-yymmdd.pdf" file that briefly describes the contents of the above files according to their file type (i.e., their ".xyz" file extension)

8.1.3 Omitted Test Cases. If a program being tested omits a test case, the modeler shall provide an explanation using the modeler report template provided in Normative Annex A2.

8.1.4 Discussion of Anomalous Results. Explanation of anomalous test results using the modeler report template provided in Normative Annex A2 shall be permitted but is not required.

8.2 Output Requirements for Building Thermal Envelope and Fabric Load Tests of Section 7.2. All results shall be entered into the appropriate standard output report (see Normative Annex A2) as specified below.

8.2.1 Tier 1 Tests. For the Tier 1 tests, generate output for comparison to the example results as shown in Table 8-1. Seasonal results shall be for heating and cooling seasons for the entire year or some other reasonable length as defined by the tool being tested. For software that designates heating and cooling seasons, enter Julian dates for first and last dates of the heating and cooling seasons designated by the software being tested where indicated in the accompanying file RESULTS7-2.XLS (see sheet "Sec7-2out").

Informative Note: Monthly example results and instructions for use of seasonal results are provided in Informative Annex B20.

8.2.2 Tier 2 Tests. For the Tier 2 tests, generate output for comparison to the example results as shown in Table 8-2. Seasonal results shall be for heating and cooling seasons for the entire year or some other reasonable length as defined by the tool being tested. For software that designates heating and cooling seasons, enter Julian dates for first and last dates of the heating and cooling seasons designated by the software being tested where indicated in the accompanying file RESULTS7-2.XLS (see sheet "Sec7-2out").

Informative Note: Monthly example results and instructions for use of these results are provided in Informative Annex B20.

Informative Note: In Table 8-2, for Cases P100A through P150A, the climate data for generating cooling load outputs is Colorad.TMY. This is because the passive solar design described in Cases P100A and P105A, while appropriate for Colorado Springs, Colorado, is inappropriate for Las Vegas, Nevada.

Copyrighted material licensed to Sei Ito on 2020-06-26 for licensee's use only.
All rights reserved. No further reproduction or distribution is permitted. Distributed by Techstreet for ASHRAE, www.techstreet.com

Table 8-1 HERS BESTEST Tier 1 Output Requirements

CASE	Annual (or Seasonal) Sensible Heating Load (10^6 Btu/y) for Listed Climate	Annual (or Seasonal) Sensible Cooling Load (10^6 Btu/y) for Listed Climate
L100A	CS	LV
L110A	CS	LV
L120A	CS	LV
L130A	CS	LV
L140A	CS	LV
L150A	CS	LV
L155A	CS	LV
L160A	CS	LV
L170A	CS	LV
L200A	CS	LV
L202A	CS	LV
L302A	CS	N/A
L304A	CS	N/A
L322A	CS	N/A
L324A	CS	N/A

CS = Simulate the case for Colorad.TMY (Colorado Springs, Colorado).
LV = Simulate the case for Lasvega.TMY (Las Vegas, Nevada).
N/A = Not applicable, do not generate output.

Table 8-2 HERS BESTEST Tier 2 Output Requirements

CASE	Annual (or Seasonal) Sensible Heating Load (10^6 Btu/y) for Listed Climate	Annual (or Seasonal) Sensible Cooling Load (10^6 Btu/y) for Listed Climate
L165A	CS	LV
P100A	CS	CS
P105A	CS	CS
P110A	CS	CS
P140A	CS	CS
P150A	CS	CS

CS = Simulate the case for Colorad.TMY.
LV = Simulate the case for Lasvega.TMY.

Copyrighted material licensed to Sei Ito on 2020-06-26 for licensee's use only.
All rights reserved. No further reproduction or distribution is permitted. Distributed by Techstreet for ASHRAE, www.techstreet.com

(This is a normative annex and is part of this standard.)

NORMATIVE ANNEX A1
WEATHER DATA

A1.1 Weather Data for Tests of Section 5.2

A1.1.1 Weather Data for Building Thermal Envelope and Fabric Load Tests of Sections 5.2.1, 5.2.2, and 5.2.3. The full-year weather data (DRYCOLD.TMY) provided with the accompanying electronic media shall be used for performing the tests called out in Sections 5.2.1, 5.2.2, and 5.2.3. Site and weather characteristics are summarized in Table A1-1. See Section A1.5 for details about TMY weather data file format.

A1.1.2 Weather Data for Ground-Coupled Slab-on-Grade Analytical Verification Tests of Section 5.2.4. The full-year weather data in the electronic media provided with this standard shall be used for performing the tests of Section 5.2.4 as assigned in Table A1-2. Site and weather characteristics are provided in Table A1-3. Specified weather data apply TMY2 weather data format as described in Normative Annex A1, Section A1.6.

Informative Note: This weather data file is based on Miami.TM2 but includes many data elements set to zero or approximate lower limits, approximate higher limits, or neutral (nonextreme) constant values.

A1.1.2.1 Harmonically Varying ODB *To,a* in Weather Files. For weather data files GC40a.TM2, GC40b.TM2, and GC70b.TM2, *To,a* varies hourly according to the following formula:

$$To,a = Tday - Tswingday \times \{\cos[(IHOUR - ILOWHOUR)/24 \times 2 \times PI]\}$$

where

$$Tday = Tmean - Tswingseason \times \{\cos[(IDAY\text{-}ILOWDAY)/365 \times 2 \times PI]\}$$

where

Tswingday	=	diurnal temperature swing (±) = 2°C (3.6°F), for 4°C (7.2°F) diurnal range from minimum to maximum
IHOUR	=	the daily hour counter from 1 to 24 with reset to 1 after end of day
ILOWHOUR	=	hour of lowest temperature = 4, for 4th hour
PI	=	3.1415927 (≈ π); cosine function uses radians
Tmean	=	annual mean temperature = 10°C (50°F)
Tswingseason	=	seasonal temperature variation (±) = 6°C (10.8°F), for 12°C (21.6°F) range (minimum to maximum) of average daily temperature over the year
IDAY	=	the day counter, from 1 to 365
ILOWDAY	=	the day of lowest temperature = 15, for January 15

Table A1-1 Site and Weather Summary for DRYCOLD.TMY Weather Data Used with Building Thermal Envelope and Fabric Load Tests

Weather type	Cold, clear winters/ hot, dry summers
Weather format	Typical Meteorological Year (TMY)
Latitude	39.8 degrees north
Longitude	104.9 degrees west
Altitude	1609 m
Time zone	7
Ground reflectance	0.2
Site	Flat, unobstructed, located exactly at weather station
Mean annual wind speed	4.02 m/s
Deep ground temperature	10°C
Mean annual ambient dry-bulb temperature	9.71°C
Minimum annual dry-bulb temperature	–24.39°C
Maximum annual dry-bulb temperature	35.00°C
Maximum annual wind speed	14.89 m/s
Heating degree-days (base 18.3°C)	3636.2°C-days
Cooling degree-days (base 18.3°C)	487.1°C-days
Mean annual dew-point temperature	–1.44°C
Mean annual humidity ratio	0.0047
Global horizontal solar radiation annual total	1831.82 kWh/(m^2· y)
Direct normal solar radiation annual total	2353.58 kWh/(m^2· y)
Direct horizontal solar radiation	1339.48 kWh/(m^2· y)
Diffuse horizontal solar radiation	492.34 kWh/(m^2· y)

From the above formulation, *To,a* varies over a range of 16°C (28.8°F), from a minimum of 2°C (35.6°F) to maximum of 18°C (64.4°F) over the year.

A1.1.2.2 Humidity Ratio, Dew-Point Temperature, Relative Humidity, and Atmospheric Pressure. The outdoor dew-point temperature and relative humidity shown in Table A1-3 correspond to a humidity ratio of 0.000007 kg_w/kg_{da} (lb_w/lb_{da}) at constant standard atmospheric pressure and given dry-bulb temperature as specified in Table A1-3.

Informative Note: The calculation of outdoor dew-point temperature and relative humidity applies common psychrometric formulae as shown in the 2001 *ASHRAE Handbook—Fundamentals*[B-30], Chapter 6, and elsewhere[B-31]. The calculation results in outdoor dew-point temperature equals –56.6°C

Copyrighted material licensed to Sei Ito on 2020-06-26 for licensee's use only. All rights reserved. No further reproduction or distribution is permitted. Distributed by Techstreet for ASHRAE, www.techstreet.com

Table A1-2 Weather Data for Ground-Coupled Slab-on-Grade Analytical Verification Tests

Data Files	Applicable Cases/Output	Sections
None	GC10a	5.2.4.2.1
GC30a.TM2	GC30a, GC30c	5.2.4.2.2, 5.2.4.3.1
GC30b.TM2	GC30b, GC60b	5.2.4.1.1, 5.2.4.1.6
GC65b.TM2	GC65b	5.2.4.1.7
GC40a.TM2	GC40a, GC40c, GC45c, GC55c, GC80c	5.2.4.2.3, 5.2.4.3.2, 5.2.4.3.3, 5.2.4.3.4, 5.2.4.3.5
GC40b.TM2	GC40b, GC45b, GC50b, GC55b, GC80b	5.2.4.1.2, 5.2.4.1.3, 5.2.4.1.4, 5.2.4.1.5, 5.2.4.1.9
GC70b.TM2	GC70b	5.2.4.1.8

Table A1-3 Site and Weather Summary for Ground-Coupled Slab-on-Grade Analytical Verification Tests

Weather type	Artificial conditions
Weather format	TMY2
Latitude	25.8 degrees north
Longitude (local site)	80.3 degrees west
Altitude	2 m (6.6 ft)
Time zone (standard meridian longitude)	5 (75 degrees west)
Site	Flat, unobstructed, located exactly at weather station
Dew-point temperature (constant)	–56.6°C (–69.9°F)[a]
Humidity ratio (constant)	0.000007 kg moisture/kg dry air (0.000007 lb moisture/lb dry air)
Global horizontal solar radiation annual total	0 MJ/m² (0 kBtu/ft²)
Direct normal solar radiation annual total	0 MJ/m² (0 kBtu/ft²)
Diffuse horizontal solar radiation annual total	0 MJ/m² (0 kBtu/ft²)
Extraterrestrial horizontal and direct normal radiation	Unchanged from original file
Total and opaque sky cover	10 tenths, implying the entire sky dome is covered by clouds to reduce exterior IR radiation exchange
Atmospheric pressure	1013 millibars (14.696 psia)
Visibility	20 km (12.4 mi) (rough annual average for Miami and Denver)
Ceiling height	2000 m (6562 ft) (rough annual average for Miami and Denver)
Present weather	No rain, hail, etc.
Precipitable water	0 mm (0 in.)
Aerosol optical depth	0.1 broadband turbidity (rough annual average of Miami and Denver)
Snow depth	0 cm (0 in.) with ≥88 days since last snow fall

Quantities that Vary between Data Sets

File Name	Mean Ambient Dry-Bulb Temperature	Mean Ambient Relative Humidity	Constant Annual Wind Speed
GC30a.TM2	10°C (50.0°F), constant	0.09%, constant [a]	40.0 m/s (89.48 mi/h) [b]
GC30b.TM2	10°C (50.0°F), constant	0.09%, constant [a]	19.9 m/s (44.52 mi/h) [b]
GC65b.TM2	10°C (50.0°F), constant	0.09%, constant [a]	1.0 m/s (2.24 mi/h) [b]
GC40a.TM2	10°C (50.0°F), harmonically varying	0.09%, harmonically varying [a]	40.0 m/s (89.48 mi/h) [b]
GC40b.TM2	10°C (50.0°F), harmonically varying	0.09%, harmonically varying [a]	19.9 m/s (44.52 mi/h) [b]
GC70b.TM2	10°C (50.0°F), harmonically varying	0.09%, harmonically varying [a]	1.0 m/s (2.24 mi/h) [b]

a. See Section A1.1.2.2.
b. See Section A1.1.2.3.

Copyrighted material licensed to Sei Ito on 2020-06-26 for licensee's use only. All rights reserved. No further reproduction or distribution is permitted. Distributed by Techstreet for ASHRAE, www.techstreet.com

Table A1-4 Weather Data for Space-Cooling Equipment Performance Analytical Verification Tests

Data Files	Applicable Cases	Applicable Cases' Sections
CE110.TMY or CE110A.TM2	CE110, CE120, CE140, CE150, CE160, CE170, CE180, CE190	5.3.2.1.1; 5.3.2.1.2; 5.3.2.1.4; 5.3.2.2.1; 5.3.2.2.2; 5.3.2.2.4; 5.3.2.2.5; 5.3.2.2.7
CE200.TMY or CE200A.TM2	CE200	5.3.2.2.9
CE165.TMY or CE165A.TM2	CE165	5.3.2.2.3
CE100.TMY or CE100A.TM2	CE100, CE130, CE185, CE195	5.3.1; 5.3.2.1.3; 5.3.2.2.6; 5.3.2.2.8

(–69.9°F) (TMY2 documentation indicates –60°C [–76.0°F] is the lower limit for TMY2 data), and outdoor relative humidity equals 0.09% (which rounds to 0% in the weather data). In weather data with harmonically varying outdoor dry-bulb (ODB) temperature, atmospheric pressure and dew-point temperature were set to constant values. Relative humidity was adjusted to be consistent with other listed values; however, as TMY2 format limits the precision of listed relative humidity, it still appears as constant 0%.

A1.1.2.3 Wind Speed. Wind speeds for provided weather data are as shown in Table A1-3.

Informative Note: Wind speeds were calculated corresponding with the three exterior surface convective coefficients specified among the test cases in Section 5.2.4. Extrapolating (see 2005 *ASHRAE Handbook—Fundamentals*, pp. 25.1)[B-32] equations described elsewhere [B-33], and assuming a ground surface roughness equivalent to that typical for brick or rough plaster, the combined radiative/convective *h,ext* coefficient can be calculated. Subtracting out the equivalent radiative portion of the combined coefficient of 4.63 W/(m^2·K) [B-29] approximates the convective-only *h,ext*. Using this calculation scheme results in the following:

a. For a wind speed of 1.0 m/s (2.24 mi/h), the combined convective/radiative coefficient is 16.58 W/(m^2·K) (2.92 Btu/[h·ft^2·°F]), and the convective-only *h,ext* is 11.95 W/(m^2·K) (2.10 Btu/[h·ft^2·°F]).
b. For a wind speed of 19.9 m/s (44.52 mi/h), the combined radiative/convective *h,ext* is 104.47 W/(m^2·K) (18.40 Btu/[h·ft^2·°F]), and the convective-only *h,ext* = 99.84 W/(m^2·K) (17.58 Btu/[h·ft^2·°F]) (rounds to 100 W/[m^2·K] [17.6 Btu/(h·ft^2·°F)]).
c. For a wind speed of 40 m/s (89.48 mi/h), the combined radiative/convective *h,ext* is 219.89 W/(m^2·K) (38.72 Btu/[h·ft^2·°F]), and the convective-only *h,ext* = 215.26 W/(m^2·K) (37.91 Btu/[h·ft^2·°F]); because some whole-building energy simulation software may flag weather data values outside of TMY2 documented limits, a value greater than 40 m/s (89.5 mi/h) was not used (99.9 m/s [223.5 mi/h] is the format limit, but 40 m/s [89.5 mi/h] is the documented limit).

A1.1.2.4 Solar Radiation. Solar radiation is set to 0 as specified in Table A1-3.

A1.2 Weather Data for Space-Cooling and Space-Heating Equipment Performance Tests

A1.2.1 Space-Cooling Equipment Analytical Verification Test Weather Data. The weather data listed in Table A1-4 shall be used as specified in Sections 5.3.1 and 5.3.2. Ambient dry-bulb and dew-point temperatures are constant in these weather files; constant values of ambient dry-bulb temperature vary among the files. Site and weather characteristics are summarized in Tables A1-5 and A1-6 for the TMY and TMY2 data files, respectively. See Sections A1.5 and A1.6, respectively, for details about the TMY and TMY2 weather data file formats.

Informative Note: These data files represent TMY and TMY2 format weather data files, respectively, with modifications so that the initial fundamental series of mechanical equipment tests may be very tightly controlled. The TMY-format data are three-month-long data files used in the original field trials of the test procedure; the TMY2-format data are year-long data files that may be more convenient for users. For the purposes of the test cases of Section 5.3.1 and 5.3.2, which apply a near-adiabatic building envelope, the TMY and TMY2 data sets are equivalent. (There are small differences in solar radiation, wind speed, etc., that result in a sensible load difference of 0.2% to 0.3% in cases with low internal gains [i.e., CE130, CE140, CE190, and CE195]. This percentage load difference is less [0.01% to 0.04%] for the other cases because they have higher internal gains. These TMY and TMY2 data are not equivalent for use with a non-near-adiabatic building envelope.)

A1.2.2 Space-Cooling Equipment Comparative Test Weather Data. The full-year weather data file CE300.TM2 provided with the accompanying electronic media shall be used for performing the tests specified in Sections 5.3.3 and 5.3.4. Site and weather characteristics of the data file are summarized in Table A1-7. This data file represents TMY2 format weather data; see Section A1.6 for details about TMY2 weather data file format.

A1.2.3 Space-Heating Equipment Performance Test Weather Data. Weather data listed in Table A1-8 shall be used as specified in Section 5.4. These data are presented in WYEC2 format. See Section A1.7 for a detailed description of the WYEC2 format. Site characteristics are summarized in Table A1-9.

Five full-year weather data files are used in the test suite:

- Weather file HE100W.WY2 has a constant outdoor temperature of –30°C.
- Weather files HE120W.WY2 and HE130W.WY2 have constant outdoor temperatures of 0°C and +20°C, respectively.

Copyrighted material licensed to Sei Ito on 2020-06-26 for licensee's use only. All rights reserved. No further reproduction or distribution is permitted. Distributed by Techstreet for ASHRAE, www.techstreet.com

Table A1-5 Site and Weather Summary for Space-Cooling Equipment Performance Analytical Verification Tests—TMY Data

Weather type		Artificial conditions
Weather format		TMY
Latitude		25.8 degrees north
Longitude (local site)		80.3 degrees west
Altitude		2 m (6.6 ft)
Time zone (standard meridian longitude)		5 (75 degrees west)
Ground reflectivity		0.2
Site		Flat, unobstructed, located exactly at weather station
Dew-point temperature (constant)		14.0°C (57.2°F)
Humidity ratio		0.010 kg moisture/kg dry air (0.010 lb moisture/lb dry air)
Mean three-month wind speed		4.4 m/s (9.8 mi/h)
Maximum three-month wind speed		12.4 m/s (27.7 mi/h)
Global horizontal solar radiation three-month total		1354 MJ/m² (119.2 kBtu/ft²)
Direct normal solar radiation three-month total		1350 MJ/m² (118.8 kBtu/ft²)
Direct horizontal solar radiation three-month total		817 MJ/m² (71.9 kBtu/ft²)
Diffuse horizontal solar radiation three-month total		536 MJ/m² (47.2 kBtu/ft²)
Quantities that Vary between Data Sets	**Ambient Dry-Bulb Temperature (constant)**	**Ambient Relative Humidity**
CE110.TMY	29.4°C (85.0°F)	39%
CE200.TMY	35.0°C (95.0°F)	28%
CE165.TMY	40.6°C (105.0°F)	21%
CE100.TMY	46.1°C (115.0°F)	16%

- Weather file HE140W.WY2 has the outdoor temperature varying sinusoidally over each 24-hour period from –20°C to +20°C.
- Weather file HE210W.WY2 represents a more realistic weather set from a heating climate.

Informative Note: Many simulation programs use TMY or WYEC weather data, wherein the hourly time convention is solar time. For the tests of Section 5.4, solar gains are excluded. Therefore, solar time, longitude, latitude, time zone, and ground reflectivity will not impact the simulation results.

Table A1-6 Site and Weather Summary for Space-Cooling Equipment Performance Analytical Verification Tests—TMY2 Data

Weather type		Artificial conditions
Weather format		TMY2
Latitude		25.8 degrees north
Longitude (local site)		80.3 degrees west
Altitude		2 m (6.6 ft)
Time zone (standard meridian longitude)		5 (75 degrees west)
Ground reflectivity		0.2
Site		Flat, unobstructed, located exactly at weather station
Dew-point temperature (constant)		14.0°C (57.2°F)
Humidity ratio		0.010 kg moisture/kg dry air (0.010 lb moisture/lb dry air)
Mean annual wind speed		4.3 m/s (9.7 mi/h)
Maximum annual wind speed		13.9 m/s (31.1 mi/h)
Global horizontal solar radiation annual total		6453 MJ/m² (568 kBtu/ft²)
Direct normal solar radiation annual total		5418 MJ/m² (477 kBtu/ft²)
Diffuse horizontal solar radiation annual total		2914 MJ/m² (257 kBtu/ft²)
Quantities that Vary between Data Sets	**Ambient Dry-Bulb Temperature (constant)**	**Ambient Relative Humidity**
CE110A.TM2	29.4°C (85.0°F)	39%
CE200A.TM2	35.0°C (95.0°F)	28%
CE165A.TM2	40.6°C (105.0°F)	21%
CE100A.TM2	46.1°C (115.0F)	16%

A1.3 Weather Data for Air-Side HVAC Equipment Analytical Verification Tests. For programs that do not allow direct entry of ambient conditions as specified in Section 5.5, the full-year weather data on the accompanying electronic media shall be used for performing the tests of Section 5.5 as assigned in Table A1-10. Weather file and site characteristics are summarized in Table A1-11. These data files represent TMY2 format weather data; see Section A1.6 for details about TMY2 weather data file format.

Informative Note: These weather data files are based on Miami.TM2 but have a number of data elements set to constant values and solar radiation OFF for more precise control of test-case conditions. Additionally, the weather data includes

Copyrighted material licensed to Sei Ito on 2020-06-26 for licensee's use only. All rights reserved. No further reproduction or distribution is permitted. Distributed by Techstreet for ASHRAE, www.techstreet.com

Table A1-7 Site and Weather Summary for Space-Cooling Equipment Performance Comparative Tests

Weather type	Hot, humid summer
Weather format	TMY2
Latitude	30.0 degrees north
Longitude (local site)	90.3 degrees west
Altitude	3 m (9.8 ft)
Time zone (standard meridian longitude)	6 (90 degrees west)
Ground reflectivity	0.2
Site	Flat, unobstructed, located exactly at weather station
Mean annual outdoor dry-bulb temperature (ODB)	19.9°C (67.8°F)
Minimum annual ODB	–4.4°C (24.0°F)
Maximum annual ODB	35.0°C (95.0°F)
Mean annual dew-point temperature	14.7°C (58.5°F)
Mean annual humidity ratio	0.0116 kg moisture/kg dry air (0.0116 lb moisture/lb dry air)
Mean annual wind speed	3.6 m/s (8.1 mph)
Maximum annual wind speed	13.9 m/s (31.1 mph)
Global horizontal solar radiation annual total	1680 kWh/m (532.5 kBtu/ft^2)
Direct normal solar radiation annual total	1498 kWh/m (474.8 kBtu/ft^2)

Table A1-8 Weather Data for Space-Heating Equipment Performance Tests

Data Files	Applicable Cases	Applicable Cases' Sections
HE100W.WY2	HE100, HE110	5.4.1, 5.4.2.1
HE120W.WY2	HE120	5.4.2.2
HE130W.WY2	HE130	5.4.2.3
HE140W.WY2	HE140, HE150, HE160, HE170	5.4.2.4, 5.4.2.5, 5.4.2.6, 5.4.2.7
HE210W.WY2	HE210, HE220, HE230	5.4.3.1, 5.4.3.2, 5.4.3.3

Table A1-9 Site Summary for Space-Heating Equipment Performance Tests—WYEC2 Data

Weather type	Artificial conditions
Weather format	WYEC2
Latitude	45.32 degrees north
Longitude (local site)	75.67 degrees west
Altitude	115 m (380 ft)
Time zone (standard meridian longitude)	5 (75 degrees west)
Ground reflectivity	0.2
Site	Flat, unobstructed, located exactly at weather station

many data elements set to 0 or approximate lower limits and other data elements set to neutral (nonextreme) constant values.

A1.4 Weather Data for Section 7 Tests. Full-year TMY weather data listed in Table A1-12 shall be used as specified in Section 7.2. Site and weather characteristics are summarized in Tables A1-13 and A1-14. See Section A1.5 for details about TMY weather data file format.

A1.5 TMY Weather Data Format. For those programs that do not have Typical Meteorological Year (TMY) weather processors, TMY weather data file format is provided in Table A1-15.

Informative Note: This reprint of tables also includes some additional notes based on experience with TMY data. If this summary is insufficient, the complete documentation on TMY weather data [B-35] can be obtained from the National Climatic Data Center (NCDC) in Asheville, North Carolina. Their address is Federal Building, Asheville, NC 28801-2733 (Phone: 828-271-4800). Informative Annex B2 contains additional background information regarding TMY weather data.

Informative Note: The hourly time convention for TMY weather data is solar time, where

$$\text{Solar time} = \text{Standard time} + (4 \text{ minutes/degree}) \times (Lst - Lloc) + E$$

and where

Lst = standard meridian longitude, degrees

$Lloc$ = local site longitude, degrees

E = $229.2[0.000075 + 0.001868 \cos(B) - 0.032077 \sin(B) - 0.014615 \cos(2B) - 0.04089 \sin(2B)]$, minutes

where

B = $360(n - 81)/365$, degrees

n = day of the year, $1 \le n \le 365$

E varies roughly ±15 minutes throughout the year because of cosmology.

Additional background information on the equation of time may be found in the references [B-36]. Additional background regarding the difference between solar time and standard time is included in Informative Annex B11 (Section B11.1.3).

A1.6 TMY2 Weather Data Format. TMY2 weather data file format is described below.

Informative Note: This information is provided for those programs that do not have TMY2 weather processors. If this summary is insufficient, the complete documentation on TMY2 weather data [B-37] can be obtained at http://rredc.nrel.gov/solar/pubs/tmy2.

A1.6.1 File Header. The first record of each file is the file header that describes the station. The file header contains the WBAN number, city, state, time zone, latitude, longitude, and elevation. The field positions and definitions of these header elements are given in Table A1-16, along with sample FORTRAN and C formats for reading the header. A sample of a file header and data for January 1 is shown in Figure A1-1.

A1.6.2 Hourly Records. Following the file header, 8760 hourly data records provide one year of solar radiation, illuminance, and meteorological data, along with their source and uncertainty flags. Table A1-17 provides field positions,

Copyrighted material licensed to Sei Ito on 2020-06-26 for licensee's use only. All rights reserved. No further reproduction or distribution is permitted. Distributed by Techstreet for ASHRAE, www.techstreet.com

element definitions, and sample FORTRAN and C formats for reading the hourly records.

Each hourly record begins with the year (field positions 2 through 3) from which the typical month was chosen, followed by the month, day, and hour information in field positions 4 through 9. ***The times are in Local Standard Time.***

Informative Note: Previous TMYs based on SOLMET/ERSATZ data are in solar time.

Informative Note: For solar radiation and illuminance elements, the data values represent the energy received during the 60 minutes *preceding the hour indicated*. For meteorological elements (with a few exceptions), observations or measurements were made *at the hour indicated*. A few of the meteorological elements had observations, measurements, or estimates made at daily instead of hourly intervals. Consequently, the data values for broadband aerosol optical depth, snow depth, and days since last snowfall represent the values available for the day indicated.

A1.7 WYEC2 Weather Data Format. WYEC2 weather data file format is described below.

Informative Note: This information is provided for those programs that do not have Weather Year for Energy Calculations 2 (WYEC2) weather processors.

A1.7.1 Weather files in WYEC2 format consist of 8760 identical fixed-format records (8784 records for leap years), one for each hour of each day of the year. Each record is 116 characters (plus two for CR/LF) in length and is organized according to Table A1-18.

Informative Note: Further information on WYEC2 data is available elsewhere [B-34].

A1.7.2 All WYEC2 values are for Local Standard Time. Irradiance and illuminance fields contain data integrated over the hour. Meteorological fields contain observations made at the end of the hour.

Informative Note: For example, hour 12 contains irradiance/illuminance from hour 11 to 12 and meteorological observations made at hour 12.

Copyrighted material licensed to Sei Ito on 2020-06-26 for licensee's use only.
All rights reserved. No further reproduction or distribution is permitted. Distributed by Techstreet for ASHRAE, www.techstreet.com

Copyrighted material licensed to Sei Ito on 2020-06-26 for licensee's use only.
All rights reserved. No further reproduction or distribution is permitted. Distributed by Techstreet for ASHRAE, www.techstreet.com

Table A1-10 Weather Data for Air-Side HVAC Equipment Performance Analytical Verification Tests

Data Files	Applicable Cases	Sections
AE101.TM2	AE101, AE201, AE301, AE401	5.5.1.1, 5.5.2.1, 5.5.3.1, 5.5.4.1
AE103.TM2	AE103, AE203, AE303, AE403	5.5.1.2.1, 5.5.2.2.1, 5.5.3.2.1, 5.5.4.2.1
AE104.TM2	AE104, AE204, AE304, AE404	5.5.1.2.2, 5.5.2.2.2, 5.5.3.2.2, 5.5.4.2.2
AE105.TM2	AE205, AE245, AE305, AE345, AE405, AE445	5.5.2.2.3, 5.5.2.3.2, 5.5.3.2.3, 5.5.3.3.2, 5.5.4.2.3, 5.5.4.3.2
AE106.TM2	AE206, AE226, AE306, AE326, AE406, AE426	5.5.2.2.4, 5.5.2.3.1, 5.5.3.2.4, 5.5.3.3.1, 5.5.4.2.4, 5.5.4.3.1

Table A1-11 Site and Weather Summary for Air-Side HVAC Equipment Performance Analytical Verification Tests

Weather type	Artificial conditions
Weather format	TMY2
Latitude	25.8 degrees north
Longitude (local site)	80.3 degrees west
Altitude	0 m (0 ft) [a]
Time zone (standard meridian longitude)	5 (75 degrees west)
Site	Flat, unobstructed, located exactly at weather station
Atmospheric pressure (constant)	1013 millibars (14.692 psia) [a]
Wind speed (constant)	4.3 m/s (9.62 miles/h)
Global horizontal solar radiation annual total	0 kWh/m^2 (0 kBtu/ft^2)
Direct normal solar radiation annual total	0 kWh/m^2 (0 kBtu/ft^2)
Diffuse horizontal solar radiation annual total	0 kWh/m^2 (0 kBtu/ft^2)
Illuminance	0 kWh/m^2 (0 kBtu/ft^2)
Total and opaque sky cover	10 tenths [b]
Visibility	20 km [c]
Ceiling height	2000 m [c]
Aerosol optical depth	0.1 broadband turbidity [c]
Present weather	No rain, hail, snow, other precipitation, fog, smoke, haze, nor blowing dust/sand
Precipitable water	0 mm
Snow depth	0 cm with ≥88 days since last snowfall

Quantities That Vary between Data Sets

Weather File Name	AE101.TM2	AE103.TM2	AE104.TM2	AE105.TM2	AE106.TM2
Dry-bulb temperature	–29.0°C (–20.20F)	15.5°C (59.90°F)	26.9°C (80.42°F)	24.9°C (76.82°F)	23.0°C (73.40°F)
Dew-point temperature	–29.0°C (–20.20F)	–3.0°C (26.60°F)	22.1°C (71.78°F)	2.4°C (36.32°F)	20.9°C (69.62°F)
Relative humidity [d]	100%	27%	75%	23%	88%

a. ***Informative Note:*** The weather data file indicates 0 m altitude, which corresponds with atmospheric pressure of 101325 Pa (14.696 psia) specified in Section 5.5.1.1.7. However, the weather file atmospheric pressure precision is limited to four digits by the weather file format such that 1013 millibars (101300 Pa = 14.692 psia) is listed in the weather files. The effect of modeling with 101325 versus 101300 Pa is negligible (<0.05% on cooling-coil latent loads) as described in Appendix A of the originating test suite adaptation report [B-6].

b. ***Informative Note:*** This setting is intended to reduce exterior infrared radiation exchange.

c. ***Informative Note:*** Rough annual average for Miami and Denver.

d. ***Informative Note:*** The weather file relative humidity precision is limited to integer percent values by the weather file format. Among the test cases, weather file relative humidities differ from relative humidities specified in various tables of Section 5.5 by <0.22%. The effects of modeling with weather file relative humidities versus specified relative humidities or versus weather file (specified) dew-point temperatures are small (<0.3% on cooling-coil latent loads) as described in Appendix A of the originating test suite adaptation report [B-6].

Table A1-12 Weather Data for Section 7 Tests

Data Files	Applicable Cases/Output	Sections
Colorad.TMY	Heating-load results for all Tier 1 cases (L100A through L324A)	7.2.1, 7.2.2
	Heating-load results for Tier 2 Case L165A	7.2.3.1
	Heating- and cooling-load results for Tier 2 cases P100A through P150A	7.2.3.2 through 7.2.3.6
Lasvega.TMY	Cooling-load results for Tier 1 cases L100A through L202A	7.2.1, 7.2.2.1 through 7.2.2.10
	Cooling-load results for Tier 2 Case L165A	7.2.3.1

Table A1-13 Site and Weather Data Summary for Section 7 Tests Specifying Colorad.TMY [a]

Weather type	Cold, clear winters
Weather format	Typical Meteorological Year (TMY)
Latitude	38.8 degrees north
Longitude	104.7 degrees west
Altitude	6145 ft
Time zone	7
Ground reflectivity	0.2
Site	Flat, unobstructed, located exactly at weather station
Mean annual wind speed	10.7 mph
Mean annual ambient dry-bulb temperature	49.43°F
Mean annual daily temperature range	25.5°F
Minimum annual dry-bulb temperature	–9.9°F
Maximum annual dry-bulb temperature	93.9°F
Maximum annual wind speed	36.9 mph
Heating degree-days (Base 65°F)	6031.0°F· days [b]
Cooling-degree days (Base 65°F)	489.5°F· days [b]
Mean annual dew-point temperature	27.9°F
Mean annual humidity ratio	0.0047
Global horizontal solar radiation annual total	584.33 kBtu/(ft^2· y)
Direct normal solar radiation annual total	759.67 kBtu/(ft^2· y)
Direct horizontal solar radiation	430.27 kBtu/(ft^2· y)
Diffuse horizontal solar radiation	154.07 kBtu/(ft^2· y)

a. Unless otherwise noted, values are SERIRES/SUNCODE weather outputs.
b. From DOE2.1E weather processor summary.

Copyrighted material licensed to Sei Ito on 2020-06-26 for licensee's use only.
All rights reserved. No further reproduction or distribution is permitted. Distributed by Techstreet for ASHRAE, www.techstreet.com

Table A1-14 Site and Weather Data Summary for Section 7 Tests Specifying Lasvega.TMY [a]

Weather type	Hot, dry summers
Weather format	Typical Meteorological Year (TMY)
Latitude	36.1 degrees north
Longitude	115.2 degrees west
Altitude	2178 ft
Time zone	8
Ground reflectivity	0.2
Site	Flat, unobstructed, located exactly at weather station
Mean annual wind speed	9.6 mph
Mean annual ambient dry-bulb temperature	66.69°F
Mean annual daily temperature range	23.6°F
Minimum annual dry-bulb temperature	23.0°F
Maximum annual dry-bulb temperature	113.0°F
Maximum annual wind speed	35.8 mph
Heating-degree days (Base 65°F)	2415.0°F· days [b]
Cooling-degree days (Base 65°F)	3025.0°F· days [b]
Mean annual dew-point temperature	28.1°F
Mean annual humidity ratio	0.0040
Global horizontal solar radiation annual total	687.38 kBtu/(ft^2· y)
Direct normal solar radiation annual total	872.62 kBtu/(ft^2· y)
Direct horizontal solar radiation	528.86 kBtu/(ft^2· y)
Diffuse horizontal solar radiation	158.52 kBtu/(ft^2· y)

a. Unless otherwise noted, values are SERIRES/SUNCODE weather outputs.
b. From DOE2.1E weather processor summary.

Copyrighted material licensed to Sei Ito on 2020-06-26 for licensee's use only.
All rights reserved. No further reproduction or distribution is permitted. Distributed by Techstreet for ASHRAE, www.techstreet.com

Table A1-15 Typical Meteorological Year Data Format

TAPE DECK
9734

Tape Field Number [a]	Tape Positions [a]	Element	Tape Configuration	Code Definitions and Remarks
002	001–005	WBAN station number	01001–98999	Unique number used to identify each station
003	006–015 006–007 008–009 010–011 012–015	Solar time Year Month Day Hour	 00–99 01–12 01–31 0001–2400	 Year of observation, 00–99 = 1900–1999 Month of observation, 01–12 = Jan.–Dec. Day of month End of the hour of observation in solar time (hours and minutes)
004	016–019	Local Standard Time	0000–2359	Local Standard Time in hours and minutes corresponding to end of solar hour indicated in field 003. For some weather stations, add 30 minutes to the Local Standard Time on the tape [b].
101	020–023	Extraterrestrial radiation	0000–4957	Amount of solar energy in kJ/m^2 received at top of atmosphere during solar hour ending at time indicated in field 003, based on solar constant = 1377 J/(m^2 · s). **0000 = nighttime values for extraterrestrial radiation, and 80000 = corresponding nighttime value in field 108. 99999 = nighttime values defined as zero kJ/m^2 for stations noted as "rehabilitated" in the station list [c].**
102 Use for direct normal solar radiation.	024–028 024 025–028	Direct radiation Data code indicator [d] Data [e]	 0–9 0000–4957	Portion of radiant energy in kJ/m^2 received at the pyrheliometer directly from the sun during solar hour ending at time indicated in field 003. **99999 = nighttime values defined as 0 kJ/m^2**.
103	 029 030–033	Diffuse radiation Data code indicator [d] Data [e]	 0–9 0000–4957	Amount of radiant energy in kJ/m^2 received at the instrument indirectly from reflection, scattering, etc., during the solar hour ending at the time indicated in field 003. ***Informative Note:*** Diffuse data not available.
104	034–038 034 035–038	Net radiation Data code indicator [d] Data [e]	 0–9 2000–8000	Difference between the incoming and outgoing radiant energy in kJ/m^2 during the solar hour ending at the time indicated in field 003. A constant of 5000 has been added to all net radiation data. ***Informative Note:*** Net radiation data not available.
105	039–043 039 040–043	Global radiation on a tilted surface Data code indicator [d] Data [e]	 0–9 0000–4957	Total of direct and diffuse radiant energy in kJ/m^2 received on a tilted surface (tilt angle indicated in station-period of record list) during solar hour ending at the time indicated in field 003. ***Informative Note:*** Data not available.
	044–058	Global radiation on a horizontal surface		Total of direct and diffuse radiant energy in kJ/m^2 received on a horizontal surface by a pyranometer during solar hour ending at the time indicated in field 003.

a. Tape positions are the precise column locations of data. Tape field numbers are ranges representing topical groups of tape positions.
b. This remark applies to the DRYCOLD.TMY weather data provided with this test procedure.
c. DRYCOLD.TMY is not defined as a "rehabilitated" station.
d. Note for Fields 102–110: Data code indicators are as follows:
0 = observed data, 1 = estimated from model using sunshine and cloud data, 2 = estimated from model using cloud data, 3 = estimated from model using sunshine data, 4 = estimated from model using sky condition data, 5 = estimated from linear interpolation, 6 = reserved for future use, 7 = estimated from other model (see individual station notes in SOLMET: Volume 1), 8 = estimated without use of a model, 9 = missing data follows (see model description in SOLMET: Volume 2).
e. "9"s may represent zeros or missing data or the quantity nine depending on the positions in which they occur. Except for tape positions 001–023 in fields 002–101, elements with a tape configuration of 9s indicate missing or unknown data.

Copyrighted material licensed to Sei Ito on 2020-06-26 for licensee's use only.
All rights reserved. No further reproduction or distribution is permitted. Distributed by Techstreet for ASHRAE, www.techstreet.com

Table A1-15 Typical Meteorological Year Data Format *(Continued)*

TAPE DECK
9734

Tape Field Number [a]	Tape Positions [a]	Element	Tape Configuration	Code Definitions and Remarks
106	044–048 044 045–048	Observed data Data code indicator [d] Data [e]	 0–9 0000–4957	Observed value. ***Informative Note:*** These data are not corrected. Recommend use of data in field 108.
107	049–053 049 050–053	Engineering corrected data Data code indicator[d] Data [e]	 0–9 0000–4957	***Informative Note:*** Recommend use of data in field 108. Observed value corrected for known scale changes, station moves, recorder and sensor calibration changes, etc.
108 Use for total horizontal solar radiation.	054–058 054 055–058	Standard year Corrected data Data code indicator [d] Data [e]	 0–9 000–4957	Observed value adjusted to Standard Year Model. This model yields expected sky irradiance received on a horizontal surface at the elevation of the station. The value includes the effects of clouds. ***Informative Note:*** All nighttime values coded as 80000 except stations noted as rehabilitated in the station list; for those stations, nighttime values are coded 99999 [c].
109, 110	059–068 059–064 060–063 065–068	Additional radiation measurements Data code indicators[d] Data [e] Data [e]	0–9	Supplemental fields A and B for additional radiation measurements; type of measurement specified in station-period of record list.
111	069–070	Minutes of sunshine	00–60	For Local Standard Hour most closely matching solar hour. ***Informative Note:*** Data available only for when observations were made.
201	071–072	Time of TD 1440 Observations	00–23	Local Standard Hour of TD 1440 Meteorological Observation that comes closest to midpoint of the solar hour for which solar data are recorded.
202	073–076	Ceiling height	0000–3000 7777 8888	Ceiling height in dekametres (dam = m × 10^1); ceiling is defined as opaque sky cover of 0.6 or greater. 0000–3000 = 0 to 30,000 m 7777 = unlimited; clear 8888 = unknown height of cirroform ceiling

a. Tape positions are the precise column locations of data. Tape field numbers are ranges representing topical groups of tape positions.
b. This remark applies to the DRYCOLD.TMY weather data provided with this test procedure.
c. DRYCOLD.TMY is not defined as a "rehabilitated" station.
d. Note for Fields 102–110: Data code indicators are as follows:
0 = observed data, 1 = estimated from model using sunshine and cloud data, 2 = estimated from model using cloud data, 3 = estimated from model using sunshine data, 4 = estimated from model using sky condition data, 5 = estimated from linear interpolation, 6 = reserved for future use, 7 = estimated from other model (see individual station notes in SOLMET: Volume 1), 8 = estimated without use of a model, 9 = missing data follows (see model description in SOLMET: Volume 2).
e. "9"s may represent zeros or missing data or the quantity nine depending on the positions in which they occur. Except for tape positions 001–023 in fields 002–101, elements with a tape configuration of 9s indicate missing or unknown data.

Copyrighted material licensed to Sei Ito on 2020-06-26 for licensee's use only.
All rights reserved. No further reproduction or distribution is permitted. Distributed by Techstreet for ASHRAE, www.techstreet.com

Table A1-15 Typical Meteorological Year Data Format *(Continued)*

TAPE DECK
9734

Tape Field Number [a]	Tape Positions [a]	Element	Tape Configuration	Code Definitions and Remarks
203	077–081 077 078–081	Sky condition Indicator Sky condition	 0 0000–8888	Identifies observation after June 1, 1951. Coded by layer in ascending order; four layers are described; if fewer than four layers are present, the remaining positions are coded 0. The code for each layer is as follows: 0 = Clear or less than 0.1 cover 1 = Thin scattered (0.1 to 0.5 cover) 2 = Opaque scattered (0.1 to 0.5 cover) 3 = Thin broken (0.6 to 0.9 cover) 4 = Opaque broken (0.6 to 0.9 cover) 5 = Thin overcast (1.0 cover) 6 = Opaque overcast (1.0 cover) 7 = Obscuration 8 = Partial obscuration
204	082–085	Visibility	0000–1600 8888	Prevailing horizontal visibility in hectometres (hm = m × 10^2) 0000–1600 = 0 to 160 kilometres 8888 = unlimited
205	086–093 086	Weather Occurrence of thunderstorm, tornado, or squall	0–4	0 = None 1 = Thunderstorm—lightning and thunder. Wind gusts less than 50 knots and hail, if any, less than 3/4 in. diameter. 2 = Heavy or severe thunderstorm—frequent intense lightning and thunder. Wind gusts 50 knots or greater and hail, if any, 3/4 in. or greater diameter. 3 = Report of tornado or waterspout. 4 = Squall (sudden increase of wind speed by at least 16 knots, reaching 22 knots or more and lasting for at least one minute).
	087	Occurrence of rain, rain showers, or freezing rain	0–8	0 = None 1 = Light rain 2 = Moderate rain 3 = Heavy rain 4 = Light rain showers 5 = Moderate rain showers 6 = Heavy rain showers 7 = Light freezing rain 8 = Moderate or heavy freezing rain

a. Tape positions are the precise column locations of data. Tape field numbers are ranges representing topical groups of tape positions.
b. This remark applies to the DRYCOLD.TMY weather data provided with this test procedure.
c. DRYCOLD.TMY is not defined as a "rehabilitated" station.
d. Note for Fields 102–110: Data code indicators are as follows:
0 = observed data, 1 = estimated from model using sunshine and cloud data, 2 = estimated from model using cloud data, 3 = estimated from model using sunshine data, 4 = estimated from model using sky condition data, 5 = estimated from linear interpolation, 6 = reserved for future use, 7 = estimated from other model (see individual station notes in SOLMET: Volume 1), 8 = estimated without use of a model, 9 = missing data follows (see model description in SOLMET: Volume 2).
e. "9"s may represent zeros or missing data or the quantity nine depending on the positions in which they occur. Except for tape positions 001–023 in fields 002–101, elements with a tape configuration of 9s indicate missing or unknown data.

Copyrighted material licensed to Sei Ito on 2020-06-26 for licensee's use only.
All rights reserved. No further reproduction or distribution is permitted. Distributed by Techstreet for ASHRAE, www.techstreet.com

Table A1-15 Typical Meteorological Year Data Format *(Continued)*

TAPE DECK
9734

Tape Field Number [a]	Tape Positions [a]	Element	Tape Configuration	Code Definitions and Remarks
205 (contd.)	088	Occurrence of drizzle, freezing drizzle	0–6	0 = None 1 = Light drizzle 2 = Moderate drizzle 3 = Heavy drizzle 4 = Light freezing drizzle 5 = Moderate freezing drizzle 6 = Heavy freezing drizzle
	089	Occurrence of snow, snow pellets, or ice crystals	0–8	0 = None 1 = Light snow 2 = Moderate snow 3 = Heavy snow 4 = Light snow pellets 5 = Moderate snow pellets 6 = Heavy snow pellets 7 = Light ice crystals 8 = Moderate ice crystals Beginning April 1963, intensities of ice crystals were discontinued. All occurrences since this date are recorded as an 8.
	090	Occurrence of snow showers or snow grains	0–6	0 = None 1 = Light snow showers 2 = Moderate snow showers 3 = Heavy snow showers 4 = Light snow grains 5 = Moderate snow grains 6 = Heavy snow grains Beginning April 1963, intensities of snow grains were discontinued. All occurrences since this date are recorded as a 5.

a. Tape positions are the precise column locations of data. Tape field numbers are ranges representing topical groups of tape positions.
b. This remark applies to the DRYCOLD.TMY weather data provided with this test procedure.
c. DRYCOLD.TMY is not defined as a "rehabilitated" station.
d. Note for Fields 102–110: Data code indicators are as follows:
0 = observed data, 1 = estimated from model using sunshine and cloud data, 2 = estimated from model using cloud data, 3 = estimated from model using sunshine data, 4 = estimated from model using sky condition data, 5 = estimated from linear interpolation, 6 = reserved for future use, 7 = estimated from other model (see individual station notes in SOLMET: Volume 1), 8 = estimated without use of a model, 9 = missing data follows (see model description in SOLMET: Volume 2).
e. "9"s may represent zeros or missing data or the quantity nine depending on the positions in which they occur. Except for tape positions 001–023 in fields 002–101, elements with a tape configuration of 9s indicate missing or unknown data.

Copyrighted material licensed to Sei Ito on 2020-06-26 for licensee's use only.
All rights reserved. No further reproduction or distribution is permitted. Distributed by Techstreet for ASHRAE, www.techstreet.com

Table A1-15 Typical Meteorological Year Data Format *(Continued)*

TAPE DECK
9734

Tape Field Number [a]	Tape Positions [a]	Element	Tape Configuration	Code Definitions and Remarks
205 (contd.)	091	Occurrence of sleet (ice pellets), sleet showers, or hail	0–8	0 = None 1 = Light sleet or sleet showers (ice pellets) 2 = Moderate sleet or sleet showers (ice pellets) 3 = Heavy sleet or sleet showers (ice pellets) 4 = Light hail 5 = Moderate hail 6 = Heavy hail 7 = Light small hail 8 = Moderate or heavy small hail Prior to April 1970, ice pellets were coded as sleet. Beginning April 1970, sleet and small hail were redefined as ice pellets and are coded as a 1, 2, or 3 in this position. Beginning September 1956, intensities of hail were no longer reported and all occurrences were recorded as a 5.
	092	Occurrence of fog, blowing dust, or blowing sand	0–5	0 = None 1 = Fog 2 = Ice fog 3 = Ground fog 4 = Blowing dust 5 = Blowing sand These values recorded only when visibility less than 7 mi.
	093	Occurrence of smoke, haze, dust, blowing snow, or blowing spray	0–6	0 = None 1 = Smoke 2 = Haze 3 = Smoke and haze 4 = Dust 5 = Blowing snow 6 = Blowing spray These values recorded only when visibility less than 7 mi.

a. Tape positions are the precise column locations of data. Tape field numbers are ranges representing topical groups of tape positions.
b. This remark applies to the DRYCOLD.TMY weather data provided with this test procedure.
c. DRYCOLD.TMY is not defined as a "rehabilitated" station.
d. Note for Fields 102–110: Data code indicators are as follows:
0 = observed data, 1 = estimated from model using sunshine and cloud data, 2 = estimated from model using cloud data, 3 = estimated from model using sunshine data, 4 = estimated from model using sky condition data, 5 = estimated from linear interpolation, 6 = reserved for future use, 7 = estimated from other model (see individual station notes in SOLMET: Volume 1), 8 = estimated without use of a model, 9 = missing data follows (see model description in SOLMET: Volume 2).
e. "9"s may represent zeros or missing data or the quantity nine depending on the positions in which they occur. Except for tape positions 001–023 in fields 002–101, elements with a tape configuration of 9s indicate missing or unknown data.

Copyrighted material licensed to Sei Ito on 2020-06-26 for licensee's use only.
All rights reserved. No further reproduction or distribution is permitted. Distributed by Techstreet for ASHRAE, www.techstreet.com

Table A1-15 Typical Meteorological Year Data Format *(Continued)*

TAPE DECK
9734

Tape Field Number [a]	Tape Positions [a]	Element	Tape Configuration	Code Definitions and Remarks
206	094–103 094–098 099–103	Pressure Sea level pressure Station pressure	 08000–10999 08000–10999	 Pressure, reduced to sea level, in kilopascals (kPa) and hundredths. Pressure at station level in kilopascals (kPa) and hundredths. 08000–10999 = 80 to 109.99 kPa
207	104–111 104–107 108–111	Temperature Dry-bulb Dew-point	 –700 to 0600 –700 to 0600	 °C and tenths –700 to 0600 = –70.0°C to +60.0°C
208	112–118 112–114 115–118	Wind Wind direction Wind speed	 000–360 0000–1500	 Degrees m/s and tenths; 0000 with 000 direction indicates calm. 000 to 1500 = 0 to 150.0 m/s
209	119–122 119–120 121–122	Clouds Total sky cover Total opaque sky cover	 00–10 00–10	 Amount of celestial dome in tenths covered by clouds or obscuring phenomena. Opaque means clouds or obscuration through which the sky or higher cloud layers cannot be seen.
210	123	Snow cover Indicator	0–1	0 indicates no snow or trace of snow. 1 indicates more than a trace of snow on the ground.
211	124–132	Blank		

a. Tape positions are the precise column locations of data. Tape field numbers are ranges representing topical groups of tape positions.
b. This remark applies to the DRYCOLD.TMY weather data provided with this test procedure.
c. DRYCOLD.TMY is not defined as a "rehabilitated" station.
d. Note for Fields 102–110: Data code indicators are as follows:
0 = observed data, 1 = estimated from model using sunshine and cloud data, 2 = estimated from model using cloud data, 3 = estimated from model using sunshine data, 4 = estimated from model using sky condition data, 5 = estimated from linear interpolation, 6 = reserved for future use, 7 = estimated from other model (see individual station notes in SOLMET: Volume 1), 8 = estimated without use of a model, 9 = missing data follows (see model description in SOLMET: Volume 2).
e. "9"s may represent zeros or missing data or the quantity nine depending on the positions in which they occur. Except for tape positions 001–023 in fields 002–101, elements with a tape configuration of 9s indicate missing or unknown data.

Copyrighted material licensed to Sei Ito on 2020-06-26 for licensee's use only.
All rights reserved. No further reproduction or distribution is permitted. Distributed by Techstreet for ASHRAE, www.techstreet.com

Table A1-16 Header Elements in the TMY2 Format (for First Record of Each File)

Field Position	Element	Definition
002–006	WBAN number	Station's Weather Bureau Army Navy number (***Informative Note:*** See Table 2-1 of Marion and Urban [1995]) [B-37]
008–029	City	City where the station is located (maximum of 22 characters)
031–032	State	State where the station is located (abbreviated to two letters)
034–036	Time zone	Time zone is the number of hours by which the Local Standard Time is ahead of or behind Universal Time. For example, Mountain Standard Time is designated –7 because it is 7 hours behind Universal Time.
038–044 038 040–041 043–044	Latitude	Latitude of the station N = north of equator Degrees Minutes
046–053 046 048–050 052–053	Longitude	Longitude of the station W = west, E = east Degrees Minutes
056–059	Elevation	Elevation of station in metres above sea level

FORTRAN Sample Format:

```
(1X,A5,1X,A22,1X,A2,1X,I3,1X,A1,1X,I2,1X,I2,1X,A1,1X,I3,1X,I2,2X,I4)
```

C Sample Format:

```
(%s %s %s %d %s %d %d %s %d %d %d)
```


Copyrighted material licensed to Sei Ito on 2020-06-26 for licensee's use only.
All rights reserved. No further reproduction or distribution is permitted. Distributed by Techstreet for ASHRAE, www.techstreet.com

```
14944 SIOUX_FALLS            SD  -6 N 43 34 W  96 44   435
85010101000000000000?00000?00000?00000?00000?00000?00000?010A710A7-150A7-211A7060A70975A7360A7052A70161A700945A70999099999004E7050F8000A700E7
85010102000000000000?00000?00000?00000?00000?00000?00000?010A710A7-144A7-206A7060A70975A7350A7077A70161A700914A70999099999004E7050F8000A700E7
85010103000000000000?00000?00000?00000?00000?00000?00000?010A710A7-144A7-200A7063A70975A7340A7062A70161A700732A70999099999004E7050F8000A700E7
85010104000000000000?00000?00000?00000?00000?00000?00000?010A710A7-150A7-206A7063A70976A7330A7072A70161A700640A70999099999004E7050F8000A700E7
85010105000000000000?00000?00000?00000?00000?00000?00000?010A710A7-156A7-217A7060A70976A7330A7067A70161A700640A70999099999003E7050F8000A700E7
85010106000000000000?00000?00000?00000?00000?00000?00000?010A710A7-167A7-222A7062A70976A7340A7067A70161A700640A70999099999003E7050F8000A700E7
85010107000000000000?00000?00000?00000?00000?00000?00000?004A704A7-183A7-233A7065A70977A7300A7052A70193A777777A70999999999003E7050F8000A700E7
85010108000000000000?00000?00000?00000?00000?00000?00000?002A702A7-194A7-244A7065A70978A7310A7036A70193A777777A70999999999003E7050F8000A700E7
85010109010212970037G50173G40024G50038I50071I40033I50043I604A700A7-200A7-256A7062A70978A7330A7046A70193A777777A70999999999003E7050F8000A700E7
85010110028714150157G50560G40043G50159I50444I40069I50079I600A700A7-189A7-256A7056A70979A7310A7067A70193A777777A70999999999003E7050F8000A700E7
85010111043614150276G40714G40056G50286I40642I40088I50111I500A700A7-172A7-250A7051A70979A7310A7062A70161A777777A70999999999003E7050F8000A700E7
85010112053014150357G40782G40064G50374I40735I40098I50131I500A700A7-167A7-244A7051A70978A7300A7062A70161A777777A70999999999003E7050F8000A700E7
85010113056214150387G40806G40067G50407I40767I40101I50139I500A700A7-156A7-244A7047A70978A7320A7067A70193A777777A70999999999003E7050F8000A700E7
85010114053014150359G40788G40064G50377I40742I40098I50131I500A700A7-144A7-239A7045A70978A7310A7062A70193A777777A70999999999003E7050F8000A700E7
85010115043614150277G40716G40056G50289I40645I40088I50111I500A700A7-139A7-239A7043A70978A7330A7052A70193A777777A70999999999003E7050F8000A700E7
85010116028614150157G50564G40043G50162I50450I40069I50080I600A700A7-139A7-233A7045A70978A7300A7052A70161A777777A70999999999003E7050F8000A700E7
85010117010412730038G50209G40021G50038I50104I40030I50038I600A700A7-150A7-233A7049A70978A7290A7041A70241A777777A70999999999003E7050F8000A700E7
85010118000000000000?00000?00000?00000?00000?00000?00000?000A700A7-167A7-233A7057A70978A7000A7000A70241A777777A70999999999003E7050F8000A700E7
85010119000000000000?00000?00000?00000?00000?00000?00000?000A700A7-172A7-233A7059A70978A7000A7000A70241A777777A70999999999003E7050F8000A700E7
85010120000000000000?00000?00000?00000?00000?00000?00000?000A700A7-178A7-233A7062A70978A7000A7000A70241A777777A70999999999003E7050F8000A700E7
85010121000000000000?00000?00000?00000?00000?00000?00000?000A700A7-183A7-239A7062A70978A7260A7015A70241A777777A70999999999003E7050F8000A700E7
85010122000000000000?00000?00000?00000?00000?00000?00000?000A700A7-183A7-239A7062A70977A7220A7021A70241A777777A70999999999003E7050F8000A700E7
85010123000000000000?00000?00000?00000?00000?00000?00000?000A700A7-178A7-239A7059A70977A7220A7015A70241A777777A70999999999003E7050F8000A700E7
85010124000000000000?00000?00000?00000?00000?00000?00000?000A700A7-178A7-239A7059A70977A7240A7010A70241A777777A70999999999003E7050F8000A700E7

                                                                                                                1         1         1         1         1
          1         2         3         4         5         6         7         8         9         0         1         2         3         4
12345678901234567890123456789012345678901234567890123456789012345678901234567890123456789012345678901234567890123456789012345678901234567890123
                                                    (for field position identification only)
```

Figure A1-1 Sample file header and data in the TMY2 format for January 1.

Copyrighted material licensed to Sei Ito on 2020-06-26 for licensee's use only.
All rights reserved. No further reproduction or distribution is permitted. Distributed by Techstreet for ASHRAE, www.techstreet.com

Table A1-17 Data Elements in the TMY2 Format (for All Except the First Record)

Field Position	Element	Values	Definition
002–009	Local Standard Time		
002–003	Year	61–90	Year, 1961–1990
004–005	Month	1–12	Month
006–007	Day	1–31	Day of month
008–009	Hour	1–24	Hour of day in Local Standard Time
010–013	Extraterrestrial horizontal radiation	0–1415	Amount of solar radiation in Wh/m^2 received on a horizontal surface at the top of the atmosphere during the 60 minutes preceding the hour indicated.
014–017	Extraterrestrial direct normal radiation	0–1415	Amount of solar radiation in Wh/m^2 received on a surface normal to the sun at the top of the atmosphere during the 60 minutes preceding the hour indicated.
018–023	Global horizontal radiation		Total amount of direct and diffuse solar radiation in Wh/m^2 received on a horizontal surface during the 60 minutes preceding the hour indicated.
018–021	Data value	0–1200	
022	Flag for data source	A–H, ?	
023	Flag for data uncertainty	0–9	
024–029	Direct normal radiation		Amount of solar radiation in Wh/m^2 received within a 5.7 degree field of view centered on the sun, during the 60 minutes preceding the hour indicated.
024–027	Data value	0–1100	
028	Flag for data source	A–H, ?	
029	Flag for data uncertainty	0–9	
030–035	Diffuse horizontal radiation		Amount of solar radiation in Wh/m^2 received from the sky (excluding the solar disk) on a horizontal surface during the 60 minutes preceding the hour indicated.
030–033	Data value	0–700	
034	Flag for data source	A–H, ?	
035	Flag for data uncertainty	0–9	
036–041	Global horizontal illuminance		Average total amount of direct and diffuse illuminance in hundreds of lux received on a horizontal surface during the 60 minutes preceding the hour indicated. 0 to 1300 = 0 to 130,000 lux
036–039	Data value	0–1300	
040	Flag for data source	I, ?	
041	Flag for data uncertainty	0–9	
042–047	Direct normal illuminance		Average amount of direct normal illuminance in hundreds of lux received within a 5.7 degree field of view centered on the sun during the 60 minutes preceding the hour indicated. 0 to 1100 = 0 to 110,000 lux
042–045	Data value	0–1100	
046	Flag for data source	I, ?	
047	Flag for data uncertainty	0–9	
048–053	Diffuse horizontal illuminance		Average amount of illuminance in hundreds of lux received from the sky (excluding the solar disk) on a horizontal surface during the 60 minutes preceding the hour indicated. 0 to 800 = 0 to 80,000 lux
048–051	Data value	0–800	
052	Flag for data source	I, ?	
053	Flag for data uncertainty	0–9	
054–059	Zenith luminance		Average amount of luminance at the sky's zenith in tens of Cd/m^2 during the 60 minutes preceding the hour indicated. 0 to 7000 = 0 to 70,000 Cd/m^2
054–057	Data value	0–7000	
058	Flag for data source	I, ?	
059	Flag for data uncertainty	0–9	
060–063	Total sky cover		Amount of sky dome in tenths covered by clouds or obscuring phenomena at the hour indicated.
060–061	Data value	0–10	
062	Flag for data source	A–F, ?	
063	Flag for data uncertainty	0–9	
064–067	Opaque sky cover		Amount of sky dome in tenths covered by clouds or obscuring phenomena that prevent observing the sky or higher cloud layers at the hour indicated.
064–065	Data value	0–10	
066	Flag for data source	A–F	
067	Flag for data uncertainty	0–9	
068–073	Dry-bulb temperature		Dry-bulb temperature in tenths of °C at the hour indicated. –500 to 500 = –50.0°C to 50.0°C
068–071	Data value	–500 to 500	
072	Flag for data source	A–F	
073	Flag for data uncertainty	0–9	
074–079	Dew-point temperature		Dew-point temperature in tenths of °C at the hour indicated. –600 to 300 = –60.0°C to 30.0°C
074–077	Data value	–600 to 300	
078	Flag for data source	A–F	
079	Flag for data uncertainty	0–9	

Copyrighted material licensed to Sei Ito on 2020-06-26 for licensee's use only. All rights reserved. No further reproduction or distribution is permitted. Distributed by Techstreet for ASHRAE, www.techstreet.com

Table A1-17 Data Elements in the TMY2 Format (for All Except the First Record) ***(Continued)***

Field Position	Element	Values	Definition
080–084	Relative humidity		Relative humidity in percent at the hour indicated.
080–082	Data value	0–100	
083	Flag for data source	A–F	
084	Flag for data uncertainty	0–9	
085–090	Atmospheric pressure		Atmospheric pressure at station in millibars at the hour indicated.
085–088	Data value	700–1100	
089	Flag for data source	A–F	
090	Flag for data uncertainty	0–9	
091–095	Wind direction		Wind direction in degrees at the hour indicated. (N = 0 or 360, E = 90, S = 180, W = 270). For calm winds, wind direction equals zero.
091–093	Data value	0–360	
094	Flag for data source	A–F	
095	Flag for data uncertainty	0–9	
096–100	Wind speed		Wind speed in tenths of metres per second at the hour indicated. 0 to 400 = 0 to 40.0 m/s
096–98	Data value	0–400	
99	Flag for data source	A–F	
100	Flag for data uncertainty	0–9	
101–106	Visibility		Horizontal visibility in tenths of kilometres at the hour indicated. 7777 = unlimited visibility 0 to 1609 = 0.0 to 160.9 km 9999 = missing data
101–104	Data value	0–1609	
105	Flag for data source	A–F, ?	
106	Flag for data uncertainty	0–9	
107–113	Ceiling height		Ceiling height in metres at the hour indicated. 77777 = unlimited ceiling height 88888 = cirroform 99999 = missing data
107–111	Data value	0–30450	
112	Flag for data source	A–F, ?	
113	Flag for data uncertainty	0–9	
114–123	Present weather	***Informative Note:*** See Appendix B of Marion and Urban [B-37]	Present weather conditions denoted by a ten-digit number. ***Informative Note:*** See Appendix B of Marion and Urban [B-37] for key to present weather elements.
124–128	Precipitable water		Precipitable water in millimetres at the hour indicated.
124–126	Data value	0–100	
127	Flag for data source	A–F	
128	Flag for data uncertainty	0–9	
129–133	Aerosol optical depth		Broadband aerosol optical depth (broadband turbidity) in thousandths on the day indicated. 0 to 240 = 0.0 to 0.240
129–131	Data value	0–240	
132	Flag for data source	A–F	
133	Flag for data uncertainty	0–9	
134–138	Snow depth		Snow depth in centimetres on the day indicated. 999 = missing data
134–136	Data value	0–150	
137	Flag for data source	A–F, ?	
138	Flag for data uncertainty	0–9	
139–142	Days since last snowfall		Number of days since last snowfall. 88 = 88 or greater days 99 = missing data
139–140	Data value	0–88	
141	Flag for data source	A–F, ?	
142	Flag for data uncertainty	0–9	

FORTRAN Sample Format:

```
(1X,4I2,2I4,7(I4,A1,I1),2(I2,A1,I1),2(I4,A1,I1),1(I3,A1,I1),
1(I4,A1,I1),2(I3,A1,I1),1(I4,A1,I1),1(I5,A1,I1),10I1,3(I3,A1,I1),
1(I2,A1,I1))
```

C Sample Format:

```
(%2d%2d%2d%2d%4d%4d%4d%1s%1d%4d%1s%1d%4d%1s%1d%4d%1s%1d%4d%1s%1d%4d%1s
 %1d%4d%1s%1d%2d%1s%1d%2d%1s%1d%4d%1s%1d%4d%1s%1d%3d%1s%1d%4d%1s%1d%3d
 %1s%1d%3d%1s%1d%4d%1s%1d%5ld%1s%1d%1d%1d%1d%1d%1d%1d%1d%1d%1d%1d%3d%1s
 %1d%3d%1s%1d%3d%1s%1d%2d%1s%1d)
```

Note: For ceiling height data, integer variable should accept data values as large as 99999.

Copyrighted material licensed to Sei Ito on 2020-06-26 for licensee's use only. All rights reserved. No further reproduction or distribution is permitted. Distributed by Techstreet for ASHRAE, www.techstreet.com

Table A1-18 Data Elements in the WYEC2 Format

Field Number	Data Positions	Flag Position(s)	Data Element
001	001–005	—	WBAN station identification number
002	006–006	—	File source code
003	007–014	—	Year, month, day, hour (two characters each)
101	015–018	—	Extraterrestrial irradiance, kJ/m^2
102	019–022	023–024	Global horizontal irradiance, kJ/m^2
103	025–028	029–030	Direct normal irradiance, kJ/m^2
104	031–034	035–036	Diffuse horizontal irradiance, kJ/m^2
105	037–040	041	Global horizontal illuminance, 100 lux
106	042–045	046	Direct normal illuminance, 100 lux
107	047–050	051	Diffuse horizontal illuminance, 100 lux
108	052–055	056	Zenith luminance, 100 Cd/m^2
110	057–058	059	Minutes of sunshine, 0 to 60 minutes
201	060–063	064	Ceiling height, 10 m
202	065–068	069	Sky condition
203	070–073	074	Visibility, 100 m
204	075–082	083	Present weather
205	084–088	089	Station pressure, 10 Pa
206	090–093	094	Dry-bulb temperature, 0.1°C
207	095–098	099	Dew-point temperature, 0.1°C
208	100–102	103	Wind direction, 0 to 359 degrees
209	104–107	108	Wind speed, 0.1 m/s
210	109–110	111	Total sky cover, 0 to 10 in tenths
211	112–113	114	Opaque sky cover, 0 to 10 in tenths
212	115–115	116	Snow cover

Copyrighted material licensed to Sei Ito on 2020-06-26 for licensee's use only.
All rights reserved. No further reproduction or distribution is permitted. Distributed by Techstreet for ASHRAE, www.techstreet.com

(This is a normative annex and is part of this standard.)

NORMATIVE ANNEX A2
STANDARD OUTPUT REPORTS

The standard output reports, consisting of the following seven forms provided in the electronic media accompanying this standard, shall be used:

a. Output results for cases of Sections 5.2.1, 5.2.2, and 5.2.3 (Sec5-2Aout.XLS, spreadsheet file)
b. Output results for cases of Section 5.2.4 (Sec5-2Bout.XLS, spreadsheet file)
c. Output results for cases of Sections 5.3.1 and 5.3.2 (Sec5-3Aout.XLS, spreadsheet file)
d. Output results for cases of Sections 5.3.3 and 5.3.4 (Sec5-3Bout.XLS, spreadsheet file)
e. Output results for cases of Section 5.4 (Sec5-4out.XLS, spreadsheet file)
f. Output results for cases of Section 5.5 (Sec5-5out.XLSX, spreadsheet file)
g. Output results for cases of Section 7.2 (sheet "Sec7-2out" within RESULTS7-2.XLS spreadsheet file)
h. Modeling notes (S140outNotes.TXT, text file reprinted as Attachment A2.6)

For entering output results into the above XLS and XLSX template files, the user shall follow the instructions provided at the top of the appropriate electronic spreadsheet file or designated sheet within the spreadsheet file. These instructions are reprinted as Attachments A2.1, A2.2, A2.3, A2.4, A2.5, and A2.6, respectively, within this section; instructions for sheet "Sec7-2out" within RESULTS7-2.XLS are not reprinted here.

For entering modeling notes into S140outNotes.TXT, the report author shall create one modeling notes text document for each section of tests, for example, as follows:

a. S140outNotes_5-2A.TXT for the Class-I building thermal envelope and fabric load tests of Sections 5.2.1, 5.2.2, and 5.2.3
b. S140outNotes_5-2B.TXT for the Class-I ground-coupled slab-on-grade tests of Section 5.2.4
c. S140outNotes_5-3A.TXT for the Class-I space-cooling equipment performance analytical verification tests of Sections 5.3.1 and 5.3.2
d. S140outNotes_5-3B.TXT for the Class-I space-cooling equipment performance comparative tests of Sections 5.3.3 and 5.3.4
e. S140outNotes_5-4.TXT for the Class-I space-heating equipment performance tests of Section 5.4
f. S140outNotes_5-5.TXT for the Class-I air-side HVAC equipment performance analytical verification tests of Section 5.5
g. S140outNotes_7-2.TXT for the Class-II test procedures of Section 7.2

Informative Note: For entering modeling notes into S140outNotes.TXT, the format of the examples applying S140outNotes_Examples.TXT given in Informative Attachment A2.8 within this section is recommended.

Attachment A2.1—Instructions for Entering Results into Sec5-2Aout.XLS

STANDARD 140 OUTPUT FORM—RESULTS
Sec5-2Aout.XLS

INSTRUCTIONS:

1. Use specified units.
2. All radiation data are for sum of direct and diffuse solar radiation.
3. Format dates using the appropriate two-digit date followed by a three-digit month code and two-digit hour code (24-hour clock) as shown below:

MONTH	CODE
January	Jan
February	Feb
March	Mar
April	Apr
May	May
June	Jun
July	Jul
August	Aug
September	Sep
October	Oct
November	Nov
December	Dec

For example, a peak occurring on Jan 4 during the 15th hour interval (2 to 3 p.m.), shall be input as follows:

DATE	HOUR
04-Jan	15

4. Data entry is restricted to Column B or Columns B, C, D. Enter appropriate output in the proper columns for the case or hour listed in Column A. This worksheet extends down to Row 901. The protection option has been used in this worksheet to help ensure that data are input to the correct cells.

Attachment A2.2—Instructions for Entering Results into Sec5-2Bout.XLS

Sec5-2Bout.XLS OUTPUT SPREADSHEET FOR GROUND-COUPLED SLAB-ON-GRADE ANALYTICAL VERIFICATION, CASES GC10a-GC80c

INSTRUCTIONS:

1. Use specified units.
2. Data entry is restricted to the following ranges:

I5...I8; O5...O6; O8:	Tested Program Identifying Information
E58…H63; J58, K58:	Steady-State Case Outputs
E70…R70:	Harmonic Case "a"-Series Outputs

Copyrighted material licensed to Sei Ito on 2020-06-26 for licensee's use only. All rights reserved. No further reproduction or distribution is permitted. Distributed by Techstreet for ASHRAE, www.techstreet.com

E71…R76:	Harmonic Case "b"-Series Outputs
E77…R80:	Harmonic Case "c"-Series Outputs
G86…K103; G105…K122:	Steady-State Near-Surface Temperature Outputs
M86…M103; M105…M122:	GC10a At-Surface Temperature Outputs
G126:	Hourly Time Convention
E131…G8890:	Hourly Floor Conduction Outputs

3. Annual sums and means are values for the entire final year of the multiyear simulation. Similarly, annual means, maxima, and minima are values that occur for the final year of the entire multiyear simulation.
4. Output terminology is defined in the output section of the specification for each case where applicable.
5. Format dates using the appropriate two-digit date followed by a three-letter month code and two-digit hour code (24-hour clock) as shown below.

MONTH	CODE
JANUARY	Jan
FEBRUARY	Feb
MARCH	Mar
APRIL	Apr
MAY	May
JUNE	Jun
JULY	Jul
AUGUST	Aug
SEPTEMBER	Sep
OCTOBER	Oct
NOVEMBER	Nov
DECEMBER	Dec

For example, a maximum value occurring on August 16 during the 15th hour interval (2:00 P.M. to 3:00 P.M.) shall be input as follows:

Date	Hour
16-Aug	15

Attachment A2.3—Instructions for Entering Results into Sec5-3Aout.XLS

HVAC BESTEST CASES CE100 THROUGH CE200 OUTPUT FORM Sec5-3Aout.XLS

INSTRUCTIONS:

1. Use specified units.
2. Data entry is restricted to columns B through T and rows 25 through 38. The protection option has been employed to help ensure that data are input in the correct cells.
3. February totals are consumptions and loads just for the month of February. Similarly, February means and maxima are those values just for the month of February.
4. *Cooling energy consumption*, *evaporator coil load*, *zone load*, and *COP* are defined in Section 3.

Attachment A2.4 Instructions for Entering Results into Sec5-3Bout.XLS

Sec5-3Bout.XLS OUTPUT SPREADSHEET FOR HVAC BESTEST, CASES CE300 THROUGH CE545

INSTRUCTIONS:

1. Use specified units.
2. Data entry is restricted to the following ranges:

B62..L82:	Annual Sums, Annual Means, and Other
M62..N62:	Annual Means, CE300 Only
B89..L112:	June 28 Hourly Output, Case CE300
B120..L121:	Case CE500 Average Daily Outputs
B129..L130:	Case CE530 Average Daily Outputs
Q62..AB81:	Annual Hourly Integrated Maxima, Consumptions and Loads
AC62..AH62:	Annual Hourly Integrated Maxima, Case CE300—Weather Check
Q89..AN108:	Annual Hourly Integrated Maxima and Minima, COP2 and Zone

3. Annual totals are consumption and/or loads just for the entire annual simulation. Similarly, annual means, maxima, and minima are those values that occur for the entire annual simulation. "May–Sep" results are taken using May 1 through September 30 data extracted from a full annual simulation.
4. Output terminology is defined in the output section of the specification for each case, where applicable, or in Section 3.
5. Format dates using the appropriate two-digit date followed by a three-letter month code and two-digit hour code (24-hour clock) as shown below.

MONTH	CODE
JANUARY	Jan
FEBRUARY	Feb
MARCH	Mar
APRIL	Apr
MAY	May
JUNE	Jun
JULY	Jul
AUGUST	Aug
SEPTEMBER	Sep
OCTOBER	Oct
NOVEMBER	Nov
DECEMBER	Dec

For example, a maximum value occurring on August 16 during the 15th hour interval (2 to 3 P.M.) shall be input as follows:

DATE	HOUR
16-Aug	15

Copyrighted material licensed to Sei Ito on 2020-06-26 for licensee's use only. All rights reserved. No further reproduction or distribution is permitted. Distributed by Techstreet for ASHRAE, www.techstreet.com

Attachment A2.5—Instructions for Entering Results into Sec5-4out.XLS

INSTRUCTIONS:

1. Use specified units.
2. Enter data. Data entry is restricted to cells that require results. The protection option has been employed to ensure that data are input into the correct cells.

Attachment A2.6—Instructions for Entering Results into Sec5-5out.XLSX

Sec5-5out.XLSX. Output Spreadsheet for Standard 140 Air-side HVAC Equipment Performance Analytical Verification Cases AE101 through AE445

INSTRUCTIONS:

1. Use specified units.
2. Data entry is restricted to the following ranges:

C50…C52:	Software Name, Version, and Date of Results
C61…J63:	Coil Loads, Fan Coil Air System, AE100 Series Cases
S61…Y75:	Detailed Outputs, Fan Coil Air System, AE100 Series Cases
C89…J95:	Coil Loads, Single Zone Air System, AE200 Series Cases
S89…Z123:	Detailed Outputs, Single Zone Air System, AE200 Series Cases
C137…O143:	Coil Loads, Constant Volume Terminal Reheat Air System, AE300 Series Cases
S137…AC171:	Detailed Outputs, Constant Volume Terminal Reheat Air System, AE300 Series Cases
C185…O191:	Coil Loads, Variable Air Volume Air System, AE400 Series Cases
S185…AC219:	Detailed Outputs, Variable Air Volume Air System, AE400 Series Cases

3. Results are steady-state values for the last hour of the simulation.
4. Output terminology is defined in Section 6.5.

Attachment A2.7—Standard 140 Output Form—Modeling Notes (S140outNotes.TXT)

1. MODELING NOTES FOR ASHRAE STANDARD 140 INTRODUCTION

This document shall include supplemental information about the ASHRAE Standard 140 tests performed. One S140outNotes document shall be provided for each set of tests (e.g., one for the building thermal and fabric load tests of Sections 5.2.1, 5.2.2, and 5.2.3; one for the space-cooling equipment analytical verification tests of Sections 5.3.1 and 5.3.2; etc.) The types of information listed below shall be provided in this document, each in a separate section:

a. Software information
b. Alternative modeling methods
c. Equivalent modeling methods
d. Nonspecified inputs
e. Omitted test cases and results
f. Changes made to source code for the purpose of running the tests, where such changes are not available in publicly released versions of the software
g. Anomalous results

Notes in this document shall be limited to the topics shown above. Notes must be factual and objective and shall only refer to the software being tested. Notes shall not refer to any other software program.

Informative Note: Text at the start of each section describes the content of the section for the reader and provides instructions for supplying the content. Sample notes are provided in a separate document (S140outNotes_Examples.TXT).

A. SOFTWARE INFORMATION

CONTENT: This section shall include reference information for the software—the vendor, name, and version of the software, plus operating system and computer hardware requirements.

INSTRUCTIONS: Information for items 1 through 7 below shall be provided. Information for item 8 shall be permitted but is not required.

1. SOFTWARE VENDOR:
2. SOFTWARE NAME:
3. SOFTWARE VERSION
   (unique software version identifier):
4. OPERATING SYSTEM REQUIREMENTS:
5. APPROX HARD DISK SPACE REQUIRED FOR INSTALLATION:
6. MINIMUM RAM REQUIRED FOR SOFTWARE OPERATION:
7. MINIMUM DISPLAY MONITOR REQUIREMENTS:
8. OTHER HARDWARE OR SOFTWARE-RELATED REQUIREMENTS:

Informative Note: Item 8 can be used to supply additional relevant information.

B. REPORT BLOCK FOR ALTERNATIVE MODELING METHODS

CONTENT: If the software being tested provides alternative modeling methods or algorithms for performing the tests, this section shall describe modeling methods used for the tests.

INSTRUCTIONS: If alternative modeling methods are applicable, a separate note for each alternative modeling method or algorithm situation shall be provided. The standard format shown below and a separate number and title for each note shall be applied. If alternative modeling methods are not applicable, specify "NONE" in place of the information below.

NOTE 1—<Title>

1.1 Describe the Effect Being Simulated:

1.2 Optional Settings or Modeling Capabilities
(list setting or capability and its physical meaning):

Copyrighted material licensed to Sei Ito on 2020-06-26 for licensee's use only. All rights reserved. No further reproduction or distribution is permitted. Distributed by Techstreet for ASHRAE, www.techstreet.com

1.2.1 <name>
Physical Meaning: <explanation>

1.2.2 <name>
Physical Meaning: <explanation>

1.2.n <name>
Physical Meaning: <explanation>

1.3 Setting or Capability Used:

C. REPORT BLOCK FOR EQUIVALENT MODELING METHODS

CONTENT: This section shall describe equivalent modeling methods used to perform the tests. When the software does not model an effect exactly as stated in the standard or does not permit the input values required, equivalent modeling methods shall be permitted to perform the test.

INSTRUCTIONS: If equivalent modeling methods are applied, a separate note for each instance of equivalent modeling shall be provided. The standard format shown below and a separate number and title for each note shall be applied. If equivalent modeling methods are not applicable, specify "NONE" in place of the information below.

NOTE 1—<Title>

1.1 Describe the Effect Being Simulated:

1.2 Section(s) of the Standard where Relevant Inputs are Specified:

1.3 Equivalent Input(s) Used:

1.4 Physical, Mathematical, or Logical Justification of the Equivalent Input(s)—provide supporting calculations, if relevant:

D. REPORT BLOCK FOR USE OF NONSPECIFIED INPUTS

CONTENT: This section shall describe nonspecified inputs used to perform the tests. Use of nonspecified inputs shall be permitted only for the following specified sections relating to the following topics:

- Interior combined radiative and convective surface coefficients in Sections 5.2.1.10, 5.2.3.2.2, and 5.3.1.9
- Interior solar distribution in Sections 5.2.1.12, 5.2.2.1.2.2, 5.2.2.2.7.4, 5.2.3.9.3, 5.2.3.10.2, and 5.2.3.12.2
- Air density given at specific altitudes for the space-cooling and space-heating equipment cases in Sections 5.3.1.4.3, 5.3.3.4.3, and 5.4.1.4.3.

INSTRUCTIONS: If nonspecified inputs are applied, a separate note for each use of nonspecified inputs shall be provided. The standard format shown below and a separate number and title for each note shall be applied. If nonspecified inputs are not applied, specify "NONE" in place of the information below.

NOTE 1—<Title>

1.1 Describe the Effect Being Simulated:

1.2 Section(s) of the Standard where Relevant Inputs are Specified:

1.3 Nonspecified Input(s) Used:

1.4 Physical, Mathematical, or Logical Justification for Use of the Nonspecified Input(s)—provide supporting calculations if relevant:

E. REPORT BLOCK FOR OMITTED TEST CASES AND RESULTS

CONTENT: This section shall describe test cases that were omitted and/or individual results of test cases that were omitted along with the reason for the omission.

INSTRUCTIONS: If test cases were omitted, a separate note to describe each type of omission shall be provided. The standard format shown below and a separate number and title for each note shall be applied. If there are no omitted test cases, specify "NONE" in place of the information below.

NOTE 1—<Title>

1.1 List Case(s) where Results were Omitted, and which Results were Omitted for the Case(s):

1.2 Explanation for Omitting the Test Case(s) Results:

F. REPORT BLOCK FOR CHANGES TO SOURCE CODE FOR THE PURPOSE OF RUNNING THE TESTS, WHERE SUCH CHANGES ARE NOT AVAILABLE IN PUBLICLY RELEASED VERSIONS OF THE SOFTWARE

CONTENT: This section shall describe changes to software source code made to allow the software to run a test, where such changes are not available in a publicly released version of the software.

Informative Note: This section addresses special situations where a change to source code is necessary to activate a feature or to permit inputs needed for a test when these features are not available in the publicly released version of the software.

INSTRUCTIONS: If changes to source code for the purpose of running a test are applied, separate notes to describe each source code modification shall be provided. The standard format shown below and a separate number and title for each note shall be applied. If changes to source code are not applied, specify "NONE" in place of the information below.

NOTE 1—<Title>

1.1 List the Change(s) to the Source Code:

1.2 List the Test Case(s) Relevant to the Change(s) in the Source Code:

1.3. Explanation of Why the Change is Not Included in the Publicly Released Version of the Software:

G. REPORT BLOCK FOR ANOMALOUS RESULTS

CONTENT: Describing anomalous results shall be permitted but is not required. If anomalous test results are described, this section shall be used.

Copyrighted material licensed to Sei Ito on 2020-06-26 for licensee's use only.
All rights reserved. No further reproduction or distribution is permitted. Distributed by Techstreet for ASHRAE, www.techstreet.com

INSTRUCTIONS: If anomalous test results are described, each type of anomalous result shall be described in a separate note. The standard format shown below and a separate number and title for each note item shall be applied. If anomalous results are not discussed, it shall be permitted to specify "NONE" in place of the information below.

NOTE 1—<Title>

1.1 Test Case(s) and Specific Results from the Case(s) that are Anomalous:

1.2 Explanation of Reason for the Anomalous Results:

<END OF DOCUMENT>

INFORMATIVE ATTACHMENT A2.8—EXAMPLES OF MODELING NOTES (S140OUTNOTES_EXAMPLES.TXT)

Informative Note: **Attachment A2.8 is all informative material and is not part of the Standard.**

MODELING NOTES FOR ASHRAE STANDARD 140—EXAMPLES

See S140outNotes_Examples.TXT provided with the accompanying electronic media within the "Informative Materials" subfolder included within any of the "Sec…Files" subfolders.

Copyrighted material licensed to Sei Ito on 2020-06-26 for licensee's use only.
All rights reserved. No further reproduction or distribution is permitted. Distributed by Techstreet for ASHRAE, www.techstreet.com

(This annex is not part of the standard. It is merely informative and does not contain requirements necessary for conformance to the standard. It has not been processed according to the ANSI requirements for a standard and may contain material that has not been subject to public review or a consensus process. Unresolved objectors on informative material are not offered the right to appeal at ASHRAE or ANSI.)

INFORMATIVE ANNEX B1
TABULAR SUMMARY OF TEST CASES

Table B1-1 summarizes the content of the test-case tabular summary tables, including relevant sections of the standard for each suite of tests.

Nomenclature

Abbreviations and symbols used in Tables B1-2, B1-3, and B1-6 through B1-17 are listed below. Abbreviations used for Tables B1-4, B1-5, and B1-18 are listed with those tables.

1.0mH	horizontal overhang projecting 1 m perpendicular to window surface as in Figure 5-2 (Section 5.2.2.1.1.1)
1.0mHV	horizontal overhang and vertical fins projecting 1 m perpendicular to window surface as in Figures 5-4 and 5-5 (Section 5.2.2.1.3.1)
20,20	a single-temperature thermostat control strategy (heat ON below 20°C, cooling ON above 20°C)
20,27	a deadband thermostat control strategy (heat ON below 20°C, cooling ON above 27°C)
27,V	a thermostat and ventilation control strategy with cooling (ON above 27°C, daytime only) and nighttime-only ventilation; no heating anytime
Absorpt.	absorptance
ach	air changes per hour
Apr.	April
AHRI	Air-Conditioning, Heating and Refrigeration Institute
COP	coefficient of performance
DB	dry-bulb temperature
DBT	dry-bulb temperature
DP	dew-point temperature
E,W	east and west
EDB	entering dry-bulb temperature
Emit.	emittance
Ext.	exterior
FF	free-floating thermostat control strategy (no heating or cooling)
H	heavy mass
H,C,V	heating, cooling, ventilation
high	greater loads relative to "mid"
high2	greater loads relative to "mid2"
Infil.	infiltration (natural ventilation)
Int.	interior
Intgen.	internally generated sensible heat gains
IR	infrared radiation
L	light mass
mid	internal gains schedules are relatively high daytime and low nighttime periodically/seasonally adjusted values
mid2	similar to "mid" but with cooler-month internal gains = 0 for 0 cooling at ODB < 55°F for 0 OA
NA	not applicable
Num.	zone number (1 or 2)
OA	outdoor air
Oct.	October
ODB	outdoor dry-bulb temperature
Orient.	orientation
PLR	part-load ratio for cooling
PLR_f	part-load ratio for furnace
S	south
Shade	window shading device: horizontal overhang and/or vertical fins
SHR	sensible heat ratio
SS	sunspace
SW	shortwave (solar spectrum) radiation
Temp.	temperature
V	forced ventilation cooling

Table B1-1 Description of Test-Case Tabular Summary Tables

Tables	Description of Test Cases	Sections	Units
B1-2, B1-3	Class-I building thermal fabric envelope and fabric load, comparative	5.2.1, 5.2.2, 5.2.3	SI
B1-4, B1-5	Class-I ground-coupled slab-on-grade, analytical verification	5.2.4	SI
B1-6	Space-cooling equipment performance, analytical verification	5.3.1, 5.3.2	SI
B1-7	Space-cooling equipment performance, analytical verification	5.3.1, 5.3.2	I-P
B1-8	Space-cooling equipment performance, comparative	5.3.3, 5.3.4	SI
B1-9	Space-heating equipment, analytical verification and comparative	5.4	SI
B1-10, B1-12, B1-14, B1-16	Air-side HVAC equipment performance, analytical verification	5.5	I-P
B1-11, B1-13, B1-15, B1-17	Air-side HVAC equipment performance, analytical verification	5.5	SI
B1-18	Class-II building thermal fabric envelope and fabric load, comparative	7.2	I-P

Copyrighted material licensed to Sei Ito on 2020-06-26 for licensee's use only. All rights reserved. No further reproduction or distribution is permitted. Distributed by Techstreet for ASHRAE, www.techstreet.com

Table B1-2 Section 5.2.3 Case Descriptions, Low Mass In-Depth

Case #	Setpoints H, C, V, °C	Mass	Intgen., W	Infil., ach	Opaque Surface Int. IR Emit.	Opaque Surface Ext. IR Emit.	Opaque Surface Int. SW Absorpt.	Opaque Surface Ext. SW Absorpt.	Glass, m^2	Orient.	Shade	Comments
195	20, 20	L	0	0	0.1	0.1	NA see Note 1	0.1	See Note 2	S	No	Case 195 tests solid conduction.
200	20, 20	L	0	0	0.1	0.1	NA	0.1	0 (See Note 3)	S	No	Do Cases 200 through 215 only if you can explicitly adjust infrared emittance in your code. Cases 200, 195 test film convection algorithms. The major portion of the change in results between Cases 200 and 195 will be from the opaque window. Increased differences between codes will be from the different film algorithms.
210	20, 20	L	0	0	0.1	0.9	NA	0.1	0	S	No	Cases 220, 210 test Int. IR with Ext. IR ON. Cases 210, 200 test Ext. IR with Int. IR OFF.
215	20, 20	L	0	0	0.9	0.1	NA	0.1	0	S	No	Cases 220, 215 test Ext. IR with Int. IR ON. Cases 215, 200 test Int. IR with Ext. IR OFF.
220	20, 20	L	0	0	0.9	0.9	NA	0.1	0	S	No	Cases 220, 210 test Int. IR with Ext. IR ON. Case 220 is the base for Cases 230 through 270.
230	20, 20	L	0	1	0.9	0.9	NA	0.1	0	S	No	Cases 230, 220 test infiltration.
240	20, 20	L	200	0	0.9	0.9	NA	0.1	0	S	No	Cases 240, 220 test internal gains.
250	20, 20	L	0	0	0.9	0.9	NA	0.9	0	S	No	Cases 250, 220 test exterior solar absorptance/incident solar.
270	20, 20	L	0	0	0.9	0.9	0.9	0.1	12	S	No	Cases 270, 220 test south solar transmittance/incident solar.
280	20, 20	L	0	0	0.9	0.9	0.1	0.1	12	S	No	Cases 280, 270 test cavity albedo.
290	20, 20	L	0	0	0.9	0.9	0.9	0.1	12	S	1.0 mH	Cases 290, 270 test south horizontal overhang.
300	20, 20	L	0	0	0.9	0.9	0.9	0.1	6, 6	E, W	No	Cases 300, 270 test east and west solar transmittance and incidence.
310	20, 20	L	0	0	0.9	0.9	0.9	0.1	6, 6	E, W	1.0 m HV	Cases 310, 300 test east and west overhang and fins.
320	20, 27	L	0	0	0.9	0.9	0.9	0.1	12	S	No	Cases 320, 270 test thermostat deadband.

Note 1: Interior shortwave absorptance doesn't matter when glass area is zero.

Note 2: Case 195 has neither a window nor a high-conductance wall but consists of 100% normally insulated wall as specified for the lightweight case.

Note 3: Cases with zero glass area (except Cases 195 and 395) have a high-conductance wall in place of the window and with the same area as the window. The high-conductance wall has the same exterior and interior IR emittance and the same solar absorptance as specified for the normal wall in each case. The high-conductance wall surface texture is very smooth (like glass.)

Copyrighted material licensed to Sei Ito on 2020-06-26 for licensee's use only.
All rights reserved. No further reproduction or distribution is permitted. Distributed by Techstreet for ASHRAE, www.techstreet.com

Table B1-3 Sections 5.2.1, 5.2.2, and 5.2.3 Case Descriptions, Basic and In-Depth Cases

Case #	Setpoints H, C, V, °C	Mass	Intgen., W	Infil., ach	Opaque Surface Int. IR Emit.	Opaque Surface Ext. IR Emit.	Opaque Surface Int. SW Absorpt.	Opaque Surface Ext. SW Absorpt.	Glass, m^2	Orient.	Shade	Comments
395	20, 27	L	0	0	0.9	0.9	NA	0.1	See Note 1	S	No	Case 395 tests solid conduction.
400	20, 27	L	0	0	0.9	0.9	NA	0.1	0	S	No	Cases 400, 395 test surface convection and IR. (See Note 2.)
410	20, 27	L	0	0.5	0.9	0.9	NA	0.1	0	S	No	Cases 410, 400 test infiltration.
420	20, 27	L	200	0.5	0.9	0.9	NA	0.1	0	S	No	Cases 420, 410 test internal heat generation.
430	20, 27	L	200	0.5	0.9	0.9	NA	0.6	0	S	No	Cases 430, 420 test exterior solar absorptance and incident solar.
440	20, 27	L	200	0.5	0.9	0.9	0.1	0.6	12	S	No	Cases 440, 600 test interior solar absorptance and cavity albedo.
600	20, 27	L	200	0.5	0.9	0.9	0.6	0.6	12	S	No	Cases 600, 430 test south solar transmission.
610	20, 27	L	200	0.5	0.9	0.9	0.6	0.6	12	S	1.0 mH	Cases 610, 600 test south overhang.
620	20, 27	L	200	0.5	0.9	0.9	0.6	0.6	6, 6	E, W	No	Cases 620, 600 test east and west solar transmittance/incidence.
630	20, 27	L	200	0.5	0.9	0.9	0.6	0.6	6, 6	E, W	1.0 m HV	Cases 630, 620 test east and west overhangs and fins.
640	SETBACK	L	200	0.5	0.9	0.9	0.6	0.6	12	S	No	Cases 640, 600 test night setback.
650	27, V	L	200	0.5	0.9	0.9	0.6	0.6	12	S	No	Cases 650, 600 test venting.
800	20, 27	H	200	0.5	0.9	0.9	NA	0.6	0	S	No	Cases 800, 430 test thermal mass with no transmitted solar.
810	20, 27	H	200	0.5	0.9	0.9	0.1	0.6	12	S	No	Cases 810, 900 test interior solar absorptance and mass interaction.
900	20, 27	H	200	0.5	0.9	0.9	0.6	0.6	12	S	No	Cases 900, 600 test thermal mass and solar interaction.
910	20, 27	H	200	0.5	0.9	0.9	0.6	0.6	12	S	1.0 mH	Cases 910, 900 test south overhang/mass interaction.
920	20, 27	H	200	0.5	0.9	0.9	0.6	0.6	6, 6	E, W	No	Cases 920, 900 test east and west transmittance/mass interaction.
930	20, 27	H	200	0.5	0.9	0.9	0.6	0.6	6, 6	E, W	1.0 m HV	Cases 930, 920 test east and west shading/mass interaction.
940	SETBACK	H	200	0.5	0.9	0.9	0.6	0.6	12	S	No	Cases 940, 900 test setback/mass interaction.
950	27, V	H	200	0.5	0.9	0.9	0.6	0.6	12	S	No	Cases 950, 900 test venting/mass interaction.
960	2ZONE, SS	See specification in Test Procedures.										960 tests passive solar/interzonal heat transfer.
600FF	NONE	These cases, labeled FF (interior temperatures free float), are exactly the same as the corresponding non-FF cases, except there are no mechanical heating or cooling systems.										
900FF	NONE											
650FF	NONE, V											
950FF	NONE, V											

Note 1: Case 395 has neither a window nor an opaque window. It consists of 100% normally insulated wall as specified for the lightweight case.

Note 2: Cases 400, 395 test surface convection and IR radiation. The major portion of the change in results will be from the opaque window. Increased differences between codes will be from the different film convection and IR algorithms.

Copyrighted material licensed to Sei Ito on 2020-06-26 for licensee's use only.
All rights reserved. No further reproduction or distribution is permitted. Distributed by Techstreet for ASHRAE, www.techstreet.com

Table B1-4 Ground-Coupled Slab-on-Grade Analytical Verification "a"-Series and "b"-Series Cases

Case	Description/Test	Dynamic	Slab Dimen. (m x m)	h,int (W/m^2K)	h,ext (W/m^2K)	Ground Depth (m)	Far-Field Bound[b] (m)	Cond. (W/mK)	Comments
Analytical Verification Tests									
GC10a	Analytical Base Case Original Delsante et al. (1983) Rectangular floor slab, steady-state, 3-d conduction	steady state	12 x 12	const T[a]	const T[a]	infinite	infinite	1.9	Analytical verification of detailed numerical-methods models, including set up of node meshing and boundary conditions. *Boundary Conditions:* constant temperature floor (Ti) and exterior ground (To) surfaces; linear dT across slab perimeter surface boundary *Other Inputs:* 24 cm perimeter boundary width, To = 10°C, Ti = 30°C, suppress all other modes of heat transfer.
Comparative Tests									
GC30a	Comparative Base Case for "a"-series	steady state	12 x 12	const T[a]	const T[a]	30	20	1.9	*Boundary Conditions:* slab perimeter surface is adiabatic GC30a-GC10a tests adiabatic versus linear dT slab perimeter surface b.c.
GC30b	Comparative Base Case for "b"-series	steady state	12 x 12	100	100	15	15	1.9	Most robust version of GC30a possible for EnergyPlus and SUNREL-GC *Inputs:* To,a = 10°C, Ti,a = 30°C. GC30b-GC30a tests h = 100 versus direct T[c]
GC40a	Harmonic Variation	harmonic	12 x 12	direct T[a]	direct T[a]	30	20	1.9	Annual "harmonic" variation of To or To,a: mean=10°C, low=2°C, high=18 °C GC40 tests phase shift of varying q versus varying To
GC40b	Harmonic Variation	harmonic	12 x 12	100	100	15	15	1.9	GC40-GC30 tests annual mean q for varying versus steady To
GC45b	Aspect Ratio (AR)	harmonic	36 x 4	100	100	15	15	1.9	GC45b-GC40b tests aspect ratio, high perimeter heat transfer fraction
GC50b	Large Slab	harmonic	80 x 80	100	100	15	15	1.9	GC50b-GC40b tests large slab, high core heat transfer fraction
GC55b	Shallow Deep Ground Temp.	harmonic	12 x 12	100	100	2	15	1.9	GC55b-GC40b tests shallow deep ground temperature, high core heat transfer fraction
GC60b	h,int	steady state	12 x 12	7.95	100	15	15	1.9	GC60b-GC30b tests h,int and resulting floor surface Temp. distribution
GC65b	h,int and h,ext	steady state	12 x 12	7.95	11.95	15	15	1.9	GC65b-GC60b tests h,ext and resulting ground surface Temp. distribution GC65b-GC30b tests combined effects of h,int and h,ext
GC70b	Harmonic h,int and h,ext	harmonic	12 x 12	7.95	11.95	15	15	1.9	GC70b-GC40b tests combined effects of h,int and h,ext in dynamic context GC70b-GC65b tests annual mean q for varying versus steady To
GC80b	Ground Conductivity	harmonic	12 x 12	100	100	15	15	0.5	GC80b-GC40b tests ground conductivity

Abbreviations:

"b.c." = boundary condition
"Cond." = slab & soil conductivity
"const T" = direct input constant temperature
"Dimen." = dimension
"direct T" = direct input temperature (varies hourly)
"dT" = temperature variation
"h,ext" = exterior surface convective coefficient
"h,int" = interior surface convective coefficient
"q" = heat flow through floor slab
"Temp." = temperature
"Ti" = slab interior surface temperature
"Ti,a" = zone air temperature
"To" = exterior ground surface temperature
"To,a" = outdoor dry-bulb temperature

Notes:
[a] For models that require air temperature inputs (i.e., that do not allow direct input of surface temperatures), convective surface coefficients are effectively infinite.
[b] Distance from slab edge.
[c] GC30c-GC30a also includes minor difference in amount of soil modeled.

Copyrighted material licensed to Sei Ito on 2020-06-26 for licensee's use only.
All rights reserved. No further reproduction or distribution is permitted. Distributed by Techstreet for ASHRAE, www.techstreet.com

Table B1-5 Ground-Coupled Slab-on-Grade Analytical Verification "c"-Series Cases

Case	Description/Test	Dynamic	Slab Dimen. (m x m)	h,int (W/m^2K)	h,ext (W/m^2K)	Ground Depth (m)	Far-Field Bound[b] (m)	Cond. (W/mK)	Comments
GC30c	Comparative Base Case for "c"-series	steady state	12 x 12	7.95	const T[a]	15	8	1.9	Most robust version of GC30 that can be done by BASESIMP *Inputs:* To = 10°C, Ti,a = 30°C. GC30c-GC30a tests reduced h,int = 7.95 $W/(m^2K)$ versus direct T[c]
GC40c	Harmonic Variation	harmonic	12 x 12	7.95	direct T[a]	15	8	1.9	GC40c tests phase shift of varying q versus varying To GC40c-GC30c tests annual mean q for varying versus steady To
GC45c	Aspect Ratio (AR)	harmonic	36 x 4	7.95	direct T[a]	15	8	1.9	GC45c-GC40c tests aspect ratio, high perimeter heat transfer fraction
GC55c	Shallow Deep Ground Temp.	harmonic	12 x 12	7.95	direct T[a]	5	8	1.9	GC55c-GC40c tests shallow deep ground temperature, high core heat transfer fraction
GC80c	Ground Conductivity	harmonic	12 x 12	7.95	direct T[a]	15	8	0.85	GC80c-GC40c tests ground conductivity

Abbreviations:

"Cond." = slab and soil conductivity
"const T" = direct input constant temperature
"Dimen." = dimension
"direct T" = direct input temperature (varies hourly)
"h,ext" = exterior surface convective coefficient
"h,int" = interior surface convective coefficient
"q" = heat flow through floor slab
"Temp." = temperature
"Ti,a" = zone air temperature
"To" = exterior ground surface temperature

Notes:
[a] For models that require air temperature inputs (which do not allow direct input of surface temperatures), convective surface coefficients are effectively infinite.
[b] Distance from slab edge.
[c] GC30c-GC30a also includes minor difference in amount of soil modeled.

Copyrighted material licensed to Sei Ito on 2020-06-26 for licensee's use only.
All rights reserved. No further reproduction or distribution is permitted. Distributed by Techstreet for ASHRAE, www.techstreet.com

Table B1-6 Space-Cooling Equipment BESTEST Analytical Verification Test Case Descriptions for Sections 5.3.1 and 5.3.2 (SI Units)

	Zone			Weather	
	Internal Gains*		Setpoint		
Case #	Sensible (W)	Latent (W)	EDB (°C)	ODB (°C)	Comments
dry zone series					
CE100	5400	0	22.2	46.1	Base case, dry coil. High PLR.
CE110	5400	0	22.2	29.4	High PLR. Tests low ODB versus CE100.
CE120	5400	0	26.7	29.4	High PLR. Tests high EDB versus CE110. Tests ODB & EDB interaction versus CE100.
CE130	270	0	22.2	46.1	Low PLR test versus CE100.
CE140	270	0	22.2	29.4	Tests ODB at low PLR vs CE130. Tests PLR at low ODB vs CE110.
humid zone series					
CE150	5400	1100	22.2	29.4	High PLR. High SHR. Tests latent load versus CE110.
CE160	5400	1100	26.7	29.4	High PLR. High SHR. Tests EDB versus CE150.
CE165	5400	1100	23.3	40.6	High PLR. High SHR. Tests ODB & EDB interaction with latent load versus CE160.
CE170	2100	1100	22.2	29.4	Mid PLR. Mid SHR. Tests low sensible load versus CE150.
CE180	2100	4400	22.2	29.4	High PLR. Low SHR. Tests SHR versus CE150. Tests high latent load versus CE170.
CE185	2100	4400	22.2	46.1	High PLR. Low SHR. Tests ODB versus CE180.
CE190	270	550	22.2	29.4	Low PLR. Low SHR Tests low PLR at constant SHR vs CE180. Tests latent load at low PLR versus CE140.
CE195	270	550	22.2	46.1	Low PLR. Low SHR Tests ODB at low PLR & SHR versus CE190. Tests low PLR at constant SHR vs CE185. Tests latent load at low PLR versus CE130.
full load test at ARI conditions					
CE200	6120	1817	26.7	35.0	Tests for ARI indoor wetbulb temperature at full sensible and latent loads.

Abbreviations: PLR = Part Load Ratio; ODB = outdoor drybulb temperature;
EDB = entering drybulb temperature; vs = versus;
SHR = Sensible Heat Ratio; ARI = Air Conditioning and Refrigeration Institute.

*Internal Gains are internally generated sources of heat and humidity that are not related to operation of the mechanical cooling system or its air distribution fan.

Copyrighted material licensed to Sei Ito on 2020-06-26 for licensee's use only.
All rights reserved. No further reproduction or distribution is permitted. Distributed by Techstreet for ASHRAE, www.techstreet.com

Table B1-7 Space-Cooling Equipment BESTEST Analytical Verification Test Case Descriptions for Sections 5.3.1 and 5.3.2 (I-P Units)

	Zone			Weather	
	Internal Gains*		Setpoint		
Case #	Sensible (Btu/h)	Latent (Btu/h)	EDB (°F)	ODB (°F)	Comments
dry zone series					
CE100	18430	0	72.0	115.0	Base case, dry coil. High PLR.
CE110	18430	0	72.0	85.0	High PLR. Tests low ODB versus CE100.
CE120	18430	0	80.0	85.0	High PLR. Tests high EDB versus CE110. Tests ODB & EDB interaction versus CE100.
CE130	922	0	72.0	115.0	Low PLR test versus CE100.
CE140	922	0	72.0	85.0	Tests ODB at low PLR vs CE130. Tests PLR at low ODB vs CE110.
humid zone series					
CE150	18430	3754	72.0	85.0	High PLR. High SHR. Tests latent load versus CE110.
CE160	18430	3754	80.0	85.0	High PLR. High SHR. Tests EDB versus CE150.
CE165	18430	3754	74.0	105.0	High PLR. High SHR. Tests ODB & EDB interaction with latent load versus CE160.
CE170	7166	3754	72.0	85.0	Mid PLR. Mid SHR. Tests low sensible load versus CE150.
CE180	7166	15018	72.0	85.0	High PLR. Low SHR. Tests SHR versus CE150. Tests high latent load versus CE170.
CE185	7166	15018	72.0	115.0	High PLR. Low SHR. Tests ODB versus CE180.
CE190	922	1877	72.0	85.0	Low PLR. Low SHR Tests low PLR at constant SHR vs CE180. Tests latent load at low PLR versus CE140.
CE195	922	1877	72.0	115.0	Low PLR. Low SHR Tests ODB at low PLR & SHR versus CE190. Tests low PLR at constant SHR vs CE185. Tests latent load at low PLR versus CE130.
full load test at ARI conditions					
CE200	20890	6200	80.0	95.0	Tests for ARI indoor wetbulb temperature at full sensible and latent loads.

Abbreviations: PLR = Part Load Ratio; ODB = outdoor drybulb temperature;
EDB = entering drybulb temperature; vs = versus;
SHR = Sensible Heat Ratio; ARI = Air Conditioning and Refrigeration Institute.

*Internal Gains are internally generated sources of heat and humidity that are not related to operation of the mechanical cooling system or its air distribution fan.

Copyrighted material licensed to Sei Ito on 2020-06-26 for licensee's use only.
All rights reserved. No further reproduction or distribution is permitted. Distributed by Techstreet for ASHRAE, www.techstreet.com

Table B1-8 Space-Cooling Equipment BESTEST Comparative Test Case Descriptions for Sections 5.3.3 and 5.3.4

DYNAMIC TESTS - Hot and Humid Weather (New Orleans, LA), Near-Adiabatic Building Envelope						
Case	Internal Gains Sensible	Internal Gains Latent	Cooling Setpoint (°C)	Infil. (ACH)	Outside Air (ACH)	Comments
Preliminary Series						
CE300 Base Case (15% OA)	mid	mid	25	0	1.734	Supply fan runs continously, compressor cycles as needed, expanded performance data. Tests outside air versus CE500.
CE310 High latent load	mid	high	25	0	1.734	Tests high latent load versus CE300.
CE320 Infiltration	mid	mid	25	11.558 [a]	0.000	Tests high infiltration versus CE300, CE330.
CE330 Outside air	mid	mid	25	0	11.558 [a]	Tests high outside air versus CE300, CE320.
CE340 Infil./OA interaction	mid	mid	25	5.779 [a]	5.779 [a]	Tests infil./OA interaction versus CE300, and CE320 or CE330.
CE350 Thermostat set up	mid	mid	25/35	0	1.734	Tests thermostat set up control versus CE300.
CE360 Undersize	high	mid	25	0	1.734	Tests overloaded system versus CE300.
Economizer Series					**Min OA**	**(Temperature control: CE400, CE410, CE420)**
CE400 Temperature control	mid	mid	25	0	1.734	Tests temperature economizer versus CE300.
CE410 Compressor lockout	mid	mid	25	0	1.734	Tests CE400 with compressor lockout versus CE300.
CE420 ODB limit	mid	mid	25	0	1.734	Tests ODB limit (20°C) control versus CE300. **(Enthalpy control: CE430, CE440)**
CE430 Enthalpy control	mid	mid	25	0	1.734	Tests enthalpy control versus CE300.
CE440 Outdoor enthalpy limit	mid	mid	25	0	1.734	Tests outdoor enthalpy limit control versus CE300.
0% OA Cases					**OA**	**(Wet coils: CE500 - CE525)**
CE500 Base Case (0% OA)	mid2	mid2	25	0	0 [b]	Like CE100 but with dynamics & expanded performance data. Supply fan cycles ON/OFF with compressor. Hourly output tests COP f(ODB).
CE510 High PLR	high2	high2	25	0	0 [b]	High PLR. SHR same as CE500. Tests PLR versus CE500.
CE520 Low EDB = 15°C	mid2	mid2	15	0	0 [b]	Tests EDB = 15°C versus CE500.
CE522 Low EDB = 20°C	mid2	mid2	20	0	0 [b]	Tests EDB = 20°C versus CE500.
CE525 High EDB	mid2	mid2	35	0	0 [b]	Tests EDB = 35°C versus CE500, CE520. **(Dry coils: CE530 - CE545)**
CE530 Dry Coil	mid2	0	25	0	0 [b]	Tests dynamic dry-coil expanded performance versus CE500. Hourly output tests COP f(ODB).
CE540 Dry Coil, Low EDB	mid2	0	15	0	0 [b]	Tests EDB = 15°C versus CE530.
CE545 Dry Coil, High EDB	mid2	0	35	0	0 [b]	Tests EDB = 35°C versus CE530.

Abbreviations: ACH = air changes per hour; COP = coefficient of performance; EDB = entering dry-bulb temperature; Infil. = infiltration; OA = outside air; ODB = outdoor dry-bulb temperature; PLR = part load ratio; SHR = sensible heat ratio.

Notes:
"mid" internal gains schedules are relatively high daytime and low nighttime periodically/seasonally adjusted values. See case descriptions for details.
"mid2" is similar to "mid" but with 0 cooler-month internal gains to get 0 cooling at ODB <55°F for 0 OA. See case descriptions.
"high" and "high2" are greater loads relative to "mid" and "mid2," respectively.

[a] Apr. 21 - Oct. 12, 8:00 - 20:00 only; see case descriptions for specific schedule.
[b] OA = 0 implies fan cycles ON/OFF with compressor.

CE300case15.xls, d:a2..n47; Aug 16, 2006

Table B1-9 Space-Heating Equipment BESTEST Cases Descriptions for Section 5.4

Case #	Zone: Outdoor DBT, °C	Zone: Indoor Setpoint Temp. °C	Weather File	Equipment: Capacity, kW	Equipment: Furnace Steady-State Efficiency	Equipment: PLR_f	Equipment: Circulating Fan, W	Equipment: Draft Fan, W
Analytical Verification Tests								
HE100	–30	20	HE100W	10	100%	1	0	0
HE110	–30	20	HE100W	10	80%	1	0	0
HE120	0	20	HE120W	10	80%	0.4	0	0
HE130	20	20	HE130W	10	80%	0.0	0	0
HE140	–20 to 20	20	HE140W	10	80%	0.0–0.8	0	0
HE150	–20 to 20	20	HE140W	10	80%	0.0–0.8	200-cont.	0
HE160	–20 to 20	20	HE140W	10	80%	0.0–0.8	200-cyclic.	0
HE170	–20 to 20	20	HE140W	10	80%	0.0–0.8	200-cont.	50-cyclic
Comparative Tests								
HE210	Varying	20	HE210W	10	80%	0–1.0	200-cyclic.	50-cyclic.
HE220	Varying	15 to 20	HE210W	10	80%	0–1.0	200-cyclic.	50-cyclic.
HE230	Varying	15 to 20	HE210W	5	80%	0–1.0	200-cyclic.	50-cyclic.

Copyrighted material licensed to Sei Ito on 2020-06-26 for licensee's use only. All rights reserved. No further reproduction or distribution is permitted. Distributed by Techstreet for ASHRAE, www.techstreet.com

Table B1-10 Air-Side HVAC Equipment Analytical Verification Test Case Descriptions—Four-Pipe Fan-Coil (FC) System, Section 5.5.1 (I-P Units)

Case	Ambient		Zone	Zone Loads, Btu/h[a]			Coil Load Type	Section Number
	ODB, °F	ODP, °F	IDB, °F	Sensible		Latent		
				Heating	Cooling			
No economizer								
AE101	–20.20	–20.20	70	10000	0	2000	High heating	5.5.1.1
AE103	59.90	26.60	74	0	5000	2000	Low cooling, dry coil	5.5.1.2.1
AE104	80.42	71.78	75	0	10000	2000	High cooling, wet coil	5.5.1.2.2

a. Zone loads do not include outdoor air ventilation loads introduced by the mechanical equipment.

Table B1-11 Air-Side HVAC Equipment Analytical Verification Test-Case Descriptions—Four-Pipe Fan-Coil (FC) System, Section 5.5.1 (SI Units)

Case	Ambient		Zone	Zone Loads, W[a]			Coil Load Type	Section Number
	ODB, °C	ODP, °C	IDB, °C	Sensible		Latent		
				Heating	Cooling			
No economizer								
AE101	–29.0	–29.0	21.111	2931	0	586.1	High heating	5.5.1.1
AE103	15.5	–3.0	23.333	0	1465	586.1	Low cooling, dry coil	5.5.1.2.1
AE104	26.9	22.1	23.889	0	2931	586.1	High cooling, wet coil	5.5.1.2.2

a. Zone loads do not include outdoor air ventilation loads introduced by the mechanical equipment.

Copyrighted material licensed to Sei Ito on 2020-06-26 for licensee's use only.
All rights reserved. No further reproduction or distribution is permitted. Distributed by Techstreet for ASHRAE, www.techstreet.com

Table B1-12 Air-Side HVAC Equipment Analytical Verification Test-Case Descriptions—Single-Zone (SZ) System, Section 5.5.2 (I-P Units)

Case	Ambient		Zone	Zone Loads, Btu/h[a]			Coil Load Type	Section Number
	ODB, °F	ODP, °F	IDB, °F	Sensible		Latent		
				Heating	Cooling			
No economizer								
AE201	–20.20	–20.20	70	10000	0	2000	High heating	5.5.2.1
AE203	59.90	26.60	74	0	5000	2000	Low cooling, dry coil	5.5.2.2.1
AE204	80.42	71.78	75	0	10000	2000	High cooling, wet coil	5.5.2.2.2
AE205	76.82	36.32	74	0	5000	2000	Low cooling, dry coil	5.5.2.2.3
AE206	73.40	69.62	74	0	5000	2000	Low cooling, wet coil	5.5.2.2.4
Return-air comparative dry-bulb economizer outdoor air control								
AE226	73.40	69.62	74	0	5000	2000	Low cooling, wet coil	5.5.2.3.1. AE206 with dry-bulb economizer
Return-air comparative enthalpy economizer outdoor air control								
AE245	76.82	36.32	74	0	5000	2000	Low cooling, dry coil	5.5.2.3.2. AE205 with enthalpy economizer

a. Zone loads do not include outdoor air ventilation loads introduced by the mechanical equipment.

Table B1-13 Air-Side HVAC Equipment Analytical Verification Test-Case Descriptions—Single-Zone (SZ) System, Section 5.5.2 (SI Units)

Case	Ambient		Zone	Zone Loads, W [a]			Coil Load Type	Section Number
	ODB, °C	ODP, °C	IDB, °C	Sensible		Latent		
				Heating	Cooling			
No economizer								
AE201	–29.0	–29.0	21.111	2931	0	586.1	High heating	5.5.2.1
AE203	15.5	–3.0	23.333	0	1465	586.1	Low cooling, dry coil	5.5.2.2.1
AE204	26.9	22.1	23.889	0	2931	586.1	High cooling, wet coil	5.5.2.2.2
AE205	24.9	2.4	23.333	0	1465	586.1	Low cooling, dry coil	5.5.2.2.3
AE206	23.0	20.9	23.333	0	1465	586.1	Low cooling, wet coil	5.5.2.2.4
Return-air comparative dry-bulb economizer outdoor air control								
AE226	23.0	20.9	23.333	0	1465	586.1	Low cooling, wet coil	5.5.2.3.1. AE206 with dry-bulb economizer
Return-air comparative enthalpy economizer outdoor air control								
AE245	24.9	2.4	23.333	0	1465	586.1	Low cooling, dry coil	5.5.2.3.2. AE205 with enthalpy economizer

a. Zone loads do not include outdoor air ventilation loads introduced by the mechanical equipment.

Copyrighted material licensed to Sei Ito on 2020-06-26 for licensee's use only. All rights reserved. No further reproduction or distribution is permitted. Distributed by Techstreet for ASHRAE, www.techstreet.com

Table B1-14 Air-Side HVAC Equipment Analytical Verification Test-Case Descriptions—Constant-Volume (CV) Terminal Reheat System, Section 5.5.3 (I-P Units)

Case	Ambient		Zone	Zone	Zone Loads, Btu/h[a]			Coil Load Type	Section Number
	ODB, °F	ODP, °F	Num.	IDB, °F	Sensible Heating	Sensible Cooling	Latent		
No economizer									
AE301	–20.20	–20.20	1	70	10000	0	2000	High heating	5.5.3.1
			2	72	8000	0	3000		
AE303	59.90	26.60	1	74	0	5000	2000	Low cooling, dry coil	5.5.3.2.1
			2	76	0	8000	3000		
AE304	80.42	71.78	1	75	0	10000	2000	High cooling, wet coil	5.5.3.2.2
			2	77	0	12000	3000		
AE305	76.82	36.32	1	74	0	5000	2000	Low cooling, dry coil	5.5.3.2.3
			2	76	0	8000	3000		
AE306	73.40	69.62	1	74	0	5000	2000	Low cooling, wet coil	5.5.3.2.4
			2	76	0	8000	3000		
Return-air comparative dry-bulb economizer outdoor air control									
AE326	73.40	69.62	1	74	0	5000	2000	Low cooling, wet coil	5.5.3.3.1. AE306 with dry-bulb economizer.
			2	76	0	8000	3000		
Return-air comparative enthalpy economizer outdoor air control									
AE345	76.82	36.32	1	74	0	5000	2000	Low cooling, dry coil	5.5.3.3.2. AE305 with enthalpy economizer.
			2	76	0	8000	3000		

a. Zone loads do not include outdoor air ventilation loads introduced by the mechanical equipment.

Table B1-15 Air-Side HVAC Equipment Analytical Verification Test-Case Descriptions—Constant-Volume (CV) Terminal Reheat System, Section 5.5.3 (SI Units)

Case	Ambient		Zone	Zone	Zone Loads, W[a]			Coil Load Type	Section Number
	ODB, °C	ODP, °C	Num.	IDB, °C	Sensible Heating	Sensible Cooling	Latent		
No economizer									
AE301	–29.0	–29.0	1	21.111	2931	0	586.1	High heating	5.5.3.1
			2	22.222	2345	0	879.2		
AE303	15.5	–3.0	1	23.333	0	1465	586.1	Low cooling, dry coil	5.5.3.2.1
			2	24.444	0	2345	879.2		
AE304	26.9	22.1	1	23.889	0	2931	586.1	High cooling, wet coil	5.5.3.2.2
			2	25.000	0	3517	879.2		
AE305	24.9	2.4	1	23.333	0	1465	586.1	Low cooling, dry coil	5.5.3.2.3
			2	24.444	0	2345	879.2		
AE306	23.0	20.9	1	23.333	0	1465	586.1	Low cooling, wet coil	5.5.3.2.4
			2	24.444	0	2345	879.2		
Return-air comparative dry-bulb economizer outdoor air control									
AE326	23.0	20.9	1	23.333	0	1465	586.1	Low cooling, wet coil	5.5.3.3.1. AE306 with dry-bulb economizer
			2	24.444	0	2345	879.2		
Return-air comparative enthalpy economizer outdoor air control									
AE345	24.9	2.4	1	23.333	0	1465	586.1	Low cooling, dry coil	5.5.3.3.2. AE305 with enthalpy economizer
			2	24.444	0	2345	879.2		

a. Zone loads do not include outdoor air ventilation loads introduced by the mechanical equipment.

Copyrighted material licensed to Sei Ito on 2020-06-26 for licensee's use only. All rights reserved. No further reproduction or distribution is permitted. Distributed by Techstreet for ASHRAE, www.techstreet.com

Table B1-16 Air-Side HVAC Equipment Analytical Verification Test-Case Descriptions—Variable-Air-Volume Terminal Reheat (VAV) System, Section 5.5.4 (I-P Units)

Case	Ambient ODB, °F	Ambient ODP, °F	Zone Num.	Zone IDB, °F	Zone Loads, Btu/h[a] Sensible Heating	Zone Loads, Btu/h[a] Sensible Cooling	Zone Loads, Btu/h[a] Latent	Coil Load Type	Section Number
No economizer									
AE401	–20.20	–20.20	1	70	10000	0	2000	High heating	5.5.4.1
			2	72	8000	0	3000		
AE403	59.90	26.60	1	74	0	5000	2000	Low cooling, dry coil	5.5.4.2.1
			2	76	0	8000	3000		
AE404	80.42	71.78	1	75	0	10000	2000	High cooling, wet coil	5.5.4.2.2
			2	77	0	12000	3000		
AE405	76.82	36.32	1	74	0	5000	2000	Low cooling, dry coil	5.5.4.2.3
			2	76	0	8000	3000		
AE406	73.40	69.62	1	74	0	5000	2000	Low cooling, wet coil	5.5.4.2.4
			2	76	0	8000	3000		
Return-air comparative dry-bulb economizer outdoor air control									
AE426	73.40	69.62	1	74	0	5000	2000	Low cooling, wet coil	5.5.4.3.1. AE406 with dry-bulb economizer
			2	76	0	8000	3000		
Return-air comparative enthalpy economizer outdoor air control									
AE445	76.82	36.32	1	74	0	5000	2000	Low cooling, dry coil	5.5.4.3.2. AE405 with enthalpy economizer
			2	76	0	8000	3000		

a. Zone loads do not include outdoor air ventilation loads introduced by the mechanical equipment.

Table B1-17 Air-Side HVAC Equipment Analytical Verification Test-Case Descriptions—Variable-Air-Volume Terminal Reheat (VAV) System, Section 5.5.4 (SI Units)

Case	Ambient ODB, °C	Ambient ODP, °C	Zone Num.	Zone IDB, °C	Zone Loads, W[a] Sensible Heating	Zone Loads, W[a] Sensible Cooling	Zone Loads, W[a] Latent	Coil Load Type	Section Number
No economizer									
AE401	–29.0	–29.0	1	21.111	2931	0	586.1	High heating	5.5.4.1
			2	22.222	2345	0	879.2		
AE403	15.5	–3.0	1	23.333	0	1465	586.1	Low cooling, dry coil	5.5.4.2.1
			2	24.444	0	2345	879.2		
AE404	26.9	22.1	1	23.889	0	2931	586.1	High cooling, wet coil	5.5.4.2.2
			2	25.000	0	3517	879.2		
AE405	24.9	2.4	1	23.333	0	1465	586.1	Low cooling, dry coil	5.5.4.2.3
			2	24.444	0	2345	879.2		
AE406	23.0	20.9	1	23.333	0	1465	586.1	Low cooling, wet coil	5.5.4.2.4
			2	24.444	0	2345	879.2		
Return-air comparative dry-bulb economizer outdoor air control									
AE426	23.0	20.9	1	23.333	0	1465	586.1	Low cooling, wet coil	5.5.4.3.1. AE406 with dry-bulb economizer
			2	24.444	0	2345	879.2		
Return-air comparative enthalpy economizer outdoor air control									
AE445	24.9	2.4	1	23.333	0	1465	586.1	Low cooling, dry coil	5.5.4.3.2. AE405 with enthalpy economizer
			2	24.444	0	2345	879.2		

a. Zone loads do not include outdoor air ventilation loads introduced by the mechanical equipment.

Copyrighted material licensed to Sei Ito on 2020-06-26 for licensee's use only. All rights reserved. No further reproduction or distribution is permitted. Distributed by Techstreet for ASHRAE, www.techstreet.com

Table B1-18 Section 7.2 Case Descriptions

CASE #/ Test Tier	SUBFLOOR	INFIL. (ACH)	R-VALUE, h·ft^2·°F/Btu		WINDOW DATA				COMMENTS (**Note 1**)
			WALLS (Note 2)						
			CEILING	FLOOR	TYPE	AREA, ft^2 (Note 3)	ORIENT	SHADE	
L100A/ T1	RF	0.67	12, 21	14	SATB	Gross: 270 Net: 197	AVG DIST	NO	Base building; simple construction with typical glazing and insulation; represents average of U.S. building stock
L110A/ T1	RF	**1.5**	12, 21	14	SATB	Gross: 270 Net: 197	AVG DIST	NO	Tests infiltration
L120A/ T1	RF	0.67	**24, 60**	14	SATB	Gross: 270 Net: 197	AVG DIST	NO	Tests wall and ceiling R-value together
L130A/ T1	RF	0.67	12, 21	14	**DLEW**	Gross: 270 Net: 197	AVG DIST	NO	Tests glazing physical properties together
L140A/ T1	RF	0.67	12, 21	14	**None**	**0**	**N/A**	NO	Tests glazing area
L150A/ T1	RF	0.67	12, 21	14	SATB	Gross: 270 Net: 197	**1.0 S**	NO	Tests glazing orientation
L155A/ T1	RF	0.67	12, 21	14	SATB	Gross: 270 Net: 197	**1.0 S**	**H**	Tests south opaque overhang
L160A/ T1	RF	0.67	12, 21	14	SATB	Gross: 270 Net: 197	**0.5E,0.5W**	NO	Tests E/W glazing orientation
L165A/ T2	RF	0.67	12, 21	14	SATB	Gross: 270 Net: 197	**0.5E,0.5W**	**HV**	Tests E/W shading
L170A/ T1	RF	0.67	12, 21	14	SATB	Gross: 270 Net: 197	AVG DIST	NO	**Internal loads = 0;** tests internal loads
L200A/ T1	RF	**1.5**	**5, 12**	**4**	SATB	Gross: 270 Net: 197	AVG DIST	NO	Lumped sensitivity low efficiency; tests HERS ability to cover wide range of construction
L202A/ T1	RF	**1.5**	**5, 12**	**4**	SATB	Gross: 270 Net: 197	AVG DIST	NO	**Exterior solar absorptance = 0.2;** tests low solar absorptance
L302A/ T1	**SLAB**	0.67	12, 21	**UNINS**	SATB	Gross: 270 Net: 197	AVG DIST	NO	Tests ground coupling with uninsulated slab using ASHRAE perimeter method
L304A/ T1	**SLAB**	0.67	12, 21	**EDGE INS**	SATB	Gross: 270 Net: 197	AVG DIST	NO	Tests perimeter insulated slab using ASHRAE perimeter method
L322A/ T1	**BASEMENT**	0.67	12, 21 **(Note 4)**	**UNINS**	SATB	Gross: 270 Net: 197	AVG DIST	NO	Tests ground coupling with uninsulated full basement using ASHRAE method

Copyrighted material licensed to Sei Ito on 2020-06-26 for licensee's use only.
All rights reserved. No further reproduction or distribution is permitted. Distributed by Techstreet for ASHRAE, www.techstreet.com

Table B1-18 Section 7.2 Case Descriptions (Continued)

CASE #/ Test Tier	SUBFLOOR	INFIL. (ACH)	R-VALUE, $h \cdot ft^2 \cdot °F/Btu$		WINDOW DATA				COMMENTS (**Note 1**)
			WALLS (Note 2)						
			CEILING	FLOOR	TYPE	AREA, ft^2 (Note 3)	ORIENT	SHADE	
L324A/ T1	**BASEMENT**	0.67	12, 21 **(Note 4)**	**UNINS**	SATB	Gross: 270 Net: 197	AVG DIST	NO	Tests ground coupling with insulated full basement using ASHRAE method
P100A/ T2	RF	0.67	**24, 60**	**23**	**DW**	**Gross: 325 Net: 237**	**1.0 S**	NO	**High-mass passive solar construction;** base building for P-series cases
P105A/ T2	RF	0.67	**24, 60**	**23**	**DW**	**Gross: 325 Net: 237**	**1.0 S**	**H**	Tests south opaque overhang
P110A/ T2	RF	0.67	**24, 60**	**23**	**DW**	**Gross: 325 Net: 237**	**1.0 S**	NO	**Low-mass version of passive base case;** tests mass effect
P140A/ T2	RF	0.67	**24, 60**	**23**	**None**	**0**	**N/A**	NO	Tests glazing area
P150A/ T2	RF	0.67	**24, 60**	**23**	**DW**	**Gross: 325 Net: 237**	AVG DIST	NO	Tests glazing orientation

ABBREVIATIONS
Test Tier: T1 = Tier 1, T2 = Tier 2
SUBFLOOR = construction below main floor, RF = raised floor, SLAB = slab on grade, BASEMENT = full basement
INFIL. (ACH) = infiltration (air changes per hour)
R-VALUE, FLOOR: UNINS = slab or basement coupled to ground, EDGE INS = 4 ft deep perimeter slab insulation
WINDOW DATA: SATB = single pane, clear glass, aluminum frame with thermal break; DLEW = double pane, low e glass, wood frame, insulated spacer
DW = double pane, clear glass, wood frame, metal spacer
ORIENT = orientation; AVG DIST = window area distributed over walls in proportion to total exterior wall area
N/A = not applicable; 1.0 S = all windows on south wall; 0.5E, 0.5W = 50% of window area on east wall and 50% of window area on west wall
SHADE = window shading device; H = horizontal shade (overhang); HV = horizontal and vertical shading (overhang and fins)

NOTES
Note1: Changes to Case L100A are highlighted with bold font.
Note 2: These are composite R-values, including all materials, films, and the presence of the attic for ceiling R-value; see Section 7.2 for more detail.
Note 3: Gross area is the total window area, including the frame; net area is the area of just the glass portion of the window.
Note 4: Basement below-grade wall R-values including the ground are: L322A = R-8, L324A = R-19.

Copyrighted material licensed to Sei Ito on 2020-06-26 for licensee's use only.
All rights reserved. No further reproduction or distribution is permitted. Distributed by Techstreet for ASHRAE, www.techstreet.com

(This annex is not part of the standard. It is merely informative and does not contain requirements necessary for conformance to the standard. It has not been processed according to the ANSI requirements for a standard and may contain material that has not been subject to public review or a consensus process. Unresolved objectors on informative material are not offered the right to appeal at ASHRAE or ANSI.)

INFORMATIVE ANNEX B2
ABOUT TYPICAL METEOROLOGICAL YEAR (TMY) WEATHER DATA

TMY data are used in Standard 140, Sections 5.2.1, 5.2.2, and 5.2.3 for the following reasons:

a. The original research that is the foundation of Standard 140, *IEA BESTEST*, was performed by the National Renewable Energy Laboratory in collaboration with the International Energy Agency [B-29]. The underlying research used in this standard began in 1990 and was completed in 1993. At that time, TMY data represented the state of the art for hourly weather data.
b. During the process of converting the original NREL/IEA work into a standard method of test, SPC 140 considered changing the weather data file and format. The problems with this were as follows:
    1. Some parts of the test specification are based on the specific TMY data file provided with Standard 140. For example, the convective portion of annual average exterior combined surface coefficients—provided for those programs that do not calculate exterior convection hourly—are related to the average annual wind speed from the original weather data file. This means that some inputs in the test specification would need to be changed.
    2. The example results of Informative Annex B8 would not be consistent with user-generated results, if new weather data were used, unless the test cases were rerun for all the programs shown. For many users of Standard 140, the evaluation of results will be facilitated by being able to compare the results for their program with the example results presented in Informative Annex B8, which requires using consistent testing methods and weather data.

The original research for Section 7.2, *HERS BESTEST*, was performed by NREL in collaboration with the U.S. HERS Council Technical Committee [B-38,B-39]. The underlying research began in 1993 and was completed in 1995. At that time, TMY data represented the state-of-the-art for hourly weather data. (TMY2 data were just becoming available toward the end of the project, but the work was too far along to switch weather data files, which would have required adjusting test specifications.)

For Sections 5.3.1 and 5.3.2, either TMY-format data or TMY2-format data may be used as described in Normative Annex A1, Section A1.2.1.

For convenience, we have reprinted the following discussion from the documentation for DOE2.1A *Reference Manual* (p. VIII–31) [B-40].

> Solar radiation and surface meteorological data recorded on an hourly basis are maintained at the National Climatic Data Center (NCDC). These data cover recording periods from January 1953 through December 1975 for 26 data rehabilitation stations, although the recording periods for some stations may differ. The data are available in blocked (compressed) form on magnetic tape (SOLMET) for the entire recording period for the station of interest. ***Note:*** Hourly readings for meteorological data are available through 1964; subsequent readings are on a three-hour basis.
>
> Contractors desiring to use a database for simulation or system studies for a particular geographic area require a database that is more tractable than these and also one that is representative of the area. Sandia National Laboratory has used statistical techniques to develop a method for producing a typical meteorological year for each of the 26 rehabilitation stations. This section describes the use of these magnetic tapes.
>
> The TMY tapes comprise specific calendar months selected from the entire recorded span for a given station as the most representative, or typical, for that station and month. For example, a single January is chosen from the 23 Januaries for which data are recorded from 1953 through 1975 on the basis of its being most nearly like the composite of all 23 Januaries. Thus, for a given station, January of 1967 might be selected as the typical meteorological month (TMM) after a statistical comparison with all of the other 22 Januaries. This process is pursued for each of the other calendar months, and the twelve months chosen then constitute the TMY.
>
> Although the data have been rehabilitated by NCDC, some recording gaps do occur in the SOLMET tapes. Moreover, there are data gaps because of the change from one-hour to three-hour meteorological data recording in 1965. Consequently, as TMY tapes were being constituted from the SOLMET data, the variables data for barometric pressure, temperature, and wind velocity and direction were scanned on a month-by-month basis, and missing data were replaced by linear interpolation. Missing data in the leading and trailing positions of each monthly segment are replaced with the earliest/latest legitimate observation.
>
> Also, since the TMMs were selected from different calendar years, discontinuities occurred at the month interfaces for the above continuous variables. Hence, after the monthly segments were rearranged in calendar order, the discontinuities at the month interfaces were ameliorated by cubic spline smoothing covering the six-hourly points on either side of the interface.

Copyrighted material licensed to Sei Ito on 2020-06-26 for licensee's use only. All rights reserved. No further reproduction or distribution is permitted. Distributed by Techstreet for ASHRAE, www.techstreet.com

(This annex is not part of the standard. It is merely informative and does not contain requirements necessary for conformance to the standard. It has not been processed according to the ANSI requirements for a standard and may contain material that has not been subject to public review or a consensus process. Unresolved objectors on informative material are not offered the right to appeal at ASHRAE or ANSI.)

INFORMATIVE ANNEX B3 INFILTRATION AND FAN ADJUSTMENTS FOR ALTITUDE

Air density correction for altitude was required in the development of the analytical solutions and by modelers generating example results with programs that did not automatically adjust for altitude. This annex details the altitude correction used in the development of the analytical solutions of Standard 140. These corrections differ slightly from the 2009 *ASHRAE Handbook—Fundamentals*, Chapter 1 [B-10]. Section B3.3 below discusses this in more detail.

B3.1 Adjustments for Test Cases of Sections 5.2.1, 5.2.2, and 5.2.3. The decline in air density with altitude may be expressed according to the following exponential curve fit:

$$\rho_{air,u} = \rho_{air,0} \times e^{(a)(elev)} \qquad \text{(B3-1)}$$

where

$\rho_{air,u}$ = air density at specified elevation

$\rho_{air,0}$ = air density at sea level

e = inverse Ln

a = -1.219755×10^{-4}/m

$elev$ = elevation, m

Air density at sea level = 1.201385 kg/m^3 (this example value is the SI conversion from 0.075 lb/ft^3, which is the approximate value for air at 70°F, 14.696 psia; this value was used in *IEA BESTEST* [B-29] [Appendix B] and is also cited for "standard air [I-P]" in *ASHRAE Terminology of HVAC&R* [B-41]).

Air density at 1609 m = 0.987298 kg/m^3

The corrected infiltration rate for 1609 m altitude = (specified rate) × (0.987298/1.201385). (For example, 0.5 ach becomes 0.41 ach, and 1 ach becomes 0.822 ach.)

The corrected vent fan capacity for 1609 m altitude = (specified capacity using converted I-P conditions at sea level) × (0.987298/1.201385). (For example, 1703.16 m^3/h becomes 1399.7 m^3/h.) ***Note:*** U.S. Standard Atmosphere conditions with dry air behaving as a perfect gas at 15°C and 101.325 kPa (2005 *ASHRAE Handbook—Fundamentals*, p. 6.1 [B-32]) implies air density = 1.225 kg/m^3.

B3.2 Adjustments for Section 7.2 Test Cases. The decline in air density with altitude may be expressed according to the following exponential curve fit:

$$\rho_{air,u} = \rho_{air,0} \times e^{(a)(elev)}$$

For *HERS BESTEST* [B-38], parameters of Equation B3-1 are as follows:

$\rho_{air,u}$ = air density at specified elevation

$\rho_{air,0}$ = air density at sea level = 0.075 lb/ft^3 (approximate value)

e = inverse Ln

a = $-3.71781196 \times 10^{-5}$/ft

$elev$ = elevation, ft

This results in the following:

Air density at 6145 ft = 0.05968 lb/ft^3

Air density at 2178 ft = 0.06917 lb/ft^3

If the software being tested does not allow variation of air density, the specified infiltration rate is adjusted as follows:

Corrected infiltration rate for 6145 ft altitude = (Specified rate) × (0.05968/0.075)

Corrected infiltration rate for 2178 ft altitude = (Specified rate) × (0.06917/0.075)

Table B3-1 summarizes the appropriate variation of infiltration rates from HERS BESTEST specified values for the base case (Case L100A) and cases where infiltration rates or building air volume have varied. These corrections are only to be used with software that does not automatically account for local variations in air density.

Table B3-1 also includes values of equivalent thermal conductance due to infiltration UA_{inf} corresponding to altitude-corrected air densities where:

$$UA_{inf} = \rho_{air,u} \times V \times c_p$$

and where

V = volumetric air flow rate (ft^3/h) converted from values in Table B3-1

c_p = specific heat of air = 0.240 Btu/(lb$_m$·°F)

B3.3 Comparison with *ASHRAE Handbook—Fundamentals*. The altitude correction in Sections B3.1 and B3.2 was created by fitting an exponential curve to data in the 1993 *ASHRAE Handbook—Fundamentals*, Chapter 6, Table 1 [B-26]. Beginning in 2001, *ASHRAE Handbook—Fundamentals* included an equation for calculating altitude corrections in addition to the tabular data. This equation is slightly different from that described in this annex, with a maximum difference of 0.2%.

The decline in atmospheric pressure with altitude is presented in the 2009 *ASHRAE Handbook—Fundamentals*, p. 1.1, Equation 3 [B-10], as follows:

$$p = 101.325(1 - 2.25577 \times 10^{-5} Z)^{5.2559}$$

where

p = atmospheric pressure at elevation, bar

Z = elevation, m

A dimensionless altitude correction factor for pressure or density (these are directly proportional assuming air is an ideal gas) can be expressed as follows:

$$cf = (1 - 2.25577 \times 10^{-5} Z)^{5.2559}$$

In the Annex B3, Section B3.1 example, infiltration of 1 ach at an elevation of 1609 m is equivalent to 0.8218 ach using the Annex B3 equation versus 0.8234 ach at sea level using the *ASHRAE Handbook—Fundamentals* equation.

Copyrighted material licensed to Sei Ito on 2020-06-26 for licensee's use only. All rights reserved. No further reproduction or distribution is permitted. Distributed by Techstreet for ASHRAE, www.techstreet.com

Table B3-1 HERS BESTEST Infiltration Rate Adjustment for Altitude

	Air Volume (Note 1) ft^3	Altitude ft	ach	cfm	UA_{inf} Btu/(h·°F)
Case L100A	12312				
HERS with automatic altitude adjustment			0.67	137.5	
HERS with site fixed at sea level					
Colorado Springs, CO		6145	0.533	109.4	118.2
Las Vegas, NV		2178	0.618	126.8	136.9
Case L110A	12312				
HERS with automatic altitude adjustment			1.50	307.8	
HERS with site fixed at sea level					
Colorado Springs, CO		6145	1.194	244.9	264.5
Las Vegas, NV		2178	1.383	283.9	306.6
Case L322A (Note 2)	24624				
HERS with automatic altitude adjustment			0.335	137.5	
HERS with site fixed at sea level					
Colorado Springs, CO		6145	0.267	109.4	118.2
Attic (all cases)	3463				
HERS with automatic altitude adjustment			2.40	138.5	
HERS with site fixed at sea level					
Colorado Springs, CO		6145	1.910	110.2	
Las Vegas, NV		2178	2.213	127.7	

Note 1: Air volumes listed for specific cases only include those of the conditioned zones. Unconditioned attic air volume is listed separately.

Note 2: Only used if basement model combines main floor and basement zones into a single aggregate zone. Otherwise, Case L322A main floor zone uses the Case L100A infiltration rate and the basement zone infiltration rate is 0 ach.

Copyrighted material licensed to Sei Ito on 2020-06-26 for licensee's use only.
All rights reserved. No further reproduction or distribution is permitted. Distributed by Techstreet for ASHRAE, www.techstreet.com

(This annex is not part of the standard. It is merely informative and does not contain requirements necessary for conformance to the standard. It has not been processed according to the ANSI requirements for a standard and may contain material that has not been subject to public review or a consensus process. Unresolved objectors on informative material are not offered the right to appeal at ASHRAE or ANSI.)

INFORMATIVE ANNEX B4
EXTERIOR COMBINED RADIATIVE AND CONVECTIVE SURFACE COEFFICIENTS

B4.1 General Equation. ASHRAE and some simulation programs (e.g., BLAST 3.0 Level 193, using its option for simple outside surface conductance) calculate the exterior combined radiative and convective surface coefficient as a second order polynomial in wind speed of the following form:

$$h = a_1 + a_2 V + a_3 V^2 \qquad \text{(B4-1)}$$

where the units of h are W/(m^2·K) and the a coefficients are dependent on the surface texture.

B4.2 Exterior Surface Coefficients for Test Cases of Sections 5.2.1, 5.2.2, and 5.2.3. Assuming a surface texture of brick or rough plaster and a mean annual wind speed of 4.02 m/s, then the information in Table B4-1 is applicable.[B-33]

For cases where the exterior infrared emittance = 0.9, the exterior combined surface coefficient for all walls and roofs will be 29.3 W/(m^2·K) and the exterior combined surface coefficient for glass and high-conductance walls/opaque windows will be 21.0 W/(m^2·K).

For cases where the exterior infrared emittance = 0.1, the exterior combined surface coefficient for all walls and roofs will be 25.2 W/(m^2·K) and the exterior combined surface coefficient for high-conductance walls/opaque windows will be 16.9 W/(m^2·K).

For convenience of input, the exterior combined radiative and convective surface coefficient for the transparent window and the opaque window are assumed to be the same, even though the hemispherical infrared emittance of ordinary uncoated window glass is usually 0.84. This is equivalent to assuming that the emittance of the glass is 0.9.

Convective and radiative portions of these coefficients are disaggregated in Informative Annex B5.

Table B4-1 Polynomial Coefficients for Describing Exterior Surface Coefficient as a Function of Wind Speed (SI Units)

Material	a_1	a_2	a_3
Stucco	11.58	5.894	0.0
Brick/rough plaster	12.49	4.065	0.028
Concrete	10.79	4.192	0.0
Clear pine	8.23	4.0	–0.057
Smooth plaster	10.22	3.1	0.0
Glass	8.23	3.33	–0.036

Table B4-2 Polynomial Coefficients for Describing Exterior Surface Coefficient as a Function of Wind Speed (I-P Units)

Material	a_1	a_2	a_3
Stucco	2.04	0.535	0.0
Brick/rough plaster	2.20	0.369	0.001329
Concrete	1.90	0.380	0.0
Clear pine	1.45	0.363	–0.002658
Smooth plaster	1.80	0.281	0.0
Glass	1.45	0.302	–0.001661

B4.3 Exterior Surface Coefficients for Section 7.2 Test Cases. For HERS BESTEST, the a coefficients that apply for Equation B4-1 (using I-P units) are listed in Table B4-2.

Assuming a surface texture of brick or rough plaster, and a mean annual wind speed of 10.7 mph (9.304 knots), then

Exterior combined surface coefficient for all walls and roofs

$$= 5.748 \text{ Btu/(h·ft}^2\text{·°F)}$$

For programs requiring a method for disaggregation of infrared and convective surface coefficients from combined surface coefficients, see Informative Annex B5.

Copyrighted material licensed to Sei Ito on 2020-06-26 for licensee's use only. All rights reserved. No further reproduction or distribution is permitted. Distributed by Techstreet for ASHRAE, www.techstreet.com

(This annex is not part of the standard. It is merely informative and does not contain requirements necessary for conformance to the standard. It has not been processed according to the ANSI requirements for a standard and may contain material that has not been subject to public review or a consensus process. Unresolved objectors on informative material are not offered the right to appeal at ASHRAE or ANSI.)

INFORMATIVE ANNEX B5
INFRARED PORTION OF FILM COEFFICIENTS

B5.1 General Equation. The infrared portion of film coefficients is based on the linearized gray-body radiation equation [B-97]:

$$h_i = 4\varepsilon\sigma T^3 \qquad \text{(B5-1)}$$

B5.2 Tabulation for Test Cases of Sections 5.2.1, 5.2.2, and 5.2.3. For the test cases of Sections 5.2.1, 5.2.2, and 5.2.3, the parameters of Equation B5-1 are as follows:

ε = infrared emittance

σ = 5.67×10^{-8} W/(m^2·K^4) (Stefan-Boltzmann constant)

T = average temperature of surrounding surfaces (assumed 10°C [283 K] for outside, 20°C [293 K] for inside)

K = Kelvin (absolute 0 = –273.16°C)

h_i = infrared radiation portion of surface coefficient

h_c = convective portion of surface coefficient

h_s = total combined interior surface coefficient

h_o = total combined outside surface coefficient

For convenience of input, the interior combined radiative and convective surface coefficient for the opaque window and the transparent window are assumed the same, even though the hemispherical infrared emittance of ordinary uncoated window glass is usually 0.84. This is equivalent to assuming that the emittance of the glass is 0.9. Table B5-1 shows convective and infrared radiative portion of film coefficients for various surface types of *IEA BESTEST* [B-29].

B5.3 Tabulation for Section 7.2 Test Cases. For the test cases of Section 7.2, the parameters of Equation B5-1 are as follows:

ε = infrared emittance

σ = 0.1718×10^{-8} Btu/(h·ft^2·R^4) (Stefan/Boltzmann constant)

Table B5-1 Disaggregation of Film Coefficients Versus Surface Infrared Emittance for Various Surface Types Related to Tests of Sections 5.2.1, 5.2.2, and 5.2.3 (SI Units)

	ε = 0.9	ε = 0.84	ε = 0.1
Very Smooth Surface Outside[a] (T = 10°C) (283 K)			
h_i (W/[m^2·K])	4.63	4.32	0.51
h_o (W/[m^2·K])	21	20.69	16.88
h_c (W/[m^2·K]) = $h_o - h_i$	16.37	16.37	16.37
Inside Surface (T = 20°C) (293 K)			
h_i (W/[m^2·K])	5.13	4.79	0.57
h_s (W/[m^2·K])	8.29	7.95	3.73
h_c (W/[m^2·K]) = $h_s - h_i$	3.16	3.16	3.16
Brick/Rough Plaster Outside[a] (T = 10°C) (283 K)			
h_i (W/[m^2·K])	4.63		0.51
h_o (W/[m^2·K])	29.3		25.18
h_c (W/[m^2·K])	24.67		24.67

a. Based on a mean annual wind speed of 4.02 m/s for outside surfaces.

T = average temperature of surrounding surfaces (assumed 50°F [510°R] for outside, 68°F [528°R] for inside)

R = rankine (absolute zero = 0°R = –459.67°F)

h_i = infrared radiation portion of surface coefficient

Other nomenclature used for Tables B5-2 and B5-3 are as follows:

h_c = convective portion of surface coefficient

h_s = total combined interior surface coefficient

h_o = total combined outside surface coefficient

Tables B5-2 and B5-3 show convective and infrared radiative portions of film coefficients for the various orientations and surfaces of *HERS BESTEST* [B-38]. In Table B5-2, combined exterior surface coefficients are evaluated using the algorithm of Informative Annex B4; combined interior surface coefficients are based on ASHRAE data (see 1993 *ASHRAE Handbook—Fundamentals,* p. 22.1 [B-26]). In Table B5-3, combined interior and exterior surface coefficients are based on the output of WINDOW 4.1 [B-25].

Copyrighted material licensed to Sei Ito on 2020-06-26 for licensee's use only. All rights reserved. No further reproduction or distribution is permitted. Distributed by Techstreet for ASHRAE, www.techstreet.com

Table B5-2 Disaggregated Film Coefficients for Opaque Surfaces for Section 7.2 Tests (I-P Units)

Inside Horizontal Surface (T = 68°F) (528°R) (ε = 0.9)	
h_i, Btu/(h·ft^2·°F)	0.908
h_s, Btu/(h·ft^2·°F)	1.307
h_c, Btu/(h·ft^2·°F) = $h_s - h_i$	0.399
Inside Vertical Surface (T = 68°F) (528°R) (ε = 0.9)	
h_i, Btu/(h·ft^2·°F)	0.908
h_s, Btu/(h·ft^2·°F)	1.460
h_c, Btu/(h·ft^2·°F) = $h_s - h_i$	0.552
Inside Sloped (18.4^0) Surface (T = 68°F) (528°R) (ε = 0.9)	
h_i, Btu/(h·ft^2·°F)	0.908
h_s, Btu/(h·ft^2·°F)	1.330
h_c, Btu/(h·ft^2·°F) = $h_s - h_i$	0.422
Brick/Rough Plaster, Outside (T = 50°F) (510°R) (windspeed = 10.7 mph) (ε = 0.9)	
h_i, Btu/(h·ft^2·°F)	0.819
h_o, Btu/(h·ft^2·°F)	5.748
h_c, Btu/(h·ft^2·°F) = $h_o - h_i$	4.929
Brick/Rough Plaster, Outside (T = 50°F) (510°R) (windspeed = 0.0 mph) (ε = 0.9)	
h_i, Btu/(h·ft^2·°F)	0.819
h_o, Btu/(h·ft^2·°F)	2.200
h_c, Btu/(h·ft^2·°F) = $h_o - h_i$	1.381

Table B5-3 Disaggregated Film Coefficients for Windows and Window Frames for Section 7.2 Tests (I-P Units)

Very Smooth Surface Outside (T = 50°F) (510°R) (windspeed = 10.7 mph) (ε = 0.84)	**All Types of Windows**		
h_i, Btu/(h·ft^2·°F)	0.764		
h_o, Btu/(h·ft^2·°F)	4.256		
h_c, Btu/(h·ft^2·°F) = $h_o - h_i$	3.492		
Inside Vertical Surface (T = 68°F) (528°R) (ε = 0.84)	**SATB**	**DLEW**	**DW**
h_i, Btu/(h·ft^2·°F)	0.848	0.848	0.848
h_s, Btu/(h·ft^2·°F)	1.460	1.333	1.397
h_c, Btu/(h·ft^2·°F) = $h_s - h_i$	0.612	0.485	0.549

SATB = Single-pane, clear glass, aluminum frame with thermal break
DLEW = Double-pane, low-emissivity glass, wood frame with insulated spacer
DW = Double-pane, clear glass, wood frame with metal spacer

Copyrighted material licensed to Sei Ito on 2020-06-26 for licensee's use only.
All rights reserved. No further reproduction or distribution is permitted. Distributed by Techstreet for ASHRAE, www.techstreet.com

(This annex is not part of the standard. It is merely informative and does not contain requirements necessary for conformance to the standard. It has not been processed according to the ANSI requirements for a standard and may contain material that has not been subject to public review or a consensus process. Unresolved objectors on informative material are not offered the right to appeal at ASHRAE or ANSI.)

INFORMATIVE ANNEX B6 INCIDENT-ANGLE-DEPENDENT WINDOW OPTICAL PROPERTY CALCULATIONS

B6.1 Calculation of Optical Properties Listed in Table 5-7. In Table 5-7 (Section 5.2.1.11), window transmittance and inner and outer pane absorptances are based on data from, and the calculation methods associated with, Table B6-1. In Table 5-7, the absorptance values for incidence angles of 10 and 50 degrees are from cosine-of-incident-angle interpolations of values listed in Table B6-1. Reflectances listed in Table 5-7 are based on the following formula:

$$\text{Reflectance} = 1 - (\text{transmittance}) - (\text{outer pane absorptance}) - (\text{inner pane absorptance})$$

Solar heat gain coefficients (SHGC) are calculated based on the equations of the 1993 *ASHRAE Handbook—Fundamentals*, p. 27.18 [B-26], using the optical properties listed in Table 5-7 and the thermal properties listed in Table 5-6 (Section 5.2.1.11).

Nomenclature and associated equations for calculating the angle-dependent solar transmittance of glass in air listed in Table B6-1 are listed below. Inner- and outer-pane solar absorptances listed in Table B6-1 were calculated using the program ESP-WIN [B-42].

Nomenclature

ABSi	inner window pane solar absorptance
ABSo	outer window pane solar absorptance
AOI	angle of incidence
AOR	angle of refraction
INDRA	index of refraction for air = 1.0
INDRG	index of refraction for glass = 1.526 (for this case)
RPERP	perpendicular reflectance (component of polarization)
RPAR	parallel reflectance (component of polarization)
R	reflectance: (RPERP + RPAR)/2
n	number of panes of glass = 2 (for this case)
Tr	transmittance due to reflectance losses (transmittance if there were just reflectance losses and no absorptance losses)
Tabs	transmittance due to absorptance losses (transmittance if there were just absorptance losses and no reflectance losses)
T	total transmittance ≅ $Tr \times Tabs$
K	extinction coefficient = 0.0196/mm (for this case)
TH	thickness of glass = 3.175 mm (for this case)
L	path length = TH/(cos AOR)
ARCSIN	INVSIN
e	INVLn = EXP (value)

Snell's Law

INDRA/INDRG = sin AOR/sin AOI

AOR = ARCSIN [(sin AOI)/INDRG]

Fresnel Equations (Reflectance at 1 air to glass interface)

$$\text{RPERP} = [\sin^2(\text{AOR} - \text{AOI})]/[\sin^2(\text{AOR} + \text{AOI})]$$

$$\text{RPAR} = [\tan^2(\text{AOR} - \text{AOI})]/[\tan^2(\text{AOR} + \text{AOI})]$$

$$R = (\text{RPERP} + \text{RPAR})/2$$

Fresnel Equations (Transmittance due to reflectance with several panes)

$$Tr,n = 0.5\ \{[(1 - \text{RPERP})/(1 + (2n - 1)\text{RPERP})] + [(1 - \text{RPAR})/(1 + (2n - 1)\text{RPAR})]\}$$

Bouguer's Law (Transmittance due to absorptance)

$$Tabs = e^{[n(-\text{KL})]}$$

$$T \cong Tr \times Tabs$$

B6.2 Comparison of Two Algorithms for Calculating Window Transmittance. The angle-dependent optical properties used in developing some of the example results (where simulation software allowed input or where intermediate simulation output could be compared to such properties) are those listed in Table 5-7. Table B6-2 compares transmittance and SHGCs calculated using the equations of Section B6.1 to the same properties calculated by WINDOW 4.0 [B-43]; the WINDOW 4.0 calculation is also based on the general optical properties listed in Table 5-6. While the WINDOW 4.0 algorithm is more detailed than the algorithm presented in Section B6.1, neither method for calculating optical properties has been perfectly validated.

Table B6-2 shows that at higher incidence angles there is an increasing difference between the transmittance calculated by the two algorithms. This difference occurs because of a simplification associated with the algorithm of Section B6.1. The error caused by the simplification is magnified at the higher incidence angles but is still small in the context of solar heat gains. The resulting difference in solar heat gains to the building is minimalized for two reasons:

a. As incidence angle increases, the intensity of solar radiation incident on a given surface decreases with the cosine of the incidence angle.
b. As incidence angle increases, the solar transmittance of glass decreases as a cosine-like function of the incidence angle.

The direct normal shading coefficient (SC) of 0.907 shown in Table 5-6 (Section 5.2.1.11) was calculated assuming SHGC for reference glass is 0.87 as in the 1993 *ASHRAE Handbook—Fundamentals* (p. 27.19) [B-26]. WINDOW 4.0 calculates direct normal SC = 0.916 and uses a reference glass value of SHGC slightly lower than ASHRAE.

Inner and outer pane solar absorptances calculated by ESP-WIN [B-42] are within 1% of those calculated by WINDOW 4.0 at most incidence angles and are within 3% at the worst point of disagreement (inner pane absorptance at 60 degree incidence angle).

Copyrighted material licensed to Sei Ito on 2020-06-26 for licensee's use only. All rights reserved. No further reproduction or distribution is permitted. Distributed by Techstreet for ASHRAE, www.techstreet.com

Table B6-1 Glazing Properties as a Function of Incidence Angle

Inputs	Double Glazing			(Deg = degrees, Rad = radians)			
AOI (deg)	**INDRA**	**INDRG**	***n***	***K* (mm)**	**TH (mm)**	**AOI (rad)**	**AOR (rad)**
0	1	1.526	2	0.0196	3.175	0	0
10	1	1.526	2	0.0196	3.175	0.174533	0.11404
20	1	1.526	2	0.0196	3.175	0.349066	0.226049
30	1	1.526	2	0.0196	3.175	0.523599	0.333819
40	1	1.526	2	0.0196	3.175	0.698132	0.434794
45	1	1.526	2	0.0196	3.175	0.785398	0.481797
50	1	1.526	2	0.0196	3.175	0.872665	0.525904
60	1	1.526	2	0.0196	3.175	1.047198	0.603483
70	1	1.526	2	0.0196	3.175	1.22173	0.663386
80	1	1.526	2	0.0196	3.175	1.396263	0.701485

Outputs	Double Glazing						
AOI (Deg)	**AOR (Deg)**	**RPERP**	**RPAR**	***R***	***Tr***	***Tabs***	***T***
0	0	0.043362	0.043362	0.043362	0.846519	0.882974	0.747454
10	6.534014	0.045129	0.041626	0.043378	0.846494	0.882255	0.746824
20	12.95164	0.050892	0.036383	0.043638	0.846092	0.880109	0.744654
30	19.12644	0.062238	0.027636	0.044937	0.844069	0.876576	0.739891
40	24.91188	0.082611	0.015932	0.049271	0.837183	0.871771	0.729832
45	27.60496	0.098148	0.009633	0.053891	0.82963	0.868969	0.720922
50	30.13208	0.118995	0.003951	0.061473	0.816809	0.865969	0.707331
60	34.57701	0.185478	0.001448	0.093463	0.75878	0.85971	0.652331
70	38.00921	0.310334	0.041238	0.175786	0.605182	0.853882	0.516754
80	40.1921	0.548629	0.235126	0.391878	0.30955	0.84965	0.263009

Inputs	Single Glazing						
AOI (Deg)	**INDRA**	**INDRG**	***n***	***K***	**TH**	**AOI (Rad)**	**AOR (Rad)**
0	1	1.526	1	0.0196	3.175	0	0
10	1	1.526	1	0.0196	3.175	0.174533	0.11404
20	1	1.526	1	0.0196	3.175	0.349066	0.226049
30	1	1.526	1	0.0196	3.175	0.523599	0.333819
40	1	1.526	1	0.0196	3.175	0.698132	0.434794
45	1	1.526	1	0.0196	3.175	0.785398	0.481797
50	1	1.526	1	0.0196	3.175	0.872665	0.525904
60	1	1.526	1	0.0196	3.175	1.047198	0.603483
70	1	1.526	1	0.0196	3.175	1.22173	0.663386
80	1	1.526	1	0.0196	3.175	1.396263	0.701485

Absorptance of Outer and Inner Panes		
AOI (Deg)	**Outer Pane ABSo**	**Inner Pane ABSi**
0	0.0643	0.0522
20	0.0659	0.0534
30	0.0679	0.0548
40	0.0708	0.0566
48	0.0738	0.058
55	0.0769	0.0587
57	0.0779	0.0587
60	0.0796	0.0585
63	0.0815	0.0579
66	0.0837	0.0568
68	0.0852	0.0558
70	0.0858	0.0544
72	0.089	0.0521
75	0.0911	0.0492
77.5	0.0929	0.0457
80	0.094	0.0413
82	0.0937	0.0372
83.5	0.0924	0.0335
85	0.0892	0.0291
86	0.0854	0.0254
87	0.079	0.0205
88	0.0671	0.0128
89	0.0473	0.0043
89.5	0.0304	0.0004
89.99	0.0011	0

Copyrighted material licensed to Sei Ito on 2020-06-26 for licensee's use only. All rights reserved. No further reproduction or distribution is permitted. Distributed by Techstreet for ASHRAE, www.techstreet.com

Table B6-1 Glazing Properties as a Function of Incidence Angle (Continued)

Outputs	Single Glazing						
AOI (Deg)	**AOR (Deg)**	**RPERP**	**RPAR**	***R***	***Tr***	***Tabs***	***T***
0	0	0.043362	0.043362	0.043362	0.916881	0.939667	0.861563
10	6.534014	0.045129	0.041626	0.043378	0.916857	0.939285	0.861189
20	12.95164	0.050892	0.036383	0.043638	0.916467	0.938142	0.859775
30	19.12644	0.062238	0.027636	0.044937	0.914516	0.936256	0.856222
40	24.91188	0.082611	0.015932	0.049271	0.908011	0.933687	0.847798
45	27.60496	0.098148	0.009633	0.053891	0.901083	0.932185	0.839976
50	30.13208	0.118995	0.003951	0.061473	0.889723	0.930575	0.827954
60	34.57701	0.185478	0.001448	0.093463	0.842096	0.927205	0.780796
70	38.00921	0.310334	0.041238	0.175786	0.72356	0.924058	0.668611
80	40.1921	0.548629	0.235126	0.391878	0.455366	0.921765	0.419741

Table B6-2 Angular Dependence of SHGC

Incidence Angle	Table 5-7		WINDOW 4.0	
	Trans*	**SHGC***	**Trans***	**SHGC***
0	0.747	0.789	0.748	0.787
10	0.747	0.789	0.747	0.786
20	0.745	0.787	0.745	0.785
30	0.740	0.784	0.739	0.780
40	0.730	0.775	0.725	0.767
50	0.707	0.754	0.693	0.737
60	0.652	0.700	0.622	0.666
70	0.517	0.563	0.475	0.518
80	0.263	0.302	0.229	0.266

*Note: Trans = Transmittance, SHGC = solar heat gain coefficient

Copyrighted material licensed to Sei Ito on 2020-06-26 for licensee's use only.
All rights reserved. No further reproduction or distribution is permitted. Distributed by Techstreet for ASHRAE, www.techstreet.com

(This annex is not part of the standard. It is merely informative and does not contain requirements necessary for conformance to the standard. It has not been processed according to the ANSI requirements for a standard and may contain material that has not been subject to public review or a consensus process. Unresolved objectors on informative material are not offered the right to appeal at ASHRAE or ANSI.)

INFORMATIVE ANNEX B7
DETAILED CALCULATION OF SOLAR FRACTIONS

B7.1 Solar Fraction Approximation Algorithm for Test Cases of Sections 5.2.1, 5.2.2, and 5.2.3. Solar fraction approximations are calculated from the following:

$$SF_n = B1_n + B2_n + B3_n + BR_n$$

where

n = a particular surface

SF = total solar fraction

B1 describes the first bounce of incident shortwave radiation, assuming all of it initially hits the floor.

$B1_{floor}$ = α

$B1_{all\ other}$ = 0

α = interior shortwave absorptance of opaque surfaces (all interior surfaces have the same absorptance except for the transparent window absorptance, which is denoted as α_w).

B2 describes the second bounce such that shortwave radiation diffusely reflected by the floor is distributed over other surfaces in proportion to their view factor-absorptance product.

$$B2_{floor\text{-}floor} = 0$$

$$B2_{floor\text{-}other\ opaque} = (1 - \alpha)(FF_i)(\alpha)$$

$$B2_{floor\text{-}window\ lost} = (1 - \alpha)(FF_i)\ \{1 - [\rho_w + (\alpha_w/2)]\}$$

$$B2_{floor\text{-}window\ absorbed} = (1 - \alpha)(FF_i)(\alpha_w/2)$$

where

i = particular surface the floor "sees"

ρ_w = $1 - \tau_r$, $\tau_r = 0.76$ from Table B6-1 (Section B6.1) for double glazing, where τ_r is taken at a 60 degree incidence angle to approximate properties of diffuse radiation

α_w = $1 - \tau_{abs}$, $\tau_{abs} = 0.86$ from Table B6-1 (Section B6.1) for double glazing, where τ_{abs} is taken at a 60 degree incidence angle to approximate properties of diffuse radiation

Use of $(\alpha_w/2)$ assumes half of the interior reflected radiation absorbed by the double-pane window is conducted back out to ambient; the other half remains as heat in the zone.

FF = view factor from Figures B7-1 and B7-2, which are equivalent to the equations below

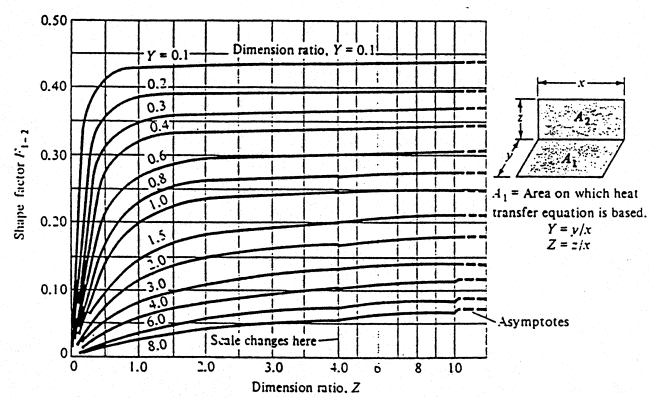

Figure B7-1 Shape factor for adjacent rectangles in perpendicular planes sharing a common edge [B-44].

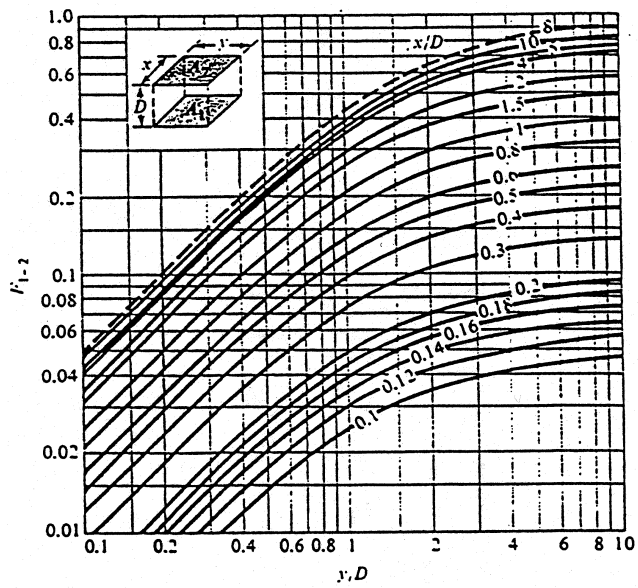

Figure B7-2 Shape factor for directly opposed rectangles [B-44].

(Reprinted by permission from *Principles of Heat Transfer,* Fifth Edition by Frank Kreith and Mark S. Bohn, Copyright 1993 by West Publishing Company. All Rights Reserved.)

Equation for Figure B7-1:

$$F_{1-2} = \frac{1}{\pi Y}\left(Y\tan^{-1}\left(\frac{1}{Y}\right) + Z\tan^{-1}\left(\frac{1}{Z}\right) - \sqrt{Z^2+Y^2}\tan^{-1}\left(\frac{1}{\sqrt{Z^2+Y^2}}\right) + \frac{1}{4}\ln\left\{\frac{(1+Y^2)(1+Z^2)}{(1+Y^2+Z^2)}\left[\frac{Y^2(1+Y^2+Z^2)}{(1+Y^2)(Y^2+Z^2)}\right]^{Y^2}\left[\frac{Z^2(1+Z^2+Y^2)}{(1+Z^2)(Z^2+Y^2)}\right]^{Z^2}\right\}\right)$$

where $Y = y/x$, $Z = z/x$ for x, y, and z as defined in Figure B7-1.

Copyrighted material licensed to Sei Ito on 2020-06-26 for licensee's use only. All rights reserved. No further reproduction or distribution is permitted. Distributed by Techstreet for ASHRAE, www.techstreet.com

Table B7-1 Interior Solar Distribution Fractions Versus Window Orientation and Interior Shortwave Absorptance

Surface	South Window Cases, α = 0.6	East/West Window Cases, α = 0.6	South Window Cases, α = 0.9	East/West Window Cases, α = 0.9	South Window Cases, α = 0.1	Sunspace Case
Floor	0.642	0.642	0.903	0.903	0.244	0.6
Ceiling	0.168	0.168	0.039	0.039	0.191	0.06
East wall	0.038	0.025	0.013	0.008	0.057	0.02
West wall	0.038	0.025	0.013	0.008	0.057	0.02
North wall	0.053	0.0525	0.018	0.018	0.082	0.2
South wall	0.026	0.0525	0.008	0.018	0.065	0.03
Solar lost through window	0.035	0.035	0.006	0.006	0.304	0.07

Note: Interior solar absorptance denoted as α.

The equation for Figure B7-2 is as follows:

$$F_{1-2} = \frac{2}{\pi XY}\left\{\begin{array}{c} \ln\left[\dfrac{(1+X^2)(1+Y^2)}{(1+X^2+Y^2)}\right]^{1/2} \\ + X\sqrt{1+Y^2}\tan^{-1}\left(\dfrac{X}{\sqrt{1+Y^2}}\right) \\ + Y\sqrt{1+X^2}\tan^{-1}\left(\dfrac{Y}{\sqrt{1+X^2}}\right) \\ - X\tan^{-1}X - Y\tan^{-1}Y \end{array}\right\}$$

where $X = x/D$, $Y = y/D$ for x, y, and D as defined in Figure B7-2.

B3 describes the third bounce such that the remaining nonabsorbed shortwave radiation is distributed over each surface in proportion to its area-absorptance product.

$$B3_{opaque\text{-}opaque} = [1 - \alpha - \Sigma(B2_n)](A_n/A_{total})(\alpha)$$

$$B3_{opaque\text{-}window\ lost} = [1 - \alpha - \Sigma(B2_n)](A_n/A_{total})\{1 - [\rho_w + (\alpha_w/2)]\}$$

$$B3_{opaque\text{-}window\ absorbed} = [1 - \alpha - \Sigma(B2_n)](A_n/A_{total})(\alpha_w/2)$$

BR describes the distribution of all remaining bounces based on distribution fractions from calculations for $B3_n$ above.

$$BR_n = [1 - \alpha - \Sigma(B2_n) - \Sigma(B3_n)][B3_n/\Sigma(B3_n)]$$

No transmitted solar radiation is assumed to be directly absorbed by the zone air at any time during this analysis.

Table B7-1 summarizes the interior solar distribution fractions for the various window configurations and interior surface absorptances that arise in the standard.

Fractional values for the walls with windows include the portion of the solar radiation absorbed by the glass (as it passes back out the window) conducted into the zone. Solar radiation absorbed by the glass (and conducted inward) as it initially passes into the building is treated separately by most programs in their window optical algorithms, so it is therefore not included in the values in Table B7-1.

In the cases with windows oriented east and west, solar fractions are assumed to be the same as for the south-oriented cases with similar interior solar absorptance, except that the fractions are adjusted in proportion to the change in the opaque areas of the east, west, and south walls caused by moving the windows.

For Case 960 (sunspace) solar loss was calculated using the same assumptions as for the south window orientation cases, with some adjustments because the sun zone south wall (containing the windows) and common wall are only 2 m apart. The tabulated values assume a solar fraction of 0.6 for the floor and 0.2 for the common wall. The remaining solar fractions were distributed in proportion to the area-absorptance products of the remaining surfaces. The solar-lost fraction was rounded to 0.07.

B7.1.1 A Note about Selected Results for Interior Solar Absorptance α = 0.9. The example results of Informative Annex B8 are drawn from *IEA BESTEST* [B-29]. The *IEA BESTEST* test specification contained a minor error in its approximate solar fractions table for interior α = 0.9. In the affected cases (270, 290, 300, 310, and 320), two of the sets of example results used the approximate solar fractions for inputs: SERIRES/SUNCODE 5.7 [B-24] and SERIRES 1.2 [B-45]. Results from the other programs are not affected, because they use various methods for automatically calculating interior solar distribution as discussed in *IEA BESTEST*, and DOE-2.1D [B-46] was not able to vary interior solar absorptance on exterior walls. We were able to correct the inputs for SERIRES/SUNCODE 5.7 and provide new example results for the standard; however, we were not able to adjust the SERIRES 1.2 results. Table B7-2 compares the current standard method of test (revised) and prior *IEA BESTEST* (erroneous) solar fractions; the value for solar lost did not change. The effect of changing the solar fractions is shown using SERIRES/SUNCODE 5.7 in Table B7-3; there is only a minor effect on heating and sensible cooling annual total loads and annual peak hourly loads.

B7.2 Solar Fraction Approximation Algorithm for Section 7.2 Test Cases. This section describes the method used to determine solar lost for Section 7.2 tests. The assumptions

Copyrighted material licensed to Sei Ito on 2020-06-26 for licensee's use only. All rights reserved. No further reproduction or distribution is permitted. Distributed by Techstreet for ASHRAE, www.techstreet.com

Table B7-2 Revision to Solar Fractions for Interior Solar Absorptance = 0.9

Surface	Current (Revised) Values		Previous IEA BESTEST (Erroneous Values)	
	South Window Cases	East/West Window Cases	South Window Cases	East/West Window Cases
Floor	0.903	0.903	0.651	0.651
Ceiling	0.039	0.039	0.177	0.177
East wall	0.013	0.008	0.041	0.027
West wall	0.013	0.008	0.041	0.027
North wall	0.018	0.018	0.056	0.056
South wall	0.008	0.018	0.028	0.056
Solar lost	0.006	0.006	0.006	0.006

Table B7-3 Sensitivity Test Results of Varying Solar Fractions Using SERIRES/SUNCODE 5.7

Case	Annual Heating, MWh/y	Annual Cooling, MWh/y	Peak Heating, kW	Peak Cooling, kW
270, using IEA BESTEST solar fractions	5.482	9.631	3.670	7.163
270A, using revised solar fractions	5.341	9.828	3.661	7.234
Delta	–0.141	0.197	–0.009	0.071
Delta %	–2.57%	2.05%	–0.25%	0.99%
270-220	–2.620	8.804	–0.025	5.823
270A-220	–2.761	9.001	–0.034	5.894
Delta	–0.141	0.197	–0.009	0.071
Delta %	5.38%	2.24%	36.00%	1.22%
300, using IEA BESTEST solar fractions	5.689	6.525	3.685	4.642
300A, using revised solar fractions	5.587	6.665	3.681	4.657
Delta	–0.102	0.14	–0.004	0.015
Delta %	–1.79%	2.15%	–0.11%	0.32%

here are useful for the calculation of solar lost but would result in different inside solar fractions for various opaque surfaces than the area weighting shown in Section 7.2 tables that contain solar fractions (e.g., Table 7-3). A spreadsheet tabulation of the calculation process is provided in Table B7-4. Note that interior walls have been excluded to simplify the calculation of solar lost.

Some equations described below differ from those of Section B7.1. For single-pane glazing, the solar-lost approximations are calculated from the following:

$$SF_n = B1_n + B2_n + B3_n + BR_n$$

where

n = a particular surface

SF = total solar fraction

B1 describes the first bounce of incident shortwave radiation, assuming all of it initially hits the floor.

$B1_{floor}$ = α

$B1_{all\ other}$ = 0

α = interior shortwave absorptance of opaque surfaces (all interior surfaces have the same absorptance except for the window which is denoted as α_w)

B2 describes the second "bounce" such that shortwave radiation diffusely reflected by the floor is distributed over other surfaces in proportion to their view-factor-absorptance product.

$$B2_{floor\text{-}floor} = 0$$

$$B2_{floor\text{-}other\ opaque} = (1 - \alpha)(FF_i)(\alpha)$$

$$B2_{floor\text{-}window\ lost} = (1 - \alpha)(FF_i)\{1 - [\rho_w + (N)(\alpha_w)]\}$$

$$B2_{floor\text{-}window\ absorbed} = (1 - \alpha)(FF_i)(N)(\alpha_w)$$

where FF are view factors from Figures B7-1 and B7-2 and accompanying equations for those figures given in Section B7.1.

i = particular surface which the floor "sees." View factors for windows are based on the view factor for the wall where the windows are located, multiplied by the fraction of the area of that wall occupied by the windows. View factors for walls with windows are adjusted similarly. To simplify calculation of solar lost, all windows are assumed located on the south wall (as in Case L150A).

Copyrighted material licensed to Sei Ito on 2020-06-26 for licensee's use only. All rights reserved. No further reproduction or distribution is permitted. Distributed by Techstreet for ASHRAE, www.techstreet.com

Table B7-4 Calculations of Solar Lost (Cavity Albedo) for Section 7.2 Tests

PROPERTIES			
Case	**L100A or L150A**	**L130A**	**P100A**
Alpha, walls	0.6	0.6	0.6
FF floor, N/S wall	0.09	0.09	0.09
FF floor, E/W wall	0.06	0.06	0.06
FF floor, ceiling	0.70	0.70	0.70
N_i	0.26	0.82	0.63
N_o		0.06	0.12
Hemis. inner pane alpha	0.098	0.041	0.076
Hemis. outer pane alpha		0.235	0.108
Hemispherical reflectance	0.136	0.391	0.205
FRACTION OF INCIDENT RADIATION ABSORBED			
1ST BOUNCE (B1)			
Floor	0.6000	0.6000	0.6000
2ND BOUNCE (B2)			
S. Window out	0.0131	0.0088	0.0138
S. Window in	0.0004	0.0007	0.0011
S. Wall	0.0123	0.0123	0.0080
N. Wall	0.0216	0.0216	0.0216
E. Wall	0.0144	0.0144	0.0144
W. Wall	0.0144	0.0144	0.0144
Ceiling	0.1680	0.1680	0.1680
Total	0.2441	0.2401	0.2413
3RD BOUNCE (B3)			
Opaque-opaque	0.0894	0.0916	0.0901
S. Window out	0.0058	0.0040	0.0063
S. Window in	0.0002	0.0003	0.0005
Total	0.0954	0.0960	0.0969
REMAINING BOUNCES (BR)			
Opaque-opaque	0.0567	0.0610	0.0575
S. Window out	0.0037	0.0027	0.0040
S. Window in	0.0001	0.0002	0.0003
Total	0.0605	0.0639	0.0618
Total solar fraction	1.0000	1.0000	1.0000
Total solar lost	**0.0226**	**0.0154**	**0.0240**

ABBREVIATIONS:
Alpha = interior shortwave absorptance; $FF_{a,b}$ = form factor from a to b
N = fraction of window absorbed solar radiation conducted inward
Hemis. = hemispherically integrated.

ASSUMPTIONS:
All solar radiation assumed to initially hit the floor, all south window configuration, interior walls ignored for this calculation, "solar to air" = 0.

Copyrighted material licensed to Sei Ito on 2020-06-26 for licensee's use only.
All rights reserved. No further reproduction or distribution is permitted. Distributed by Techstreet for ASHRAE, www.techstreet.com

ρ_w = reflectance for specific glazing, hemispherically integrated (diffuse radiation)

α_w = absorptance for specific glazing, hemispherically integrated (diffuse radiation)

N = inward conducted fraction of cavity reflected absorbed solar radiation. For single-pane glass, N is the ratio of the exterior film coefficient R-value to the total air-air center-of-glass R-value (for single-pane windows, this is the sum of the interior and exterior film coefficient R-values).

B3 describes the third bounce such that the remaining nonabsorbed shortwave radiation is distributed over each surface in proportion to its area-absorptance product. In this part and the final part of the calculation below, solar radiative exchange between opaque surfaces can be aggregated as shown in Table B7-4.

$$B3_{opaque\text{-}opaque} = [1 - \alpha - \Sigma(B2_n)](A_n/A_{total})(\alpha)$$

$$B3_{opaque\text{-}window\ lost} = [1 - \alpha - \Sigma(B2_n)](A_n/A_{total}) \{1 - [\rho_w + (N)(\alpha_w)]\}$$

$$B3_{opaque\text{-}window\ absorbed} = [1 - \alpha - \Sigma(B2_n)](A_n/A_{total})(N)(\alpha_w)$$

where

A_n = area of surface n

A_{total} = total area of all surfaces

BR describes the distribution of all remaining bounces based on distribution fractions from calculations for $B3_n$ above.

$$BR_n = [1 - \alpha - \Sigma(B2_n) - \Sigma(B3_n)][B3_n/\Sigma(B3_n)]$$

For double-pane glazing, the solar-lost calculation is the same as for single-pane glazing except for the following differences.

$$B2_{floor\text{-}window\ lost} = (1 - \alpha)(FF_i)[1 - (\rho_w + N_i\alpha_i + N_o\alpha_o)]$$

$$B2_{floor\text{-}window\ absorbed} = (1 - \alpha)(FF_i)(N_i\alpha_i + N_o\alpha_o)$$

$$B3_{opaque\text{-}window\ lost} = [1 - \alpha - \Sigma(B2_n)](A_n/A_{total}) [1 - (\rho_w + N_i\alpha_i + N_o\alpha_o)]$$

$$B3_{opaque\text{-}window\ absorbed} = [1 - \alpha - \Sigma(B2_n)](A_n/A_{total}) (N_i\alpha_i + N_o\alpha_o)$$

where

α_i = inner pane absorptance for specific glazing, hemispherically integrated (diffuse radiation)

N_i = inward conducted fraction of cavity reflected absorbed solar radiation for inner pane

α_o = outer pane absorptance for specific glazing, hemispherically integrated (diffuse radiation)

N_o = inward conducted fraction of cavity reflected absorbed solar radiation for outer pane

For double-pane glazing, N_i and N_o are the ratio of total R-value of the components on the exterior side of the pane in question to the total air-air center-of-glass R-value of the double-pane unit (including air gap between panes and interior and exterior film coefficients).

Copyrighted material licensed to Sei Ito on 2020-06-26 for licensee's use only. All rights reserved. No further reproduction or distribution is permitted. Distributed by Techstreet for ASHRAE, www.techstreet.com

(This annex is not part of the standard. It is merely informative and does not contain requirements necessary for conformance to the standard. It has not been processed according to the ANSI requirements for a standard and may contain material that has not been subject to public review or a consensus process. Unresolved objectors on informative material are not offered the right to appeal at ASHRAE or ANSI.)

NFORMATIVE ANNEX B8 EXAMPLE RESULTS FOR BUILDING THERMAL ENVELOPE AND FABRIC LOAD AND GROUND-COUPLED SLAB-ON-GRADE TESTS OF SECTION 5.2

Example results from various detailed building energy simulation programs that applied the tests of Section 5.2 are presented in tabular and graphic form in the electronic media provided with this standard; these also include the analytical solution and verified numerical model results for the ground-coupled slab-on-grade cases of Section 5.2.4. These results can be used for comparison with the software being tested. Alternatively, a user can run a number of different programs through this standard method of test or generate their own detailed numerical model results and, where applicable, draw comparisons from those results independently or in conjunction with the results listed here. In either case, when making comparisons, the user should employ the diagnostic logic presented in Informative Annex B9, Section B9.4.

For generating example simulation results presented in this annex, along with using consistent modeling methods, simulationists were requested to use the most detailed modeling methods their software allows, consistent with the level of detail provided in the test specifications. The building energy simulation computer programs used to generate example results are described in Informative Annex B11. These computer programs have been subjected to a number of analytical verification, empirical validation, and comparative testing studies. However, there is no such thing as a completely validated building energy simulation computer program. All building models are simplifications of reality. The philosophy here is to generate a range of results from several programs that are generally accepted as representing the state of the art in whole-building energy simulation programs. In the presented results, to the extent possible, input errors or differences have been eliminated. Thus, for a given case, the range of differences between results presented in Informative Annex B8 represents algorithmic differences among these computer programs for comparative envelope tests. For any given case, a tested program may fall outside of this range without necessarily being incorrect. However, it is worthwhile to investigate the source of substantial differences, as the collective experience of the authors of this standard is that such differences often indicate problems with the software or its use, including, but not limited to the following:

a. User input error, where the user misinterpreted or misentered one or more program inputs
b. Inadequate or faulty documentation
c. A problem with a particular algorithm in the program
d. One or more program algorithm used outside its intended range

Also, for any given case, a program that yields values in the middle of the range established by the example results should not be perceived as better or worse than a program that yields values at the borders of the range.

B8.1 Building Thermal Envelope and Fabric Load Tests of Sections 5.2.1, 5.2.2, and 5.2.3. Example results are included in the file RESULTS5-2A.PDF in the electronic media accompanying this standard. Nomenclature used in the tables and figures are defined in Section B8.1.1, and listings of the tables and figures are provided in Section B8.1.2.

For the convenience of users who wish to plot or tabulate their results along with the example results, the example results have been included with the file RESULTS5-2A.XLSX in the electronic media provided with this standard. Sections B8.1.1 and B8.1.2, nomenclature and formatted table and figure listings, respectively, apply to this file as well. Further documentation regarding RESULTS5-2A.XLSX has been included with the file and is printed in Informative Annex B10, Section B10.1, for convenience.

For a summary of how example results were developed, see Informative Annex B11, Section B11.1. For more detailed information about the example results, see *IEA BESTEST* [B-29].

B8.1.1 Nomenclature for RESULTS5-2A.PDF and RESULTS5-2A.XLSX. Abbreviations and acronyms used in the results tables and figures are defined below. Results are grouped by case numbers; e.g., "395" is Case 395 (Section 5.2.3.16). Sensitivity results are listed using two case numbers separated by a minus sign; e.g., "610 – 600" is the difference between Case 610 (Section 5.2.2.1.1) and Case 600 (Section 5.2.1).

Abs.	absorptance
ABS	absolute value
BEL-BRE	Belgium, Vrije Universiteit/United Kingdom, Building Research Establishment; modeler
BLAST	BLAST 3.0 level 193 v. 1 (see Table B11-1); simulation model
BRE	Building Research Establishment (see Table B11-1); modeler
Conv.	convection
DELTA	difference between listed cases (sensitivity)
DOE21D	DOE2.1D 14 (see Table B11-1); simulation model
DMU	De Montfort University, U.K. (see Table B11-1); modeler
E	east
Ext.	exterior
ESP	ESP-RV8 (see Table B11-1); simulation model
E&W	east and west windows

Copyrighted material licensed to Sei Ito on 2020-06-26 for licensee's use only. All rights reserved. No further reproduction or distribution is permitted. Distributed by Techstreet for ASHRAE, www.techstreet.com

H/C	heating and cooling
Hr	hour
Htg.	heating
Int.	interior
IR	infrared radiation
kW	kilowatt
kWh/m^2	kilowatt-hours per square metre
Max.	maximum
Min.	minimum
MWh	megawatt-hour
NREL	National Renewable Energy Laboratory; modeler
Op.	operable
Op.Win.	opaque window/high conductance wall
Orient.	orientation
S	south
S.SHADE	south overhang
S.WINDOW	south window
SERIRES	SERIRES 1.2 (see Table B11-1); simulation model
SETBACK	setback thermostat control strategy
Sol.	solar
SRES	SERIRES 1.2 (see Table B11-1); simulation model
SRES-SUN	SERIRES/SUNCODE 5.7 (see Table B11-1); simulation model
S3PAS	S3PAS (see Table B11-1); simulation model
Surf.	surface
TASE	TASE (see Table B11-1); simulation model
Temp.	temperature
TSYS	TRNSYS 13.1 (see Table B11-1); simulation model
US-IT	USA, National Renewable Energy Laboratory/Italy, Politecnico Torino; modeler
VENT	night ventilation control strategy
w/	with
W	west
WALL	no windows or opaque windows/high conductance walls
Win.	window
Y	year

B8.1.2 Listing of Tables and Figures. Tables B8-1 and B8-2 list example results tables and figures, respectively, included in the RESULTS5-2A.PDF and RESULTS5-2A.XLSX files. The RESULTS5-2A.PDF file presents these tables and figures sequentially. The "Sheet" and "Cell Range" columns are only applicable to the RESULTS5-2A.XLSX file.

B8.2 Ground-Coupled Slab-on-Grade Analytical Verification Tests of Section 5.2.4. Example results for the ground-coupled slab-on-grade tests of Section 5.2.4 are included with the file RESULTS5-2B.XLSX in the electronic media provided with this standard. Section B8.2.4 includes a list of tables and graphs within RESULTS5-2B.XLSX, along with navigation instructions. Complete documentation regarding RESULTS5-2B.XLSX is included in the file RESULTS5-2B.DOCX and is printed in Informative Annex B10, Section B10.2. For the convenience of users who wish to tabulate their results along with the example results, RESULTS5-2B.XLSX provides a method for incorporating user results. For a summary of how example results were developed, see Informative Annex B11, Section B11.2. More detailed information about the example results is included in the originating NREL/IEA research report [B-14].

B8.2.1 Importance of Analytical Solution and Verified Numerical Model Results. The ground-coupled slab-on-grade test cases of Section 5.2.4 use the results of verified numerical models for ground-coupled heat transfer as a secondary mathematical truth standard to which results from models typically used with whole-building energy simulation software can be compared. The logic of the cases may be summarized as follows:

a. Identify or develop exact analytical solutions that may be used as mathematical truth standards for testing detailed numerical models using parameters and simplifying assumptions of the analytical solution.
b. Apply a numerical solutions process that demonstrates convergence in the space and time domains for the analytical solution test cases and additional test cases where numerical models are applied.
c. Once validated against the analytical solutions, use the numerical models to develop reference results for test cases that progress toward more realistic (less idealized) conditions and that do not have exact analytical solutions.
d. Check the numerical models by carefully comparing their results to each other while developing the more realistic cases, and make corrections as needed.
e. Good agreement for the set of numerical models versus the analytical solution—and versus each other for subsequent test cases—verifies them as a secondary mathematical truth standard based on the range of disagreement among their results.
f. Use the verified numerical-model results as reference results for testing other models that have been incorporated into whole-building energy simulation computer programs.

This approach represents an important methodological advance to extend the analytical verification method beyond the constraints inherent in classical analytical solutions. It allows a secondary mathematical truth standard to be developed in the form of a set of stand-alone detailed numerical models. Once verified against all available classical analytical solutions and compared with each other for cases that do not have exact analytical solutions, the set of verified numerical models can be used together to test other models as imple-

Copyrighted material licensed to Sei Ito on 2020-06-26 for licensee's use only. All rights reserved. No further reproduction or distribution is permitted. Distributed by Techstreet for ASHRAE, www.techstreet.com

Table B8-1 B8.1.2 RESULTS5-2A.XLSX Tables

Table	Description	Sheet	Cell Range
Table B8-1	Annual Heating Loads	Tables 1	B7–P47
Table B8-2	Annual Sensible Cooling Loads		B48–P89
Table B8-3	Annual Hourly Integrated Peak Heating Loads	Tables 2	B7–AH47
Table B8-4	Annual Hourly Integrated Peak Sensible Cooling Loads		B48–AH88
Table B8-5	Free-Float Temperature Output		B89–AH118
Table B8-6	Low-Mass Basic Sensitivity Tests	Tables 3	B7–P39
Table B8-7	High-Mass Basic Sensitivity Tests		B41–P81
Table B8-8	Low-Mass In-Depth (Cases 195 through 320) Sensitivity Tests	Tables 4	B7–P78
Table B8-9	Low-Mass In-Depth (Cases 395 through 440) Sensitivity Tests	Tables 5	B7–P45
Table B8-10	High-Mass Basic and In-Depth Sensitivity Tests		B47–P91
Table B8-11	Annual Transmissivity Coefficient of Windows	Tables 6	B7–O14
Table B8-12	Annual Shading Coefficient of Window Shading Devices: Overhangs and Fins		B16–O23
Table B8-13	Case 600 Annual Incident Solar Radiation (kWh/m^2)		B25–O34
Table B8-14	Case 600 Annual Transmitted Solar Radiation—Unshaded (kWh/m^2)		B36–O42
Table B8-15	Case 600 Annual Transmitted Solar Radiation—Shaded (kWh/m^2)		B44–O50

mented in whole-building simulation programs. This allows for greater diagnostic capability than the purely comparative method, and it allows somewhat more realistic boundary conditions to be used in the test cases than are possible with pure analytical solutions.

A characteristic difference between the Section B8.1 results for the building thermal envelope and fabric load tests of Sections 5.2.1, 5.2.2, and 5.2.3 versus the Section B8.2 results for the ground-coupled slab-on-grade tests of Section 5.2.4 is that the results of Section B8.2 include verified numerical model results (as described above) and an analytical solution result. In general, it is difficult to develop worthwhile test cases that can be solved analytically, but such solutions are extremely useful when possible. Analytical solutions represent a mathematical truth standard; that is, given the underlying physical assumptions in the case definitions, there is a mathematically correct solution for each case. The analytical solution and verified numerical model results presented for the ground-coupled slab-on-grade cases represent mathematical and secondary mathematical truth standards, respectively. This allows identification of bugs in the software that would not otherwise be apparent from comparing software only to other software, and therefore improves the diagnostic capabilities of the test procedure.

It is important to understand the difference between a mathematical truth standard or secondary mathematical truth standard and an absolute truth standard. In the former, we only test the solution process for a model, not the appropriateness of the solution; that is, we accept the given underlying physical assumptions while recognizing that these assumptions represent a simplification of physical reality. An approximate truth standard from an experiment tests both the solution process and appropriateness of the model within experimental uncertainty. The ultimate or "absolute" validation truth standard would be comparison of simulation results with a perfectly performed empirical experiment, with all simulation inputs perfectly defined. In reality, an experiment is performed and the experimental object is specified within some acceptable range of uncertainty. Such experiments are possible but expensive. We recommend developing a set of empirical validation experiments in the future.

Further discussion of how the analytical solution was applied and developed is included, respectively, in Section B11.2.1 and the preceding developmental work by Commonwealth Scientific and Industrial Research Organization (CSIRO) [B-9]. Further discussion of how the verified numerical model results were developed is included in Informative Annex B11, Section B11.2.2 of this standard, and Part II, Section 2.9 (Appendices II-A, II-B, and II-C) of the originating NREL/IEA report [B-14].

B8.2.2 Example Simulation Results. The simulation programs used to generate example results for the ground-coupled slab-on-grade tests of Section 5.2.4 are described in Informative Annex B11, Section B11.2.2.

B8.2.2.1 Purpose of Including Example Simulation Results with Analytical Verification Tests. Because the analytical solution and verified numerical model results constitute a reliable set of theoretical results (mathematical and secondary mathematical truth standards, respectively), the primary purpose of including simulation results for the ground-coupled slab-on-grade cases is to allow simulationists to compare their relative agreement (or disagreement) versus the analytical solution and verified numerical model results to that for other simulation results. Perfect agreement among simulations and the analytical solution or verified numerical model results is not necessarily expected. The results give an indication of what sort of agreement is possible between simulation results and the analytical solution or verified numerical model results. Because the physical assumptions of a simulation may be different from those of the analytical solu-

Copyrighted material licensed to Sei Ito on 2020-06-26 for licensee's use only. All rights reserved. No further reproduction or distribution is permitted. Distributed by Techstreet for ASHRAE, www.techstreet.com

Table B8-2 B8.1.2 RESULTS5-2A.XLSX Figures

Figure	Title	Sheet Tab
B8-1	BESTEST BASIC Annual Incident Solar Radiation	Fig. B8-1 Ann Incident Solar
B8-2	BESTEST BASIC Annual Transmitted Solar Radiation Unshaded	Fig. B8-2 Ann SolRad Unshaded
B8-3	BESTEST BASIC Annual Transmitted Solar Radiation Shaded	Fig. B8-3 Ann SolRad Shaded
B8-4	BESTEST BASIC Annual Transmissivity Coefficient of Windows (Unshaded Transmitted)/(Incident Solar Radiation)	Fig. B8-4 Trans Coeff
B8-5	BESTEST BASIC Annual Overhang and Fin Shading Coefficients (1-(Shaded)/(Unshaded)) Transmitted Solar Radiation	Fig. B8-5 OH&Fin Shade Coeff
B8-6	BESTEST BASIC Low Mass Annual Heating	Fig. B8-6 Lomass Ann Heat
B8-7	BESTEST BASIC Low Mass Annual Sensible Cooling	Fig. B8-7 Lomass Ann Cool
B8-8	BESTEST BASIC Low Mass Peak Heating	Fig. B8-8 Lomass Peak Heat
B8-9	BESTEST BASIC Low Mass Peak Sensible Cooling	Fig. B8-9 Lomass Peak Cool
B8-10	BESTEST BASIC High Mass Annual Heating	Fig. B8-10 Himass Ann Heat
B8-11	BESTEST BASIC High Mass Annual Sensible Cooling	Fig. B8-11 Himass Ann Cool
B8-12	BESTEST BASIC High Mass Peak Heating	Fig. B8-12 Himasss Peak Heat
B8-13	BESTEST BASIC High Mass Peak Sensible Cooling	Fig. B8-13 Himass Peak Cool
B8-14	BESTEST BASIC Maximum Hourly Annual Temperature Free-Float Cases	Fig. B8-14 FF Maximum Temp
B8-15	BESTEST BASIC Minimum Hourly Annual Temperature Free-Float Cases	Fig. B8-15 FF Minimum Temp
B8-16	BESTEST BASIC Average Hourly Annual Temperature Free-Float Cases	Fig. B8-16 FF Average Temp
B8-17	BESTEST BASIC South Window Shading (Delta) Annual Heating and Sensible Cooling	Fig. B8-17 Delta-S Shade-Load
B8-18	BESTEST BASIC South Window Shading (Delta) Peak Heating and Sensible Cooling	Fig. B8-18 Delta-S Shade-Peak
B8-19	BESTEST BASIC East & West Window (Delta) Annual Heating and Sensible Cooling	Fig. B8-19 Delta-E&W-Load
B8-20	BESTEST BASIC East & West Window (Delta) Peak Heating and Sensible Cooling	Fig. B8-20 Delta-E&W-Peak
B8-21	BESTEST BASIC East & West Shaded Window (Delta) Annual Heating and Sensible Cooling	Fig. B8-21 Delta-E&WShade-Load
B8-22	BESTEST BASIC East & West Shaded Window (Delta) Peak Heating and Sensible Cooling	Fig. B8-22 Delta-E&WShade-Peak
B8-23	BESTEST BASIC Thermostat Setback (Delta) Annual Heating	Fig. B8-23 Delta-TSetback-Heat
B8-24	BESTEST BASIC Thermostat Setback (Delta) Peak Heating	Fig. B8-24 Delta-TSetback-Peak
B8-25	BESTEST BASIC Vent Cooling (Delta) Annual Sensible Cooling	Fig. B8-25 Delta-VentCool-Load
B8-26	BESTEST BASIC Vent Cooling (Delta) Peak Sensible Cooling	Fig. B8-26 Delta-VentCool-Peak
B8-27	BESTEST BASIC Sunspace (Delta) Annual Heating and Sensible Cooling	Fig. B8-27 Delta-Sunspace-Load
B8-28	BESTEST BASIC Sunspace (Delta) Peak Heating and Sensible Cooling	Fig. B8-28 Delta-Sunspace-Peak
B8-29	BESTEST BASIC AND IN-DEPTH Mass Effect (Delta) Annual Heating and Sensible Cooling	Fig. B8-29 Delta-Mass Effect-Ann
B8-30	BESTEST BASIC AND IN-DEPTH Mass Effect (Delta) Peak Heating and Sensible Cooling	Fig. B8-30 Delta-Mass Effect-Pk
B8-31	BESTEST IN-DEPTH South Window (Delta) Annual Heating and Sensible Cooling	Fig. B8-31 Delta-S Win-Ann
B8-32	BESTEST IN-DEPTH South Window (Delta) Peak Heating and Sensible Cooling	Fig. B8-32 Delta-S Win-Peak
B8-33	BESTEST IN-DEPTH Low Mass Annual Heating Cases 195 to 250	Fig. B8-33 Indepth 1
B8-34	BESTEST IN-DEPTH Low Mass Annual Sensible Cooling Cases 195 to 250	Fig. B8-34 Indepth 2
B8-35	BESTEST IN-DEPTH Low Mass Peak Heating Cases 195 to 250	Fig. B8-35 Indepth 3
B8-36	BESTEST IN-DEPTH Low Mass Peak Sensible Cooling Cases 195 to 250	Fig. B8-36 Indepth 4
B8-37	BESTEST IN-DEPTH Low Mass Annual Heating Cases 270 to 320	Fig. B8-37 Indepth 5
B8-38	BESTEST IN-DEPTH Low Mass Annual Sensible Cooling Cases 270 to 320	Fig. B8-38 Indepth 6
B8-39	BESTEST IN-DEPTH Low Mass Peak Heating Cases 270 to 320	Fig. B8-39 Indepth 7
B8-40	BESTEST IN-DEPTH Low Mass Peak Sensible Cooling Cases 270 to 320	Fig. B8-40 Indepth 8
B8-41	BESTEST IN-DEPTH Cases 195 to 220 (Delta) Annual Heating and Sensible Cooling	Fig. B8-41 Indepth Delta 1
B8-42	BESTEST IN-DEPTH Cases 195 to 220 (Delta) Peak Heating and Sensible Cooling	Fig. B8-42 Indepth Delta 2
B8-43	BESTEST IN-DEPTH Cases 220 to 270 (Delta) Annual Heating and Sensible Cooling	Fig. B8-43 Indepth Delta 3

Copyrighted material licensed to Sei Ito on 2020-06-26 for licensee's use only. All rights reserved. No further reproduction or distribution is permitted. Distributed by Techstreet for ASHRAE, www.techstreet.com

Table B8-2 B8.1.2 RESULTS5-2A.XLSX Figures *(Continued)*

Figure	Title	Sheet Tab
B8-44	BESTEST IN-DEPTH Cases 220 to 270 (Delta) Peak Heating and Sensible Cooling	Fig. B8-44 Indepth Delta 4
B8-45	BESTEST IN-DEPTH Cases 270 to 320 (Delta) Annual Heating and Sensible Cooling	Fig. B8-45 Indepth Delta 5
B8-46	BESTEST IN-DEPTH Cases 270 to 320 (Delta) Peak Sensible Cooling	Fig. B8-46 Indepth Delta 6
B8-47	BESTEST IN-DEPTH Annual Heating Cases 395 to 440, 800, 810	Fig. B8-47 Indepth 9
B8-48	BESTEST IN-DEPTH Annual Sensible Cooling Cases 395 to 440, 800, 810	Fig. B8-48 Indepth 10
B8-49	BESTEST IN-DEPTH Peak Heating Cases 395 to 440, 800, 810	Fig. B8-49 Indepth 11
B8-50	BESTEST IN-DEPTH Peak Sensible Cooling Cases 395 to 440, 800, 810	Fig. B8-50 Indepth 12
B8-51	BESTEST IN-DEPTH Cases 395 to 600 (Delta) Annual Heating and Sensible Cooling	Fig. B8-51 Indepth Delta 7
B8-52	BESTEST IN-DEPTH Cases 395 to 600 (Delta) Peak Heating and Sensible Cooling	Fig. B8-52 Indepth Delta 8
B8-53	BESTEST Case 900FF Annual Hourly Temperature Frequency	Fig. B8-53 Hrly-Temp Freq
B8-54	BESTEST Case 600 Cloudy & Clear Day Hourly Incident Solar South Facing Surface	Fig. B8-54 Hrly-IncidentSol-S
B8-55	BESTEST Case 600 Cloudy & Clear Day Hourly Incident Solar West Facing Surface	Fig. B8-55 Hrly-IncidentSol-W
B8-56	BESTEST HOURLY FREE FLOAT TEMPERATURES Clear Cold Day—Cases 600FF and 900FF	Fig. B8-56 Hrly-FF Temp-ColdDay
B8-57	BESTEST HOURLY FREE FLOAT TEMPERATURES Clear Hot Day—Cases 650FF and 950FF	Fig. B8-57 Hrly-FF Temp-HotDay
B8-58	BESTEST HOURLY LOADS Clear Cold Day, Case 600 Heating (+), Sensible Cooling (–)	Fig. B8-58 Hrly-Loads-Case600
B8-59	BESTEST HOURLY LOADS Clear Cold Day, Case 900 Heating (+), Sensible Cooling (–)	Fig. B8-59 Hrly-Loads-Case900

tion or verified numerical model results, a tested program may disagree with such solutions without necessarily being incorrect. However, it is worthwhile to investigate the sources of the differences.

B8.2.2.2 Zone Heating Load versus Floor Conduction Results. Heat conducted through the floor slab should be equal to the zone heating load because the test cases specify adiabatic above-grade walls and ceiling such that heating zone air to maintain the thermostat set point drives all heat losses through the floor. The verified numerical models were run independently of whole-building energy simulation models. For the "b"-series and "c"-series cases, the zone air temperature was input to verified numerical models as an inside boundary condition for an interior convective surface coefficient (thermal resistance between the zone air and floor slab surface). Therefore, verified numerical-model results are included with the floor conduction results only. However, for whole-building simulation programs that do not disaggregate floor conduction in their output, the zone heating load results are directly comparable to the floor conduction results. Minor differences in zone heating load versus floor conduction may occur if a simulation program cannot model strictly adiabatic above-grade walls and ceilings but rather is applying the lowest thermal conductance the simulation allows.

B8.2.3 Nomenclature for RESULTS5-2B.xlsx. Results are shown using case designators; e.g., "GC30b" is Case GC30b (see Section 5.2.4.1.1). Sensitivity results are listed using two case numbers separated by a minus sign; e.g., "GC60b – GC30b" is the difference between Case GC60b (see Section 5.2.4.1.6) and Case GC30b (see Section 5.2.4.1.1).

ABS = absolute value

adiab. = adiabatic

AR = aspect ratio

BASECALC = BASECALC V1.0e (see Table B11-4); simulation model

BESTEST = Building Energy Simulation Test and Diagnostic Method

CSIRO = Commonwealth Scientific and Industrial Research Organisation, Australia (see Table B11-4)

Delta = results difference

Dif. = difference

DIT = Dublin Institute of Technology, Ireland (see Table B11-4); modeler

DT = differential temperature

E = deep-ground depth (Section 5.2.4 only)

EnergyPlus = EnergyPlus 2.0.0.025 (see Table B11-4); simulation model

ESP-r/BASESIMP = ESP-r/BASESIMP (see Table B11-4); simulation model

F = far-field dimension, m

FLUENT = by PAAET using Fluent 6.0.20 (see Table B11-4); verified numerical model

GARD = GARD Analytics, United States (see Table B11-4); modeler

GHT = GHT (see Table B11-4); simulation model

h = convective surface coefficient, $W/m^2 \cdot K$

h,int = interior convective surface coefficient, $W/m^2 \cdot K$

Copyrighted material licensed to Sei Ito on 2020-06-26 for licensee's use only. All rights reserved. No further reproduction or distribution is permitted. Distributed by Techstreet for ASHRAE, www.techstreet.com

Table B8-3 B8.2.4 Example Results Tables

Table	Description	Sheet Tab	Cell Range
Table B8.2-1	"a"-Series Case Summary, Numerical Model Verification	Tables 1	B7–L24
Table B8.2-2	Steady-State Conduction	Tables 2	B7–Q26
Table B8.2-3	Steady-State Supporting Information	Tables 2	B29–Q42
Table B8.2-4	Steady-Periodic Last-Simulation-Year Conduction	Tables 2	B46–Q83
Table B8.2-5	Steady-Periodic Last-Simulation-Year Peak-Hour Conduction	Tables 3	B7–AA62
Table B8.2-6	Time from Coldest Hour (Jan 15, Hour 4) to Peak Conduction Occurrence	Tables 4	B7–Q33
Table B8.2-7	Steady-Periodic Supporting Information	Tables 4	B35–Q60
Table B8.2-8	Steady-Periodic Minimum ODB and Time of Occurrence	Tables 5	B8–AE38
Table B8.2-9	Delta Steady-State Conduction	Tables 6	B7–Q30
Table B8.2-10	Delta Steady-Periodic Annual Total Conduction	Tables 6	B32–Q56
Table B8.2-11	Delta Steady-Periodic Last-Year Peak Hour Floor Conduction	Tables 6	B58–Q82
Table B8.2-12	Delta Steady-Periodic Conduction v Coldest Hour Phase Shift	Tables 6	B84–Q108

h,ext = exterior convective surface coefficient, W/m^2·K

Htg. = heating

inf. = infinity

ISO = International Organization for Standardization

k = thermal conductivity, W/m^2·K

kWh = kilowatt-hour

Large slab/10 = large slab results divided by 10

LinDt = linearly varying perimeter boundary surface temperature (see Case GC10a, Section 5.2.4.2.1)

low h = low interior and exterior surface coefficients

MATLAB = by DIT using MATLAB 7.0.4.365 (R14) (see Table B11-4); verified numerical model

Max. = maximum of example results

Mean = mean of example results

Min. = minimum of example results

NRCan = Natural Resources Canada

NREL = National Renewable Energy Laboratory (see Table B11-4); modeler

ODB = outdoor dry-bulb temperature, °C

PAAET = Public Authority of Applied Education and Training, Kuwait (see Table B11-4); modeler

sp = steady periodic—test case using harmonically varying outdoor dry-bulb temperature

ss = steady state—test case using constant outdoor dry-bulb temperature

SUNREL-GC = SUNREL-GC 1.14.01 (see Table B11-4); simulation model

TESS = Thermal Energy System Specialists, United States (see Table B11-4); modeler

Tot. = total

TRNSYS = TRNSYS 16.1 (see Table B11-4); verified numerical model

v. = versus

VA114/ISO-13370 = VA114 using ISO-13370 ground heat transfer calculation (see Table B11-4); simulation model

VABI = VABI Software, Netherlands (see Table B11-4); modeler

W = watts

Wh/h = watt-hour per hour

X = variable dimension along x-axis, cm (see Figure 6-1 and Table 6-2)

Y = variable dimension along y-axis, cm (see Figure 6-1 and Table 6-2)

B8.2.4 Example Results. Tables B8-3 and B8-4 list example results tables and figures included in the RESULTS5-2B.PDF and RESULTS5-2B.XLSX files. The RESULTS5-2B.PDF file represents these tables and figures sequentially. The sheet and cell range columns are only applicable to the RESULTS5-2B.XLSX file. Verified numerical-model results are shown in the bar charts with blue shaded background bars, and the analytical solution result (Case GC10a) is shown with a magenta background bar.

Copyrighted material licensed to Sei Ito on 2020-06-26 for licensee's use only. All rights reserved. No further reproduction or distribution is permitted. Distributed by Techstreet for ASHRAE, www.techstreet.com

Table B8-4 B8.2.4 Example Results Figures

Figure	Title	Sheet Tab
B8.2-1	IEA BESTEST Ground Coupling: In-Depth Floor Slab Steady-State Floor Conduction	Figure B8.2-1 QFSS
B8.2-2	IEA BESTEST Ground Coupling: In-Depth Floor Slab Steady-State Floor Conduction Sensitivity	Figure B8.2-2 dQFSS
B8.2-3	IEA BESTEST Ground Coupling: In-Depth Floor Slab Steady-State Zone Heating Load	Figure B8.2-3 QZSS
B8.2-4	IEA BESTEST Ground Coupling: In-Depth Floor Slab Steady-State Zone Heating Load Sensitivity	Figure B8.2-4 dQZSS
B8.2-5	IEA BESTEST Ground Coupling: In-Depth Floor Slab Steady-State (Zone Heating Load) – (Floor Conduction)	Figure B8.2-5 QZ-FSS
B8.2-6	IEA BESTEST Ground Coupling: In-Depth Floor Slab Case GC10a Modeling Parameters	Figure B8.2-6 GC10Par
B8.2-7	IEA BESTEST Ground Coupling: In-Depth Floor Slab Steady-State Zone Temperature	Figure B8.2-7 TZSS
B8.2-8	IEA BESTEST Ground Coupling: In-Depth Floor Slab, GC10a Steady-State Surface Temperatures ($Y = 0$, thru edge center)	Figure B8.2-8 TempGC10a-Surf
B8.2-9	IEA BESTEST Ground Coupling: In-Depth Floor Slab, GC10a Steady-State Surface Temperatures ($Y = X$, thru corner)	Figure B8.2-9 TempGC10a-Surf-diag
B8.2-10	IEA BESTEST Ground Coupling: In-Depth Floor Slab, GC10a, GC30a Steady-State Near-Surface Temperatures (Y = 0, thru center of edge)	Figure B8.2-10 TempGC10a-30a
B8.2-11	IEA BESTEST Ground Coupling: In-Depth Floor Slab, GC10a, GC30a Steady-State Near-Surface Temperatures (Y = X, thru corner)	Figure B8.2-11 TempGC10a-30a-diag
B8.2-12	IEA BESTEST: In-Depth Floor Slab, GC30b, GC60b, GC65b Steady-State Near-Surface Temperatures (Y = 0, thru center of edge)	Figure B8.2-12 TempGC30b-65b
B8.2-13	IEA BESTEST: In-Depth Floor Slab, GC30b, GC60b, GC65b Steady-State Near-Surface Temperatures (Y = X, thru corner)	Figure B8.2-13 TempGC30b-65b-diag
B8.2-14	IEA BESTEST Ground Coupling: In-Depth Floor Slab Steady-Periodic Annual Floor Conduction	Figure B8.2-14 QFSP
B8.2-15	IEA BESTEST Ground Coupling: In-Depth Floor Slab Steady-Periodic Annual Floor Conduction Sensitivity	Figure B8.2-15 dQFSP
B8.2-16	IEA BESTEST Ground Coupling: In-Depth Floor Slab Steady-Periodic Annual Zone Heating Load	Figure B8.2-16 QZSP
B8.2-17	IEA BESTEST Ground Coupling: In-Depth Floor Slab Steady-Periodic Annual Zone Heating Load Sensitivity	Figure B8.2-17 dQZSP
B8.2-18	IEA BESTEST Ground Coupling: In-Depth Floor Slab Steady-Periodic (Zone Heating Load) – (Floor Conduction)	Figure B8.2-18 QZ-FSP
B8.2-19	IEA BESTEST Ground Coupling: In-Depth Floor Slab Hourly Floor Conduction, GC40a	Figure B8.2-19 GC40aHourly-1
B8.2-20	IEA BESTEST Ground Coupling: In-Depth Floor Slab Hourly Floor Conduction, GC40b	Figure B8.2-20 GC40bHourly-2
B8.2-21	IEA BESTEST Ground Coupling: In-Depth Floor Slab Hourly Floor Conduction, GC40c	Figure B8.2-21 GC40cHourly-1
B8.2-22	IEA BESTEST Ground Coupling: In-Depth Floor Slab Steady-Periodic Phase Shift, Time from Coldest ODB to Peak Floor Conduction	Figure B8.2-22 PhF
B8.2-23	IEA BESTEST Ground Coupling: In-Depth Floor Slab Steady-Periodic Phase Shift Sensitivity, Floor Conduction v. ODB	Figure B8.2-23 dPhF
B8.2-24	IEA BESTEST Ground Coupling: In-Depth Floor Slab Steady-Periodic Phase Shift, Time from Coldest ODB to Peak Zone Load	Figure B8.2-24 PhZ
B8.2-25	IEA BESTEST Ground Coupling: In-Depth Floor Slab Delta Steady-Periodic Phase Shift Sensitivity, Zone Load v. ODB	Figure B8.2-25 dPhZ
B8.2-26	IEA BESTEST Ground Coupling: In-Depth Floor Slab Steady-Periodic Annual Peak-Hour Floor Conduction	Figure B8.2-26 PFSP
B8.2-27	IEA BESTEST Ground Coupling: In-Depth Floor Slab Steady-Periodic Annual Peak-Hour Floor Conduction Sensitivity	Figure B8.2-27 dPFSP
B8.2-28	IEA BESTEST Ground Coupling: In-Depth Floor Slab Steady-Periodic Annual Peak-Hour Zone Heating Load	Figure B8.2-28 PZSP

Copyrighted material licensed to Sei Ito on 2020-06-26 for licensee's use only. All rights reserved. No further reproduction or distribution is permitted. Distributed by Techstreet for ASHRAE, www.techstreet.com

Table B8-4 B8.2.4 Example Results Figures *(Continued)*

Figure	Title	Sheet Tab
B8.2-29	IEA BESTEST Ground Coupling: In-Depth Floor Slab Steady-Periodic Annual Peak-Hour Zone Heating Load Sensitivity	Figure B8.2-29 dPZSP
B8.2-30	IEA BESTEST Ground Coupling: In-Depth Floor Slab Steady-Periodic (Peak Zone Heating Load) – (Peak Floor Conduction)	Figure B8.2-30 PZ-FSP
B8.2-31	IEA BESTEST Ground Coupling: In-Depth Floor Slab Steady-Periodic Zone Temperature	Figure B8.2-31 TZSP
B8.2-32	IEA BESTEST Ground Coupling: In-Depth Floor Slab Steady-Periodic Minimum ODB	Figure B8.2-32 ODBmin

Copyrighted material licensed to Sei Ito on 2020-06-26 for licensee's use only.
All rights reserved. No further reproduction or distribution is permitted. Distributed by Techstreet for ASHRAE, www.techstreet.com

(This annex is not part of the standard. It is merely informative and does not contain requirements necessary for conformance to the standard. It has not been processed according to the ANSI requirements for a standard and may contain material that has not been subject to public review or a consensus process. Unresolved objectors on informative material are not offered the right to appeal at ASHRAE or ANSI.)

INFORMATIVE ANNEX B9 DIAGNOSING THE RESULTS USING THE FLOW DIAGRAMS

B9.1 General Description. Figures B9-1 through B9-10 contain a set of flow diagrams that serve as a guide for diagnosing the cause of disagreeing results that may arise from using this method of test. These flow diagrams list the features being tested, thus indicating potential sources of algorithmic differences.

B9.2 Comparing Tested Software Results to Other Example Results

B9.2.1 Example results are either results presented in Informative Annexes B8 and B16 or other results that were generated using this standard method of test.

B9.2.2 In this annex we provide no formal criteria for when results agree or disagree. Determination of when results agree or disagree is left to the user. In making this determination, the user should consider the following:

a. Magnitude of results for individual cases.
b. Magnitude of difference in results between certain cases (e.g., "Case 610 – Case 600").
c. Same direction of sensitivity (positive or negative) for difference in results between certain cases (e.g., "Case 610 – Case 600").
d. If results are logically counterintuitive with respect to known or expected physical behavior.
e. Availability of analytical solution, quasi-analytical solution, or verified numerical model results (i.e., mathematical or secondary mathematical truth standards as described in Informative Annex B16, Section B16.2, and Informative Annex B8, Section B8.2.1).
f. For the analytical verification test cases, the degree of disagreement that occurred for other simulation results versus the analytical solution, quasi-analytical solution, or verified numerical model results.
g. Example simulation results do not represent a truth standard.

B9.2.3 Check the program being tested for agreement (see Section B9.2.2) with example results for both the absolute outputs and the sensitivity (or delta) outputs. For example, when comparing to the example results shown in Informative Annex B8 for Case "610 – 600" in the "low mass basic" flow diagram (Figure B9-1), the program results are compared with both the Case 610 example results and the Case 610 – 600 example sensitivity results.

B9.2.4 Compare all available output types specified for each case that can be produced by the program being tested, as described in Section 6. A disagreement with any one of the output types may be cause for concern.

B9.2.5 There are some cases where it is possible to proceed even if disagreements were uncovered in the previous case. For example, using Figure B9-1, in Case 610, inability to model a shading overhang would not affect the usefulness of the program for modeling buildings with unshaded windows. Thus, the flow diagram has an extra arrow connecting Cases 610 and 620, which denotes that you may proceed regardless of the results for Case 610. Where cases are connected by a single arrow, a satisfactory result is required in order to proceed to the next case. For example, in Case 620, the inability to model transmitted radiation through an unshaded east window makes it difficult to proceed with these tests until the disagreement is reconciled.

B9.3 If Tested Software Results Disagree with Example Results. If the tested program shows disagreement (as defined above in Section B9.2.2) with the example results, then recheck the inputs against the specified values. Use the diagnostic logic flow diagrams to help isolate the source of the difference. If no input error can be found, then look for an error in the software. If an error is found, then fix it and rerun the tests. If, in the engineering judgment of the user, the disagreement is caused by a reasonable difference in algorithms between the tested software and the example results or other tested software, then continue with the next test case.

B9.4 Diagnostic Logic Flow Diagrams for Building Thermal Envelope and Fabric Load and Ground-Coupled Slab-on-Grade Tests (Section 5.2)

B9.4.1 Low-Mass and High-Mass Basic Tests. The first flow diagram (Figure B9-1) begins with the base building (Case 600). It is very important to have confidence in your Case 600 results before proceeding to the other cases. If output from the tested program agrees satisfactorily with other example results for Case 600, check other output according to the flow diagram. Once the low-mass basic cases have been checked, proceed with the high-mass basic (900 series) cases (Figure B9-3).

B9.4.2 In-Depth Tests. These tests provide detailed diagnostic capability. The "in-depth test" flow diagram (Figure B9-2) indicates two possible diagnostic paths, A1 through A11 or B1 through B10. Selecting Path A versus Path B depends on the capabilities of the program being tested. Path A is the preferable diagnostic path. Use Path A if the software being tested is literal enough in its treatment of building physics to allow input of those cases. Otherwise, Path B will still help to identify algorithmic sources of differences but less definitively because of interacting effects.

B9.4.3 Mass Interaction Tests. Further diagnostic information can be obtained regarding thermal mass interactions using the diagnostic logic flow diagram of Figure B9-4. When disagreement among results occurs, this diagram sometimes returns to the low-mass, in-depth diagnostics (Figure B9-2) even though the program may have already showed agreement in the low-mass basic tests. The reason for this is that the high-mass cases may reveal disagreements that the low-mass cases did not expose because of the following:

a. The disagreement is more readily detectable when mass is present.

Copyrighted material licensed to Sei Ito on 2020-06-26 for licensee's use only. All rights reserved. No further reproduction or distribution is permitted. Distributed by Techstreet for ASHRAE, www.techstreet.com

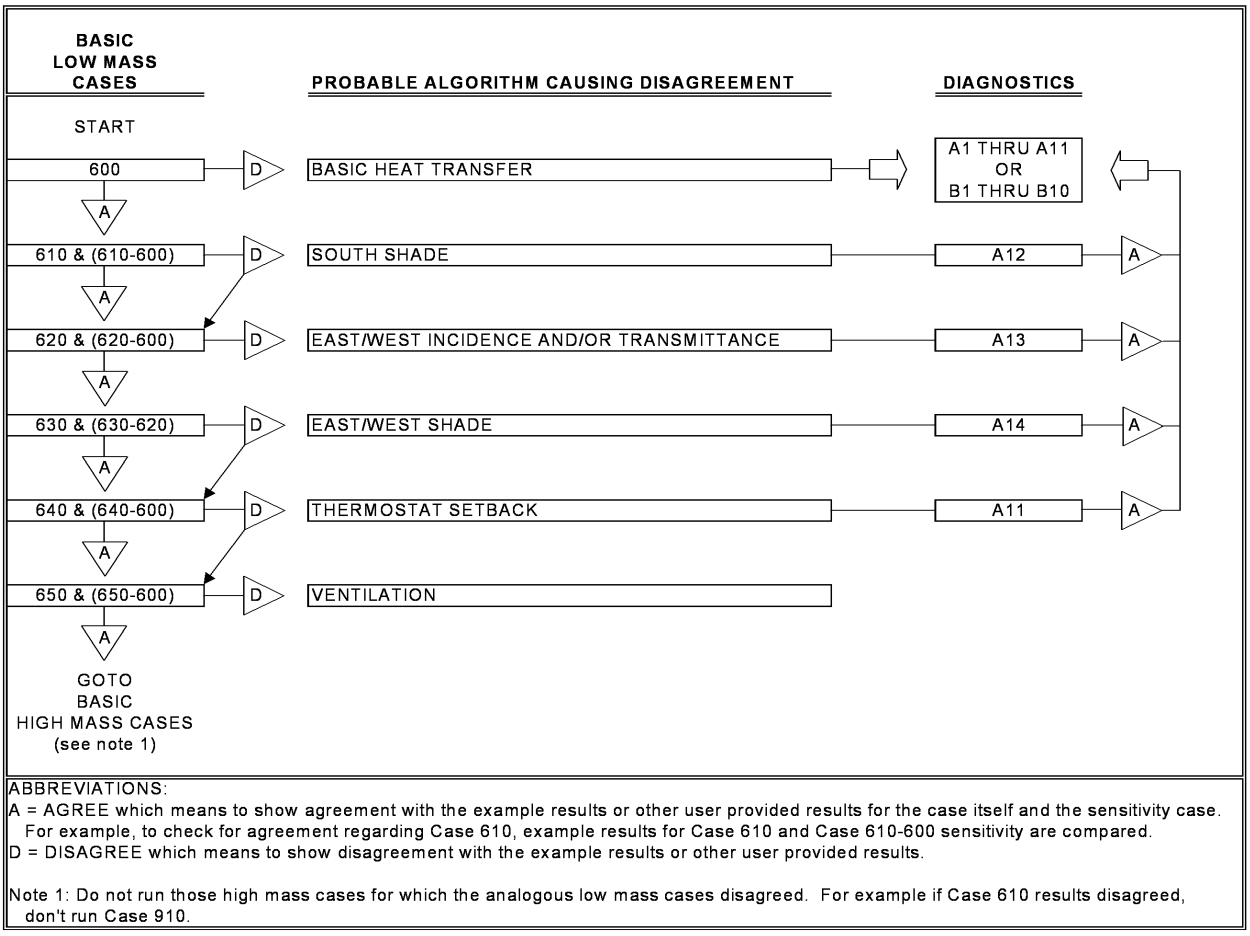

Figure B9-1 BESTEST: Low-mass basic flow diagram.

b. The disagreement was not previously detectable because of compensating differences.
c. The disagreement was not previously detectable because of other unknown interactions.

B9.4.4 Ground-Coupled Slab-on-Grade Analytical Verification Tests

B9.4.4.1 Figures B9-5, B9-6, and B9-7 contain a set of flow diagrams that serve as a guide for diagnosing the cause of disagreeing results that may arise from using the ground coupling test cases of Section 5.2.4. The flow diagrams represent three separate paths: the "a"-series cases (Figure B9-5), the "b"-series cases (Figure B9-6), and the "c"-series cases (Figure B9-7). Selecting "a"-series versus "b"-series or "c"-series depends on the capabilities of the program being tested. For detailed numerical models, the "a"-series cases are to be run first and then the "b" series cases. For most other models, the "b"-series cases should be run first. The "c"-series cases are for models that can match the constraints of NRCan's BASESIMP model.

B9.4.4.2 Testing Models Integrated within Whole-Building Simulation Programs. For slab-on-grade models integrated with whole-building energy simulation programs, the flow diagrams may be used in two ways. The most powerful but time-consuming way is to perform all "b"-series and "c"-series cases (and the "a"-series cases if the model being tested is a detailed numerical model) and then use the diagnostic logic in the flow diagrams to analyze the results. The least time-consuming way is to perform the tests in sequence according to the flow diagrams, beginning with Figure B9-5 for detailed numerical models and Figure B9-6 for other less detailed models. The flow diagram of Figure B9-6 begins with a basic performance test (Case GC30b). It is very important to have confidence in the Case GC30b results before proceeding to the other cases. If output from the tested program agrees satisfactorily with the verified numerical-model results for Case GC30b, continue to check output for the remaining cases according to the flow diagram. If output from the tested program disagrees with verified numerical-model results for Case GC30b, check for input errors. If no input error is found, run all other test cases and follow the diagnostic logic accordingly, as this may help to isolate the source of the difference to one of the specifically tested parameters.

B9.4.4.3 Testing Detailed Numerical Models. When testing detailed numerical models with the "a"-series cases, experience from field trials of the test procedure indicates to initially begin by checking the results of each case individually before moving on to additional cases. Specifically, first run only Case GC10a and check the results versus the analytical solution. If the result is satisfactory, move on to only

Copyrighted material licensed to Sei Ito on 2020-06-26 for licensee's use only.
All rights reserved. No further reproduction or distribution is permitted. Distributed by Techstreet for ASHRAE, www.techstreet.com

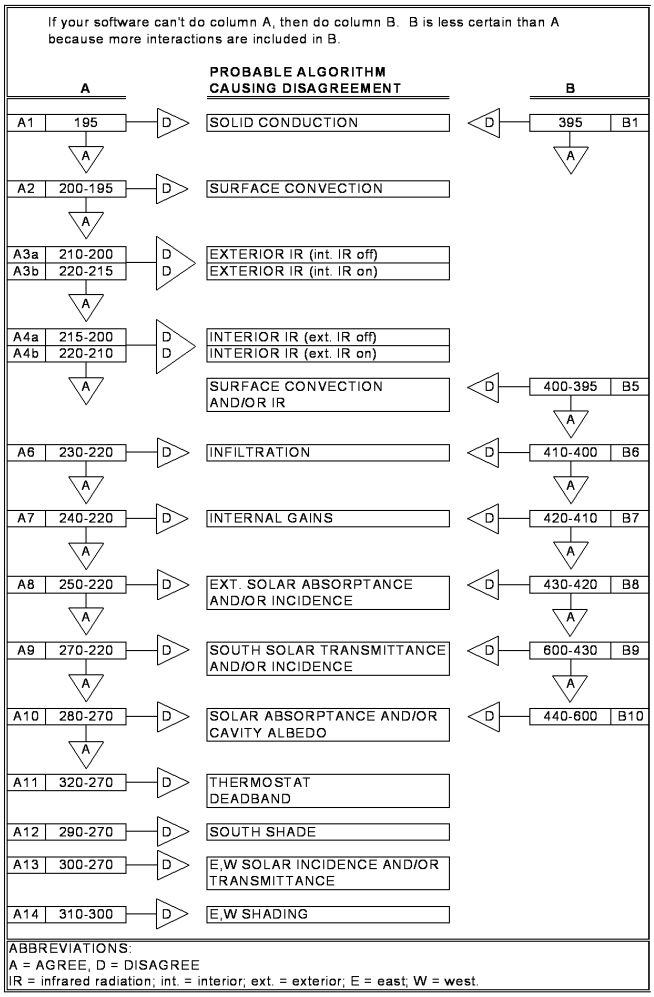

Figure B9-2 BESTEST: Low-mass in-depth flow diagram.

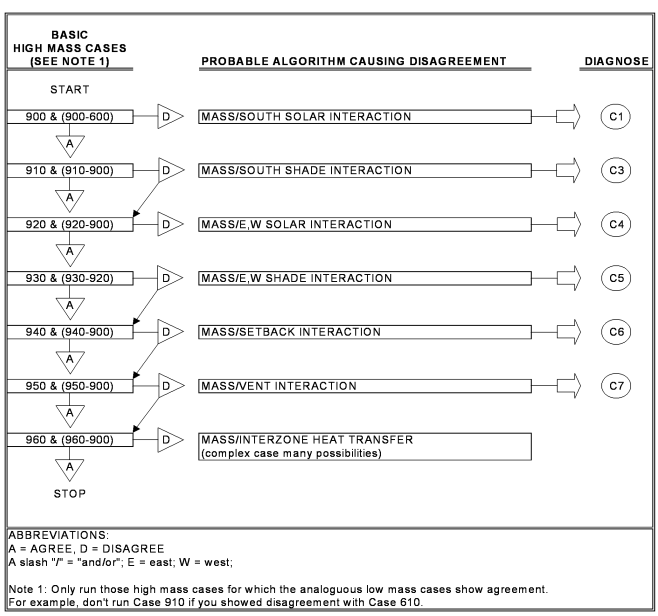

Figure B9-3 BESTEST: High-mass basic flow diagram.

Case GC30a, and similarly to GC40a, then GC30b, then GC40b, as each addresses a fundamental change in boundary conditions for steady-state and dynamic modeling. After each case is checked, it is reasonable to proceed with batch-running the remaining cases. It is recommended to run GC60b, GC65b, and GC30c as one batch followed by the remaining "b"- and "c"-series dynamic cases. Because of geometry variations for GC45b, GC45c, and GC50c, it may be preferable to run those cases last.

B9.4.4.4 Consideration of Verified Numerical-Model Results. At a minimum, the user should compare output with the verified numerical-model results provided in Informative Annex B8, Section B8.2. The user may also choose to compare output with the example simulation results in that section or with other results that were generated using Section 5.2.4 of this test procedure. Information about how the verified numerical-model results and example simulation results were produced is included in Informative Annex B11, Section B11.2. For convenience to users who wish to plot or tabulate their results along with the analytical solution, example simulation results, or both, an electronic version of the example results has been included with the file RESULTS5-2B.XLSX with the accompanying electronic files. Regarding determination of agreement of results discussed in Section B9.2.2, in making this determination for the ground coupling tests of Section 5.2.4, the user should consider that the range of disagreement among the verified numerical-model results represents a secondary mathematical truth standard based on acceptance of the underlying physical assumptions represented by the case specifications. Note that the underlying physical assumptions of the case definitions are a simplification of reality and may not fully represent empirical behavior.

B9.5 Diagnostic Logic Flow Diagram for Space-Cooling Equipment Performance Tests (Section 5.3). Flow diagrams are included here for Cases CE100 through CE200 (Figure B9-8) and Cases CE300 through CE545 (Figures B9-9 and B9-10).

B9.5.1 Analytical Verification Tests, Cases CE100 through CE200

B9.5.1.1 Introduction. Cases CE100 through CE200 (see Sections 5.3.1 and 5.3.2) are to be run first. These are steady-state cases that test basic performance map modeling capabilities and utilize comparisons with quasi-analytical solutions that constitute a secondary mathematical truth standard. The diagnostic logic flow diagram for these cases (Figure B9-8) indicates similar diagnostics for dry-coil and wet-coil (without and with dehumidification) cases. This is really one continuous diagnostic path to be implemented for both dry-coil and wet-coil cases. Performing and analyzing results of the CE100 series tests in blocks, such as CE100 through CE140 and CE150 through CE200, or CE100 through CE200, all at once is recommended. For the CE100 series cases, if a disagreement is uncovered for one of the cases, then fix it and rerun all the CE100 series cases. It is very important to have confidence in the results for cases CE100 though CE200 before proceeding to the other cases.

B9.5.1.2 Consideration of Quasi-Analytical Solution Results. As a minimum, the user should compare output with the quasi-analytical solution results found in Informative

Copyrighted material licensed to Sei Ito on 2020-06-26 for licensee's use only. All rights reserved. No further reproduction or distribution is permitted. Distributed by Techstreet for ASHRAE, www.techstreet.com

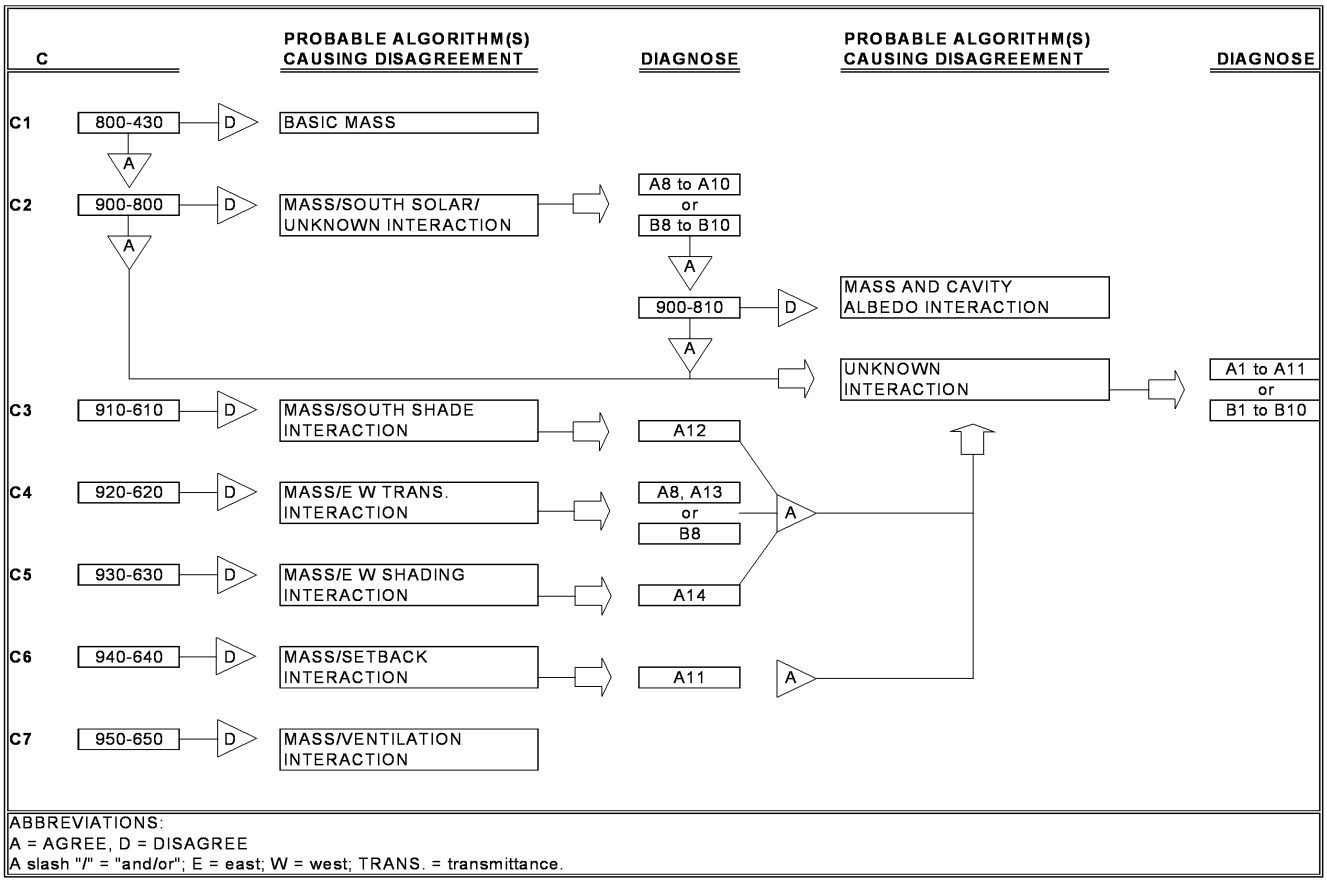

Figure B9-4 BESTEST: High-mass basic and in-depth flow diagram.

Annex B16, Section B16.5.1. The user may also choose to compare output with the example simulation results in that section or with other results that were generated using Sections 5.3.1 and 5.3.2 of this test procedure. Information about how the quasi-analytical solutions and example simulation results were produced is included in Informative Annex B17. For convenience to users who wish to plot or tabulate their results along with the quasi-analytical solution or example simulation results, or both, an electronic version of the example results has been included with the file RESULTS5-3A.XLSX in the electronic media provided with this standard. Regarding determination of agreement of results discussed in Section B9.2.2, in making this determination for the space-cooling equipment performance analytical verification tests of Sections 5.3.1 and 5.3.2, the user should consider that the quasi-analytical solution results given in Informative Annex B16, Section B16.5.1, represent a secondary mathematical truth standard (discussed further in Informative Annex B16, Section B16.2). Note that although the underlying physical assumptions of the case definitions of the mechanical equipment are consistent with those of typical manufacturer equipment performance data, they are by definition a simplification of reality and may not fully represent real empirical behavior.

B9.5.2 Comparative Tests, Cases CE300 through CE545. After successfully completing cases CE100 through CE200, go on to cases CE300 through CE545 (see Sections 5.3.3 and 5.3.4). These cases test additional model features under more dynamic (hourly varying) conditions. Example simulation results for cases CE300 through CE545 (see Informative Annex B16, Section B16.5.2) do not include analytical solutions, so analytical verification versus a mathematical truth standard is not possible for those cases. The flow diagrams for cases CE300 through CE545 may be used in two ways. The most powerful but time-consuming way is to perform all Cases CE300 through CE545 and then use the diagnostic logic in the flow diagrams to analyze the results. The least time-consuming way is to perform the tests in sequence according to the flow diagrams, beginning with Figure B9-9.

The flow diagram of Figure B9-9 begins with a basic performance test (Case CE300). It is very important to have confidence in your Case CE300 results before proceeding to the other cases. If output from the tested program agrees satisfactorily with other example results for Case CE300, continue to check output for the remaining cases according to the flow diagram. If output from the tested program disagrees with other example results for Case CE300, follow the diagnostic logic accordingly. The diagnostic logic for Cases CE500 through CE545 is presented in Figure B9-10. Cases CE500 through CE545 test similar effects as Cases CE100 through CE200 but in an hourly dynamic context using expanded performance data without analytical verification. The sensitivity result "CE500 – CE300" isolates the effect of outdoor air but

Copyrighted material licensed to Sei Ito on 2020-06-26 for licensee's use only.
All rights reserved. No further reproduction or distribution is permitted. Distributed by Techstreet for ASHRAE, www.techstreet.com

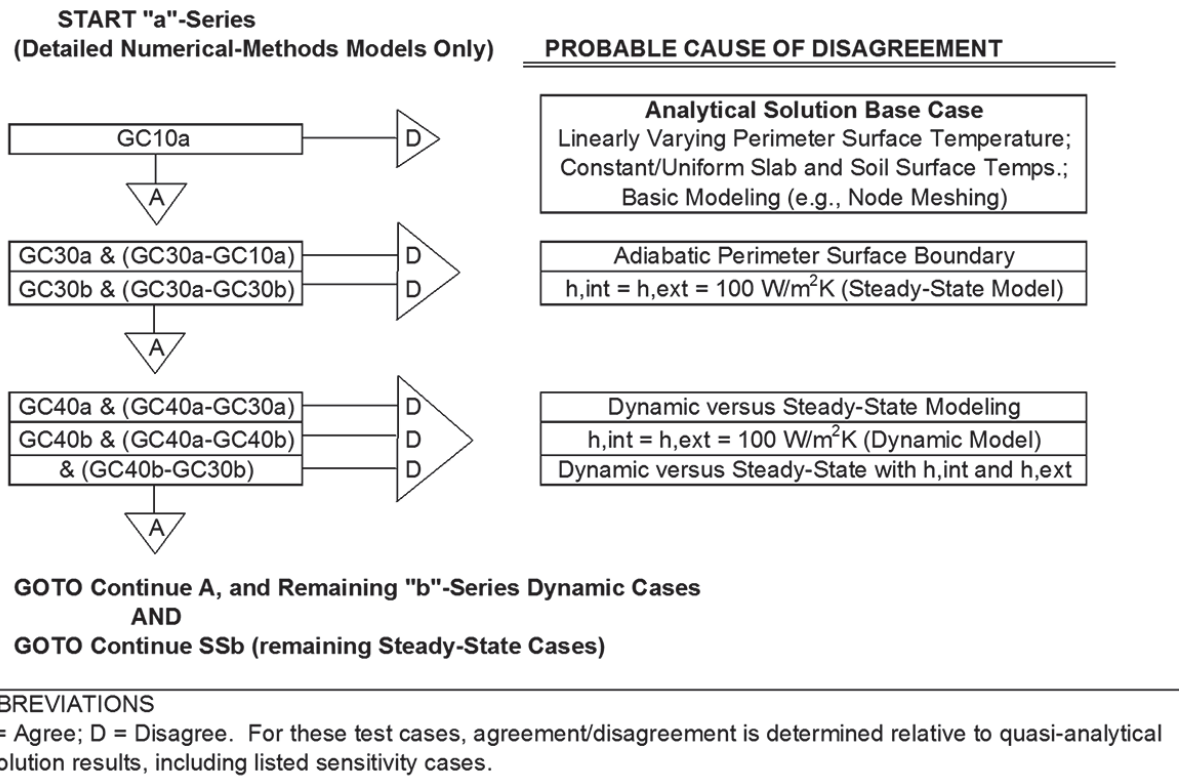

Figure B9-5 Cases GC10a through GC40b ("a"-series) diagnostic logic flow diagram.

with some noise because of varying internal gains schedules between Case CE300 and Case CE500 and because the air distribution fan cycles with the compressor in Case CE500. In contrast with steady-state Cases CE100 through CE200 that were solved analytically, the more realistic nature of Cases CE300 through CE545 allows us to gage the importance of being able to simulate various effects accurately in terms of annual energy performance. For example, a large percentage difference for a given result that has only a very small impact on annual energy use may not be of concern, whereas a small percentage difference with a large impact on annual energy use may be deemed important.

There are some cases where it is possible to proceed even if disagreements were uncovered in the previous case. For example, in Case CE410, inability to model an economizer with compressor lockout does not necessarily affect the usefulness of the program (or the ability to further test the program) for modeling other types of economizer controls or other mechanical equipment features. Thus, the flow diagram has an extra arrow connecting Case CE410 and Case CE420, which shows that you may proceed regardless of the results for Case CE410. Where cases are connected by a single arrow, a satisfactory result is required in order to proceed to the next case. For example, in Case CE310, the inability to model latent load removal makes it difficult to proceed with these tests until the disagreement is reconciled.

B9.6 Examples

B9.6.1 Example Using Flow Diagrams for Building Thermal Envelope and Fabric Load Tests (Sections 5.2.1 and 5.2.2). A program shows agreement with Case 600 but shows large disagreement with the example results annual sensible cooling load predictions for Case 610. Figure B9-1 suggests that the potential algorithmic source of the difference is with the shading algorithm and directs the user to look at the sensitivity results for shading as represented by the difference between the output values from Cases 600 and 610. The flow diagram then directs the user to diagnostic A12. Diagnostic A12 will either confirm shading as the source of the difference or direct the user to additional diagnostics if the shading algorithm is okay. The logic is sequential in that, to show disagreement with Case 610 – Case 600, and to show agreement with A12, indicates differences elsewhere in Case 610 – Case 600 and, therefore, possible compensating differences in Case 600. To show disagreement with both Case 610 – Case 600 and A12 confirms a shading algorithm as the source of the difference.

IEA BESTEST [B-29] gives examples of how the tests were used to trace and correct specific algorithmic and input errors in the programs used to produce the example results of Informative Annex B8.

B9.6.2 Example Using Flow Diagrams for Ground-Coupled Slab-on-Grade Analytical Verification Tests (Section 5.2.4). A program shows disagreement with GC70b. Figure B9-6 suggests that the potential source of algorithmic differences includes modeling of interior- and exterior-surface heat transfer coefficients. The user is directed to check diagnostics B1 and B2. If the disagreement persists for B1, the cause is likely related to modeling of the slab interior-surface heat transfer coefficient. If there is no disagreement for B1, go on to B2. If the dis-

Copyrighted material licensed to Sei Ito on 2020-06-26 for licensee's use only.
All rights reserved. No further reproduction or distribution is permitted. Distributed by Techstreet for ASHRAE, www.techstreet.com

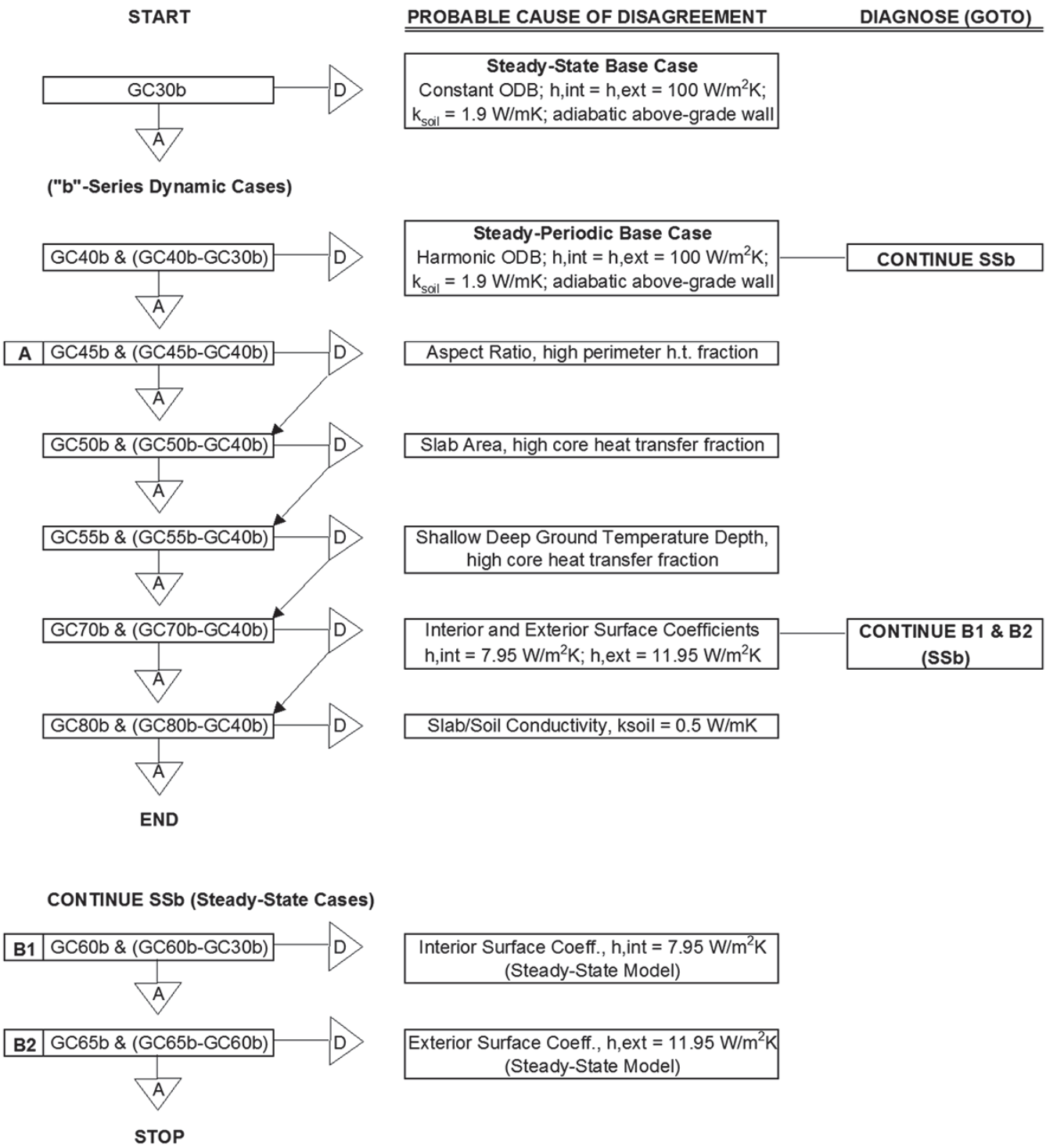

ABBREVIATIONS

A = Agree; D = Disagree. For these test cases, agreement/disagreement is determined relative to quasi-analytical solution results, including listed sensitivity cases.

Figure B9-6 Cases GC30b through GC80b ("b"-series) diagnostic logic flow diagram.

Copyrighted material licensed to Sei Ito on 2020-06-26 for licensee's use only.
All rights reserved. No further reproduction or distribution is permitted. Distributed by Techstreet for ASHRAE, www.techstreet.com

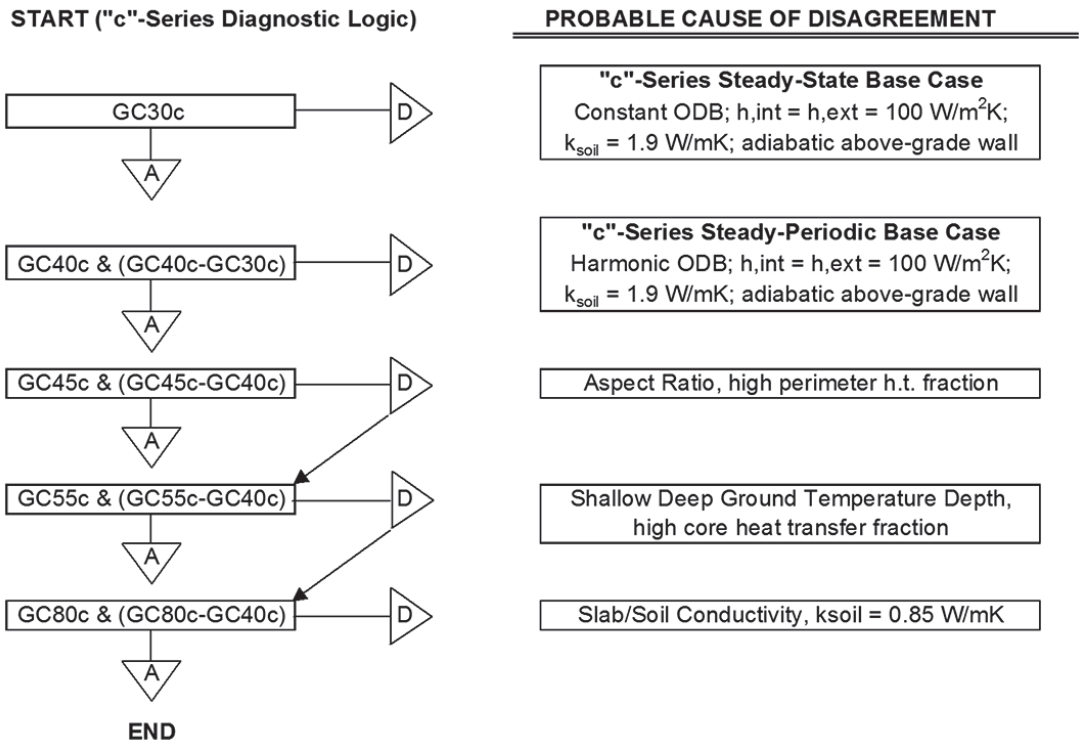

ABBREVIATIONS
A = Agree; D = Disagree. For these test cases, agreement/disagreement is determined relative to quasi-analytical solution results, including listed sensitivity cases.

Figure B9-7 Cases GC30c through GC80c ("c"-series cases) diagnostic logic flow diagram.

agreement appears for B2, its cause is likely related to modeling the exterior-surface heat transfer coefficient. If there is no disagreement for B1 or B2, the difference could be related to dynamic modeling versus steady-state modeling or some other problem.

B9.6.3 Example Using Flow Diagrams for Space-Cooling Equipment Performance Analytical Verification Tests (Sections 5.3.1 and 5.3.2). A program shows agreement with Case CE100 but shows large disagreement with the quasi-analytical solution results of energy consumption predictions for Case CE130. Figure B9-8 suggests the potential algorithmic source of the difference is with the algorithm for incorporating part-load operating effects into the energy consumption for a dry coil.

HVAC BESTEST, Volume I [B-16] gives examples of how the tests were used to trace and correct specific algorithmic and input errors in the programs used in the field trials for which results are given in Informative Annex B16, Section B16.5.1.

B9.6.4 Example Using Flow Diagrams for HVAC Equipment Performance Comparative Tests (Sections 5.3.3 and 5.3.4). A program shows disagreement with Case CE300. Because this is the base case for the CE300 series, Figure B9-9 suggests a number of potential sources of algorithmic differences, including dynamic variation of load, 15% outdoor air (mixed with return air), continuous indoor fan operation, or hourly dynamic equipment performance as *f*(EDB, EWB, ODB, PLR).The user is directed to check diagnostics C1 and C2 utilizing Case CE500 (see Figure B9-10). If the disagreement persists for C1 and/or C2, this likely eliminates outdoor air mixing and continuous fan operation as the cause of the problem. The user is then directed to run the remainder of the CE500-series cases and if the disagreement persists to also recheck results from Cases CE100 through CE200 (see Figure B9-8). If the cause of the disagreement persists for the remaining CE500-series cases, and the CE100 results are still satisfactory, then the problem is likely isolated to performance-map parameter *f*(ODB, EWB, EDB) sensitivity over the expanded range of performance data or some other problem related to hourly dynamic modeling.

HVAC BESTEST Volume 2 [B-17] gives examples of how the tests were used to trace and correct specific algorithmic and input errors in the programs used in the field trials for which results are given in Informative Annex B16, Section B16.5.2.

Copyrighted material licensed to Sei Ito on 2020-06-26 for licensee's use only. All rights reserved. No further reproduction or distribution is permitted. Distributed by Techstreet for ASHRAE, www.techstreet.com

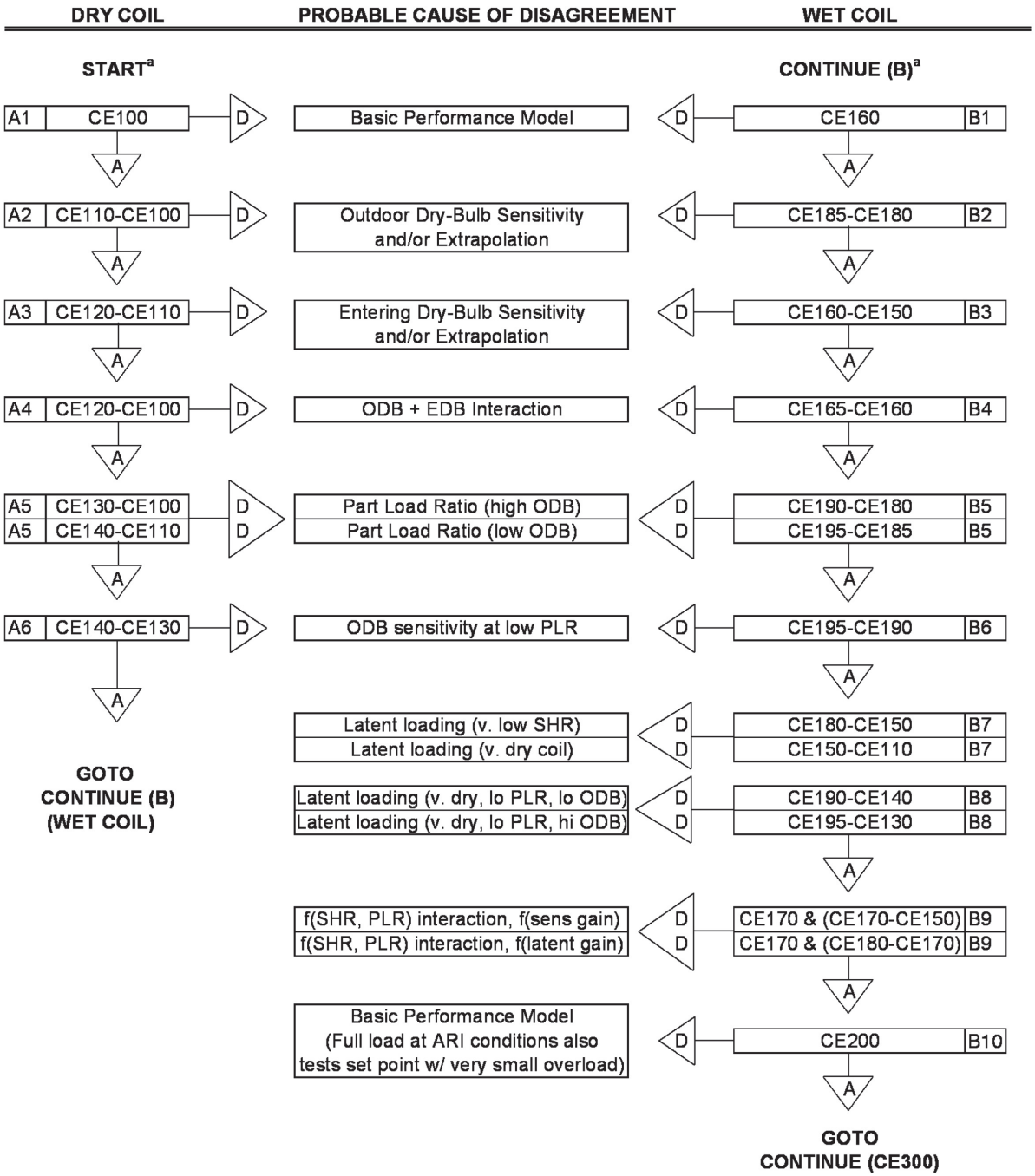

ABBREVIATIONS

A = Agree; i.e., agree with analytical solution results for the case itself and the sensitivity case. E.g., to check for agreement regarding Case CE130, compare example results for Case CE130 and CE130-CE100 sensitivity.

D = Disagree; i.e., show disagreement with analytical solution results.

NOTES

a It is better to perform/analyze results of these tests in blocks such as CE100 to CE140 and CE150 to CE200.

Figure B9-8 Cases CE100 through CE200 (steady-state analytical verification) diagnostic logic flow diagram.

Copyrighted material licensed to Sei Ito on 2020-06-26 for licensee's use only. All rights reserved. No further reproduction or distribution is permitted. Distributed by Techstreet for ASHRAE, www.techstreet.com

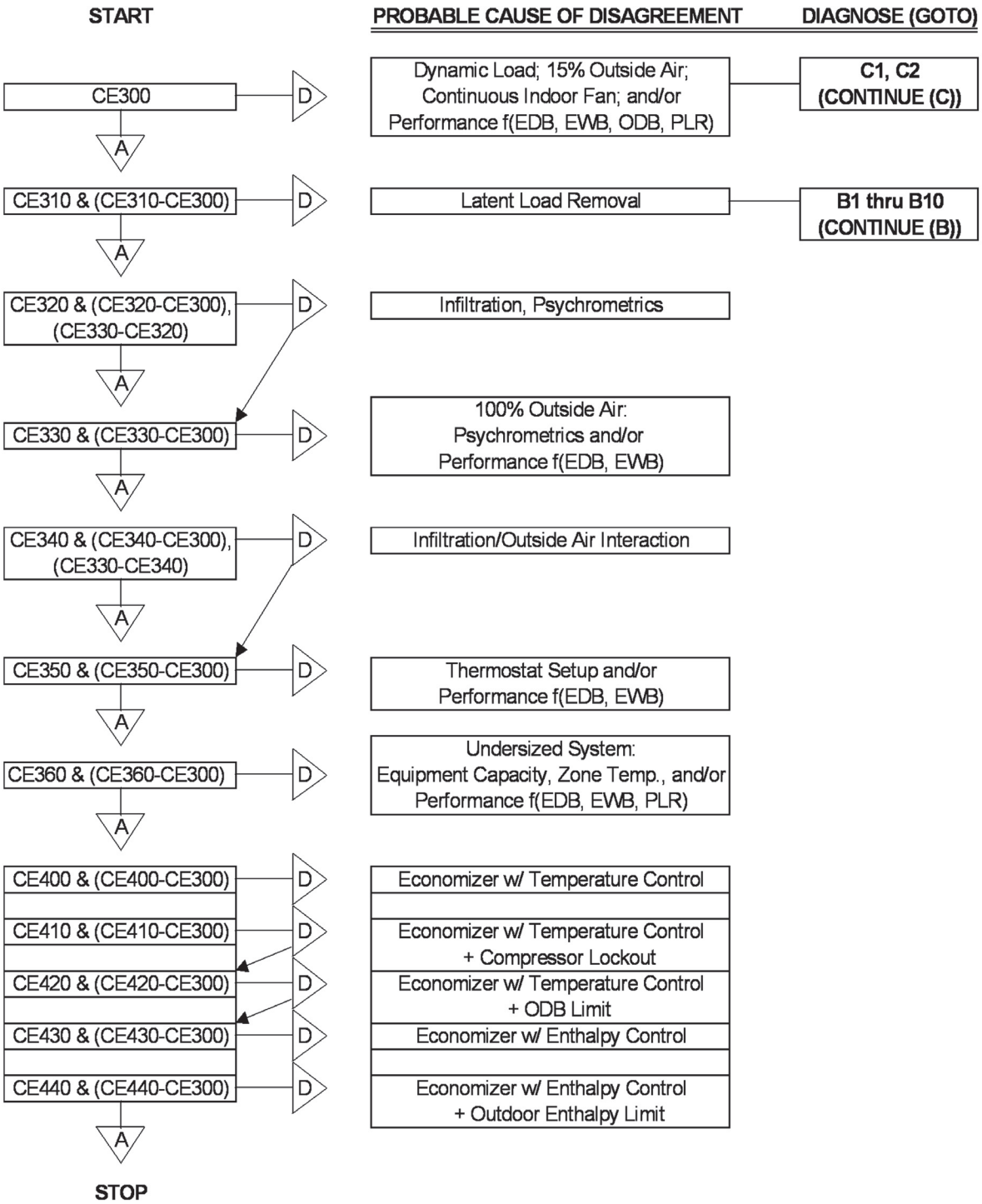

ABBREVIATIONS

A = Agree; D = Disagree. For the CE300 series, agreement/disagreement is determined relative to example simulation results or other user-provided results and the sensitivity case.

Figure B9-9 Cases CE300 through CE440 (comparative test cases with outdoor air) diagnostic logic flow diagram.

Copyrighted material licensed to Sei Ito on 2020-06-26 for licensee's use only.
All rights reserved. No further reproduction or distribution is permitted. Distributed by Techstreet for ASHRAE, www.techstreet.com

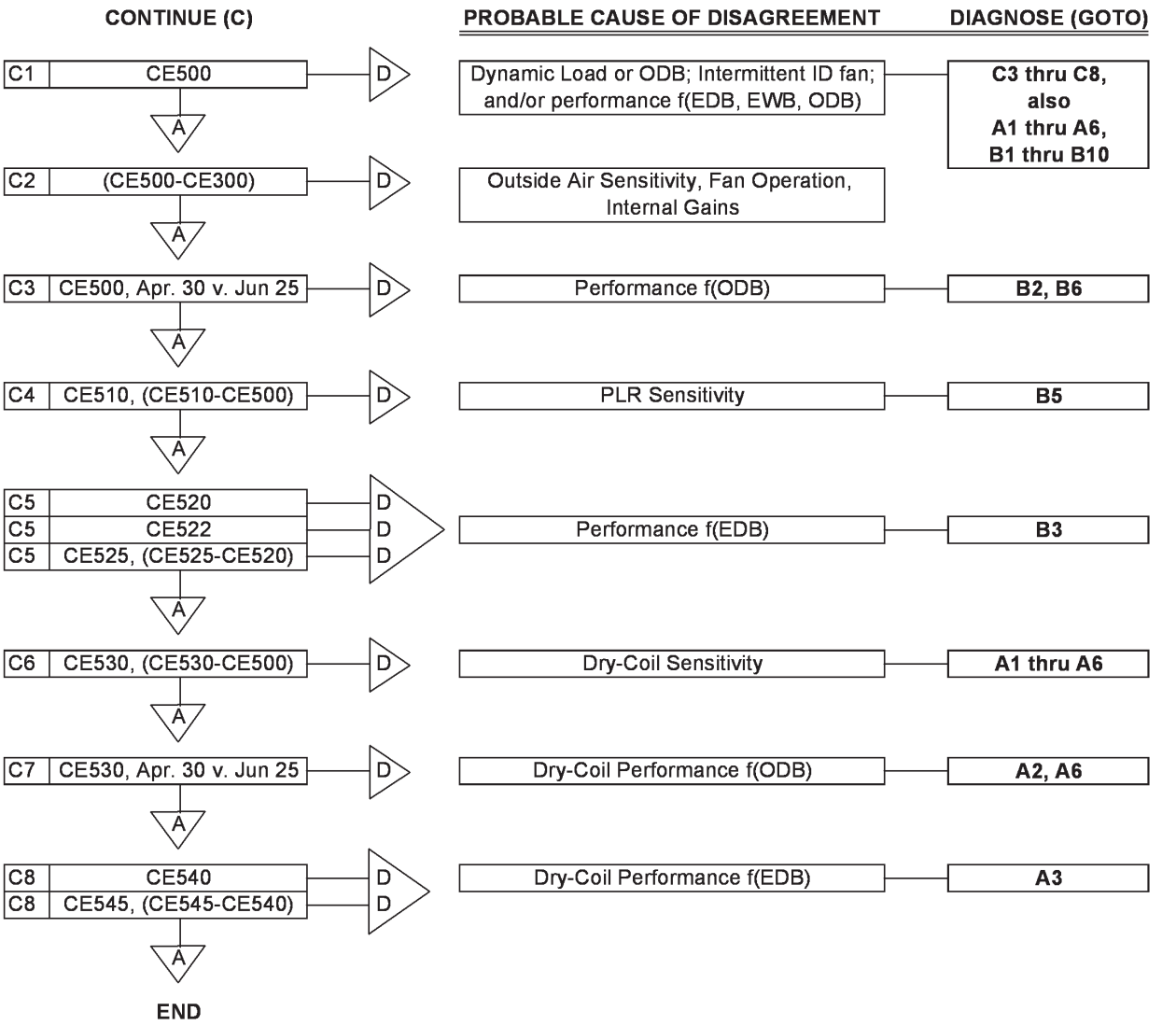

ABBREVIATIONS

A = Agree; D = Disagree. For the CE300 series, agreement/disagreement is determined relative to example simulation results or other user-provided results and the sensitivity case.

Figure B9-10 Cases CE500 through CE545 (comparative test cases without outdoor air) diagnostic logic flow diagram.

Copyrighted material licensed to Sei Ito on 2020-06-26 for licensee's use only. All rights reserved. No further reproduction or distribution is permitted. Distributed by Techstreet for ASHRAE, www.techstreet.com

(This annex is not part of the standard. It is merely informative and does not contain requirements necessary for conformance to the standard. It has not been processed according to the ANSI requirements for a standard and may contain material that has not been subject to public review or a consensus process. Unresolved objectors on informative material are not offered the right to appeal at ASHRAE or ANSI.)

INFORMATIVE ANNEX B10
INSTRUCTIONS FOR WORKING WITH RESULTS SPREADSHEETS PROVIDED WITH THE STANDARD

For the convenience of users, a printout of documentation for navigating the example results files is included below.

B10.1 Documentation for RESULTS5-2A.XLSX (given in RESULTS5-2A.DOCX). This spreadsheet contains the IEA 12B/21C participant results that are presented as informative example results for the Section 5.2.1, 5.2.2, and 5.2.3 building thermal envelope and fabric load tests as described in Informative Annex B8, Section B8.1. Table B10-1 presents an index of all sheets contained in the RESULTS5-2A.XLSX file.

The "ReadMe" sheet provides a general overview of the file. Example results tables and figures are listed with location (sheet tab and cell range) in Informative Annex B8, Section B8.1.2, and also on the "Table List" and "Figure List" sheets in the XLSX file.

New results can be imported to the "YourData" sheet and will automatically appear in all tables and also in the graphic figures. The "YourData" sheet has been designed with the same data structure (data units, format, and position) as the Standard Output Report spreadsheet Sec5-2Aout.XLS file so that new results can be copied directly. Import data so that Cell B61 of Sec5-2Aout.XLS is in B61 of sheet "YourData." Check that the first value (Annual Heating Load for Case 600) is in YourData!B65. The "Adding Results" sheet has instructions for accomplishing this and also has a full tabulation of results locations. New results data will appear in the rightmost column of each table and in all figures.

To print example results, or example results with new user-generated results, go to the "Title Page" sheet and follow the instructions starting in Cell B5.

B10.2 Documentation for RESULTS5-2B.XLSX (given in RESULTS5-2B.DOCX). This spreadsheet contains the IEA Task 34/43 participant results that are presented as informative example results for the Section 5.2.4 ground-coupled slab-on-grade analytical verification tests as described in Annex B8, Section B8.2. Table B10-2 presents an index of all sheets contained in the RESULTS5-2B.XLSX file.

The "ReadMe" sheet provides a general overview of the file. Example results tables and figures are listed with location (sheet tab and cell range) in Informative Annex B8, Section B8.2.4, and also on the "Table List" and "Figure List" sheets in the XLSX file.

New results can be imported to the "YourData" sheet and will automatically appear in all tables and also in the graphic figures. The "YourData" sheet has been designed with the same data structure (data units, format, and position) as the Standard Output Report spreadsheet Sec5-2Bout.XLS file so that new results can be copied directly. Import data so that Cell E53 of Sec5-2Bout.XLS is in E53 of sheet "YourData." Check that q_{floor} for Case GC10a is in YourData!E60. The "Adding Results" sheet has instructions for accomplishing this and also has a full tabulation of results locations. New results data will appear in the rightmost column of each table and in all figures.

To print example results, or example results with new user-generated results, go to the "Title Page" sheet and follow the instructions starting in Cell B5.

B10.3 Documentation for RESULTS5-3A.XLSX (given in RESULTS5-3A.DOCX). This file contains informative example results generated for the Section 5.3.1 and 5.3.2 HVAC equipment performance tests CE100 through CE200 as described in Informative Annex B16, Section B16.5.1. Table B10-3 presents an index of all sheets contained in the RESULTS5-3A.XLSX file.

The "Read Me" sheet provides a general overview of the file. Example results tables and figures are listed with location (sheet tab and cell range) in Informative Annex B16, Section B16.5.1, and also on the "Table List" and "Figure List" sheets in the XLSX file.

New results can be imported to the "YourData" sheet and will automatically appear in the rightmost column of all tables and also in the graphic figures. The "YourData" sheet has been designed with the same data structure (data units, format, and position) as the Standard Output Report spreadsheet Sec5-3Aout.XLS file so that new results can be copied directly. Import data so that Cell B25 of Sec5-3Aout.XLS is in B25 of sheet "YourData." Check that the first value (Total Consumption kWh for CE100) is in YourData!B25. The "Adding Results" sheet has instructions for accomplishing this, and also has a full tabulation of results locations.

To print example results, or example results with new user-generated results, go to the "Title Page" sheet and follow the instructions starting in Cell B5.

B10.4 Documentation for RESULTS5-3B.XLSX (given in RESULTS5-3B.DOCX). This file contains informative example results generated for the Section 5.3.3 and 5.3.4 HVAC equipment performance tests CE300 through CE545 as described in Informative Annex B16, Section B16.5.2. Table B10-4 presents an index of all sheets contained in the RESULTS5-3B.XLSX file.

The "Read Me" sheet provides a general overview of the file. Example results tables and figures are listed with location (sheet tab and cell range) in Informative Annex B16, Section B16.5.2, and also on the "Table List" and "Figure List" sheets in the XLSX file.

New results can be imported to the "YourData" sheet and will automatically appear in the rightmost column of all tables and also in the graphic figures. The "YourData" sheet has been designed with the same data structure (data units, format, and position) as the Standard Output Report spreadsheet Sec5-3Bout.XLS file so that new results can be copied directly. Import data so that Cell B62 of Sec5-3Bout.XLS is in B62 of sheet "YourData." Check that the first value (Total Consumption kWh for CE300) is in YourData!B62. The

Copyrighted material licensed to Sei Ito on 2020-06-26 for licensee's use only. All rights reserved. No further reproduction or distribution is permitted. Distributed by Techstreet for ASHRAE, www.techstreet.com

"Adding Results" sheet has instructions for accomplishing this, and also has a full tabulation of results locations.

To print example results, or example results with new user-generated results, go to the "Title Page" sheet and follow the instructions starting in Cell B5.

B10.5 Documentation for RESULTS5-4.XLSX (given in RESULTS5-4.DOCX). This file contains informative example results generated for the Section 5.4 HVAC equipment performance tests HE100 through HE230 as described in Informative Annex B16, Section B16.6. Table B10-5 presents an index of all sheets contained in the RESULTS5-4.XLSX file.

The "Read Me" sheet provides a general overview of the file. Example results tables and figures are listed with location (sheet tab and cell range) in Informative Annex B16, Section B16.6, and also on the "Table List" and "Figure List" sheets in the XLSX file.

New results can be imported to the "YourData" sheet and will automatically appear in the rightmost column of all tables and also in the graphic figures. The "YourData" sheet has been designed with the same data structure (data units, format, and position) as the Standard Output Report spreadsheet Sec5-4out.XLS file so that new results can be copied directly. Import data so that Cell B20 of Sec5-4out.XLS is in B20 of sheet "YourData." Check that the first value (TOTAL FURNACE LOAD GJ for Case HE100) is in YourData!B20. The "Adding Results" sheet has instructions for accomplishing this, and also a full tabulation of results locations.

To print example results, or example results with new user-generated results, go to the "Title Page" sheet and follow the instructions starting in Cell B6.

B10.6 Documentation for RESULTS5-5FCSZ.XLSX and RESULTS5-5CVVV.XLSX (given in RESULTS5-5.DOCX). These files contain informative example results generated for the Section 5.5 air-side HVAC equipment performance test cases AE101 through AE245 (Sections 5.5.1 and 5.5.2) and AE301 through AE445 (Sections 5.5.3 and 5.5.4) as described in Informative Annex B16, Sections B16.7.1 and B16.7.2, respectively. Tables B10-6 and B10-7 present an index of all sheets contained in the RESULTS5-5FCSZ.XLSX and RESULTS5-5CVVV.XLSX files, respectively.

The "Read Me" sheet in each results file provides a general overview of each file. Example results tables and figures are listed with location (sheet tab and cell range) in Informative Annex B16, Section B16.7, and also on the "Table List" and "Figure List" sheets in each results file.

For each results file, new results can be imported to the "YourData" sheet and will automatically appear in the rightmost column of all tables and also in the graphic figures. The "YourData" sheet has been designed with the same data structure (data units, format, and position) as the standard output report spreadsheet Sec5-5out.XLSX file so that new results can be copied directly. Import data so that the software name entered in Cell C50 of Sec5-5out.XLSX is in C50 of sheet "YourData." Check that the first output value (zone sensible heating load in kWh/h for AE101) is in YourData!C61. The "Adding Results" sheet has instructions for accomplishing this and also has a full tabulation of results locations.

To print example results, or example results with new user-generated results, go to the "Title Page" sheet and follow the instructions starting in Cell B5.

B10.7 Documentation for RESULTS7-2.XLS (given in RESULTS7-2.DOCX). This file contains Tier 1 and Tier 2 test case example simulation results presented in Informative Annex B20. Table B10-8 presents an index of all sheets contained in the RESULTS7-2.XLS file.

Enter data within the sheet with tab label "Sec7-2out" (leftmost tab) within appropriate yellow highlighted cells. Entered data automatically flows to the sheet with tab label "PlotData" and to all of the plots (see contents of sheets, listed below). Example results shown in charts are automatically adjusted for seasonal comparison for heating and cooling seasons identified by the tested software entered in sheet "Sec7-2out."

Copyrighted material licensed to Sei Ito on 2020-06-26 for licensee's use only.
All rights reserved. No further reproduction or distribution is permitted. Distributed by Techstreet for ASHRAE, www.techstreet.com

Table B10-1 Index of Sheets in RESULTS5-2A.XLSX

Sheet	Description
Read Me	General directions to using this workbook.
Adding Results	Instructions for adding new results. Also has cell map to individual data items in example results and "YourData" sheets.
YourData	For inputting new simulation test results; see sheet "Adding Results" for instructions. Data input to this sheet will pass through into all tables and charts.
Title Page	Title page for printed informative example or new comparison results. Sets headers for tables and charts. See instructions on page.
Program List	List of simulation programs and organization producing Informative Annex B8, Section B8.1 example results.
Table List	Listing of Informative Annex B8, Section B8.1 tables with locations.
Figure List	Listing of Informative Annex B8, Section B8.1 figures with locations.
Tables 1 through Tables 6 (6 sheets)	Formatted summary results tables, including example simulation results and statistics. See Informative Annex B8, Section B8.1.2 or the "Table List" sheet in RESULTS5-2A.XLSX for a list of all tables with sheet tab and cell range location. New results (entered in sheet "YourData") automatically appear on the right side of each table.
Fig B8-1, "Ann Incident Solar" through Fig B8-59 "Hrly-Loads-Case900" (59 sheets)	Fifty-nine summary charts (one per sheet). See Informative Annex B8, Section B8.1.2 or the "Figure List" sheet in RESULTS5-2A.XLSX for a list of all figures with sheet tab location.
Data for charts	Unformatted data for use by the 59 charts. New results (entered in sheet "YourData") automatically appear on the right side of each data table.
ESP-DMU through TASE (8 sheets)	Results sheets from each simulation program used to produce example results.

Table B10-2 Index of Sheets in RESULTS5-2B.XLSX

Sheet	Description
Read Me	General directions to using this workbook.
Adding Results	Instructions for adding new results. Also has cell map to individual data items in example results and "YourData" sheets.
YourData	For inputting new simulation test results; see sheet "Adding Results" for instructions. Data input to this sheet will pass through into all tables and charts.
Title Page	Title page for printed informative example or new comparison results. Sets headers for tables and charts. See instructions on page.
Program List	List of simulation programs and organization producing Informative AnnexB8, Section B8.2 example results.
Table List	Listing of Informative Annex B8, Section B8.2 tables with locations.
Figure List	Listing of Informative Annex B8, Section B8.2 figures with locations.
Tables 1 through Tables 6 (6 sheets)	Formatted summary results tables, including example simulation results and statistics. See Informative Annex B8, Section B8.2.4 or the "Table List" sheet in RESULTS5-2B.XLSX for a list of all tables with sheet tab and cell range location. New results (entered in sheet "YourData") automatically appear on the right side of each table.
Fig-B8.2-1 "QFSS" through Fig-B8.2-32 "ODBmin" (32 sheets)	Thirty-two summary charts (one per sheet). See Informative Annex B8, Section B8.2.4 or the "Figure List" sheet in RESULTS5-2B.XLSX for a list of all figures with sheet tab location.
Aggregator	Unformatted data compilation, all programs. New results (entered in sheet "YourData") automatically appear on the right side of each data table.
ABSdata through DELdata	These sheets are similar to "Aggregator." Formatted for use as source data for charts and tables.
Analytical	Analytical solution for Case GC10a.
Basecalc through VA114	Results from each simulation program.

Copyrighted material licensed to Sei Ito on 2020-06-26 for licensee's use only.
All rights reserved. No further reproduction or distribution is permitted. Distributed by Techstreet for ASHRAE, www.techstreet.com

Table B10-3 Index of Sheets in RESULTS5-3A.XLSX

Sheet	Description
Read Me	General directions to using workbook.
Adding Results	Instructions for adding new results. Also has cell map to individual data items in example results and "YourData" sheets.
YourData	For inputting new simulation test results; see sheet "Adding Results" for instructions. Data input to this sheet will pass through into all tables and charts.
Title Page	Title page for printed informative example or new comparison results. Sets headers for tables and charts. See instructions on page.
Program List	List of simulation programs and organizations producing Informative Annex B16, Section B16.5.1 example results.
Table List	Listing of Informative Annex B16, Section B16.5.1 tables with locations.
Figure List	Listing of Informative Annex B16, Section B16.5.1 figures with locations.
Q-Prt1 through Q-Prt7 (7 sheets)	Formatted summary results tables including quasi-analytical solution results, example simulation results, and statistics. See Informative Annex B16, Section B16.5.1 or the "Table List" sheet in RESULTS5-3A.XLSX for a list of all tables with sheet tab and cell range location. New results (entered in sheet "YourData") automatically appear on the right side of each table.
Fig B16.5.1-1 "COP" through Fig B16.5.1-26 "QCL-QZL" (26 sheets)	Twenty-six summary charts (one per sheet). See Informative Annex B16, Section B16.5.1 or the "Figure List" sheet in RESULTS5-3A.XLSX for a list of all figures with sheet tab location.
A	Unformatted data compilation, all programs
Q	Formatted summary results tables including quasi-analytical solution results, example simulation results, and statistics. Data here feeds into data sheets for use in charts. Same tables are presented one per sheet on sheets Q-Ptr1 to Q-Ptr7. New results (entered in sheet "YourData") automatically appear on the right side of each table. See below for sheet Q table locations.
Data-Electr through Data-TempHum (5 sheets)	Formatted data sheets for use by the 26 data charts. New results (entered in sheet "YourData") automatically appear on the right side of each data table.
DOE21E-NREL through E+V1 (7 sheets)	Results sheets from each simulation program used to produce example results.
Analytical-TUD through Analytical-HTAL2 (3 sheets)	Individual quasi-analytical solution results.

Copyrighted material licensed to Sei Ito on 2020-06-26 for licensee's use only.
All rights reserved. No further reproduction or distribution is permitted. Distributed by Techstreet for ASHRAE, www.techstreet.com

Table B10-4 Index of Sheets in RESULTS5-3B.XLSX

Sheet	Description
Read Me	General directions to using this workbook.
Adding Results	Instructions for adding new results. Also has cell map to individual data items in example results and "YourData" sheets.
YourData	For inputting new simulation test results; see sheet "Adding Results" for instructions. Data input to this sheet will pass through into all tables and charts.
Title Page	Title page for printed informative example or new comparison results. Sets headers for tables and charts. See instructions on page.
Program List	List of simulation programs and organization producing Informative Annex B16, Section B16.5.2 example results
Table List	Listing of Informative Annex B16, Section B16.5.2 tables with locations.
Figure List	Listing of Informative Annex B16, Section B16.5.2 figures with locations.
Table-Q	Formatted summary results tables including example simulation **annual mean** results and statistics. See Informative Annex B16, Section B16.5.2 or the "Table List" sheet in RESULTS5-3B.XLSX for a list of all tables with sheet tab and cell range location. New results (entered in sheet "Your data") automatically appear on the right side of each table.
Table-R	Formatted summary results tables including example simulation **annual hourly maximum and minimum** results and statistics. See Informative Annex B16, Section B16.5.2 or the "Table List" sheet in RESULTS5-3B.XLSX for a list of all tables with sheet tab and cell range location. New results (entered in sheet "Your data") automatically appear on the right side of each table.
Table-S	Formatted summary results tables including example simulation **June 28 hourly** results. See Informative Annex B16, Section B16.5.2 or the "Table List" sheet in RESULTS5-3B.XLSX for a list of all tables with sheet tab and cell range location. New results (entered in sheet "Your data") automatically appear in the bottommost table.
Table-T	Formatted summary results tables including example simulation **sensitivities to annual mean, maximum, and minimum** results and statistics. See Informative Annex B16, Section B16.5.2 or the "Table List" sheet in RESULTS5-3B.XLSX for a list of all tables with sheet tab and cell range location. New results (entered in sheet "Your data") automatically appear on the right side of each table.
Fig B16.5.2-1 Qtot through Fig B16.5.2-52 HrOHR (52 sheets)	Summary **charts** (one per sheet). See Informative Annex B16, Section B16.5.2 or the "Figure List" sheet in RESULTS5-3B.XLSX for a list of all figures with sheet tab location.
A	Unformatted raw data compilation for all programs. Used by other results tables.
Qdata through Tdata (4 sheets)	These sheets are similar to Table-Q through Table-T but formatted for use as **source data for charts**.
TRNSYS-TUD through HOT3000 (6 sheets)	Results sheets from each simulation program used to produce example results.

Copyrighted material licensed to Sei Ito on 2020-06-26 for licensee's use only. All rights reserved. No further reproduction or distribution is permitted. Distributed by Techstreet for ASHRAE, www.techstreet.com

Table B10-5 Index of Sheets in RESULTS5-4.XLSX

Sheet	Description
Read Me	General directions to using the workbook.
Adding Results	Instructions for adding new results. Also has cell map to individual data items in example results and "YourData" sheets.
YourData	For inputting new simulation test results; see sheet "Adding Results" for instructions. Data input to this sheet will pass through into all tables and charts.
Title Page	Title page for printed informative example or new comparison results. Sets headers for tables and charts. See instructions on page.
Program List	List of simulation programs and organization producing Informative Annex B16, Section B16.6 example results.
Table&Figure List	Listing of Informative Annex B16, Section B16.6 tables and figures with locations.
Tables	Formatted summary results tables including analytical/quasi-analytical solution results, example simulation results, and statistics. See Informative Annex B16, Section B16.6 or the "Table List" sheet in RESULTS5-4.XLSX for a list of all tables with sheet tab and cell range location. New results (entered in sheet "Your data") automatically appear on the right side of each table.
Fig B16.6-1 LOAD through Fig B16.6-7 MIN T (7 sheets)	Seven summary charts (one per sheet). See Informative Annex B16, Section B16.6 or the "Figure List" sheet in RESULTS5-4.XLSX for a list of all figures with sheet tab location.
A	Unformatted raw data compilation, all programs used by tables.
Q-Chart Data	Unformatted data compilation, all programs. Used by charts.
DOE21E through EnergyPlusV10 (3 sheets)	Results sheets from each simulation program used to produce example results.

Table B10-6 Index of Sheets in RESULTS5-5FCSZ.XLSX

Sheet	Description
Read Me	General directions to using workbook.
Adding Results	Instructions for adding new results. Also has cell map to individual data items in example results and "YourData" sheets.
YourData	For inputting new simulation test results; see sheet "Adding Results" for instructions. Data input to this sheet will pass through into all tables and charts.
Title Page	Title page for printed informative example or new comparison results. Sets headers for tables and charts. See instructions on page.
Program List	List of simulation programs and organizations producing Informative Annex B16, Section B16.7.1 example results.
Table List	Listing of Informative Annex B16, Section B16.7.1 tables with workbook locations.
Figure List	Listing of Informative Annex B16, Section B16.7.1 figures with workbook locations.
Tables 1, Delta Tables 1	Formatted summary results tables, including quasi-analytical solution results and example simulation results. See Informative Annex B16, Section B16.7.1 or the "Table List" sheet in RESULTS5-5FCSZ.XLSX for a list of all tables with sheet tab and cell range location. New results (entered in sheet "YourData") automatically appear on the right side of each table.
Fig B16.7.1-1, "HeatCoil" through Fig B16.7.1-22, "Delta Econo" (22 sheets)	Twenty-two summary charts (one per sheet). See Informative Annex B16, Section B16.7.1 or the "Figure List" sheet in RESULTS5-5FCSZ.XLSX for a list of all figures with sheet tab location.
Detailed Location Results	User-definable chart tool to compare detailed results. See instructions in Cell D1 of the sheet.
Aggregate Results, Delta Results	Unformatted results and sensitivity (delta) results compilations for use in tables and charts.
QAS	Quasi-analytical solution results.
DEEAP through TRNSYS (7 sheets)	Results sheets from each simulation program used to produce example results.

Copyrighted material licensed to Sei Ito on 2020-06-26 for licensee's use only. All rights reserved. No further reproduction or distribution is permitted. Distributed by Techstreet for ASHRAE, www.techstreet.com

Table B10-7 Index of Sheets in RESULTS5-5CVVV.XLSX

Sheet	Description
Read Me	General directions to using workbook.
Adding Results	Instructions for adding new results. Also has cell map to individual data items in example results and "YourData" sheets.
YourData	For inputting new simulation test results; see sheet "Adding Results" for instructions. Data input to this sheet will pass through into all tables and charts.
Title Page	Title page for printed informative example or new comparison results. Sets headers for tables and charts. See instructions on page.
Program List	List of simulation programs and organizations producing Informative Annex B16, Section B16.7.2 example results.
Table List	Listing of Informative Annex B16, Section B16.7.2 tables with workbook locations.
Figure List	Listing of Informative Annex B16, Section B16.7.2 figures with workbook locations.
Tables 1, Delta Tables 1, Delta Tables 2	Formatted summary results tables including quasi-analytical solution results and example simulation results. See Informative Annex B16, Section B16.7.2 or the "Table List" sheet in RESULTS5-5CVVV.XLSX for a list of all tables with sheet tab and cell range location. New results (entered in sheet "YourData") automatically appear on the right side of each table.
Fig. B16.7.2-1, "TotalCoil H+C" through Fig. B16.7.2-35, "VAV dEcono" (35 sheets)	Thirty-five summary charts (one per sheet). See Informative Annex B16, Section B16.7.2 or the "Figure List" sheet in RESULTS5-5CVVV.XLSX for a list of all figures with sheet tab location.
Detailed Location Results	User definable chart tool to compare detailed results. See instructions in Cell D1 of the sheet.
Aggregate Results, Delta Results	Unformatted results and sensitivity (delta) results compilations for use in tables and charts.
QAS	Quasi-analytical solution results.
DEEAP through TRNSYS (6 sheets)	Results sheets from each simulation program used to produce example results.

Table B10-8 Index of Sheets in RESULTS7-2.XLS

Sheet	Description
Sec7-2out	Standard output report, results template for inputting new results for the program being tested; data entered here automatically flows to the "PlotData" sheet (see below).
Tables B20	Tier 1 and Tier 2 example results summary tables (See Informative Annex B20 for contents information). Results for the program being tested do not flow to this sheet.
Fig-B20-1_T1_Htg1 through Fig-B20-12_T2_dClg	Tier 1 and Tier 2 example and tested program results figures (See Informative Annex B20 for contents information). Results for the program being tested automatically flow to these figures from the "PlotData" sheet (see below). Example results shown here are automatically adjusted for seasonal comparison, for heating and cooling seasons identified by the tested software entered in sheet "Sec7-2out."
BLAST-HtgRes	BLAST 3.0 monthly and total heating loads tables, including seasonal load calculation.
BLAST-ClgRes	BLAST 3.0 monthly and total sensible cooling loads tables, including seasonal load calculation.
DOE-HtgRes	DOE2.1E monthly and total heating loads tables, including seasonal load calculation.
DOE-ClgRes	DOE2.1E monthly and total sensible cooling loads tables, including seasonal load calculation.
SRES-HtgRes	SERIRES/SUNCODE 5.7 monthly and total heating loads tables, including seasonal load calculation.
SRES-ClgRes	SERIRES/SUNCODE 5.7 monthly and total sensible cooling loads tables, including seasonal load calculation.
PlotData	Tier 1 and Tier 2 example results formatted for use as source data for charts. Seasonal results for the program being tested automatically appear in the rows labeled with the name of the tested program entered in sheet "Sec7-2out."
Season_Coeff	Heating and cooling season coefficients, automatically calculated based on user entry in sheet "Sec7-2out," cells C28, D28, C30 and C31.

Copyrighted material licensed to Sei Ito on 2020-06-26 for licensee's use only. All rights reserved. No further reproduction or distribution is permitted. Distributed by Techstreet for ASHRAE, www.techstreet.com

(This annex is not part of the standard. It is merely informative and does not contain requirements necessary for conformance to the standard. It has not been processed according to the ANSI requirements for a standard and may contain material that has not been subject to public review or a consensus process. Unresolved objectors on informative material are not offered the right to appeal at ASHRAE or ANSI.)

INFORMATIVE ANNEX B11 PRODUCTION OF EXAMPLE RESULTS FOR BUILDING THERMAL ENVELOPE AND FABRIC LOAD AND GROUND-COUPLED SLAB-ON-GRADE TESTS OF SECTION 5.2

This section describes the criteria used to select programs to produce the example results, provides details of the program versions used, and provides details of the analytical solutions.

Example results were created as part of the original research projects that developed the test cases in Section 5.2. Each project used different programs and/or program versions. Simulation programs used to develop the results were the current versions at the time of the original research; programs may have been updated since the example results were produced. For some test cases, analytical solutions or verified numerical-model results have been developed and serve as mathematical truth standards and secondary mathematical truth standards, respectively.

B11.1 Results for Building Thermal Envelope and Fabric Load Cases of Sections 5.2.1, 5.2.2, and 5.2.3. The full discussion of example results is included in *IEA BESTEST* [B-29]. Portions of that discussion have been included here.

The programs used to generate the example results for Sections 5.2.1, 5.2.2, and 5.2.3 are described in Table B11-1. Under the "computer program" column, the first entry in each cell is the proper program name and version number. The entries in parentheses are the abbreviations for the programs used in Informative Annex B8, Section B8.1, and occasionally elsewhere in the informational annexes.

The second column of Table B11-1 indicates the university or national research facility with expertise in building science that wrote the simulation software. The third column indicates the university or national research facility with expertise in building science that performed the simulations. The majority of participating organizations that performed simulations either ran software written by their organization or otherwise ran other building energy simulation software in addition to that written by their organization.

To minimize the potential for user error, when feasible more than one modeler developed input files for each program. This was done for BLAST, SERIRES, and TRNSYS. Where disagreement in the inputs or results was found, the modelers were requested to resolve the differences. Where only a single modeler was involved, it was strongly recommended that inputs be carefully checked by another modeler familiar with the program.

Where improvements to simulation programs or simulation inputs were made as a result of running the tests, such improvements must have mathematical and physical bases and must be applied consistently across tests. Also, all improvements were required to be documented in modeler reports. Arbitrary modification of a simulation program's input or internal code just for the purpose of more closely matching a given set of results was not allowed.

Input files used to generate the results are provided with the electronic files accompanying this standard; see the README*.DOCX file. **The accompanying files can be downloaded online at http://www.ashrae.org/140_2017**. The IEA participants that ran SERIRES 1.2 only provided two input files with their results. IEA participants that ran simulations for ESP, S3PAS, and TASE did not supply input files with their results.

B11.1.1 Selection of Programs for Producing Example Results. The criteria for selection of programs used for producing example results required that

a. a program be public domain, in the sense that a large portion of its development was government sponsored, and that its source code be available for scrutiny and
b. the program be a true simulation based on hourly weather data and calculational time increments of one hour or less.

The programs used to generate example results have been subjected to extensive prior validation testing. Such testing includes the preliminary trials of *IEA BESTEST* [B-29] that ran from 1991 through 1993. The programs (to various extents) were also subjected to other comparative, empirical validation and/or analytical verification tests, such as those referenced in *IEA BESTEST* and in International Building Performance Simulation Association (IBPSA) proceedings [B-47,B-48].

B11.1.2 Exclusion of Specific Results. Specific results from *IEA BESTEST* [B-29] used to develop example results were excluded according to a specific set of rules.

a. Where there is known to be a specific, identifiable, documented deficiency in a program, which impacts the results for specific cases and not for any other cases, the results for those cases were excluded.
b. If a fundamental bug or algorithmic error is suspected that affects many of the results from a particular program, then all the results from that program were excluded.
c. A significantly outlying result for a particular case must be explained/justified by the modeler, or corrected by the modeler with an explanation of the physical basis for the correction, or it was excluded.

Application of these rules resulted in the elimination of the following:

a. SERIRES 1.2 (SERIRES-BRE) [B-45] for output related to peak loads
b. TASE [B-49] results related to east and west shading devices (Cases 630 and 930)
c. Various in-depth results as noted in Table B11-2

SERIRES-BRE peak load results were excluded because the implementation of SERIRES 1.2 for producing example results did not explicitly model a pure convective thermostat as called for in Section 5.2.1.13. A convective thermostat is one that responds to pure interior air temperature (does not respond directly to infrared radiation from interior surfaces). The mathematical representation of the thermostat control temperature in the SERIRES-BRE results is closer to a radiant temperature than an air temperature. This can have a significant effect on

Copyrighted material licensed to Sei Ito on 2020-06-26 for licensee's use only. All rights reserved. No further reproduction or distribution is permitted. Distributed by Techstreet for ASHRAE, www.techstreet.com

Table B11-1 Computer Programs, Program Authors, and Producers of Example Results

Computer Program	Authoring Organization	Example Results Produced by
BLAST-3.0 level 193 v.1 (BLAST-US/IT) [B-12]	CERL [a], United States (U.S.)	NREL [b], U.S. Politecnico Torino, Italy
DOE-2.1D 14 (DOE2) [B-46]	LANL/LBNL [c], U.S.	NREL, U.S.
ESP-RV8 (ESP-DMU) [B-42]	Strathclyde University, United Kingdom (U.K.)	De Montfort University, U.K.
SERIRES/SUNCODE 5.7 (SRES/SUN) [B-24]	NREL/Ecotope, U.S.	NREL, U.S.
SERIRES 1.2 (SRES-BRE) [B-45]	NREL/BRE [d], U.S./U.K.	BRE, U.K.
S3PAS [B-50]	University of Sevilla, Spain	University of Sevilla, Spain
TASE [B-49]	Tampere University, Finland	Tampere University, Finland
TRNSYS 13.1 (TSYS-BEL/BRE) [B-51]	University of Wisconsin, U.S.	BRE, U.K. Vrije Universiteit (VUB), Brussels, Belgium

a. U.S. Army Construction Engineering Research Laboratories (CERL)
b. National Renewable Energy Laboratory (NREL)
c. Los Alamos National Laboratory/Lawrence Berkeley National Laboratory (LANL/LBNL)
d. Building Research Establishment (BRE)

peak load prediction in certain cases. In the SERIRES/SUNCODE 5.7 (SRES/SUN) [B-24] results, the pure convective thermostat is modeled by reducing the combined radiative/convective interior film coefficient from 8.29 W/(m^2·K) to a convection-only film coefficient of 3.16 W/(m^2·K). The modelers then slightly increased the thermal conductivity of the wall and roof insulation materials and increased the resistance of the floor insulation materials so that the building air-to-air heat transmission coefficient remained equivalent to that specified in Tables 5-1 and 5-11. For more discussion about this, see Section 2.5.3.3 of *IEA BESTEST* [B-29].

TASE results related to east and west shading devices (Cases 630 and 930) were also eliminated based on communications with the modeler.

For in-depth Cases 195 to 440 and 800 to 810, results are presented in Informative Annex B8 only from those simulation programs capable of explicitly modeling the effect in question. The most difficult cases were those that required variation of exterior and/or interior infrared emittance ε and those that required variation of interior shortwave absorptance α. Thus, for cases that specified interior ε = 0.1, exterior ε = 0.1, or interior α = 0.1 (Cases 195, 200, 210, 220, 280, 440, and 810), the decision to include a program's results was based on the modeling approach described by each modeler (see *IEA BESTEST* [B-29]). Where explicit modeling of the effect was internal to the program, or where the modeler documented a credible method equivalent to explicit modeling of the effect, the results were included. Table B11-2 shows those effects responsible for eliminating some of the programs ("No" = eliminated).

For Case 210, to present results required at least some sort of interior radiosity network and the ability to explicitly vary interior emittance. ESP,[B-42], BLAST [B-12], TRNSYS [B-51], and TASE[B-49] were the only programs able to meet these requirements. The TRNSYS modelers were able to do Case 210 (interior ε = 0.1) by varying the Stefan-Boltzmann constant within the context of a simplified radiosity network. The SERIRES[B-24,B-45] modelers were able to do Cases 280, 440, and 810 (cavity albedo) by externally calculating the fraction of shortwave radiation absorbed by interior surfaces based on shape factors and absorptances (SERIRES/SUNCODE 5.7) or area weighting and absorptances (SERIRES 1.2). Most of the programs were capable of explicitly modeling the remainder of the in-depth cases.

B11.1.3 Hourly Time Convention. Details of differences in modeling methods utilized by various software are given in Part II of *IEA BESTEST* [B-29]. That reference does not discuss how the specified time convention is modeled by various simulation software. For Standard 140, the time convention for the input specification and hourly outputs is standard time, while the time convention for Typical Meteorological Year (TMY) weather data is solar time (see Informative Annex A1, Section A1.5, for discussion of the difference between solar time and standard time). The time convention is therefore most correctly modeled by software that rebins TMY data into hourly data based on local standard time. A tabulation of how the time convention was modeled by some of the software used to generate the example results given in Informative Annex B8 is noted in Table B11-3.

Because software being tested by Standard 140 may not rebin TMY data, it is important to understand the potential differences in Standard 140 results that can be generated by applying a time convention different from that specified in Section 5.1.1. In Standard 140, such differences are minimized and are primarily related to the equation of time (see Normative Annex A1, Section A1.5) because the building site has been located within 0.1 degree longitude of the standard meridian. For this reason, Standard 140 does not provide a good test for the ability to calculate solar incidence angles for longitudes far away from the standard meridian.

To estimate the potential difference caused by deviating from the time convention in Section 5.1.1, a series of sensitivity tests were performed using DOE-2.1D [B-46]. In these tests, solar incidence angle calculations were intentionally distorted by specifying the longitude of the site in the input file as different from the longitude used in the TMY weather data processor. Such a site longitude shift is based on one degree of planetary rotation per four minutes and was limited to 4.3

Copyrighted material licensed to Sei Ito on 2020-06-26 for licensee's use only. All rights reserved. No further reproduction or distribution is permitted. Distributed by Techstreet for ASHRAE, www.techstreet.com

Table B11-2 Ability of Participating Computer Programs to Explicitly Model In-Depth Cases That Vary Selected Radiative Properties

Computer Program	Exterior ε = 0.1	Interior ε = 0.1	Interior α = 0.1
BLAST 3.0 level 193 v.1	No[a]	Yes	Yes
DOE-2.1D14	No	No	No
SERIRES/SUNCODE 5.7	No	No	Yes
SERIRES 1.2	No	No	Yes
ESP-RV8	Yes	Yes	Yes
S3PAS	No	No	No
TRNSYS 13.1	No	Yes	Yes
TASE	No	Yes	Yes

a. Just prior to final publication of *IEA BESTEST*, the BLAST Support Office notified the BLAST modelers of the undocumented commands for invoking BLAST's most detailed algorithm for handling of exterior surface infrared radiation exchange. This information was not available in time to revise the example results.

Table B11-3 Time Convention Models for Selected Simulation Programs

Simulation Program	Weather Data Rebinned to Local Standard Time	Solar Angle Calculations Assume Processed Weather Data Is in Standard Time
BLAST 3.0	No	Yes
DOE-2.1D	Yes	Yes
ESP-RV8	No	Yes
SERIRES/SUNCODE 5.7	No	No
TASE	No	Yes

degrees corresponding to the maximum shift that would be caused by the equation of time.

The effect of distorting the calculations was negligible (≤1%) for most outputs. The most significant potential differences identified are as follows:

a. Three percent for annual peak sensible cooling load in the east/west window cases (with or without shading present).
b. Eight percent for hourly sensible cooling loads without window shading (9% with shading present) and 8% for hourly solar transmission (with or without shading present) during hours when the equation of time causes the maximum difference between solar time and standard time occurring in February, October, and November. However, the differences for these worst-case hours cancel out on an annual basis and are not coincident with occurrence of annual peak loads so that the effect on results required to be entered in the standard output report is negligible.

Since the worst potential difference for results required to be entered in the standard output report is 3%, and that for just peak sensible cooling loads in the cases with east/west windows, it is reasonable to conclude that the potential difference in results generated for Standard 140 due to deviating from the solar time convention of the TMY weather data is negligible.

B11.2 Example Results for Ground-Coupled Slab-on-Grade Analytical Verification Tests of Section 5.2.4. An analytical solution was developed for Case GC10a (see Section B11.2.1). Verified numerical-model results were developed for all "a"-series test cases, and verified numerical-model and example simulation results were developed for all "b"-series and "c"-series test cases (see Section B11.2.2).

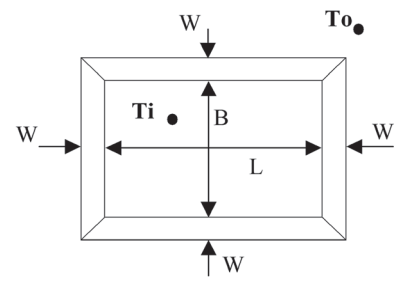

Figure B11-1 Plan view of the floor geometry.

Further details are described in the originating NREL/IEA research report [B-14].

B11.2.1 Analytical Solution for Steady-State Heat Flow through the Floor Slab (Case GC10a). For the conditions of Figure B11-1 (same as Figure 5-12), given the slab of area $L \times B$ surrounded by a perimeter surface boundary of thickness W, and assuming the surface temperature of the floor is T_i and that the temperature falls linearly across the perimeter boundary from T_i to the exterior ground surface temperature T_o, the exact solution for the problem under steady-state three-dimensional (3D) conditions can be determined [B-9]. The total heat flow through the slab into the ground is

$$q = k(T_i - T_o)\frac{1}{\pi}F(L, B, W) \qquad \text{(B11-1)}$$

where

T_i = surface temperature of the floor, °C

T_o = temperature of the outside ground, °C

k = conductivity of floor slab and soil, W/(m·K)

Copyrighted material licensed to Sei Ito on 2020-06-26 for licensee's use only. All rights reserved. No further reproduction or distribution is permitted. Distributed by Techstreet for ASHRAE, www.techstreet.com

and (L, B, W) is a function of L, B, and W in metres (m):

$$
\begin{aligned}
F(L,B,W) = {} & \left(2+\frac{L+B}{W}\right)[(L+W)^2+(B+W)^2]^{1/2} \\
& -\sqrt{2}\left(1+\frac{L}{2W}\right)[L^2+(L+2W)^2]^{1/2} \\
& -\sqrt{2}\left(1+\frac{B}{2W}\right)[B^2+(B+2W)^2]^{1/2}-\left(\frac{L+B}{W}\right)(L^2+B^2)^{1/2} \\
& +\left(\frac{L^2+B^2}{W}\right)[1+\sqrt{2}\ln(\sqrt{2}-1)]+2W[\sqrt{2}+\ln(\sqrt{2}-1)] \\
& -\frac{\sqrt{2}G^2}{W}\ln\left\{\frac{[G^2+(D+2W)^2]^{1/2}+D+2W}{(G^2+D^2)^{1/2}+D}\right\} \\
& +\left[\frac{G^2-(B+W)^2}{W}\right]\times\ln\left\{\frac{[(L+W)^2+(B+W)^2]^{1/2}+B+W}{L+W}\right\} \\
& +\left[\frac{G^2-(L+W)^2}{W}\right]\times\ln\left\{\frac{[(L+W)^2+(B+W)^2]^{1/2}+L+W}{B+W}\right\} \\
& +\left[\frac{L(2B-L)}{W}\right]\ln\left\{\frac{(L^2+B^2)^{1/2}+B}{L}\right\} \\
& +\left[\frac{B(2L-B)}{W}\right]\ln\left\{\frac{(L^2+B^2)^{1/2}+L}{B}\right\} \\
& -\left(\frac{L^2-W^2}{W}\right)\ln\left\{\frac{[W^2+(L+W)^2]^{1/2}+W}{L+W}\right\} \\
& -\left(\frac{B^2-W^2}{W}\right)\ln\left\{\frac{[W^2+(B+W)^2]^{1/2}+W}{B+W}\right\} \\
& +(2L+W)\ln\left\{\frac{[W^2+(L+W)^2]^{1/2}+L+W}{W}\right\} \\
& (2B+W)\ln\left\{\frac{[W^2+(B+W)^2]^{1/2}+B+W}{W}\right\} \\
& +\frac{\sqrt{2}L^2}{W}\ln\left\{\frac{[L^2+(L+2W)^2]^{1/2}+L+2W}{L}\right\} \\
& +\frac{\sqrt{2}B^2}{W}\ln\left\{\frac{[B^2+(B+2W)^2]^{1/2}+B+2W}{B}\right\}
\end{aligned}
\tag{B11-2}
$$

where $G = L - B$, and $D = L + B$.

B11.2.2 Development of Comparative Example Results, Ground-Coupled Slab Cases. Table B11-4 describes the models used to generate the example results for the test cases of Section 5.2.4 (see Informative Annex B8, Section B8.2).

B11.2.2.1 Selection of Programs. The selection criteria for programs used for producing example results per Section 5.2.4 were more extensive than required elsewhere in this standard. For the numerical models used to develop the verified numerical model results, the selection criteria required the following:

a. 3D modeling
b. Ability to model all boundary conditions of Case GC10a for true analytical verification
c. Adjustable node meshing
d. Adjustable duration of simulation (e.g., more than five years)
e. Adjustable convergence tolerance, where applicable
f. Adjustable ground depth and far-field dimensions
g. Calculative time increments of one hour or less
h. Meeting quasi-analytical solution definitional requirements:
    1. Calculations occur outside the environment of a whole-building energy simulation program (i.e., a means to run the slab/ground model by itself without interacting with additional calculation routines of a larger whole-building simulation)
    2. Ability to scrutinize calculations (supporting input files and detailed modeler reports provided)

For the midlevel-detailed models, the selection criteria required the following:

a. The whole-building simulation program platform be a true simulation based on hourly weather data and calculative time increments of one hour or less and be representative of the state-of-the-art in whole-building energy simulation as defined by the country making the selection.
b. The midlevel-detailed ground heat transfer model used by the whole-building simulation platform be representative of the state-of-the-art as defined by the country making the selection.

B11.2.2.2 Modeling Rules for Generating Example Results. The modeling rules were somewhat more stringent for the simulation programs used for the example results of Informative Annex B8, Section B8.2, than for a given program to be normally tested with this BESTEST suite. For the Informative Annex B8, Section B8.2, simulation results, a variety of modeling approaches was allowed. However, the cases were required to be modeled in the most detailed way possible for each simulation program. Whenever possible with all ground-coupled heat transfer models (required for verified numerical models), demonstrate that modeling is at a level of detail where including further detail yields negligible sensitivity (0.1% or lower) to results versus the previous level of detail. Sensitivity tests, when possible (required for verified numerical models), were recommended to cover at least the following aspects of the models: node mesh detail, simulation duration (for non-steady-state cases or when dynamic models are applied to steady-state cases), convergence tolerance (when applicable), and amount of ground modeled (for Case GC10a only). Such sensitivity tests were allowed to be performed for a subset of the test cases if the modeler could logically demonstrate that the appropriate level of detail identified for a given case (e.g., GC40a or GC40b) was appropriate for other cases (GC70b, etc.).

Copyrighted material licensed to Sei Ito on 2020-06-26 for licensee's use only. All rights reserved. No further reproduction or distribution is permitted. Distributed by Techstreet for ASHRAE, www.techstreet.com

Table B11-4 Ground-Coupled Slab-on-Grade Analytical Verification—Participating Organizations and Models

Analytical Solution, Case GC10a	Authoring Organization	Implemented by
Delsante, Stokes, and Walsh [B-9]	Commonwealth Scientific and Industrial Research Organisation, Australia	NREL/JNA [a,b], United States
Verified Numerical Model		
FLUENT 6.0.20	Fluent, Incorporated, United States	PAAET [c], Kuwait
MATLAB 7.0.4.365 (R14)	The MathWorks, Inc., United States	Dublin Institute of Technology, Ireland
TRNSYS 16.1	University of Wisconsin/TESS [d], United States	TESS [d], United States
Simulation Program		
BASECALC V1.0e	CETC [e], Canada	CETC [e], Canada
EnergyPlus 2.0.0.025	LBNL/UIUC/DOE-BT [f,g,h], United States	GARD Analytics, Inc., United States
ESP-r/BASESIMP	CETC/ESRU [e,i], Canada/United Kingdom	CETC [e], Canada
GHT	NREL [a], United States	NREL [a], United States
SUNREL-GC 1.14.01	NREL [a], United States	NREL [a], United States
VA114 2.20/ISO-13370	VABI Software BV, The Netherlands; CEN/ISO [j,k]	VABI Software BV, The Netherlands

a. National Renewable Energy Laboratory, United States (NREL)
b. J. Neymark & Associates, United States (JNA)
c. Public Authority for Applied Education and Training, Kuwait (PAAET)
d. Thermal Energy Systems Specialists, United States (TESS)
e. CANMET Energy Technology Centre, Natural Resources Canada, Canada (CETC)
f. Lawrence Berkeley National Laboratory, United States (LBNL)
g. University of Illinois Urbana/Champaign, United States (UIUC)
h. U.S. Department of Energy, Office of Building Technologies, Energy Efficiency and Renewable Energy, United States (DOE-BT)
i. Energy Systems Research Unit, University of Strathclyde, United Kingdom (ESRU)
j. European Committee for Standardization, Belgium (CEN)
k. International Organization for Standardization, Switzerland (ISO)

Copyrighted material licensed to Sei Ito on 2020-06-26 for licensee's use only.
All rights reserved. No further reproduction or distribution is permitted. Distributed by Techstreet for ASHRAE, www.techstreet.com

(This annex is not part of the standard. It is merely informative and does not contain requirements necessary for conformance to the standard. It has not been processed according to the ANSI requirements for a standard and may contain material that has not been subject to public review or a consensus process. Unresolved objectors on informative material are not offered the right to appeal at ASHRAE or ANSI.)

INFORMATIVE ANNEX B12
TEMPERATURE BIN CONVERSION PROGRAM

To reduce calculation time in Section 6.2.1.7.1, a computer program or spreadsheet binning function may be used. An example of such a computer program is described below.

Included with the downloadable electronic files that accompany this standard is an executable program (TMP-BIN.EXE) that may be used for sorting annual hourly temperature output into bins of 1°C. The bins range from –50°C to 99°C. The program will abort if temperatures outside this range are encountered.

The annual hourly temperature file must be sequential, and each line must not contain more than one occurrence of the temperature of interest. The program reads either free-format or formatted data. In free-format mode, the number of the column in which the data resides is needed (the program interactively explains this input). No alpha characters are allowed in the data columns in free-format mode. A line with alpha characters in the data column will be escaped.

It is advisable to use the formatted option in which alphanumeric characters prior to the data of interest are skipped over, using X format. The limitation is that the format has to be in either "F" or "E" FORTRAN formats. Even if the temperature data in the file were integers, the format has to be for a "REAL" type number. In such cases, integers must be read in "F" format with 0 digits (F3.0).

Output from the bin program is written into a file with the same name as the temperature data file but with the extension ".BND".

The program will prompt the user for input with some explanatory remarks. It displays dots after each ten lines processed to show it is running. When finished it will show the number of lines processed and the number of lines that contain errors or unreadable characters. If the number of errors is substantial, the input file and format should be corrected. Run and error information is stored in a file with the same name as the input data file but with the extension ".INF".

Copyrighted material licensed to Sei Ito on 2020-06-26 for licensee's use only.
All rights reserved. No further reproduction or distribution is permitted. Distributed by Techstreet for ASHRAE, www.techstreet.com

(This annex is not part of the standard. It is merely informative and does not contain requirements necessary for conformance to the standard. It has not been processed according to the ANSI requirements for a standard and may contain material that has not been subject to public review or a consensus process. Unresolved objectors on informative material are not offered the right to appeal at ASHRAE or ANSI.)

INFORMATIVE ANNEX B13
COP DEGRADATION FACTOR (CDF) AS A FUNCTION OF PART-LOAD RATIO (PLR)

B13.1 Derivation of CDF Based on Performance Data

Per the equipment manufacturer (D Cawley),

CDF = 1 - Cd(1-PLR), 0 <= PLR <= 1
CDF = 1, PLR => 1 (1)

where Cd is assumed constant for a given unit.

Cd can be determined from listed performance data using:

SEER = EERb (1 - 0.5Cd) which solves for Cd as,

Cd = (1 - SEER/ EERb)/ 0.5 (2)

where EERb = (Adjusted Net Total Capacity)/ (Cooling Energy Consumption) at EDB = 80 F, EWB = 67 F, ODB =82 F; listed SEER = 12.90
Adjusted Net Total Capacity (Qnetcap,adj) is used to account for fan heat assumed for gross capacity calculation being different from actual fan heat.

Note: The procedures for independently calculating Cd and EERb from measured data are given in ANSI/ ARI 210/ 240-89.

Calculations to obtain EERb

Extrapolate performance based on manufacturer data (Qnetcap,list), for EDB = 80, EWB = 67.

ODB (°F)	Total Capacities Qnetcap,list (kBtu/ h)	Qnetcap,adj (kBtu/ h)	Qcomp (kW)	Qfans (kW)	EER
90	27.6	27.9	1.79	0.34	13.13
85	28.4	28.7	1.71	0.34	14.03
					extrap
82					14.57

Eqn (2) implies Cd =	0.229

So for some points along the CDF f(PLR) linear curve using Equation (1)

PLR	CDF
1.0	1.000
0.9	0.977
0.8	0.954
0.7	0.931
0.6	0.908
0.5	0.885
0.4	0.862
0.3	0.840
0.2	0.817
0.1	0.794
0.0	0.771

cdfvplr.xls; May 14, 2001

Copyrighted material licensed to Sei Ito on 2020-06-26 for licensee's use only. All rights reserved. No further reproduction or distribution is permitted. Distributed by Techstreet for ASHRAE, www.techstreet.com

Table B13-1 Analysis of the Difference between PLR1 and PLR2 and Corresponding Resultant CDF1 and CDF2

Continuously operating fan, compressor cycling (start-up) does not create any additional fan ON time.

PLR2	CAPgtc (Btu/h)	Qgtc (Btu/h)	Pfan (Btu/h)	CDF2	Qfan (Btu/h)	Qfan/ Pfan	net refr (Btu/h)	adjnetcap (Btu/h)	PLR1 = net refr/ CAPnet	PLR2/ PLR1	CDF1	CDF2/ CDF1
0.1	100000	10000	4000	0.7939	400	0.100	9600	96000	0.1000	1.0000	0.7939	1.00000
0.5	100000	50000	4000	0.8855	2000	0.500	48000	96000	0.5000	1.0000	0.8855	**1.00000**
0.9	100000	90000	4000	0.9771	3600	0.900	86400	96000	0.9000	1.0000	0.9771	1.00000

So for E300 the ratio of net refr effect to adj net cap exactly equals the ratio of Qgtc to CAPgtc, as shown previously.

Fan cycles ON/OFF with compressor, compressor cycling creates additional fan ON time.

PLR2	CAPgtc (Btu/h)	Qgtc (Btu/h)	Pfan (Btu/h)	CDF2	Qfan (Btu/h)	Qfan/ Pfan	net refr (Btu/h)	adjnetcap (Btu/h)	PLR1 = net refr/ CAPnet	PLR2/ PLR1	CDF1	CDF2/ CDF1
0.1	100000	10000	4000	0.7939	504	0.126	9496	96000	0.0989	0.9892	0.7937	1.000312
0.35	100000	35000	4000	0.8512	1645	0.411	33355	96000	0.3474	0.9927	0.8506	1.000687
0.4	100000	40000	4000	0.8626	1855	0.464	38145	96000	0.3973	0.9934	0.8620	1.000705
0.45	100000	45000	4000	0.8741	2059	0.515	42941	96000	0.4473	0.9940	0.8734	**1.000708**
0.5	100000	50000	4000	0.8855	2259	0.565	47741	96000	0.4973	0.9946	0.8849	**1.000697**
0.55	100000	55000	4000	0.897	2453	0.613	52547	96000	0.5474	0.9952	0.8963	1.000673
0.9	100000	90000	4000	0.9771	3684	0.921	86316	96000	0.8991	0.9990	0.9769	1.000206

Notes:

1. Bold font indicates value of CDF2/CDF1 at PLR2 = 0.5 and value of PLR2 at maximum value of CDF2/CDF1.

2. For the case where the fan cycles ON/OFF with the compressor, the total fan run-time fraction, including the additional start-up run time during which no or little cooling occurs, is equal to PLR/CDF. Actually, fan heat should be slightly higher because the additional fan run time due to CDF creates a slight amount of additional fan heat that, in turn, causes slightly more additional run time. In accord with the analytical solution by Dresden University of Technology (discussed in Informative Annex B17, Section B17.1.1.2), the additional run time (fan heat) for mid-PLR Case CE170 is 0.5% greater if this effect is taken into account. Because this is a 0.5% effect on a quantity that makes up at most 4% of the total coil load (i.e., 0.02% effect overall), for the purpose of calculating CDF = *f*(PLR) it can be ignored.

For real equipment, the representation of Figure 5-15 (see Section 5.3.1.10.4.1) is reasonable for PLR greater than or equal to approximately 0.1; for PLR less than or equal to approximately 0.1, Figure 5-15 indicates less efficiency degradation than that suggested by more detailed information [B-52]. However, real equipment that cycles ON/OFF has controls that prevent operation at PLR less than or equal to approximately 0.05. Thus, for the purpose of testing the basic capability of simulation software to model part-load effects, Figure 5-15 is reasonable.

B13.2 PLR Definition Similarity. PLR in Cases CE100 through CE200 (Sections 5.3.1 and 5.3.2) is defined based on guidance from an equipment manufacturer as

$$PLR1 = Qnet/CAPnet$$

where

Qnet = net refrigeration effect

CAPnet = adjusted net total capacity

For Cases CE300 through CE545 (Sections 5.3.3 and 5.3.4), and for simulation software that generally define part-load ratio based on gross total coil load and gross total capacity, it is desirable to check the equivalence of defining PLR as

$$PLR2 = Qgtc/CAPgtc$$

where

Qgtc = gross total coil load

CAPgtc = gross total capacity

The net refrigeration effect = *Qgtc* – *Qfan*, where *Qfan* is the indoor air distribution fan heat.

For Cases CE500 through CE545 (and Cases CE100 through CE200), where the compressor and all fans cycle ON/OFF together, the net refrigeration effect is the evaporator coil load less the air distribution fan heat. For Cases CE300 through CE440, where the indoor air distribution fan is always ON, the net refrigeration effect is the evaporator coil load less the air distribution fan heat for times when the evaporator coil is removing heat.

Copyrighted material licensed to Sei Ito on 2020-06-26 for licensee's use only. All rights reserved. No further reproduction or distribution is permitted. Distributed by Techstreet for ASHRAE, www.techstreet.com

The adjusted net capacity is $CAPgtc - Pfan$, where $Pfan$ is the indoor air distribution fan rated power.

Then, for PLR1 = PLR2 to be true implies

$$Qgtc/CAPgtc = (Qgtc - Qfan)/(CAPgtc - Pfan)$$

which is true if

$$Qfan/Pfan = Qgtc/CAPgtc$$

that is, if the fan heat for a given period is the fan's run-time fraction for that period multiplied by the fan power, where $Qgtc/CAPgtc$ inherently defines the required fraction of a time period that the evaporator coil is to be removing heat at a given capacity. The above relation is true if there is no additional fan run time (and fan heat) associated with additional compressor start-up run time, which occurs during part-load operation. This is true for Cases CE300 through CE440, where the indoor fan is always ON and may be thought of as only being accounted for in the net refrigeration effect term when the coil is actually cold enough to remove heat (i.e., additional start-up run time not included). (For this discussion we are ignoring that the coil removes heat at a small rate during start-up, a rate that gradually increases until the evaporator coil temperature reaches stability.) Then, for Cases CE300 through CE440,

$$Qfan = Pfan \times \text{PLR2} = Pfan \times Qgtc/CAPgtc$$

and it would follow that PLR1 = PLR2.

For Cases CE100 through CE200, because the indoor fan cycles ON/OFF with the compressor, the net refrigeration effect was originally defined to subtract out fan heat for the time when the compressor is operating (which is longer than the time that the coil is actually removing heat at rated capacity).

For that situation, which also applies to Cases CE500 through CE545, it is useful to think of

$$Qfan/Pfan = \text{PLR/CDF}$$

However, this relation implies

$$Qfan/Pfan \neq Qgtc/CAPgtc$$

with the theoretical result that PLR1 ≠ PLR2.

An analysis of the difference between PLR1 and PLR2, and corresponding resultant CDF1 and CDF2, that could be used in evaluating part-load performance is shown in Table B13-1. This analysis applies reasonable hypothetical values of coil capacity and fan power. The analysis indicates (see far right column of Table B13-1) that the resulting difference between CDF1 and CDF2 and, therefore, the compressor energy consumptions related to applying those CDFs, is <0.1%, which is negligible. Thus, for the purpose of calculating CDF, either PLR1 or PLR2 may be used.

B13.3 Effect of Part-Load Operation on Moisture Removal. The current set of reference results applies a simplifying assumption in the test specification (see Sections 5.3.1.10.1 and 5.3.3.10.1) that, "All ... moisture that condenses on the evaporator coil … leaves the system through a condensate drain..." This simplifying assumption is common to the simulation tools used to develop the example results of Informative Annex B16. Published work [B-53] indicates that this simplification deviates from reality at a part-load condition, and especially for single-stage systems where the indoor air distribution fan operates continuously, as in Cases CE300 through CE440. This is because of latent performance degradation caused by evaporation of condensate from the evaporator coil during the compressor-OFF cycle, which effectively causes a trade-off of reduced latent capacity for increased sensible capacity (or sensible zone-load reduction) because of the evaporative cooling that results. The latent performance degradation effect is reduced when the air distribution fan cycles ON/OFF with the compressor, as in the CE100- and CE500-series cases. The researchers also note that most typical hourly whole-building energy simulation programs do not consider part-load latent performance degradation and therefore tend to overestimate moisture removal. Their article cites a study that showed 5% to 10% underprediction of relative humidity levels in a typical small-office application for a single-stage system with continuous air distribution fan operation in a humid climate. Related overprediction in energy use may be 5% to 10%. The researchers have been working to incorporate a part-load latent degradation model into EnergyPlus. One issue with the use of the model is that parameters necessary to accurately estimate latent performance degradation exist only for a limited number of cooling coils and equipment configurations. To address this, these researchers have been working to develop guidelines for selecting model parameters for a greater variety of cooling coils and equipment configurations.

Copyrighted material licensed to Sei Ito on 2020-06-26 for licensee's use only. All rights reserved. No further reproduction or distribution is permitted. Distributed by Techstreet for ASHRAE, www.techstreet.com

(This annex is not part of the standard. It is merely informative and does not contain requirements necessary for conformance to the standard. It has not been processed according to the ANSI requirements for a standard and may contain material that has not been subject to public review or a consensus process. Unresolved objectors on informative material are not offered the right to appeal at ASHRAE or ANSI.)

INFORMATIVE ANNEX B14 COOLING-COIL BYPASS FACTOR

B14.1 Introduction. Calculation techniques provided here are for illustrative purposes. Some models may have slight variations in the calculation, including the use of enthalpy ratios rather than dry-bulb temperature ratios in Equation B14-1, or different specific heat assumptions for leaving air conditions in Equation B14-3, among others.

Cooling-coil bypass factor (BF) can be thought of as the fraction of the distribution air that does not come into contact with the cooling coil; the remaining air is assumed to exit the coil at the average coil surface temperature (apparatus dew point [ADP]). BF at Air-Conditioning, Heating and Refrigeration Institute (AHRI) rating conditions is approximately

$$0.049 \le \mathrm{BF} \le 0.080$$

The uncertainty surrounding this value is illustrated in the two examples for calculating BF from given manufacturer data that are included in the rest of this annex, as well as from separate calculation results by Technische Universität Dresden (TUD). The uncertainty can be traced to the calculated ADP (56.2°F) being different from the ADP listed by the manufacturer (56.8°F). Because we have been unable to acquire the manufacturer's specific method for determining ADP, we have not been able to determine which ADP number is better. However, the manufacturer has indicated that performance data are only good to within 5% of real equipment performance. So we can hypothesize that the listed-versus-calculated ADP disagreements could be a consequence of the development of separate correlation equations for each performance parameter within the range of experimental uncertainty. Based on simulation sensitivity tests with DOE-2.1E, the above range of BF inputs causes total electricity consumption to vary by ±1%.

Calculations based on the listed performance data indicate that BF varies as a function of EDB, EWB, and ODB. Incorporate this aspect of equipment performance into your model if the software being tested allows it, using a consistent method for developing all points of the BF variation map. (Note that sensitivity tests for Cases CE100 through CE200 using DOE-2.1E indicate that assuming a constant value of BF, versus allowing BF to vary as a function of EWB and ODB, adds an additional ±1% uncertainty to the total energy consumption results for Case CE185 and less for the other cases.)

The equipment manufacturer recommends modeling the BF as independent of (not varying with) the PLR. This is because the airflow rate over the cooling coil is assumed constant when the compressor is operating (fan cycles ON/OFF with compressor).

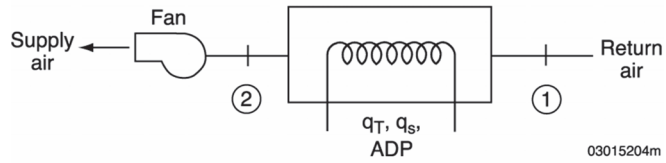

Figure B14-1 System schematic.

B14.2 Calculation of Coil Bypass Factor

B14.2.1 Nomenclature

ADP	=	apparatus dew point, °F
BF	=	bypass factor, dimensionless
cp_a	=	specific heat of dry air, Btu/lb°F
cp_w	=	specific heat of water vapor, Btu/lb°F
h_1	=	enthalpy of air entering cooling coil, Btu/lb dry air
h_2	=	enthalpy of air leaving cooling coil, Btu/lb dry air
q_s	=	gross sensible capacity, Btu/h
q_T	=	gross total capacity, Btu/h
Q	=	indoor fan airflow rate, ft^3/min
T_{db1}	=	entering dry-bulb temperature, °F
T_{db2}	=	leaving dry-bulb temperature, °F
T_{wb1}	=	entering wet-bulb temperature, °F
w	=	humidity ratio, lb water vapor/lb dry air
ρ_r	=	density of standard dry air at fan rating conditions, 0.075 lb/ft^3

B14.2.2 Known Information. AHRI conditions applied to the system schematic of Figure B14-1:

- T_{db1} = 80°F
- T_{wb1} = 67°F

From Table 5-41 at AHRI conditions,

- Q = 900 ft^3/min
- q_s = 21700 Btu/h (gross sensible capacity)
- q_T = 27900 Btu/h (gross total capacity)
- ADP = 56.8°F

B14.2.3 Governing Equations

$$\mathrm{BF} = (T_{db2} - \mathrm{ADP})/(T_{db1} - \mathrm{ADP}) \qquad \text{(B14-1)}$$ [B-54]

The following equations and related properties are commonly used approximations for working with volumetric flow rates:[B-55]

$$q_T = \rho_r Q(60\ \mathrm{min/h})\,(h_1 - h_2) \qquad \text{(B14-2)}$$

$$q_s = \rho_r Q(60\ \mathrm{min/h})(cp_a + cp_w(w))(T_{db1} - T_{db2}) \qquad \text{(B14-3)}$$

$$\rho_r = 0.075\ \mathrm{lb/ft^3}$$

$$cp_a = 0.24\ \mathrm{Btu/lb°F}$$

$$cp_w = 0.45\ \mathrm{Btu/lb°F}$$

$$w \approx 0.01\ \text{lb water vapor/lb dry air}$$

Copyrighted material licensed to Sei Ito on 2020-06-26 for licensee's use only. All rights reserved. No further reproduction or distribution is permitted. Distributed by Techstreet for ASHRAE, www.techstreet.com

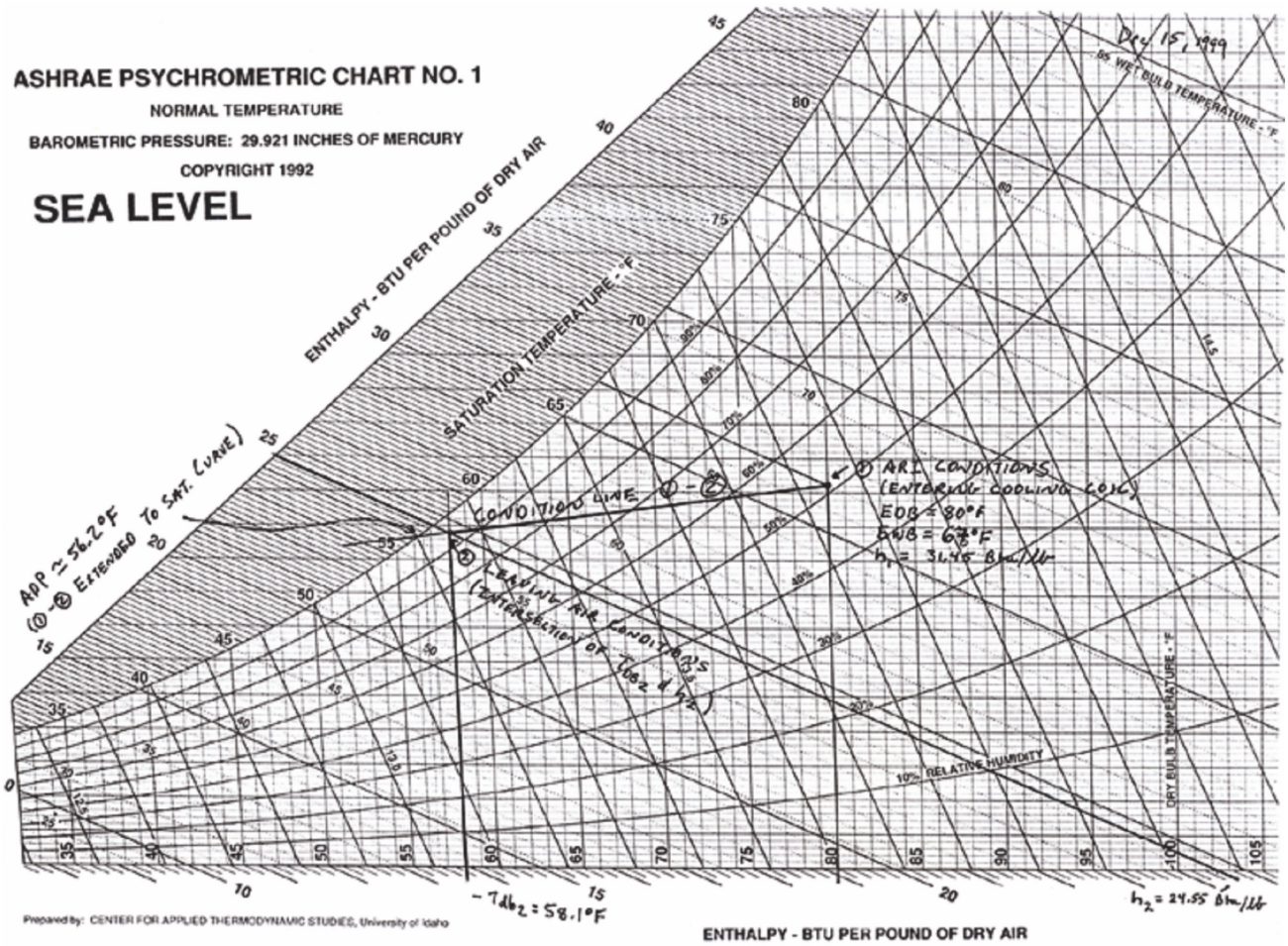

Figure B14-2 ADP calculation.

For these I-P units, Equations B14-2 and B14-3 become:

$$q_T = 4.5Q(h_1 - h_2) \qquad \text{(B14-4)}$$

$$q_s = 1.10Q(T_{db1} - T_{db2}) \qquad \text{(B14-5)}$$

B14.2.4 Solution Technique Using ADP Calculated by Extending the Condition Line to the Saturation Curve. To find ADP, extend the condition line of the system through the saturation curve on the psychrometric chart [B-56]. The condition line is the line going through coil entering conditions with slope determined by sensible heat ratio for the given operating conditions [B-54]. This example is illustrated on the psychrometric chart in Figure B14-2. To draw the condition line, State 2 must be determined; State 1 is AHRI conditions (T_{db1} = 80.0°F, T_{wb1} = 67°F). Defining State 2 requires two independent properties that can be identified from Equations B14-2 and B14-3.

Solve for h_2 using Equation B14-2 with q_T = 27,900 Btu/h and Q = 900 ft^3/min. From ideal gas equations commonly used for psychrometrics [B-32], at AHRI conditions h_1 = 31.45 Btu/lb dry air. These values applied to Equation B14-2 give the following:

$$h_2 = 24.55 \text{ Btu/lb dry air}$$

Solving for T_{db2} using Equation B14-3 with T_{db1} = 80°F, q_s = 21700 Btu/h, and Q = 900 ft^3/min gives the following:

$$T_{db2} = 58.1°\text{F}$$

On the psychrometric chart, drawing a line through these two states and extending it to the saturation curve gives the following:

$$\text{ADP} = 56.2°\text{F}$$

Solving Equation B14-1 using T_{db1} = 80°F, T_{db2} = 58.1°F, and ADP = 56.2°F gives the following:

BF = 0.080

B14.2.5 Solution Technique Using ADP Listed in Performance Data. Solving Equation B14-1 using T_{db1} = 80°F, T_{db2} = 58.1°F, and ADP = 56.8°F gives the following:

BF = 0.055

B14.2.6 B14.2.6 Solution by TUD. The TRNSYS-TUD modeler report in Part III of *HVAC BESTEST* [B-16] indicates that

BF = 0.049

This solution is based on manufacturer-listed values of ADP.

Copyrighted material licensed to Sei Ito on 2020-06-26 for licensee's use only. ALL rights reserved. No further reproduction or distribution is permitted. Distributed by Techstreet for ASHRAE, www.techstreet.com

B14.2.7 Conclusions. The BF for this system at AHRI conditions is approximately in the range of

$$0.049 \leq BF \leq 0.080$$

Some uncertainty is associated with the governing equations and related properties commonly used for calculating leaving air conditions; these equations are approximations. In addition, some uncertainty is associated with using the psychrometric chart to find the ADP (56.2°F) in the first solution. Finally, there may be additional uncertainty related to the methodology for developing ADP. For example, the results of Equation B14-1 can be slightly different if enthalpy ratios are used in place of dry-bulb temperature ratios. Also, documentation of how the manufacturer calculated its listed ADP was unavailable, and the source code for manufacturer software used to develop catalog data is proprietary.

Based on sensitivity tests with DOE-2.1E, the following apply:

a. The above range of BF inputs causes total electricity consumption to vary by ±1%.

b. Assuming a constant value of BF, versus allowing BF to vary as a function of EWB and ODB, adds an additional ±1% uncertainty to the total energy consumption results for Case CE185, and less for the other cases.

Copyrighted material licensed to Sei Ito on 2020-06-26 for licensee's use only.
All rights reserved. No further reproduction or distribution is permitted. Distributed by Techstreet for ASHRAE, www.techstreet.com

(This annex is not part of this standard. It is merely informative and does not contain requirements necessary for conformance to the standard. It has not been processed according to the ANSI requirements for a standard and may contain material that has not been subject to public review or a consensus process. Unresolved objectors on informative material are not offered the right to appeal at ASHRAE or ANSI.)

INFORMATIVE ANNEX B15
INDOOR FAN DATA EQUIVALENCE

B15.1 For Cases CE100 through CE200 (Sections 5.3.1 and 5.3.2). Fan performance data for indoor fan power (230 W) and airflow rate (900 cfm = 0.425 m^3/s) are based on dry air at standard fan rating conditions. ASHRAE defines a standard condition as 1 atm (101.325 kPa or 14.696 psi) and 68°F (20°C) with a density of 0.075 lb/ft^3 (1.204 kg/m^3) [B-55].

The fan efficiency of 0.5 is based on a discussion with the unitary system manufacturer.

The **total fan pressure** is based on [B-57] the following:

$$\text{Eff} = Q \times \Delta P / W$$

where

Q = indoor fan airflow rate, m^3/s
ΔP = total fan pressure, Pa
W = fan electric power input, W
Eff = total fan plus motor and drive efficiency (motor/drive in airstream)

Solving for ΔP,

$$\Delta P = W \times \text{Eff}/Q$$
$$= 230\ \text{W} \times 0.5/0.425\ \text{m}^3/\text{s} = \mathbf{271\ Pa = \Delta P}$$

The supply air temperature rise from fan heat is based on the following:

$$q_{fan} = \rho \times c_p \times Q \times \Delta T \times C$$

where

q_{fan} = fan heat, Btu/h (W)
ρ = standard air density, 0.075 lb/ft^3 (1.204 kg/m^3)
c_p = specific heat of air, Btu/(lb·°F) (kJ/[kg·K])
Q = indoor fan airflow rate, ft^3/min (m^3/s)
ΔT = supply air temperature rise from fan heat, °F (°C)
C = units conversion constant

Solving for ΔT,

$$\Delta T = q_{fan}/(\rho \times c_p \times Q \times C)$$

where

q_{fan} = 230 W = 785 Btu/h; Q = 900 cfm = 0.425 m^3/s
c_p = 0.24 Btu/(lb·°F) for dry air **or**
c_p = 0.2445 Btu/(lb·°F) when humidity ratio = 0.01 [B-55]

Then, ΔT = 785 Btu/h/[0.075 lb/ft^3 × 900 ft^3/min × 60 min/h × 0.2445 Btu/(lb·°F)]

$$\mathbf{\Delta T = 0.793°F\ (0.441°C)}$$

or, for c_p = 0.24 Btu/(lb·°F),

$$\mathbf{\Delta T = 0.808°F\ (0.449°C)}$$

B15.2 For Cases CE300 through CE545 (Sections 5.3.3 and 5.3.4). Fan performance data for indoor fan electric power (1242 W), mechanical shaft power (1.565 bhp = 1167 W), and airflow rate (4000 cfm = 1.888 m^3/s) are based on dry air at standard fan rating conditions. ASHRAE defines a standard condition as 1 atm (101.325 kPa or 14.696 psi) and 68°F (20°C) with a density of 0.075 lb/ft^3 (1.204 kg/m^3) [B-55].

The static pressure of 0.3 in. of water (74.7 Pa) is based on the Air-Conditioning, Heating and Refrigeration Institute (AHRI) rating condition, according to the provider of the performance data.

The **fan static efficiency** is based on the following [B-57,B-98]:

$$\text{Eff}_s = Q \times \Delta P_s / W_{sh}$$

where

Q = indoor fan airflow rate, m^3/s
ΔP_s = static fan pressure, Pa
W_{sh} = fan shaft power input, W
Eff_s = static fan efficiency

Solving for Eff_s,

$$\text{Eff}_s = 1.888\ \text{m}^3/\text{s} \times 74.7\ \text{Pa}/1167\ \text{W} = 0.121 = 12.1\%$$

The **motor/drive efficiency** is based on the following:

$$\text{Eff}_m = W_{sh}/W$$

where

Eff_m = motor/drive efficiency
W_{sh} = fan shaft power input, W
W = fan electric power input, W

Solving for Eff_m,

$$\text{Eff}_m = 1167\ \text{W}/1242\ \text{W} = 0.940 = 94.0\%$$

The **supply air temperature rise from fan heat** is based on the following:

$$q_{fan} = \rho \times c_p \times Q \times \Delta T \times C$$

where

q_{fan} = fan heat, motor/drive in airstream, Btu/h (W)
ρ = standard air density = 0.075 lb/ft^3 (1.204 kg/m^3)
c_p = specific heat of air, Btu/(lb·°F) (kJ/[kg·K])
Q = indoor fan airflow rate, ft^3/min (m^3/s)
ΔT = supply air temperature rise from fan heat, °F (°C)
C = units conversion constant

Solving for ΔT,

$$\Delta T = q_{fan}/(\rho \times c_p \times Q \times C)$$

where

q_{fan} = 1242 W = 4237 Btu/h; Q = 4000 cfm = 1.888 m^3/s
c_p = 0.24 Btu/(lb·°F) for dry air **or**
c_p = 0.2445 Btu/(lb·°F) when humidity ratio = 0.01 [B-55]

Then, ΔT = 4237 Btu/h/[0.075 lb/ft^3 × 4000 ft^3/min × 60 min/h × 0.2445 Btu/(lb·°F)]

$$\mathbf{\Delta T = 0.963°F\ (0.535°C)}$$

or for c_p = 0.24 Btu/(lb·°F),

$$\mathbf{\Delta T = 0.981°F\ (0.545°C)}$$

Copyrighted material licensed to Sei Ito on 2020-06-26 for licensee's use only. All rights reserved. No further reproduction or distribution is permitted. Distributed by Techstreet for ASHRAE, www.techstreet.com

(This annex is not part of this standard. It is merely informative and does not contain requirements necessary for conformance to the standard. It has not been processed according to the ANSI requirements for a standard and may contain material that has not been subject to public review or a consensus process. Unresolved objectors on informative material are not offered the right to appeal at ASHRAE or ANSI.)

INFORMATIVE ANNEX B16 ANALYTICAL AND QUASI-ANALYTICAL SOLUTION RESULTS AND EXAMPLE SIMULATION RESULTS FOR HVAC EQUIPMENT PERFORMANCE TESTS OF SECTIONS 5.3, 5.4, AND 5.5

B16.1 Introduction. Example results from quasi-analytical solutions and various detailed building energy simulation programs applied to the tests of Sections 5.3, 5.4, and 5.5 are presented in tabular and graphic form in the electronic media provided with this standard as follows:

a. Section 5.3 test results are included with files RESULTS5-3A.PDF and RESULTS5-3B.PDF,
b. Section 5.4 test results are included in file RESULTS5-4.PDF, and
c. Section 5.5 test results are included in files RESULTS5-5FCSZ.PDF and RESULTS5-5CVVV.PDF.

A listing of the tables and figures in these files can be found in Sections B16.5, B16.6, and B16.7. These results can be used for a comparison with the software being tested. Alternatively, a user can run a number of different programs through the standard method of test or generate their own quasi-analytical solution results and draw comparisons from those results independently or in conjunction with the results listed here. In either case, when making comparisons the user should employ the diagnostic logic presented in Informative Annex B9.

For convenience to users who wish to plot or tabulate their results along with the analytical and quasi-analytical solution results and example simulation results, the spreadsheet files RESULTS5-3A.XLSX, RESULTS5-3B.XLSX, RESULTS5-4.XLSX, RESULTS5-5FCSZ.XLSX, and RESULTS5-5CVVV.XLSX are included in the accompanying electronic media. Spreadsheet navigation instructions are included in RESULTS5-3A.DOC, RESULTS5-3B.DOC, RESULTS5-4.DOC, and RESULTS5-5.DOCX and have been printed out in Informative Annex B10, Sections B10.3, B10.4, B10.5, and B10.6, respectively, for convenience.

B16.2 Importance of Analytical and Quasi-Analytical Solution Results. The results for the HVAC equipment performance tests of Sections B16.5.1, B16.6, and B16.7 include analytical and quasi-analytical solutions. In general, it is difficult to develop worthwhile test cases that can be solved analytically or quasi-analytically, but such solutions are extremely useful when possible. Analytical or quasi-analytical solutions represent a "mathematical truth standard" or "secondary mathematical truth standard," respectively; that is, given the underlying physical assumptions in the case definitions, there is a mathematically correct solution for each case. In this context, the underlying physical assumptions regarding the HVAC equipment as defined in Cases CE100 through CE200 and HE100 through HE170 are representative of typical manufacturer data normally used by building design practitioners. Many whole-building simulation programs are designed to work with this type of data.

It is important to understand the difference between a *mathematical truth standard* or *secondary mathematical truth standard* and an *absolute truth standard*. In the former, we only test the solution process for a model, not the appropriateness of the model itself; that is, we accept the given underlying physical assumptions while recognizing that these assumptions represent a simplification of physical reality. An approximate truth standard from an experiment tests both the solution process and appropriateness of the model within experimental uncertainty. The ultimate or "absolute" validation truth standard would be comparison of simulation results with a *perfectly performed* empirical experiment, with all simulation inputs *perfectly defined*. In reality, an experiment is performed and the experimental object is specified within some acceptable range of uncertainty. Such experiments are possible but expensive. We recommend developing a set of empirical validation experiments in the future.

The analytical and quasi-analytical solution results presented in selected parts of Annex B16 represent a mathematical and secondary mathematical truth standard, respectively. This allows identification of bugs in the software that would not otherwise be apparent from comparing software only to other software and therefore improves the diagnostic capabilities of the test procedure. Further discussion of how quasi-analytical and analytical solutions were developed is included in Informative Annex B17. Further discussion of overall validation methodology is included in Informative Annex B23 of this standard and in the 2017 *ASHRAE Handbook—Fundamentals* [B-101], Chapter 19, Section 8.

B16.3 Example Simulation Results. The building energy simulation computer programs used to generate example results are described in Informative Annex B17.

B16.3.1 Results for Analytical Verification Tests

B16.3.1.1 Because the analytical and quasi-analytical solution results constitute a reliable set of theoretical results (a mathematical truth standard or secondary mathematical truth standard, respectively), the primary purpose of including simulation results for the CE100 through CE200, HE100 through HE170, and AE101 through AE445 cases in Sections B16.5.1, B16.6, and B16.7 is to allow simulationists to compare their relative agreement (or disagreement) versus the quasi-analytical and analytical solution results to that for other simulation results. Perfect agreement among simulations and analytical or quasi-analytical solutions is not necessarily expected. The results give an indication of the degree of agreement that is possible between simulation results and the analytical or quasi-analytical solution results.

B16.3.1.2 Because the physical assumptions of a simulation may be different from those for the analytical or quasi-analytical solutions, a tested program may disagree with such solutions without necessarily being incorrect. However, it is worthwhile to investigate the sources of the differences.

Copyrighted material licensed to Sei Ito on 2020-06-26 for licensee's use only. All rights reserved. No further reproduction or distribution is permitted. Distributed by Techstreet for ASHRAE, www.techstreet.com

B16.3.2 Results for Comparative Tests. The computer programs used to generate example results for Section B16.5.2 have been subjected to a number of analytical verification, empirical validation, and comparative testing studies. However, there is no such thing as a completely validated building energy simulation computer program. All building models are simplifications of reality. The philosophy here is to generate a range of results from several programs that are generally accepted as representing the state-of-the-art in whole-building energy simulation programs. Regarding the presented results, input errors or differences have been eliminated to the extent possible. Thus, for a given case, the range of differences between results presented in Section B16.5.2 represents algorithmic differences among these computer programs for comparative space-cooling equipment tests. For any given case, a tested program may fall outside the range of given example results without necessarily being incorrect. Also, for any given case, a program that yields values in the middle of the range of the example results should not be perceived as better or worse than a program that yields values at the borders of the range.

B16.3.3 General Comments Regarding Simulation Results

B16.3.3.1 It is worthwhile to investigate the source of differences for a given set of simulation results in both the analytical verification and comparative tests because the collective experience of the authors of this standard is that such differences often indicate problems with the software or its usage, including, but not limited to the following:

a. User input error, where the user misinterpreted or mis-entered one or more program inputs
b. Inadequate or faulty documentation
c. A problem with a particular algorithm in the program
d. One or more program algorithms used outside their intended range

B16.3.3.2 For generating example simulation results presented in this annex, along with using consistent modeling methods, simulationists were requested to use the most detailed modeling methods their software allows. The example simulation results were the product of numerous iterations to incorporate clarifications to the test specification, simulation input file corrections, and simulation software improvements. Where improvements to simulation programs or simulation inputs were made as a result of running the tests, such improvements must have mathematical and physical bases and must be applied consistently across tests. Arbitrary modification of a simulation program's input or internal code just for the purpose of more closely matching a given set of results is not allowed. For a summary of how quasi-analytical solution and simulation results were developed see Informative Annex B17. For more detailed information about these results see *HVAC BESTEST*, Volume 1,[B-16] *HVAC BESTEST*, Volume 2,[B-17] *HVAC BESTEST for Fuel-Fired Furnaces*[B-58], and *Airside HVAC BESTEST Volume 1* [B-6].

B16.3.3.3 For consistent numbering of test cases within the standard, case numbers used for the mechanical equipment tests in Sections 5.3 and 5.4 have been changed from the numbering used in the original research reports where the test specifications were developed. For example, in Section 5.3.1, "Case CE100" was named "Case E100" in the original research.

B16.4 Nomenclature. Abbreviations and acronyms used in the results tables and figures are defined below. Results are grouped by case numbers, e.g., "CE100" is Case CE100 (Section 5.3.1). Sensitivity results are listed using two case numbers separated by a minus sign, e.g., "CE110 – 100" is the difference between Case CE110 (Section 5.3.2.1.1) and Case CE100. Some cases are denoted with a case number followed by "as" and a number denoting another case. This indicates the case is similar to the "as" case except for the noted changes.

AAON	AAON, Inc.; software developer and modeler
abs.	absolute value
Analytical	quasi-analytical solution
Apr.	April
AHRI	Air-Conditioning, Heating, and Refrigeration Institute
ARI	Air-Conditioning and Refrigeration Institute (now AHRI)
Aug.	August
CA-SIS	CA-SIS VI (see Table B17-1); simulation model
CETC	CANMET Energy Technology Centre, Natural Resources Canada, Canada; modeler
CIEMAT	Centro de Investigaciones Energeticas, Medioambientales y Technologicas; modeler
Circ.	circulation
CLM2000	CLIM2000 2.1.6 (see Table B17-1); simulation model
CODYRUN	CODYRUN/LGIMAT (see Table B17-2); simulation model
Comp.	compressor
Compr.	compressor
COP	coefficient of performance
COP2	alternative coefficient of performance; see Section 3.1
Ctrl.	control
CV	constant-volume terminal reheat system (see Section 5.5.3)
DB econo	economizer with return-air comparative dry-bulb temperature control
Dec.	December
DEEAP	Detailed Energy and Economic Analysis Program version 1.1.2

Copyrighted material licensed to Sei Ito on 2020-06-26 for licensee's use only. All rights reserved. No further reproduction or distribution is permitted. Distributed by Techstreet for ASHRAE, www.techstreet.com

	(see Table B17-13); simulation model
Del.	difference between listed cases (sensitivity)
Delta	difference between listed cases (sensitivity)
DeST	Designer's Simulation Toolkit version 2.0 (see Table B17-13); simulation model
DOE21E	DOE-2.1E ESTSC version-088 or DOE-2.1E JJHirsch version-133 (see Table B17-1) (for Section B16.5.1); simulation model
DOE21E-E	DOE-2.1E ESTSC version 120 (see Table B17-2) (for Section B16.5.2); simulation model
DOE-2.1E	DOE-2.1E ESTSC version-088 (see Table B17-1) (for Section B16.5.1), or DOE-2.1E JJHirsch version-133 (see Tables B17-1 and B17-3) (for Sections B16.5.1 and B16.6); simulation model
DOE-2.1E-E	DOE-2.1E, ESTSC version 120 (see Table B17-2) (for Section B16.5.2); simulation model
DOE-2.2	DOE-2.2 version NT42j (see Table B17-2) (for Section B16.5.2), or DOE-2.2 version 48l (see Table B17-13) (for Sections B16.7.1 and B16.7.2); simulation model
dry	dry coil
Ec.	economizer
Econo	economizer
EDB	dry-bulb temperature of cooling coil entering air
EDF	Electricité de France
eff.	efficient
E+	EnergyPlus 1.0.0.023 (see Table B17-1) (for Section B16.5.1); simulation model
EnergyPlus	EnergyPlus 1.0.0.023 (see Table B17-1) (for Section B16.5.1), EnergyPlus 1.10.020 (see Table B17-2) (for Section B16.5.2), EnergyPlus 1.0.2.008 (see Table B17-3) (for Section B16.6), or EnergyPlus 8.2.0 (see Table B17-13) (for Sections B16.7.1 and B16.7.2); simulation model
Enth.	enthalpy
Enth. Eco	economizer with return-air comparative enthalpy control
ESP-r/HOT3000	ESP-r/HOT3000 (see Table B17-2) (for Section B16.5.2) ESP-r/HOT3000 version 1.7 (see Table B17-3) (for Section B16.6); simulation model
EWB	wet-bulb temperature of cooling coil entering air
FC	fan-coil system (see Section 5.5.1)
Feb.	February
GARD	GARD Analytics, Inc.; modeler
gda	grams dry air
h	hour
hi.	high
HOT3000	see *ESP-r/HOT3000*; simulation model
HTAL1	quasi-analytical solution with ideal controller by Hochschule Technik and Architektur Luzern
HTAL2	quasi-analytical solution with realistic controller model by Hochschule Technik & Architektur Luzern
Hum.	humidity
IDB	indoor dry-bulb temperature
IES	Integrated Environmental Solutions, Ltd., software developer and modeler
IES-VE	Integrated Environmental Solutions-Virtual Environment version <VE>2014 Feature Pack 2 (see Table B17-13); simulation model
Inf., Infl.	infiltration
Jan.	January
Jul.	July
Jun.	June
kgda	kilograms dry air
kWh	kilowatt hours
kWh,e	kilowatt hours, electrical
kWh,th	kilowatt hours, thermal
lat.	latent internal gains
LBNL	Lawrence Berkeley National Laboratory; modeler
LCEM	Life Cycle Energy Management version 3.10 (see Table B17-13); simulation model
Lim.	limit
lo.	low
m	midrange

Copyrighted material licensed to Sei Ito on 2020-06-26 for licensee's use only. All rights reserved. No further reproduction or distribution is permitted. Distributed by Techstreet for ASHRAE, www.techstreet.com

Mar	March
Max.	maximum
Min.	minimum
MLIT	Ministry of Land, Infrastructure, Transportation and Tourism, Japan; software developer
Nov.	November
NRCan	Natural Resources Canada, also see *CETC*; modeler
NREL	National Renewable Energy Laboratory; modeler for Sections B16.5.1, B16.5.2, B16,7.1, and B16.7.2; quasi-analytical solution developer for Sections B16.7.1 and B16.7.2
OA	outdoor (outside) air
Oct	October
OD	outdoor
ODB	outdoor dry-bulb temperature
OHR	outdoor humidity ratio
Org	generic placeholder for additional modeler identification
Org.	organization
PL	part-load ratio
PLR	part-load ratio
Prg.	simulation program
PSU	The Pennsylvania State University; quasi-analytical solution developer
QAS	quasi-analytical solution (see Table B17-13)
Qcoil,lat	latent coil load
Qcoil,s	sensible coil load
Qcoil,t	total sensible + latent coil load
Qcomp	compressor electric energy
Q ID fan	indoor fan electric energy
Q OD fan	outdoor fan electric energy
Qtot	total electric energy of compressor + both fans
sens.	sensible internal gains
Sep.	September
SHR	sensible heat ratio
SH	sensible heat ratio
SZ	single-zone system (see Section 5.5.2)
T	temperature
TAMU	Texas A&M University; quasi-analytical solution developer
Temp.	temperature
TESS	Thermal Energy System Specialists; software developer and modeler
TestedPrg	generic placeholder for additional simulation model
TRNSYS	TRNSYS-TUD (see Table B17-2) (for Section B16.5.2), or TRNSYS with TESS Libraries version 17.01.0028 (see Table B17-13) (for Sections B16.7.1 and B16.7.2); simulation model
TRN-id, TRNSYS-ideal	TRNSYS-TUD with ideal controller (see Table B17-1); simulation model
TRN-re, TRNSYS-real	TRNSYS-TUD with realistic controller (see Table B17-1); simulation model
Tsinghua U	Tsinghua University; software developer and modeler
Tstat	thermostat
TTE	Takasago Thermal Engineering; modeler
TUD	Technische Universitat Dresden; modeler
UR	University of Reunion Island; modeler
v	versus
w/	with
VAV	variable-air-volume terminal reheat system (see Section 5.5.4)
Wh	watt hours
Wh,e	watt hours, electrical
Wh,th	watt hours, thermal
×	multiplied by
@	at
50/50	50% outdoor air, 50% infiltration air

B16.5 Tables and Graphs of Example Results for Space-Cooling Equipment Cases CE100 through CE545

B16.5.1 Analytical Verification Test Results, Cases CE100 through CE200. The example results tables and figures shown in Tables B16-1 and B16-2 are included in the files RESULTS5-3A.PDF and RESULTS5-3A.XLSX. Tables and figures appear sequentially in the PDF results file. In Tables B16-1 and B16-2, "Sheet Tab" and "Cell Range" are provided for users working with the RESULTS5-3A.XLSX file. Tables and figures include both example simulation and quasi-analytical solution results.

B16.5.2 Comparative Test Results, Cases CE300 through CE545. The example simulation results tables and figures shown in Tables B16-3 and B16-4 are included in the files RESULTS5-3B.PDF and RESULTS5-3B.XLSX. Tables and figures appear sequentially in the PDF file. In Tables B16-3

Copyrighted material licensed to Sei Ito on 2020-06-26 for licensee's use only. All rights reserved. No further reproduction or distribution is permitted. Distributed by Techstreet for ASHRAE, www.techstreet.com

and B16-4, the "Sheet Tab" and "Cell Range" columns are provided for users working with the RESULTS5-3B.XLSX file.

B16.6 Tables and Graphs of Example Result for Space-Heating Equipment Cases HE100 through HE230. The example results tables and figures shown in Tables B16-5 and B16-6 are included in the files RESULTS5-4.PDF and RESULTS5-4.XLSX. Tables and figures appear sequentially in the PDF file. In Tables B16-5 and B16-6, the "Sheet Tab" and "Cell Range" columns are provided for users working with the RESULTS5-4.XLSX file. Tables and figures include example simulation, analytical solution, and quasi-analytical solution results.

B16.7 Tables and Graphs of Example Results for Air-Side HVAC Equipment Cases AE101 through AE445

B16.7.1 Analytical Verification Test Results FC and SZ systems, Cases AE101 through AE245. The example results tables and figures listed in Tables B16-7 and B16-8 are included in the files RESULTS5-5FCSZ.PDF and RESULTS5-5FCSZ.XLSX. Tables and figures appear sequentially in the PDF results file. In Tables B16-7 and B16-8, Sheet Tab and Cell Range are provided for users working with the RESULTS5-5FCSZ.XLSX file. Tables and figures include both example simulation and quasi-analytical solution results. Numeric values listed in the chart x-axis labels as "value/value" (e.g., "29.4/2.4") are outdoor dry-bulb and outdoor dew-point temperatures, respectively.

B16.7.2 Analytical Verification Test Results CV and VAV systems, Cases AE301 through AE445. The example results tables and figures listed in Tables B16-9 and B16-10 are included in the files RESULTS5-5CVVV.PDF and RESULTS5-5CVVV.XLSX. Tables and figures appear sequentially in the PDF results file. In Tables B16-9 and B16-10, Sheet Tab and Cell Range are provided for users working with the RESULTS5-5CVVV.XLSX file. Tables and figures include both example simulation and quasi-analytical solution results. Numeric values listed in the chart x-axis labels as "value/value" (e.g., "29.4/2.4") are outdoor dry-bulb and outdoor dew-point temperatures, respectively.

Copyrighted material licensed to Sei Ito on 2020-06-26 for licensee's use only.
All rights reserved. No further reproduction or distribution is permitted. Distributed by Techstreet for ASHRAE, www.techstreet.com

Table B16-1 B16.5.1 Tables

Table	Description	Sheet Tab	Cell Range
Table B16.5.1-1	Space Cooling Electricity Consumption	Q-Prt1	A7–Q76
Table B16.5.1-2	COP: Mean, and (Max. – Min.)/Mean	Q-Prt2	A7–Q42
Table B16.5.1-3	Coil Loads: Total, Sensible, and Latent	Q-Prt3	A7–Q59
Table B16.5.1-4	Sensible Coil Load minus Zone Load (Fan Heat)		A60–Q78
Table B16.5.1-5	Zone Loads: Total, Sensible, and Latent	Q-Prt4	A7–Q59
Table B16.5.1-6	Latent Coil Load Minus Zone Load (Should be 0)		A60–Q78
Table B16.5.1-7	Sensitivities for Space Cooling Electricity Consumption	Q-Prt5	A7–Q96
Table B16.5.1-8	Sensitivities for COP and Coil Loads	Q-Prt6	A7–Q96
Table B16.5.1-9	Indoor Dry-bulb Temperature: Mean and (Max. – Min.)/Mean	Q-Prt7	A7–Q41
Table B16.5.1-10	Humidity Ratio: Mean and (Max. – Min.)/Mean		A43–Q78

Table B16-2 B16.5.1 Figures

Figure	Title	Sheet Tab
B16.5.1-1	HVAC BESTEST: Mean COP	Fig B16.5.1-1 COP
B16.5.1-2	HVAC BESTEST: (Max. – Min.)/Mean COP	Fig B16.5.1-2 COPvar
B16.5.1-3	HVAC BESTEST: Mean COP Sensitivities	Fig B16.5.1-3 delCOP
B16.5.1-4	HVAC BESTEST: Total Space Cooling Electricity Consumption	Fig B16.5.1-4 Qtot
B16.5.1-5	HVAC BESTEST: Total Space Cooling Electricity Sensitivities	Fig B16.5.1-5 dQtot
B16.5.1-6	HVAC BESTEST: Compressor Electricity Consumption	Fig B16.5.1-6 Qcomp
B16.5.1-7	HVAC BESTEST: Total Compressor Electricity Sensitivities	Fig B16.5.1-7 dQcomp
B16.5.1-8	HVAC BESTEST: Total Indoor (Supply) Fan Electricity Consumption	Fig B16.5.1-8 Qidfan
B16.5.1-9	HVAC BESTEST: Indoor (Supply) Fan Electricity Sensitivities	Fig B16.5.1-9 dQidfan
B16.5.1-10	HVAC BESTEST: Outdoor (Condenser) Fan Electricity Consumption	Fig B16.5.1-10 Qodfan
B16.5.1-11	HVAC BESTEST: Outdoor (Condenser) Fan Electricity Sensitivities	Fig B16.5.1-11 dQodfan
B16.5.1-12	HVAC BESTEST: Total Coil Load	Fig B16.5.1-12 QCtot
B16.5.1-13	HVAC BESTEST: Total Coil Load Sensitivities	Fig B16.5.1-13 dQCtot
B16.5.1-14	HVAC BESTEST: Sensible Coil Load	Fig B16.5.1-14 QCsens
B16.5.1-15	HVAC BESTEST: Sensible Coil Load Sensitivities	Fig B16.5.1-15 dQCsens
B16.5.1-16	HVAC BESTEST: Latent Coil Load	Fig B16.5.1-16 QClat
B16.5.1-17	HVAC BESTEST: Latent Coil Load Sensitivities	Fig B16.5.1-17 dQClat
B16.5.1-18	HVAC BESTEST: Mean Indoor Dry-Bulb Temperature	Fig B16.5.1-18 IDB
B16.5.1-19	HVAC BESTEST: (Max. – Min.)/Mean Indoor Dry-Bulb Temperature	Fig B16.5.1-19 IDBvar
B16.5.1-20	HVAC BESTEST: Mean Indoor Humidity Ratio	Fig B16.5.1-20 Humrat
B16.5.1-21	HVAC BESTEST: (Max. – Min.)/Mean Indoor Humidity Ratio	Fig B16.5.1-21Humratvar
B16.5.1-22	HVAC BESTEST: Total Zone Load	Fig B16.5.1-22 QZtot
B16.5.1-23	HVAC BESTEST: Sensible Zone Load	Fig B16.5.1-23 QZsens
B16.5.1-24	HVAC BESTEST: Latent Zone Load	Fig B16.5.1-24 QZlat
B16.5.1-25	HVAC BESTEST: Sensible Coil Load – Zone Load (Fan Heat)	Fig B16.5.1-25 QZfan
B16.5.1-26	HVAC BESTEST: Latent Coil Load – Latent Zone Load (Should = 0)	Fig B16.5.1-26 QCL-QZL

Copyrighted material licensed to Sei Ito on 2020-06-26 for licensee's use only. All rights reserved. No further reproduction or distribution is permitted. Distributed by Techstreet for ASHRAE, www.techstreet.com

Table B16-3 B16.5.2 Tables

Table	Description	Sheet Tab	Cell Range
B16.5.2-1	Annual Space Cooling Electricity Consumption (Total, Compressor)	Table-Q	A7–O56
B16.5.2-2	Annual Space Cooling Electricity Consumption (Supply Fan, Condenser Fan)		A57–O106
B16.5.2-3	Weather Data Checks, CE300 Only		A109–O119
B16.5.2-4	Annual Space Cooling Coil Loads (Total, Sensible)		A120–O169
B16.5.2-5	Annual Space Cooling Coil Loads (Latent)		A170–O195
B16.5.2-6	Various Annual Means (COP2, IDB)		A196–O245
B16.5.2-7	Various Annual Means (Humidity Ratio, Relative Humidity)		A246–O295
B16.5.2-8	*f*(ODB) Sensitivities, CE500 and CE530, April 30 and June 25 (Energy, Coil Loads)		A296–O349
B16.5.2-9	*f*(ODB) Sensitivities, CE500 and CE530, April 30 and June 25 (COP2, Zone Conditions)		A350–O382
B16.5.2-10	Hourly Integrated Maxima (Total Cooling-System Energy Consumption and Total Coil Load)	Table-R	A7–AB54
B16.5.2-11	Hourly Integrated Maxima (Sensible Coil Load and Latent Coil Load)		A55–AB102
B16.5.2-12	Hourly Integrated Maxima and Minima (COP2)		A103–AB150
B16.5.2-13	Hourly Integrated Maxima and Minima (IDB)		A151–AB198
B16.5.2-14	Hourly Integrated Maxima and Minima (Zone Humidity Ratio)		A199–AB246
B16.5.2-15	Hourly Integrated Maxima and Minima (Relative Humidity)		A247–AB295
B16.5.2-16	June 28 Hourly Output—Case CE300	Table-S	A7–M215
	TRNSYS-TUD		A7–M35
	DOE-2.2		A39–M65
	DOE-2.1E-E		A69–M95
	ENERGYPLUS		A99–M126
	CODYRUN		A129–M155
	HOT3000		A159–M185
	Tested Program		A189–M215
B16.5.2-17	Delta Annual Space Cooling Electricity Consumptions (Total, Compressor)	Table-T	A7–O50
B16.5.2-18	Delta Annual Space Cooling Electricity Consumptions (Fans)		A52–O95
B16.5.2-19	Delta Annual Cooling-Coil Loads		A100–O143
B16.5.2-20	Delta Various Annual Means (COP2, IDB)		A146–O189
B16.5.2-21	Delta Various Annual Means (Zone Humidity, Relative Humidity)		A192–O235
B16.5.2-22	Delta Hourly Integrated Maximum Total Consumptions		A243–O265
B16.5.2-23	Delta Hourly Integrated Maximum Coil Loads (Total, Sensible)		A267–O310
B16.5.2-24	Delta Hourly Integrated Maximum Coil Loads (Latent)		A311–O333
B16.5.2-25	Delta Hourly Integrated Maximum and Minimum COP2		A336–O379
B16.5.2-26	Delta Hourly Integrated Maximum and Minimum IDB		A381–O424
B16.5.2-27	Delta Hourly Integrated Maximum and Minimum Zone Humidity Ratio		A426–O469
B16.5.2-28	Delta Hourly Integrated Maximum and Minimum Zone Relative Humidity		A471–O514

Copyrighted material licensed to Sei Ito on 2020-06-26 for licensee's use only.
All rights reserved. No further reproduction or distribution is permitted. Distributed by Techstreet for ASHRAE, www.techstreet.com

Table B16-4 B16.5.2 Figures

Figure	Title	Sheet Tab
B16.5.2-1	HVAC BESTEST: CE300–CE545 Annual Total Electricity Consumption	Fig B16.5.2-1 Qtot
B16.5.2-2	HVAC BESTEST: CE300–CE545 Annual Total Space Cooling Electricity Consumption Sensitivities	Fig B16.5.2-2 dQtot
B16.5.2-3	HVAC BESTEST: CE300–CE545 Peak Hour Total Electricity Consumption	Fig B16.5.2-3 Ptot
B16.5.2-4	HVAC BESTEST: CE300–CE545 Hourly Maximum Total Space Cooling Consumption Sensitivities	Fig B16.5.2-4 dPtot
B16.5.2-5	HVAC BESTEST: CE300–CE545 Annual Compressor Electricity Consumption	Fig B16.5.2-5 Qcomp
B16.5.2-6	HVAC BESTEST: CE300–CE545 Annual Compressor Electricity Consumption Sensitivities	Fig B16.5.2-6 dQcomp
B16.5.2-7	HVAC BESTEST: CE300–CE545 Annual Indoor (Supply) Fan Electricity Consumption	Fig B16.5.2-7 Qidfan
B16.5.2-8	HVAC BESTEST: CE300–CE545 Annual Indoor (Supply) Fan Electricity Consumption Sensitivities	Fig B16.5.2-8 dQidfan
B16.5.2-9	HVAC BESTEST: CE300–CE545 Annual Outdoor (Condenser) Fan Electricity Consumption	Fig B16.5.2-9 Qodfan
B16.5.2-10	HVAC BESTEST: CE300–CE545 Annual Outdoor (Condenser) Fan Electricity Consumption Sensitivities	Fig B16.5.2-10 dQodfan
B16.5.2-11	HVAC BESTEST: CE300–CE545 Annual Total Coil Load	Fig B16.5.2-11 QCtot
B16.5.2-12	HVAC BESTEST: CE300–CE545 Peak Hour Total Coil Load	Fig B16.5.2-12 PCtot
B16.5.2-13	HVAC BESTEST: CE300–CE545 Hourly Maximum Total Coil Load Sensitivities	Fig B16.5.2-13 dPCtot
B16.5.2-14	HVAC BESTEST: CE300–CE545 Annual Sensible Coil Load	Fig B16.5.2-14 QCSens
B16.5.2-15	HVAC BESTEST: CE300–CE545 Annual Sensible Cooling Load Sensitivities	Fig B16.5.2-15 dQCsens
B16.5.2-16	HVAC BESTEST: CE300–CE545 Peak Hour Sensible Coil Load	Fig B16.5.2-16 PCSens
B16.5.2-17	HVAC BESTEST: CE300–CE545 Annual Latent Coil Load	Fig B16.5.2-17 QClat
B16.5.2-18	HVAC BESTEST: CE300–CE545 Annual Latent Cooling Load Sensitivities	Fig B16.5.2-18 dQClat
B16.5.2-19	HVAC BESTEST: CE300–CE545 Peak Hour Latent Coil Load	Fig B16.5.2-19 PClat
B16.5.2-20	HVAC BESTEST: CE300–CE545 Hourly Maximum Latent Coil Load Sensitivities	Fig B16.5.2-20 dPClat
B16.5.2-21	HVAC BESTEST: CE300–CE545 Annual Mean COP2	Fig B16.5.2-21 COP2
B16.5.2-22	HVAC BESTEST: CE300–CE545 Annual Mean COP2 Sensitivities	Fig B16.5.2-22 dCOP2
B16.5.2-23	HVAC BESTEST: CE300–CE545 Hourly Maximum COP2	Fig B16.5.2-23 MxCOP2
B16.5.2-24	HVAC BESTEST: CE300–CE545 Hourly Maximum COP2 Sensitivities	Fig B16.5.2-24 dMxCOP2
B16.5.2-25	HVAC BESTEST: CE300–CE545 Hourly Minimum COP2	Fig B16.5.2-25 MnCOP2
B16.5.2-26	HVAC BESTEST: CE300–CE545 Hourly Minimum COP2 Sensitivities	Fig B16.5.2-26 dMnCOP2
B16.5.2-27	HVAC BESTEST: CE300–CE545 Annual Mean Indoor Dry-Bulb Temperature	Fig B16.5.2-27 IDB
B16.5.2-28	HVAC BESTEST: CE300–CE545 Annual Mean IDB Sensitivities	Fig B16.5.2-28 dIDB
B16.5.2-29	HVAC BESTEST: CE300–CE545 Hourly Maximum Indoor Dry-Bulb Temperature	Fig B16.5.2-29 MxIDB
B16.5.2-30	HVAC BESTEST: CE300–CE545 Hourly Maximum Indoor Dry-Bulb Sensitivities	Fig B16.5.2-30 dMxIDB
B16.5.2-31	HVAC BESTEST: CE300–CE545 Hourly Minimum Indoor Dry-Bulb Temperature	Fig B16.5.2-31 MnIDB
B16.5.2-32	HVAC BESTEST: CE300–CE545 Annual Mean Zone Humidity Ratio	Fig B16.5.2-32 Humrat
B16.5.2-33	HVAC BESTEST: CE300–CE545 Annual Mean Humidity Ratio Sensitivities	Fig B16.5.2-33 dHumrat
B16.5.2-34	HVAC BESTEST: CE300–CE545 Hourly Maximum Zone Humidity Ratio	Fig B16.5.2-34 MxHum
B16.5.2-35	HVAC BESTEST: CE300–CE545 Hourly Maximum Humidity Ratio Sensitivities	Fig B16.5.2-35 dMxHumrat

Copyrighted material licensed to Sei Ito on 2020-06-26 for licensee's use only.
All rights reserved. No further reproduction or distribution is permitted. Distributed by Techstreet for ASHRAE, www.techstreet.com

Table B16-4 B16.5.2 Figures *(Continued)*

Figure	Title	Sheet Tab
B16.5.2-36	HVAC BESTEST: CE300–CE545 Hourly Minimum Zone Humidity Ratio	Fig B16.5.2-36 MnHum
B16.5.2-37	HVAC BESTEST: CE300–CE545 Annual Mean Relative Humidity	Fig B16.5.2-37 RelHum
B16.5.2-38	HVAC BESTEST: CE300–CE545 Annual Mean Relative Humidity Sensitivities	Fig B16.5.2-38 dRelHum
B16.5.2-39	HVAC BESTEST: CE300–CE545 Hourly Maximum Zone Relative Humidity	Fig B16.5.2-39 MxRelHum
B16.5.2-40	HVAC BESTEST: CE300–CE545 Hourly Maximum Relative Humidity Sensitivities	Fig B16.5.2-40 dMxRelHum
B16.5.2-41	HVAC BESTEST: CE300–CE545 Hourly Minimum Zone Relative Humidity	Fig B16.5.2-41 MnRelHum
B16.5.2-42	HVAC BESTEST: *f*(ODB) for CE500, CE530 Specific Day Electricity Consumptions	Fig B16.5.2-42 Qf(ODB)
B16.5.2-43	HVAC BESTEST: *f*(ODB) for CE500, CE530 Specific Day Coil Loads	Fig B16.5.2-43 QCf(ODB)
B16.5.2-44	HVAC BESTEST: *f*(ODB) for CE500, CE530 Specific Day COP2	Fig B16.5.2-44 COP2f(ODB)
B16.5.2-45	HVAC BESTEST: *f*(ODB) for CE500, CE530 Specific Day Humidity Ratio	Fig B16.5.2-45 Humratf(ODB)
B16.5.2-46	HVAC BESTEST: CE300 June 28 Hourly Electricity Consumption	Fig B16.5.2-46 HrQ
B16.5.2-47	HVAC BESTEST: CE300 June 28 Hourly Coil Loads	Fig B16.5.2-47 HrQC
B16.5.2-48	HVAC BESTEST: CE300 June 28 Hourly COP2	Fig B16.5.2-48 HrCOP2
B16.5.2-49	HVAC BESTEST: CE300 June 28 Hourly Zone Humidity Ratio	Fig B16.5.2-49 HrHum
B16.5.2-50	HVAC BESTEST: CE300 June 28 Hourly EDB & EWB	Fig B16.5.2-50 HrEDB,EWB
B16.5.2-51	HVAC BESTEST: CE300 June 28 Hourly ODB	Fig B16.5.2-51 HrODB
B16.5.2-52	HVAC BESTEST: CE300 June 28 Hourly OHR	Fig B16.5.2-52 HrOHR

Table B16-5 B16.6 Tables

Table	Description	Sheet Tab	Cell Range
B16.6-1	Total Furnace Load, GJ	Tables	A7–L24
B16.6-2	Total Furnace Input, GJ		A26–L43
B16.6-3	Fuel Consumption, m^3/s		A45–L62
B16.6-4	Fan Energy, both fans, kWh		A64–K76
B16.6-5	Mean Zone Temperature, °C		A78–J85
B16.6-6	Maximum Zone Temperature, °C		A87–J94
B16.6-7	Minimum Zone Temperature, °C		A96–J103

Table B16-6 B16.6 Figures

Figure	Description	Sheet Tab
B16.6-1	Total Furnace Load, GJ	B16.1-1 LOAD
B16.6-2	Total Furnace Input, GJ	B16.1-2 INPUT
B16.6-3	Fuel Consumption, m^3/s	B16.1-3 FUEL
B16.6-4	Fan Energy, both fans, kWh	B16.1-4 FANS
B16.6-5	Mean Zone Temperature, °C	B16.1-5 MEAN T
B16.6-6	Maximum Zone Temperature, °C	B16.1-6 MAX T
B16.6-7	Minimum Zone Temperature, °C	B16.1-7 MIN T

Copyrighted material licensed to Sei Ito on 2020-06-26 for licensee's use only.
All rights reserved. No further reproduction or distribution is permitted. Distributed by Techstreet for ASHRAE, www.techstreet.com

Table B16-7 B16.7.1 Tables

Table	Description	Sheet Tab	Cell Range
B16.7.1-1	FC/SZ Heating Coil Load [QH] (kWh/h)	Tables 1	A5–K17
B16.7.1-2	FC/SZ Total Cooling Coil Load [QCtotal] (kWh)		A20–K32
B16.7.1-3	FC/SZ Sensible Cooling Coil Load [QCsensible] (kWh/h)		A35–K47
B16.7.1-4	FC/SZ Latent Cooling Coil Load [QClatent] (kWh/h)		A50–K62
B16.7.1-5	FC/SZ Outdoor Air Temp (°C)		A65–K77
B16.7.1-6	FC/SZ Outdoor Air Humidity Ratio (%)		A80–K82
B16.7.1-7	FC/SZ Outdoor Air Mass Flow Rate (kgda/s)		A95–K107
B16.7.1-8	FC/SZ Cooling Coil Outlet Air Temperature (°C)		A110–K122
B16.7.1-9	FC/SZ Relative Humidity at Cooling Coil Outlet [RHcco] (%)		A125–K137
B16.7.1-10	FC/SZ Supply Fan Air Temperature Rise (°C)		A140–K152
B16.7.1-11	FC/SZ Supply Air Temperature (°C)		A155–K167
B16.7.1-12	FC/SZ Supply Air Humidity Ratio (g/gda)		A170–K182
B16.7.1-13	FC/SZ Supply Air Specific Volume (L/kgda)		A185–K197
B16.7.1-14	FC/SZ Supply Air Enthalpy (J/gda)		A200–K212
B16.7.1-15	FC/SZ Supply Air Mass Flow Rate (kgda/s)		A215–K227
B16.7.1-16	FC/SZ Outdoor Air Mass Flow to Supply Air Mass Flow Ratio (fraction)		A230–K242
B16.7.1-17	FC/SZ Zone Air Temperature (°C)		A245–K257
B16.7.1-18	FC/SZ Zone Humidity Ratio (g/gda)		A260–K272
B16.7.1-19	FC/SZ Moisture Added to Zone by Latent Gains (g/s)		A275–K288
B16.7.1-20	FC/SZ Return Fan Air Temperature Rise (°C)		A290–K299
B16.7.1-21	FC/SZ Delta Coil Load: SZ - FC (kWh/h)	Delta Tables 1	A5–K12
B16.7.1-22	SZ Delta Coil Load: Economizer Operation (kWh/h)		A15–L23

Table B16-8 B16.7.1 Figures

Figure	Description	Sheet Tab
B16.7.1-1	FC/SZ Heating Coil Load [QH]	Fig B16.7.1-1 HeatCoil
B16.7.1-2	FC/SZ Cooling Coil Load, Total [QCtotal]	Fig B16.7.1-2 CoolCoilTot
B16.7.1-3	FC/SZ Cooling Coil Load, Sensible [QCsensible]	Fig B16.7.1-3 CoolCoilSens
B16.7.1-4	FC/SZ Cooling Coil Load, Latent [QClatent]	Fig B16.7.1-4 CoolCoilLat
B16.7.1-5	FC/SZ Outdoor Air Temperature	Fig B16.7.1-5 OAT
B16.7.1-6	FC/SZ Outdoor Air Humidity Ratio	Fig B16.7.1-6 OAW
B16.7.1-7	FC/SZ Outdoor Air Mass Flow Rate	Fig B16.7.1-7 OAmassflow
B16.7.1-8	FC/SZ Cooling Coil Outlet Air Temperature	Fig B16.7.1-8 CCOT
B16.7.1-9	FC/SZ Cooling Coil Outlet Relative Humidity [RHcco]	Fig B16.7.1-9 RHcco
B16.7.1-10	FC/SZ Supply Fan Air Temperature Rise	Fig B16.7.1-10 Supply Fan dT
B16.7.1-11	FC/SZ Supply Air Temperature	Fig B16.7.1-11 SAT
B16.7.1-12	FC/SZ Supply Air Humidity Ratio	Fig B16.7.1-12 SAW

Copyrighted material licensed to Sei Ito on 2020-06-26 for licensee's use only.
All rights reserved. No further reproduction or distribution is permitted. Distributed by Techstreet for ASHRAE, www.techstreet.com

Table B16-8 B16.7.1 Figures *(Continued)*

Figure	Description	Sheet Tab
B16.7.1-13	FC/SZ Supply Air Specific Volume	Fig B16.7.1-13 SAVs
B16.7.1-14	FC/SZ Supply Air Enthalpy	Fig B16.7.1-14 SAenth
B16.7.1-15	FC/SZ Supply Air Mass Flow Rate	Fig B16.7.1-15 SAmassflow
B16.7.1-16	FC/SZ Outdoor Air to Supply Air Mass Flow Ratio	Fig B16.7.1-16 OAFrac
B16.7.1-17	FC/SZ Zone Air Temperature	Fig B16.7.1-17 ZoneAirT
B16.7.1-18	FC/SZ Zone Humidity Ratio	Fig B16.7.1-18 ZoneAirW
B16.7.1-19	FC/SZ Moisture Added to Zone by Latent Gains	Fig B16.7.1-19 Zone Lat Gain
B16.7.1-20	FC/SZ Return Fan Air Temperature Rise	Fig B16.7.1-20 Return Fan dT
B16.7.1-21	FC/SZ Delta Coil Load, SZ - FC	Fig B16.7.1-21 Delta SZ-FC
B16.7.1-22	FC/SZ Delta Coil Load, Economizer Operation	Fig B16.7.1-22 Delta Econo

Table B16-9 B16.7.2 Tables

Table	Description	Sheet Tab	Cell Range
B16.7.2-1	CV/VAV Total Coil Load, Heating + Cooling, Sensible & Latent (kWh/h)	Tables 1	A5–J21
B16.7.2-2	CV/VAV Total Sensible Coil Load, Heating + Cooling (kWh/h)		A24–J40
B16.7.2-3	CV/VAV Pre-Heating Coil Load [QHpreheat] (kWh/h)		A43–J59
B16.7.2-4	CV/VAV Total Cooling Coil Load [QCtotal] (kWh/h)		A62–J78
B16.7.2-5	CV/VAV Sensible Cooling Coil Load [QCsensible] (kWh/h)		A81–J97
B16.7.2-6	CV/VAV Latent Cooling Coil Load [QClatent] (kWh/h)		A100–J116
B16.7.2-7	CV/VAV Zone 1 Reheat Coil Load [QH1reheat] (kWh/h)		A119–J135
B16.7.2-8	CV/VAV Zone 2 Reheat Coil Load [QH2reheat] (kWh/h)		A138–J154
B16.7.2-9	CV/VAV Outdoor Air Temperature (°F)		A157–J173
B16.7.2-10	CV/VAV Outdoor Air Humidity Ratio (g/gda)		A176–J192
B16.7.2-11	CV/VAV Outdoor Air Mass Flow Rate (kgda/s)		A195–J211
B16.7.2-12	CV/VAV Cooling Coil Outlet Air Temperature (°C)		A214–J230
B16.7.2-13	CV/VAV Cooling Coil Outlet Relative Humidity [RHcco] (%)		A233–J249
B16.7.2-14	CV/VAV Supply Fan Air Temperature Rise (°C)		A252–J268
B16.7.2-15	CV/VAV Supply Air Temperature (°C)		A271–J287
B16.7.2-16	CV/VAV Supply Air Humidity Ratio (g/gda)		A290–J306
B16.7.2-17	CV/VAV Supply Air Specific Volume (L/kgda)		A309–J325
B16.7.2-18	CV/VAV Supply Air Enthalpy (J/gda)		A328–J344
B16.7.2-19	CV/VAV Supply Air Mass Flow Rate (kgda/s)		A347–J363
B16.7.2-20	CV/VAV Ratio of Outdoor Air Mass Flow to Supply Air Mass Flow (fraction)		A366–J382
B16.7.2-21	CV/VAV Zone 1 Supply Air Temperature (°C)		A385–J401
B16.7.2-22	CV/VAV Zone 1 Air Temperature (°C)		A404–J420
B16.7.2-23	CV/VAV Zone 1 Humidity Ratio (g/gda)		A423–J439
B16.7.2-24	CV/VAV Zone 2 Supply Air Temperature (°C)		A442–J458

Copyrighted material licensed to Sei Ito on 2020-06-26 for licensee's use only. All rights reserved. No further reproduction or distribution is permitted. Distributed by Techstreet for ASHRAE, www.techstreet.com

Table B16-9 B16.7.2 Tables *(Continued)*

Table	Description	Sheet Tab	Cell Range
B16.7.2-25	CV/VAV Zone 2 Air Temperature (°C)	Tables 1	A461–J477
B16.7.2-26	CV/VAV Zone 2 Humidity Ratio (g/gda)		A480–J496
B16.7.2-27	CV/VAV Moisture Added to Zone 1 by Latent Gains (g/s)		A499–J516
B16.7.2-28	CV/VAV Moisture Added to Zone 2 by Latent Gains (g/s)		A518–J535
B16.7.2-29	CV/VAV Return Fan Air Temperature Rise (°C)		A537–J553
B16.7.2-30	CV/VAV Delta Preheat Coil Load, CV - VAV (kWh/h)	Delta Tables 1	A5–J14
B16.7.2-31	CV/VAV Delta Sensible Cooling Coil Load, CV - VAV (kWh/h)		A17–J26
B16.7.2-32	CV/VAV Delta Latent Cooling Coil Load, CV - VAV (kWh/h)		A29–J38
B16.7.2-33	CV/VAV Delta Total Cooling Coil Load, CV - VAV (kWh/h)		A41–J50
B16.7.2-34	CV Delta Cooling Coil Load, Economizer Operation (kWh/h)	Delta Tables 2	A5–K13
B16.7.2-35	VAV Delta Cooling Coil Load, Economizer Operation (kWh/h)		A16–K24

Table B16-10 B16.7.2 Figures

Figure	Description	Sheet Tab
B16.7.2-1	CV/VAV Total Coil Load, Heating + Cooling, Sensible & Latent	Fig B16.7.2-1 TotalCoil H+C
B16.7.2-2	CV/VAV Total Sensible Coil Load, Heating + Cooling	Fig B16.7.2-2 TotalSensCoil H+C
B16.7.2-3	CV/VAV Pre-Heating Coil Load [QHpreheat]	Fig B16.7.2-3 PreHeatCoil
B16.7.2-4	CV/VAV Cooling Coil Load, Total [QCtotal]	Fig B16.7.2-4 CoolCoilTot
B16.7.2-5	CV/VAV Cooling Coil Load, Sensible [QCsensible]	Fig B16.7.2-5 CoolCoilSens
B16.7.2-6	CV/VAV Cooling Coil Load, Latent [QClatent]	Fig B16.7.2-6 CoolCoilLat
B16.7.2-7	CV/VAV Zone 1 Reheat Load [QH1reheat]	Fig B16.7.2-7 Zone1 Reheat
B16.7.2-8	CV/VAV Zone 2 Reheat Load [QH2reheat]	Fig B16.7.2-8 Zone2 Reheat
B16.7.2-9	CV/VAV Outdoor Air Temperature	Fig B16.7.2-9 OAT
B16.7.2-10	CV/VAV Outdoor Air Humidity Ratio	Fig B16.7.2-10 OAW
B16.7.2-11	CV/VAV Outdoor Air Mass Flow Rate	Fig B16.7.2-11 OAmassflow
B16.7.2-12	CV/VAV Cooling Coil Outlet Air Temperature	Fig B16.7.2-12 CCOT
B16.7.2-13	CV/VAV Cooling Coil Outlet Relative Humidity [RHcco]	Fig B16.7.2-13 RHcco
B16.7.2-14	CV/VAV Supply Fan Air Temperature Rise	Fig B16.7.2-14 Supply Fan dT
B16.7.2-15	CV/VAV Supply Air Temperature	Fig B16.7.2-15 SAT
B16.7.2-16	CV/VAV Supply Air Humidity Ratio	Fig B16.7.2-16 SAW
B16.7.2-17	CV/VAV Supply Air Specific Volume	Fig B16.7.2-17 SAVs
B16.7.2-18	CV/VAV Supply Air Enthalpy	Fig B16.7.2-18 SAenth
B16.7.2-19	CV/VAV Supply Air Mass Flow Rate	Fig B16.7.2-19 SAmassflow
B16.7.2-20	CV/VAV Outdoor Air to Supply Air Mass Flow Ratio	Fig B16.7.2-20 OAfrac
B16.7.2-21	CV/VAV Zone 1 Supply Air Temperature	Fig B16.7.2-21 Zone1 SAT
B16.7.2-22	CV/VAV Zone 1 Air Temperature	Fig B16.7.2-22 Zone1 AirT
B16.7.2-23	CV/VAV Zone 1 Humidity Ratio	Fig B16.7.2-23 Zone1 AirW

Copyrighted material licensed to Sei Ito on 2020-06-26 for licensee's use only.
All rights reserved. No further reproduction or distribution is permitted. Distributed by Techstreet for ASHRAE, www.techstreet.com

Table B16-10 B16.7.2 Figures *(Continued)*

Figure	Description	Sheet Tab
B16.7.2-24	CV/VAV Zone 2 Supply Air Temperature	Fig B16.7.2-24 Zone2 SAT
B16.7.2-25	CV/VAV Zone 2 Air Temperature	Fig B16.7.2-25 Zone2 AirT
B16.7.2-26	CV/VAV Zone 2 Humidity Ratio	Fig B16.7.2-26 Zone2 AirW
B16.7.2-27	CV/VAV Moisture Added to Zone 1 by Latent Gains	Fig B16.7.2-27 Zone1 Lat Gain
B16.7.2-28	CV/VAV Moisture Added to Zone 2 by Latent Gains	Fig B16.7.2-28 Zone2 Lat Gain
B16.7.2-29	CV/VAV Return Fan Air Temperature Rise	Fig B16.7.2-29 Return Fan dT
B16.7.2-30	CV/VAV Delta Pre-Heating Coil Load, CV-VAV	Fig B16.7.2-30 CV-VV dPreheat
B16.7.2-31	CV/VAV Delta Total Cooling Coil Load, CV-VAV	Fig B16.7.2-31 CV-VV dTot Cool
B16.7.2-32	CV/VAV Delta Sensible Cooling Coil Load, CV-VAV	Fig B16.7.2-32 CV-VV dSens Cool
B16.7.2-33	CV/VAV Delta Latent Cooling Coil Load, CV-VAV	Fig B16.7.2-33 CV-VV dLat Cool
B16.7.2-34	CV Delta Cooling Coil Load, Economizer Operation	Fig B16.7.2-34 CV dEcono
B16.7.2-35	VAV Delta Cooling Coil Load, Economizer Operation	Fig B16.7.2-35 VAV dEcono

Copyrighted material licensed to Sei Ito on 2020-06-26 for licensee's use only.
All rights reserved. No further reproduction or distribution is permitted. Distributed by Techstreet for ASHRAE, www.techstreet.com

(This annex is not part of this standard. It is merely informative and does not contain requirements necessary for conformance to the standard. It has not been processed according to the ANSI requirements for a standard and may contain material that has not been subject to public review or a consensus process. Unresolved objectors on informative material are not offered the right to appeal at ASHRAE or ANSI.)

INFORMATIVE ANNEX B17 PRODUCTION OF ANALYTICAL AND QUASI-ANALYTICAL SOLUTION RESULTS AND EXAMPLE SIMULATION RESULTS FOR HVAC EQUIPMENT PERFORMANCE TESTS OF SECTIONS 5.3, 5.4, AND 5.5

B17.1 For Space-Cooling Equipment Cases

B17.1.1 Analytical Verification Tests, Cases CE100 through CE200

B17.1.1.1 Introduction

B17.1.1.1.1 The full discussion regarding production of quasi-analytical solution results and example simulation results is included in *HVAC BESTEST* [B-16]. Portions of that discussion have been included here. The quasi-analytical solutions and programs used to generate the example simulation results are described in Table B17-1.

B17.1.1.1.2 The first column of Table B17-1 ("Model") indicates the proper program name and version number or indicates a quasi-analytical solution. The second column ("Authoring Organization") indicates the national research facility or university with expertise in building science that wrote the simulation software or did the quasi-analytical solutions. The third column ("Implemented By") indicates the national research facility or university with expertise in building science that performed the simulations or did the quasi-analytical solutions. The entries in the fourth column are the abbreviations for the simulations and quasi-analytical solutions generally used in Informative Annex B16 and elsewhere in the informative annexes. The majority of participating organizations that performed simulations ran software that their organization either authored or coauthored.

B17.1.1.1.3 The availability of quasi-analytical solutions (see Section B17.1.1.2) greatly helped to identify and correct errors in the simulations such that errors are minimized in the final simulation results. Also, to minimize the potential for user error in the simulations, when feasible more than one modeler developed input files for each program. This was done for DOE-2.1E, and, where disagreement in the inputs or results was found, the modelers worked to resolve the differences. Additionally, one of the participants (TUD) developed quasi-analytical solutions and ran separate controller models within TRNSYS; this allowed for greater understanding of the test specification and of their simulation model.

Where only a single modeler was involved, we strongly recommended that another modeler familiar with the program check the inputs carefully.

B17.1.1.1.4 Where improvements to simulation programs or simulation inputs were made as a result of running the tests, such improvements must have mathematical and physical bases and must be applied consistently across tests. Also, all improvements were required to be documented in modeler reports. Arbitrary modification of a simulation program's input or internal code for the sole purpose of more closely matching a given set of results was not allowed.

B17.1.1.1.5 Input files used to generate the simulation results are provided in the files accompanying this standard (see the README*.DOCX file). International Energy Agency participants that ran simulations for CA-SIS and CLIM2000 did not supply input files with their results.

B17.1.1.2 Quasi-Analytical Solution Results. The quasi-analytical solution results given in Informative Annex B16, Section B16.5.1, were developed as part of International Energy Agency (IEA) Solar Heating and Cooling Programme Task 22. The importance of having analytical or quasi-analytical solution results is discussed in Informative Annex B16, Section B16.2. Two of the IEA participating organizations independently developed quasi-analytical solutions that were submitted to a third party for review [B-59,B-60,B-61]. Comparing the results indicated some disagreements, which were then resolved by allowing the solvers to review the third-party reviewers' comments and to review and critique each others' solution techniques. This process resulted in both solvers making logical and nonarbitrary changes to their solutions such that their final results are mostly well within a <1% range of disagreement. Remaining differences in the quasi-analytical solutions are due in part to the difficulty of completely describing boundary conditions. In this case, the boundary conditions are a compromise between full reality and some simplification of the real physical system that is mathematically solvable. Therefore, the quasi-analytical solutions have some element of interpretation of the exact nature of the boundary conditions that causes minor differences in the results. For example, in the modeling of the controller, one group derived a quasi-analytical solution for an "ideal" controller (that maintains zone temperature exactly at the thermostat set point), while another group developed a numerical solution for a "realistic" controller (that allows a small degree of zone temperature variation over very short simulation time steps). As another example, for the purpose of determining the "maximum EWB" dry-coil condition, one group used linear interpolation or extrapolation in conjunction with local intervals of given performance data, while another group used a similar but more generalized solution technique and incorporated the extremes of performance data. Each quasi-analytical solution yields slightly different results, but all are correct in the context of this exercise. This may be less than perfect from a mathematician's viewpoint but quite acceptable from an engineering perspective. A fully detailed presentation of the quasi-analytical solutions, including specific examples of remaining minor differences in the solutions, is discussed in Part II of *HVAC BESTEST* [B-16].

B17.1.2 Comparative Tests, Cases CE300 through CE545

B17.1.2.1 Introduction. Programs used to generate the example simulation results are described in Table B17-2, which is organized similarly to Table B17-1. See Section B17.1.1.1.2 for description of information included in the

Copyrighted material licensed to Sei Ito on 2020-06-26 for licensee's use only. All rights reserved. No further reproduction or distribution is permitted. Distributed by Techstreet for ASHRAE, www.techstreet.com

Copyrighted material licensed to Sei Ito on 2020-06-26 for licensee's use only.
All rights reserved. No further reproduction or distribution is permitted. Distributed by Techstreet for ASHRAE, www.techstreet.com

Table B17-1 Participating Organizations and Computer Programs—Analytical Verification Test Cases CE100 through CE200

Model	Authoring Organization	Implemented By	Abbreviation
Quasi-analytical solution with ideal controller model	Hochschule Technik & Architektur Luzern, Switzerland (HTAL)	Hochschule Technik & Architektur Luzern, Switzerland	HTAL1
Quasi-analytical solution with realistic controller model	Hochschule Technik & Architektur Luzern, Switzerland	Hochschule Technik & Architektur Luzern, Switzerland	HTAL2
Quasi-analytical solution with ideal controller model	Technische Universität Dresden, Germany (TUD)	Technische Universität Dresden, Germany	TUD
CA-SIS V1	Electricité de France, France (EDF)	Electricité de France, France	CA-SIS
CLIM2000 2.1.6	Electricité de France, France	Electricité de France, France	CLM2000
DOE-2.1E-088	LANL/LBNL/ESTSC [a,b,c], USA	CIEMAT [d], Spain	DOE21E/CIEMAT DOE2.1-E/CIEMAT
DOE-2.1E-133	LANL/LBNL/JJH [a,b,e], USA	NREL/JNA [f], USA	DOE21E/NREL DOE2.1-E/NREL
ENERGYPLUS 1.0.0.023	LBNL/UIUC/CERL/OSU/GARD Analytics/ FSEC/DOE-OBT [b,g,h,i,j,k], USA	GARD Analytics, USA	E+ EnergyPlus
TRNSYS 14.2-TUD with ideal controller model	University of Wisconsin, USA; Technische Universität Dresden, Ger.	Technische Universität Dresden, Germany	TRN-id TRNSYS-ideal
TRNSYS 14.2-TUD with real controller model	University of Wisconsin, USA; Technische Universität Dresden, Ger.	Technische Universität Dresden, Germany	TRN-re TRNSYS-real

a. Los Alamos National Laboratory (LANL), United States
b. Lawrence Berkeley National Laboratory (LBNL), United States
c. Energy Science and Technology Software Center (ESTSC) (at Oak Ridge National Laboratory), United States
d. Centro de Investigaciones Energeticas, Medioambientales y Tecnologicas (CIEMAT), Spain
e. James J. Hirsch & Associates (JJH), United States
f. National Renewable Energy Laboratory/J. Neymark & Associates (NREL/JNA), United States
g. University of Illinois Urbana/Champaign (UIUC), United States
h. U.S. Army Corps of Engineers, Construction Engineering Research Laboratories (CERL), United States
i. Oklahoma State University (OSU), United States
j. University of Central Florida, Florida Solar Energy Center (FSEC), United States
k. Office of Building Technologies, Energy Efficiency and Renewable Energy, U.S. Department of Energy (DOE-OBT), United States

Table B17-2 Participating Organizations and Computer Programs, Comparative Test Cases CE300 through CE545

Model	Authoring Organization	Implemented by	Abbreviation
CODYRUN/LGIMAT	Université de la Reunion Island, France	Université de la Reunion Island, France	CODYRUN/UR
DOE-2.1E version 120 (ESTSC release)	LANL/LBNL/ESTSC/JJH [a,b,c,d], United States	NREL/JNA [e], United States	DOE-2.1E-E/NREL DOE21E-E
DOE-2.2 NT42j	LBNL/JJH [b,d], United States	NREL/JNA [e], United States	DOE-2.2/NREL
EnergyPlus 1.1.0.020	LBNL/UIUC/CERL/OSU/GARD Analytics/ FSEC/DOE-BT [b,f,g,h,i,j], United States	GARD Analytics, United States	EnergyPlus/GARD
HOT3000/ESP-r	CETC/ESRU [k,l], Canada/United Kingdom	CETC [k], Canada	HOT3000/NRCan
TRNSYS 14.2-TUD with real controller model	University of Wisconsin, United States; Technische Universität Dresden, Germany	Technische Universität Dresden, Germany	TRNSYS/TUD

a. Los Alamos National Laboratory (LANL), United States
b. Lawrence Berkeley National Laboratory (LBNL), United States
c. Energy Science and Technology Software Center (ESTSC) (at Oak Ridge National Laboratory), United States
d. James J. Hirsch & Associates (JJH), United States
e. National Renewable Energy Laboratory/J. Neymark & Associates (NREL/JNA), United Sates
f. University of Illinois Urbana/Champaign (UIUC), United States
g. U.S. Army Corps of Engineers, Construction Engineering Research Laboratories (CERL), United States
h. Oklahoma State University (OSU), United States
i. University of Central Florida, Florida Solar Energy Center (FSEC), United States
j. U.S. Department of Energy, Office of Building Technologies (DOE-BT), Energy Efficiency and Renewable Energy, United States
k. CANMET Energy Technology Centre (CETC), Natural Resources Canada, Canada
l. Energy Systems Research Unit (ESRU), University of Strathclyde, Scotland, United Kingdom

Table B17-3 Participating Organizations and Computer Programs, Analytical Verification and Comparative Test Cases HE100 through HE230

Model	Authoring Organization	Implemented By	Abbreviation
ESP-r/HOT3000 Tier 1 tests - version 1.1 Tier 2 tests - version 1.7	CETC/ESRU [a,b], Canada/United Kingdom	CETC [a], Canada	ESP-r/HOT3000/CETC
EnergyPlus 1.0.2.008	LBNL/UIUC/CERL/OSU/GARD Analytics/FSEC/DOE-OBT [c,d,e,f,g,h], USA	GARD Analytics, USA	EnergyPlus/GARD
DOE-2.1E version c133	LANL/LBNL/JJH [i,c,j], USA	CETC [a], Canada	DOE-2.1E/CETC
Analytical/ Quasi-Analytical Solutions	CETC [a]	CETC [a]	Analytical/Quasi-Analytical

a. CANMET Energy Technology Centre (CETC), Natural Resources Canada, Canada
b. Energy Systems Research Unit (ESRU), University of Strathclyde, Scotland, United Kingdom
c. Lawrence Berkeley National Laboratory (LBNL), United States
d. University of Illinois Urbana/Champaign (UIUC), United States
e. U.S. Army Corps of Engineers, Construction Engineering Research Laboratories (CERL), United States
f. Oklahoma State University (OSU), United States
g. University of Central Florida, Florida Solar Energy Center (FSEC), United States
h. U.S. Department of Energy, Office of Building Technology (DOE-OBT), Energy Efficiency and Renewable Energy, United States
i. Los Alamos National Laboratory (LANL), United States
j. James J. Hirsch & Associates (JJH), United States

table. Rules for improvements to simulations were in accord with Section B17.1.1.1.4. Input files used to generate the simulation results are provided with the accompanying electronic media; see the README*.DOCX file.

B17.1.2.2 Disagreements Related to TMY2 Data Time Convention. According to the TMY2 weather data documentation included in Normative Annex A1, Section A1.6, solar radiation data represent energy received during the 60 minutes preceding the hour indicated. For meteorological elements, such as dry-bulb temperature, dew-point temperature, relative humidity, and atmospheric pressure, data are spot measurements made at the hour indicated [B-37]. During the field trials of Cases CE300 through CE545, it was observed that some simulation tools have adapted the meteorological element data to a preceding hour convention by averaging the listed point measurements for each hour. Other simulation tools have applied the meteorological element data as listed directly to their preceding hour time convention. These different applications give similar annual energy use results but can cause variations among hourly and peak-hour load and consumption results. Either of these applications is a reasonable interpretation for the tests in this standard for simulations that use preceding hour time conventions; such different adaptations of the mixed conventions of TMY2 data cause legitimate disagreement among simulation results.

B17.1.3 Selection of Programs for Producing Example Simulation Results. The criteria for selection of programs used for producing example results required that

a. the program be a true simulation based on hourly weather data and calculational time increments of one hour or less and
b. the program be representative of the state of the art in whole-building energy simulation as defined by the IEA country making the selection.

The programs used to generate example results have been subjected to extensive prior validation testing. Such testing includes the preliminary trials of *HVAC BESTEST*, Volume 1 [B-16] that ran from 1997 through 2001 and *HVAC BESTEST*, Volume 2 [B-17] and *Furnace BESTEST* [B-58] that ran from 2001 through 2004. The programs (to various extents) were also subjected to other comparative, empirical validation and/or analytical verification tests, such as those referenced in *HVAC BESTEST*, *IEA BESTEST*, and in International Building Performance Simulation Association (IBPSA) proceedings [B-16,B-29,B-47,B-48].

B17.2 For Space-Heating Equipment Cases (HE100 through HE170). The analytical and quasi-analytical solutions and programs used to generate the example simulation results are described in Table B17-3. Table B17-3 is organized similarly to Table B17-1; see Section B17.1.1.1.2 for a description of the information included in the table. Input files used to generate the simulation results are provided with the accompanying electronic media (see the README*.DOCX file).

B17.2.1 Analytical Solutions. The configuration used for tests HE100 through HE130 is well posed for analytical solutions. The results can be used for comparison with the software being tested.

B17.2.1.1 Case HE100: Base Case. A simple schematic of the heat transfer through the roof heat transfer surface is shown in Figure B17-1. The following section describes the simple heat transfer calculation for the analytic solution of the base case. Based on the building description given above, convective and conductive heat transfer will be considered, but radiation will be neglected because the radiative coefficients were defined as zero.

The convective flux from the interior of the zone to the interior surface can be defined as follows:

Copyrighted material licensed to Sei Ito on 2020-06-26 for licensee's use only. All rights reserved. No further reproduction or distribution is permitted. Distributed by Techstreet for ASHRAE, www.techstreet.com

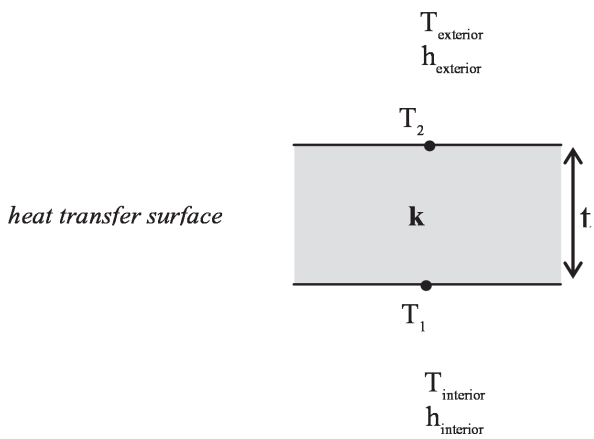

Figure B17-1 Heat flows through heat transfer surface.

$$q_{interior} = h_{interior}(T_{interior} - T_1) \qquad \text{(B17-1)}$$

The conductive flux through the heat transfer surface can be defined as follows:

$$q_{conduction} = \frac{k}{t}(T_1 - T_2) \qquad \text{(B17-2)}$$

The convective flux from the exterior surface to the exterior ambient can be defined as follows:

$$q_{exterior} = h_{exterior}(T_2 - T_{exterior}) \qquad \text{(B17-3)}$$

Combining Equations B17-1 through B17-3 gives the total heat flux through the surface:

$$q_{total} = [(T_{interior} - T_1) + (T_1 - T_2) + (T_2 - T_{exterior})] \times \left(\frac{1}{h_{interior}} + \frac{t}{k} + \frac{1}{h_{exterior}}\right)^{-1} \qquad \text{(B17-4)}$$

which can be reduced to the following:

$$q_{total} = (T_{interior} - T_{exterior}) \times \left(\frac{1}{h_{interior}} + \frac{t}{k} + \frac{1}{h_{exterior}}\right)^{-1} \qquad \text{(B17-5)}$$

Using the values defined in the previous sections and Equation B17-5, the heat flux becomes q_{total} = 208.28 W/m^2. The heat transfer surface is 48 m^2; therefore, the heat transfer through this surface is $\boldsymbol{Q_{total}}$ **= 9998 W**. The rate of energy transfer from the furnace to the zone air required to meet this load is $\boldsymbol{Q_{delivered}}$ **= 9998 W**.

The rate of fuel consumption of the furnace can be calculated as follows:

$$C = \frac{Q_{fuel}}{\text{HHV}} \qquad \text{(B17-6)}$$

where C is the rate of fuel consumption of the furnace in m^3/s, Q_{fuel} is the rate at which the fuel's chemical energy is converted to thermal energy (MW), and HHV is the higher heating value of natural gas, defined as 38 MJ/m^3 in Section 5.4.1.10.5.

Q_{fuel} can be calculated using the definition of the furnace steady-state efficiency, η:

$$\eta = \frac{Q_{delivered}}{Q_{fuel}} \qquad \text{(B17-7)}$$

As the furnace is 100% efficient, the heat delivered by the furnace is equal to the rate at which the furnace consumed fuel, as calculated with Equation B17-7; i.e., $\boldsymbol{Q_{delivered} = Q_{fuel}}$ **= 9998 W**. Using Equation B17-6, the rate of fuel consumption is **0.000263 m^3/s**.

B17.2.1.2 Case HE110. As with the base case, the energy delivered to the zone by the furnace is $\boldsymbol{Q_{delivered}}$ **= 9998 W**. In this case, the furnace is 80% efficient; therefore, the furnace will have to consume more fuel than the base case.

Equation B17-7 gives $\boldsymbol{Q_{fuel}}$ **= 12497.5 W**; therefore, the rate of fuel consumption can be calculated with Equation B17-6 as **0.000329 m^3/s**.

B17.2.1.3 Case HE120. Given that the outdoor temperature is now 0°C, and using the equations defined in Section B.17.2.1.1, the heat load on the furnace can be calculated as $\boldsymbol{Q_{delivered}}$ **= 3999 W**, 40% of the design capacity.

Residential furnaces cycle ON and OFF to meet their load at off-design conditions. The furnace part-load ratio PLR_f is used to predict the energy use of a furnace under part-load conditions and is defined as follows:

$$\text{PLR}_f = \frac{\text{Load placed on furnace}}{\text{Furnace capacity}} \qquad \text{(B17-8)}$$

where "Load placed on furnace" is integrated over the hour and "Furnace capacity" is the capacity of the furnace to supply heat for that hour.

The part-load factor (PLF) represents the degradation in furnace efficiency due to part-load operation:

$$\text{PLF} = \frac{\text{Part-load efficiency}}{\text{Steady-state efficiency}} = \frac{\eta_{part\ load}}{\eta} \qquad \text{(B17-9)}$$

Using Equations B17-8, B17-9, and B17-6, the part-load efficiency can be calculated as $\boldsymbol{\eta_{part\ load}}$ **= 0.8125**. Therefore, the rate of fuel consumption is **0.0001295 m^3/s**.

B17.2.1.4 Case HE130. The zone temperatures should remain at a constant value of 20°C, the same value as the outdoor temperature (ΔT = 0°C), and there should be no sensible heat load, energy, or fuel consumption by the furnace.

B17.2.2 Quasi-Analytical Solutions. For Cases HE140 through HE170, analytic solutions are not possible; as such, the reference results are calculated using a discrete time-step calculation similar to the approach applied by most building simulation programs. As the thermal mass of the building is effectively zero, a solution can be found on a time-step basis. The following details this one-hour time-step approach.

A spreadsheet [B-58] was created with each row representing one hour of the three-month simulation period. The "hours" column was filled sequentially with 1 to 24 for each day, beginning again with 1 for the next day. In this way, the exterior dry-bulb temperature can be calculated for each hour using the following equation:

Copyrighted material licensed to Sei Ito on 2020-06-26 for licensee's use only. All rights reserved. No further reproduction or distribution is permitted. Distributed by Techstreet for ASHRAE, www.techstreet.com

$$T = 20 \times \left[\sin\left(\frac{\pi}{12} \times t \right) \right] \quad \text{(B17-10)}$$

where t is the hour of the day.

The load placed on the furnace Q_{Total} is then calculated using the following equation:

$$Q_{Total} = q_{Total} \times \text{Area}$$

where q_{Total} is calculated using

$$q_{total} = (T_{interior} - T_{exterior}) \times \left(\frac{1}{h_{interior}} + \frac{t}{k} + \frac{1}{h_{exterior}} \right)^{-1} \quad \text{(B17-11)}$$

The part-load ratio PLR_f is then calculated using Equation B17-8:

$$\text{PLR}_f = \frac{\text{Load placed on furnace}}{\text{Furnace capacity}}$$

where furnace capacity has been previously defined as 10 kW, and the PLF can then be calculated using the following:

$$\text{PLF} = \frac{\text{PLR}_f}{\text{HIR}(\text{PLR}_f)} \quad \text{(B17-12)}$$

$$\text{HIR}(\text{PLR}_f) = a + b \times \text{PLR}_f + c \times \text{PLR}_f^2 + d \times \text{PLR}_f^3 \quad \text{(B17-13)}$$

where the coefficients have been previously defined as follows:

a = 0.0080472574
b = 0.87564457
c = 0.29249943
d = –0.17624156

The part-load efficiency is a function of the steady-state efficiency and the PLF, as defined in Equation B17-9:

$$\text{PLF} = \frac{\text{Part-load efficiency}}{\text{Steady-state efficiency}} = \frac{\eta_{part\ load}}{\eta}$$

which can be rearranged to give the following:

$$\eta_{part\ load} = \eta \times \text{PLF}$$

$Q_{furnace}$, the rate at which the fuel's chemical energy is converted to thermal mass in the furnace, can be calculated using the definition of the furnace steady-state efficiency:

$$\eta = \frac{Q_{Total}}{Q_{furnace}} \quad \text{(B17-14)}$$

which can be rearranged to give the following:

$$Q_{furnace} = Q_{delivered} \times \eta$$

The rate of fuel consumption of the furnace is then calculated using Equation B17-6:

$$C = \frac{Q_{fuel}}{\text{HHV}}$$

where C is the rate of fuel consumption of the furnace in cubic metres per second and HHV is the higher heating value of natural gas, defined as 38 MJ/m^3 in Section 5.4.1.10.5.

The electrical consumption of the fans that run continuously is simply calculated as a constant consumption. If, for example, a 200 W fan runs continuously, then 200 W is applied for that time step. If, on the other hand, the fan cycles with the furnace burner operation, then the fan power is multiplied by the PLR for that time step.

B17.2.2.1 Case HE140. The calculation of the heating load on the furnace and the fuel consumption over a 24-hour period is required to examine the impact of the varying outdoor dry-bulb temperature. Table B17-4 shows the calculated sensible heat load to be delivered by the furnace $Q_{delivered}$, the part-load efficiency $\eta_{part\ load}$, the rate of fuel consumption of the furnace Q_{fuel}, and the resulting fuel consumption over a 24-hour period. A description of the semi-analytical calculation method is presented in Section B17.2.2.

The average hourly calculated heat delivered by the furnace is **3999.07 W**, and the rate of fuel consumption is **0.000132 m^3/s**.

B17.2.2.2 Case HE150. As the circulation fan runs constantly, 200 W of fan heat is continuously added to the heated airstream. This reduces the energy required from fuel combustion while maintaining the constant zone temperature. This has the impact of affecting the part-load factor and fuel consumption.

The average hourly value calculated for the heat to be delivered by the furnace is **3999.07 W**, and the rate of fuel consumption is **0.0001253 m^3/s**. The total electricity consumption is calculated to be 432 kWh, or **1.56 GJ** for the three-month period. Table B17-5 gives the results for a 24-hour period.

B17.2.2.3 Case HE160. This calculated solution assumes that the PLR_f is equal to the fraction of time during which the fan operates for a given time step. In addition, it assumes that there are no effects from fan start-up or shutdown; i.e., when the fan is on, it draws 200 W. It is recognized that some building simulation programs may apply different assumptions in the modeling of circulation fans. In this case, results would be expected to disagree with these calculated results by a small amount.

As the circulating fan cycles with the burner operation, its hourly energy varies based on the load on the furnace. It can be calculated as follows:

$$\text{Energy}_{circ,fan} = \Delta t \times \text{Power}_{circ,fan} \times \text{PLF}_f \quad \text{(B17-15)}$$

where Δt is the time step, $\text{Power}_{circ,fan}$ is the rated circulation fan power (200 W in this case), and PLR_f is as follows:

$$\text{PLR}_f = \frac{\text{Load placed on furnace}}{\text{Furnace capacity}}$$

where the available furnace capacity includes the fan power.

The average hourly value calculated for the heat to be delivered by the furnace is **3999.07 W**, and the rate of fuel consumption is **0.0001289 m^3/s**. These values are higher than the previous case where the circulating fan ran constantly.

Copyrighted material licensed to Sei Ito on 2020-06-26 for licensee's use only. All rights reserved. No further reproduction or distribution is permitted. Distributed by Techstreet for ASHRAE, www.techstreet.com

Table B17-4 Heat Load, Efficiency, and Fuel Consumption for the Complex Part-Load Test

Hour of Day	Temperature, °C	$Q_{delivered}$, W	$\eta_{part\ load}$	Q_{fuel}, W	Rate of Fuel Consumption, m^3/s
1	5.18	2964.03	0.821	3608.74	0.000095
2	10.00	1999.53	0.827	2417.76	0.000064
3	14.14	1171.30	0.820	1429.26	0.000038
4	17.32	535.77	0.768	697.18	0.000018
5	19.32	136.26	0.544	250.41	0.000007
6	20.00	0.0	0.0	0.0	0.0
7	19.32	136.26	0.544	250.41	0.000007
8	17.32	535.77	0.768	697.18	0.000018
9	14.14	1171.30	0.820	1429.26	0.000038
10	10.00	1999.53	0.827	2417.76	0.000064
11	5.18	2964.03	0.821	3608.74	0.000095
12	0.00	3999.07	0.813	4921.62	0.000130
13	–5.18	5034.10	0.805	6256.22	0.000165
14	–10.00	5998.60	0.799	7506.51	0.000198
15	–14.14	6826.83	0.796	8576.02	0.000226
16	–17.32	7462.36	0.795	9389.13	0.000247
17	–19.32	7861.87	0.795	9895.21	0.000260
18	–20.00	7998.13	0.795	10066.74	0.000265
19	–19.32	7861.87	0.795	9895.21	0.000260
20	–17.32	7462.36	0.795	9389.13	0.000247
21	–14.14	6826.83	0.796	8576.02	0.000226
22	–10.00	5998.60	0.799	7506.51	0.000198
23	–5.18	5034.10	0.805	6256.22	0.000165
24	0.00	3999.07	0.813	4921.62	0.000130

The total electricity consumption is 172.76 kWh, or **0.62 GJ** for the three-month period, which is lower than in the previous case. Table B17-6 gives the results for a 24-hour period.

B17.2.2.4 Case HE170. The circulating fan operates continuously at 200 W, whereas the draft fan cycles with the burner operation. Implicit in this calculation is that the PLR_f is equal to the fraction of time during which the draft fan operates for a given time step. In addition, it is assumed that there are no effects from fan start-up or shut-down; i.e., when the draft fan is ON, it draws 50 W. The draft fan's hourly energy varies based on the load on the furnace and can be calculated as follows:

$$\text{Energy}_{draft,fan} = \Delta t \times \text{Power}_{draft,fan} \times \text{PLF}_f \qquad \text{(B17-16)}$$

where Δt is the time step, $\text{Power}_{draft,fan}$ is the rated draft fan power (50 W in this case), and PLR_f is as follows:

$$\text{PLR}_f = \frac{\text{Load placed on furnace}}{\text{Furnace capacity}}$$

The heat output of the draft fan should not be added to the zone energy balance; therefore, there should be no impact on the energy balance of the zone. The average hourly value calculated for the heat to be delivered by the furnace is **3999.07 W**, and the rate of fuel consumption is **0.0001253 m^3/s**.

The electrical consumption of the furnace system should increase with an additional load of the draft fan. The total electricity consumption is calculated as 473.18 kWh, or **1.70 GJ** for the three-month period of this test. Table B17-7 gives the results for a 24-hour period.

B17.2.3 Analytical Solution for Alternate Method of Generating Heating Load with Infiltration. These alternate test cases, described in Section 5.4.1.9, are designed for those simulation programs that do not allow the user to specify constant convective surface heat transfer coefficients. In this

Copyrighted material licensed to Sei Ito on 2020-06-26 for licensee's use only. All rights reserved. No further reproduction or distribution is permitted. Distributed by Techstreet for ASHRAE, www.techstreet.com

Table B17-5 Heat Load, Efficiency, Fuel and Electricity Consumption for the Circulating Fan Test

Hour of Day	Temperature, °C	$Q_{delivered}$, W	$\eta_{part\ load}$	Q_{fuel}, W	Rate of Fuel Consumption, m^3/s	Electricity, kWh
1	5.18	2764.03	0.82	3358.79	0.0000884	0.2
2	10	1799.53	0.83	2175.84	0.0000573	0.2
3	14.14	971.30	0.81	1196.21	0.0000315	0.2
4	17.32	335.77	0.71	472.15	0.0000124	0.2
5	19.32	0	0	0	0	0.2
6	20	0	0	0	0	0.2
7	19.32	0	0	0	0	0.2
8	17.32	335.77	0.71	472.15	0.0000124	0.2
9	14.14	971.30	0.81	1196.21	0.0000315	0.2
10	10.00	1799.53	0.83	2175.84	0.0000573	0.2
11	5.18	2764.03	0.82	3358.79	0.0000884	0.2
12	0	3799.07	0.81	4665.79	0.0001228	0.2
13	–5.18	4834.10	0.81	5997.33	0.0001578	0.2
14	–10	5798.60	0.80	7247.32	0.0001907	0.2
15	–14.14	6626.83	0.80	8318.55	0.0002189	0.2
16	–17.32	7262.36	0.80	9134.20	0.0002404	0.2
17	–19.32	7661.87	0.79	9642.42	0.0002537	0.2
18	–20	7798.13	0.79	9814.78	0.0002583	0.2
19	–19.32	7661.87	0.79	9642.42	0.0002537	0.2
20	–17.32	7262.36	0.80	9134.20	0.0002404	0.2
21	–14.14	6626.83	0.80	8318.55	0.0002189	0.2
22	–10	5798.60	0.80	7247.32	0.0001907	0.2
23	–5.18	4834.10	0.81	5997.33	0.0001578	0.2
24	0	3799.07	0.81	4665.79	0.0001228	0.2

approach, the heating loads are primarily driven by infiltration of outdoor air into the zone. Envelope conductance heat flow is minimized through the specification of a very low thermal conductance for all envelope elements (as shown in Table 5-58). The infiltration airflow rate is specified as that required to achieve the same overall zone heat loss rate as a UA value as when heating load is driven by roof conduction (as specified in Sections 5.4.1.4 through 5.4.1.8).

The analytical solution results for when heating load is driven by infiltration are the same as for when heating load is driven by roof conduction and are not repeated here (see Sections B17.2.1 and B17.2.2). However, further details are provided on the development of the target heat loss rate and its application.

The overall target zone heat loss rate (UA value) is determined exactly by Equation B17-17. For the main load specification (i.e., heat load generated by heat conduction through the roof as described in Sections 5.4.1.3 through 5.4.1.8), infiltration is specified as zero in Section 5.4.1.5, element areas are specified in Table 5-57, and R-values are determined by combining materials from Table 5-57 with surface coefficients specified in Section 5.4.1.7. The wall and floor surface coefficient specified in Section 5.4.1.7 is indicated as approaching zero. The analytic solution in Section B17.2.1 and quasi-analytic solution in Section B17.2.2 assume the surface coefficient for these surfaces is zero. With a surface coefficient of zero, the roof and wall conduction terms become zero and drop from the calculation. The infiltration also is zero and drops from the calculation, leaving only the roof conduction term. The resulting target UA value is as shown.

$$\left(m_{inf} \times c_p + \frac{A_{wall}}{R_{tot,\,wall}} + \frac{A_{roof}}{R_{tot,\,roof}} + \frac{A_{floor}}{R_{tot,\,floor}}\right) = \left(\frac{48}{0.240056}\right) = 199.953 \text{ W/K} \tag{B17-17}$$

where

m_{inf} = infiltration mass flow rate, kg/s

c_p = specific heat of outdoor air, J/(kg·K)

Copyrighted material licensed to Sei Ito on 2020-06-26 for licensee's use only. All rights reserved. No further reproduction or distribution is permitted. Distributed by Techstreet for ASHRAE, www.techstreet.com

Table B17-6 Heat Load, Efficiency, Fan Power, Fuel and Electricity Consumption for Cycling Fan Case

Hour of Day	Temperature, °C	Q_{Total}, W	$\eta_{part\ load}$	$Q_{Furnace}$, W	Fuel Consumption, m^3/h	Electricity, kWh
1	5.18	2964.03	0.82	3536.57	0.0000931	0.059
2	10.00	1999.53	0.83	2369.41	0.0000624	0.040
3	14.14	1171.30	0.82	1400.68	0.0000369	0.023
4	17.32	535.77	0.77	683.24	0.0000180	0.011
5	19.32	136.26	0.54	245.41	0.0000065	0.003
6	20	0	0	0	0	0.000
7	19.32	136.26	0.54	245.41	0.0000065	0.003
8	17.32	535.77	0.77	683.24	0.0000180	0.011
9	14.14	1171.30	0.82	1400.68	0.0000369	0.023
10	10.00	1999.53	0.83	2369.41	0.0000624	0.040
11	5.18	2964.03	0.82	3536.57	0.0000931	0.059
12	0	3999.07	0.81	4823.19	0.0001269	0.080
13	–5.18	5034.10	0.80	6131.09	0.0001613	0.101
14	–10	5998.60	0.80	7356.38	0.0001936	0.120
15	–14.14	6826.83	0.80	8404.50	0.0002212	0.137
16	–17.32	7462.36	0.79	9201.35	0.0002421	0.149
17	–19.32	7861.87	0.79	9697.30	0.0002552	0.157
18	–20	7998.13	0.79	9865.41	0.0002596	0.160
19	–19.32	7861.87	0.79	9697.30	0.0002552	0.157
20	–17.32	7462.36	0.79	9201.35	0.0002421	0.149
21	–14.14	6826.83	0.80	8404.50	0.0002212	0.137
22	–10	5998.60	0.80	7356.38	0.0001936	0.120
23	–5.18	5034.10	0.80	6131.09	0.0001613	0.101
24	0	3999.07	0.81	4823.19	0.0001269	0.080

A_{wall} = area of wall, m^2

A_{roof} = area of roof, m^2

A_{floor} = area of floor, m^2

$R_{tot,wall}$ = R-value of wall including interior and exterior air films, $m^2 \cdot K/W$

$R_{tot,roof}$ = R-value of roof including interior and exterior air films, $m^2 \cdot K/W$

$R_{tot,floor}$ = R-value of floor including interior and exterior air films, $m^2 \cdot K/W$

For test Cases HE100 through HE210, excluding HE130 (no load test), the peak zone heat load can be used with the maximum temperature difference to determine whether the modeled heat loss rate conforms with Equation B17-17.

The zone heating load due to the required sensible heating of the incoming outdoor air and envelope conduction Q_{Total} is as follows:

$$Q_{Total} = 199.953\ \text{W/K} \times \Delta T \qquad \text{(B17-18)}$$

where

199.953 W/K = overall UA value of the conditioned zone

ΔT = temperature difference between the indoor and outdoor air, K

Table B17-8 presents estimates of peak zone heat load and peak temperature difference for each test case.

If the infiltration mass flow rate necessary to match the target heat loss rate is needed, it can be calculated by substituting the element areas and R-values from the model being tested into Equation B17-17. The specific heat of outdoor air varies slightly for each test case based on the weather data conditions. Table B17-9 contains the specific heat for infiltrating (outdoor) air for each weather file. For the weather files with varying ambient temperature the heating-load weighted-average specific heat is presented, which is appropriate for use in these heating tests. These values are based on the Heyland-Wexler formulation and may differ from those used in models based on ideal gas models.

Copyrighted material licensed to Sei Ito on 2020-06-26 for licensee's use only. All rights reserved. No further reproduction or distribution is permitted. Distributed by Techstreet for ASHRAE, www.techstreet.com

Table B17-7 Heat Load, Efficiency, Fan Power, Fuel and Electricity Consumption for Draft Fan Case

Hour of Day	Temperature, °C	Q_{Total}, W	$\eta_{part\ load}$	$Q_{Furnace}$, W	Fuel Consumption, m^3/h	Electricity, kWh
1	5.18	2764.03	0.82	3358.79	0.0000884	0.214
2	10.00	1799.53	0.83	2175.84	0.0000573	0.209
3	14.14	971.30	0.81	1196.21	0.0000315	0.205
4	17.32	335.77	0.71	472.15	0.0000124	0.202
5	19.32	0	0	0	0	0.200
6	20	0	0	0	0	0.200
7	19.32	0	0	0	0	0.200
8	17.32	335.77	0.71	472.15	0.0000124	0.202
9	14.14	971.30	0.81	1196.21	0.0000315	0.205
10	10.00	1799.53	0.83	2175.84	0.0000573	0.209
11	5.18	2764.03	0.82	3358.79	0.0000884	0.214
12	0	3799.07	0.81	4665.79	0.0001228	0.219
13	–5.18	4834.10	0.81	5997.33	0.0001578	0.224
14	–10	5798.60	0.80	7247.32	0.0001907	0.229
15	–14.14	6626.83	0.80	8318.55	0.0002189	0.233
16	–17.32	7262.36	0.80	9134.20	0.0002404	0.236
17	–19.32	7661.87	0.79	9642.42	0.0002537	0.238
18	–20	7798.13	0.79	9814.78	0.0002583	0.239
19	–19.32	7661.87	0.79	9642.42	0.0002537	0.238
20	–17.32	7262.36	0.80	9134.20	0.0002404	0.236
21	–14.14	6626.83	0.80	8318.55	0.0002189	0.233
22	–10	5798.60	0.80	7247.32	0.0001907	0.229
23	–5.18	4834.10	0.81	5997.33	0.0001578	0.224
24	0	3799.07	0.81	4665.79	0.0001228	0.219

Example mass flow rates have been calculated and are presented in Table B17-9. They have been calculated using Equation B17-17 with the specific heat of infiltrating air from Table B17-9, and assuming the model uses element areas and conductance from Table 5-58 and a convective surface heat transfer coefficient of 20 W/(m^2·K) for all interior and exterior surfaces.

Tested simulation model default interior and exterior surface coefficients are likely to vary from the 20 W/(m^2·K) assumed here. The heat loss rates should be checked to ensure the tested model is modeling the correct heat loss rate. To calculate exact values for the software being tested, the surface coefficients used by the program would be applied in this calculation procedure. Recall that the alternate method of driving heating load with infiltration is provided for simulation programs that do not allow the user to directly input constant surface coefficients and that the effect of surface coefficients is small for surfaces with very high thermal resistances.

B17.2.4 DOE-2.1E [B-99] Simulation Results Using Alternative Space Loading by Infiltration of Section 5.4.1.9. This section provides an example of the application of the alternative method for generating zone loads with infiltration as specified for the furnace test cases in Section 5.4.1.9.

B17.2.4.1 Introduction. Because the DOE-2.1E software does not allow direct specification of the outside heat transfer coefficient for the test zone, the infiltration specification method is adopted for these simulations. The infiltration quantity is specified based on Sections 5.4.1.9.3, B17.2.2, and B17.2.3 to obtain a specific space load per unit of temperature difference between the inside and the outside of the test zone.

The DOE-2 air-change method is used (BDL keyword: INF-METHOD = AIR-CHANGE) and applies the specification for the infiltration cfm per unit area of the zone (BDL keyword: INF-CFM/SQFT).

B17.2.4.2 Building Description in DOE-2. The materials of the walls, floor, and ceiling of the test building were

Copyrighted material licensed to Sei Ito on 2020-06-26 for licensee's use only. All rights reserved. No further reproduction or distribution is permitted. Distributed by Techstreet for ASHRAE, www.techstreet.com

Table B17-8 Estimated Peak Zone Heating Load for Alternate Tests

Case	Weather File	Max. Temp. Diff., °C	Peak Zone Heat Load, W
HE100	HE100	50	–9998
HE110	HE100	50	–9998
HE120	HE120	20	–3999
HE130	HE130	0	0
HE140	HE140	40	–7998
HE150	HE140	40	–7998
HE160	HE140	40	–7998
HE170	HE140	40	–7998
HE210	HE210	45	–8998

Table B17-9 Specific Heat of Infiltrating Air and Estimated Mass Flow Rates

Weather File	Type	Dry Bulb, °C	Dew Point, °C	Humidity Ratio, kg/kg[a]	Specific Heat, J/(K·kg of moist air)[b]	Air Mass Flow Rate, m^3/s
HE100	Constant	–30	–36.2	0.000121	1006	0.1970
HE120	Constant	0	–8.2	0.001888	1008	0.1967
HE130	Constant	20	10.4	0.007877	1013	0.1958
HE140	Varying	0.0	–8.2	0.002988	1007	0.1969
HE210	Varying	–7.6	–12.8	0.001530	1007	0.1968

a. kg moisture per kg dry air
b. Specific heat is average weighted by delta temperature of the heating hours.

specified using the R-value method in DOE-2. The surface-to-surface thermal resistance of each of these three materials was exactly equal to the value given in Table 5-58 of the Standard 140 specifications.

The inside film thermal resistance (convection + radiation) for the walls, floor, and roof was set to a very high value (10^6 h·ft^2·F/Btu). The solar absorptance and longwave emissivity of all the surfaces were set to very small values (10^{-2}). The outside heat transfer coefficient was not directly specified and is internally determined by DOE-2.1E; this is why the infiltration method of Standard 140 is applied.

B17.2.4.3 Tier 1 Test Cases. Results for Tier 1 test cases are shown in Tables B17-10 and B17-11. The total fan energy (electricity) consumption includes circulation fan energy and draft fan energy. All the test cases are modeled with system type PSZ (packaged single zone) in DOE-2.1E. The results in Table B17-10 also show the space thermal conductance (UA) in units of W/K. This space load is the furnace load less the heat gain from the circulation fan, divided by an equivalent temperature difference between the indoor air and the air outside of the space. For all the test cases, the infiltration rate is set to match UA = 199.95 W/K as closely as possible in accordance with Section 5.4.1.9.3.

The temperature difference between the indoor air and outdoor air used for calculating the space UA is 50°C for cases HE100 and HE110 and 20°C for Cases HE120 through HE170.

B17.2.4.3.1 Case HE150, Circulating Fan Test. Using system PSZ, it is possible to model a supply fan in continuous mode. DOE-2 automatically accounts for the reduction in the space-heating load caused by the heat gain from the fan to the supply airstream. Because of this heat gain from the fan, the furnace load in Case HE150 is lower than that for Case HE140 (where fan power = 0). Table B17-12 shows the total run-time hours of the furnace reported by DOE-2 in its SS-Q output report. Using this run time, and a circulation fan power of 200 W, it is possible to find the total energy consumption of the circulation fan. Very good agreement is found in this case between fan energy reported directly by DOE-2 in its SS-P output report and that calculated from the SS-Q report run-time results.

B17.2.4.3.2 Case HE160, Cycling Circulating Fan Test. Using system PSZ it is possible to model a supply fan in the "auto" or intermittent mode. The supply fan contributes toward satisfying the heating load of the zone; therefore, the load on the furnace will be less than when fan power = 0 (as in Case HE140). In Case HE160, the calculated fan energy based on run time in Table B17-12 is 1.73% less than that reported by DOE-2 in its SS-P report.

Copyrighted material licensed to Sei Ito on 2020-06-26 for licensee's use only. All rights reserved. No further reproduction or distribution is permitted. Distributed by Techstreet for ASHRAE, www.techstreet.com

Table B17-10 DOE-2.1E Results for Furnace Tier 1 and Tier 2 Test Cases: Loads, Consumptions, and Other Supporting Output

Test Case	Furnace Load [a], GJ	Furnace Input [a], GJ	Fuel Flow Rate, m^3/s	Equivalent Efficiency	Total Fan Energy [b], kWh	Space UA, W/K	Infiltration Rate, ach
Tier 1							
HE100	77.755	78.417	0.0002654	0.992	0.000	199.988	0.698
HE110	77.755	98.020	0.0003317	0.793	0.000	199.988	0.698
HE120	31.129	38.556	0.0001305	0.807	0.000	200.159	0.701
HE130	0.155	0.142	0.0000000				
HE140	31.123	38.764	0.0001312	0.803	0.000	200.125	0.696
HE150	29.565	36.820	0.0001246	0.803	432.080	200.108	0.695
HE160	30.490	37.962	0.0001285	0.803	172.385	200.045	0.695
HE170	29.565	36.820	0.0001246	0.803	473.13	200.107	0.695
Tier 2							
HE210	42.057	52.371	0.0001772	0.803	298.918	200.000	0.705
HE220	39.757	49.466	0.0001674	0.804	281.157		0.705
HE230	34.372	43.219	0.0001462	0.795	478.408		0.705

a. From SS-Q report
b. From SS-P and SS-Q reports

Table B17-11 DOE-2.1E Results for Furnace Tier 1 and Tier 2 Test Cases: Average, Minimum, and Maximum Space Temperatures

Test Case	Average Temperature [a], °C	Maximum Temperature [b], °C	Minimum Temperature [b], °C
Tier 1			
HE100	19.83	19.83	19.83
HE110	19.83	19.83	19.83
HE120	19.87	19.89	19.89
HE130	20.10	20.11	20.11
HE140	20.00	20.11	19.89
HE150	20.11	20.61	19.94
HE160	20.03	20.11	19.94
HE170	20.11	20.61	19.94
Tier 2			
HE210	19.98	20.06	19.89
HE220	18.53	20.11	14.94
HE230	15.64	20.06	3.22

a. From SS-K report
b. From SS-F report

Copyrighted material licensed to Sei Ito on 2020-06-26 for licensee's use only. All rights reserved. No further reproduction or distribution is permitted. Distributed by Techstreet for ASHRAE, www.techstreet.com

Table B17-12 Calculated Fan Energy Based on Run-Time in the DOE-2 SS-Q Report

Test Case	Run Time [a], h	Circulation Fan Energy, kWh	Draft Fan Energy, kWh	Total Fan Energy, kWh	Difference v. DOE-2 SS-P Report, %
HE150	821	432.00	0	432.00	0.02
HE160	847	169.40	0	169.40	1.73
HE170	821	432.00	41.05	473.05	0.01
HE210	1168	233.60	58.40	292.00	2.31
HE220	1104	220.80	55.20	276.00	1.83
HE230	1910	382.00	95.50	477.50	0.19

a. From SS-Q report

B17.2.4.3.3 Case HE170, Draft Fan Test. The draft fan is specified as a furnace auxiliary power (DOE-2 BDL command: "FURNACE-AUX-KW"). Using the draft fan power of 50 W and the run time from the SS-Q report, it is possible to calculate the draft fan energy. In this case, the agreement between total fan energy calculated from the SS-Q report and reported in the SS-P report is very good, as shown in Table B17-12.

B17.2.4.4 Tier 2 Test Cases. Results for Tier 2 test cases are also shown in Tables B17-10 and B17-11. Fan energy is the sum of circulation fan energy and draft fan energy when one is specified. The temperature difference between the indoor and outdoor air for calculating the space UA is 27.6°C for Case HE210. The same infiltration rate for Case HE210 is used for cases HE220 and HE230.

Table B17-12 shows the calculated circulation and draft fans energy consumptions based on the run-time results from the SS-Q report. Table B17-12 also shows the percentage difference between the total fan energy from the DOE-2 reports (SS-P for circulation fan and SS-Q for draft fan) and that calculated using the run time from the SS-Q report. These results show that for cases HE210 and HE220 (circulation fan in intermittent mode) this percentage difference in reported fan energy is ~2%. These differences are mainly caused by discrepancies in the circulation fan energy and not the draft fan energy. This discrepancy in the fan energy requires further investigation.

B17.3 For Air-Side HVAC Equipment Analytical Verification Tests, Cases AE101 through AE445

B17.3.1 Introduction

B17.3.1.1 The full discussion regarding production of quasi-analytical solution results and example simulation results is included in *Airside HVAC BESTEST* [B-6]. Portions of that discussion have been included here. The quasi-analytical solutions and programs used to generate the example simulation results are listed in Table B17-13. Table B17-13 is organized similarly to Table B17-1; see Section B17.1.1.1.2 for a description of the information included in the table.

B17.3.1.2 The availability of quasi-analytical solutions (see Section B17.3.2) greatly helped to identify and correct errors in the simulations so that errors are minimized in the final simulation results. Also, to minimize the potential for user error in the simulations, when feasible more than one modeler developed input files for each program. Improvements to simulation programs or simulation inputs were subject to requirements described in Section B17.1.1.1.4.

B17.3.1.3 The quasi-analytical solutions workbook and input files used to generate the simulation results are provided with the accompanying electronic media; see the README*.DOCX file.

B17.3.2 Quasi-Analytical Solution Results. The quasi-analytical solution results given in Informative Annex B16, Section B16.7, were developed as part of a collaboration with the ASHRAE Standard 140 committee (SSPC 140) and other international software developers and participants. The importance of having analytical or quasi-analytical solution results is discussed in Informative Annex B16, Section B16.2. The quasi-analytical solutions are based on the initial work of ASHRAE RP 865 [B-8] with further vetting and development by National Renewable Energy Laboratory (NREL) to merge the original RP 865 solution spreadsheets into a single set of quasi-analytical solutions. The vetting process followed the procedure for developing analytical and quasi-analytical solutions defined by NREL in previous work [B-16] and involved checking all original equations by a third, independent analyst. Spreadsheet results disagreements from the original work were reconciled by the third analyst; where needed, some details were reconciled in collaboration with the original solution developers. The vetting process also included comparison with previous solutions as quasi-analytical solution versions progressed. The quasi-analytical solution results also have good agreement with two of the simulation models that were able to most closely match the assumptions of the quasi-analytical solution, and observable differences between the quasi-analytical solutions and the other simulation programs were explainable by modeling assumptions of those programs consistent with the test-case diagnostics. Perfect agreement among simulations and the quasi-analytical solution results is not necessarily expected because many programs contain simplifying assumptions to ease calculation burden (e.g., constant air density), and the quasi-analytical solutions contain idealized simplifying assumptions (in order to be solved analytically) that cannot always be exactly reproduced by some simulation programs that are conceived and hardcoded with more realistic

Copyrighted material licensed to Sei Ito on 2020-06-26 for licensee's use only. All rights reserved. No further reproduction or distribution is permitted. Distributed by Techstreet for ASHRAE, www.techstreet.com

Table B17-13 Participating Organizations and Computer Programs, Air-Side HVAC Analytical Verification Test Cases AE101 through AE445

Model	Authoring Organization	Implemented by	Abbreviation
Quasi-Analytical Solution (QAS)	PSU [a]/UNO [b]/TAMU [c]/NREL [d]/JNA [e]/ MDK [f], United States	NREL [d]/JNA [e]/MDK [f], United States	QAS/PSU-TAMU-NREL
DEEAP [g] 1.1.2	AAON, Inc., United States	AAON, Inc., United States	DEEAP/AAON
DeST [h] 2	Tsinghua University, China	Tsinghua University, China / LBNL [i], United States	DeST/TsinghuaU-LBNL
DOE-2.2 V48L	JJH [j]/LBNL [i]/UC [k], United States	NREL [d]/JNA [e]/MDKI [f], United States	DOE-2.2/NREL
EnergyPlus 8.2.0	DOE-BT [l], United States	GARD Analytics, Inc., United States	EnergyPlus/GARD
IES-VE [m] 2014.2	IES [n], United Kingdom	IES [n], United Kingdom	IES-VE/IES
LCEM [o] 3.10	MLIT [p], Japan	TTE [q], Japan	LCEM/MLIT-TTE
TRNSYS 17.01.0028	TESS[r]/UWM [s], United States	TESS [r], United States	TRNSYS/TESS

a. The Pennsylvania State University (PSU), United States
b. University of Nebraska, Omaha (UNO), United States
c. Texas A&M University (TAMU), United States
d. National Renewable Energy Laboratory (NREL), United States
e. J. Neymark & Associates (JNA), United States
f. Mike D. Kennedy, Inc. (MDK), United States
g. Detailed Energy and Economic Analysis Program (DEEAP)
h. Designer's Simulation Toolkit (DeST)
i. Lawrence Berkeley National Laboratory (LBNL), United States
j. James J. Hirsch & Associates (JJH), United States
k. University of California (UC), United States
l. U.S. Department of Energy, Office of Building Technologies (DOE-BT), Energy Efficiency and Renewable Energy, United States
m. Integrated Environmental Solutions, Virtual Environment (IES-VE), United Kingdom
n. Integrated Environmental Solutions (IES), United Kingdom
o. Life Cycle Energy Management (LCEM)
p. Ministry of Land, Infrastructure, Transportation and Tourism (MLIT), Japan
q. Takasago Thermal Engineering (TTE), Japan
r. Thermal Energy System Specialists (TESS), United States
s. University of Wisconsin, Madison (UWM), United States

assumptions. Full documentation of the quasi-analytical solutions (including final spreadsheet files) and their development are included in *Airside HVAC BESTEST* [B-6], Part II, and its related accompanying files.

B17.3.3 Selection of Programs for Producing Example Simulation Results. The criteria for selection of programs used for producing example results required that

a. the program be a true simulation based on hourly weather data and calculational time increments of one hour or less and
b. the program be representative of the state of the art in whole-building energy simulation as defined by the SSPC 140 working-group participants making the selection.

The programs used to generate example results have been subjected to extensive prior validation testing. Such testing includes the preliminary trials of *Airside HVAC BESTEST* [B-6] that ran from 2011 through 2015. The programs (to various extents) were also subjected to other comparative, empirical validation and/or analytical verification tests, such as *HVAC BESTEST*, Volume 1 [B-16], *HVAC BESTEST*, Volume 2 [B-17], *Furnace BESTEST* [B-58], and those referenced in *HVAC BESTEST*, Volume 1, *IEA BESTEST*, International Building Performance Simulation Association (IBPSA) proceedings and in the 2017 *ASHRAE Handbook—Fundamentals*, Chapter 19, Section 8 [B-16,B-29,B-47,B-48,B-101].

Copyrighted material licensed to Sei Ito on 2020-06-26 for licensee's use only. All rights reserved. No further reproduction or distribution is permitted. Distributed by Techstreet for ASHRAE, www.techstreet.com

(This annex is not part of this standard. It is merely informative and does not contain requirements necessary for conformance to the standard. It has not been processed according to the ANSI requirements for a standard and may contain material that has not been subject to public review or a consensus process. Unresolved objectors on informative material are not offered the right to appeal at ASHRAE or ANSI.)

INFORMATIVE ANNEX B18 ALTERNATIVE SECTION 7 GROUND COUPLING ANALYSIS CASE DESCRIPTIONS FOR DEVELOPING ADDITIONAL EXAMPLE RESULTS FOR CASES L302B, L304B, L322B, AND L324B

The results for two types of ground coupling models are included in the results of Informative Annex B20 to effectively widen the range of example results for cases that include ground coupling analysis. This was done in case a residential modeling tool is using a more sophisticated algorithm than the application of ASHRAE steady-state heat transfer coefficients.

For the more detailed simulations of ground coupling in Cases L302B, L304B, L322B, and L324B, the following case-by-case discussion describes material properties for modeling thermal mass of portions of the building envelope in thermal contact with the ground. While this more detailed method is not verified, it does serve to incorporate the effects of mass and solar radiation incident on soil directly into the simulations used to develop example results, thus reducing loads versus the various steady-state ASHRAE methods.

B18.1 Soil Modeling and Solar Effects. In the tables that follow, soil thicknesses may be regarded as curved path lengths for one-dimensional heat conduction between a concrete surface/adjacent soil boundary and a soil/ambient air boundary. Thus, soil is modeled as a large amount of mass in contact with ambient air. Soil conductivity is based on the 9.6 Btu·in/(h·ft^2·°F) cited in the 1993 *ASHRAE Handbook—Fundamentals* [B-26].

Solar effects on soil are also important (especially regarding shorter conduction path lengths encountered with a slab-on-grade or the upper portion of a below-grade wall). Soil adjacent to a house is assumed as shaded by the house on average roughly half the time the sun is present. Exterior solar absorptance of the soil surface is assumed as 0.6. Exterior infrared emittance of soil is assumed as 0.9. The adjacent-soil-to-house-wall view factors are small so that infrared radiative exchange is assumed to occur only between soil and sky.

B18.2 Case L302B Uninsulated Slab-on-Grade. This case is **exactly as Case L302A, except** that Table B18-1 is used in place of Table 7-36.

The soil thickness in Table B18-1 is based on the ASHRAE perimeter method [B-26] for a metal stud wall (normalized for 1539 ft^2 floor area) less listed R-values of surface coefficients and the concrete slab, and assuming the listed soil conductivity.

B18.3 Case L304B Slab-on-Grade with Perimeter Insulation. This case is **exactly as Case L304A**, except that Table B18-2 replaces Table 7-38.

The perimeter insulation R-value of Table B18-2 is based on the ASHRAE perimeter method for a metal stud wall with R-5.4 perimeter insulation from edge to footer normalized for 1539 ft^2 floor area, less the R-values of the listed surface coefficients, concrete slab, and soil layers.

B18.4 Case L322B Uninsulated Conditioned Basement. This case is **exactly as Case L322A, except** that Table B18-3 replaces Table 7-42 and just the below-grade concrete wall description of Table 7-41.

For below-grade walls, the associated soil thicknesses are taken directly from the 1993 *ASHRAE Handbook—Fundamentals* (Table 14, p. 25.11) [B-26]. Note that the listed below-grade soils are for parallel conduction paths, each representing 1 ft of wall height, except for the deepest increment, which represents 7 in. of wall height.

For the below-grade slab floor, soil thickness is based on the 1993 *ASHRAE Handbook—Fundamentals* (Table 15, p. 25.11) [B-26] less R-values of surface coefficients and concrete slab and multiplied by the listed soil conductivity.

B18.5 Case L324B Interior Insulated Conditioned Basement. This case is **exactly as Case L324A**, except that Table B18-4 replaces just the below-grade concrete wall description of Table 7-46.

Copyrighted material licensed to Sei Ito on 2020-06-26 for licensee's use only. All rights reserved. No further reproduction or distribution is permitted. Distributed by Techstreet for ASHRAE, www.techstreet.com

Table B18-1 Material Descriptions, Slab-on-Grade Floor—Case L302B

FLOOR, SLAB ON GRADE, UNINSULATED WITH GROUND MASS						
	Thickness	R	U	k	DENSITY	c_p
ELEMENT (inside to outside)	in.	h·ft^2·°F/Btu	Btu/(h·ft^2·°F)	Btu/(h·ft·°F)	lb/ft^3	Btu/(lb·°F)
Interior surface coefficient (Note 1)		0.765	1.307			
Carpet with fibrous pad		2.080	0.481			
Concrete slab	4.0	0.320	3.125	1.0417	140.0	0.20
Soil (Note 2)	58.3	6.070	0.165	0.8000	94.0	0.19
Exterior surface coefficient		0.174	5.748			
Total air-air		9.409	0.106			

Note 1: Average of ASHRAE heating and cooling coefficients.

Note 2: Soil thickness based on ASHRAE perimeter method for a metal stud wall (normalized for 1539 ft^2 floor area) less R-values of surface coefficients and concrete slab assuming the listed soil conductivity. The resulting soil thickness can be thought of as an average curved heat flow path through the soil to ambient air. As a simplification, the layer of sand typically below the concrete slab and the poured foundation wall is assumed to have the same material properties as soil.

Table B18-2 Material Descriptions, Slab-on-Grade Floor—Case L304B

FLOOR, SLAB ON GRADE, PERIMETER INSULATION WITH GROUND MASS						
(Note 1)	Thickness	R	U	k	DENSITY	c_p
ELEMENT (inside to outside)	in.	h·ft^2·°F/Btu	Btu/(h·ft^2·°F)	Btu/(h·ft·°F)	lb/ft^3	Btu/(lb·°F)
Interior surface coefficient (Note 2)		0.765	1.307			
Carpet with fibrous pad		2.080	0.481			
Concrete slab	4.0	0.320	3.125	1.0417	140.0	0.20
Soil (Note 3)	**29.1**	**3.035**	**0.330**	**0.8000**	**94.0**	**0.19**
Perimeter insulation (Note 4)		**9.327**	**0.107**			
Soil (Note 3)	**29.1**	**3.035**	**0.330**	**0.8000**	**94.0**	**0.19**
Exterior surface coefficient		0.174	5.748			
Total air-air		**18.736**	**0.053**			

Note 1: Changes to Case L302B are highlighted with bold font.

Note 2: Average of ASHRAE heating and cooling coefficients.

Note 3: Total soil path length from Case L302B divided by two.

Note 4: Perimeter insulation R-value based on ASHRAE perimeter method for metal stud wall with R-5.4 perimeter insulation from edge to footer in Colorado Springs normalized for floor area, less R-values of surface coefficients, concrete slab, and soil layers.

Copyrighted material licensed to Sei Ito on 2020-06-26 for licensee's use only. All rights reserved. No further reproduction or distribution is permitted. Distributed by Techstreet for ASHRAE, www.techstreet.com

Table B18-3 Material Descriptions, Basement Below Grade Wall and Slab Floor—Case 322B

BASEMENT BELOW GRADE WALL (inside to outside) WITH GROUND MASS						
	Thickness	R	U	k	DENSITY	c_p
ELEMENT	in.	h·ft^2·°F/Btu	Btu/(h·ft^2·°F)	Btu/(h·ft·°F)	lb/ft^3	Btu/(lb·°F)
BELOW GRADE CONCRETE WALL						
Interior surface coefficient		0.685	1.460			
Poured concrete	6.0	0.480	2.083	1.0417	140.0	0.20
Below grade soil is in parallel paths for listed increments of depth. (Note 1)						
Below grade soil 0 to 1 ft depth	8.16	0.850	1.176	0.8000	94.0	0.19
Below grade soil 1 to 2 ft depth	27.2	2.838	0.352	0.8000	94.0	0.19
Below grade soil 2 to 3 ft depth	46.6	4.850	0.206	0.8000	94.0	0.19
Below grade soil 3 to 4 ft depth	66.2	6.900	0.145	0.8000	94.0	0.19
Below grade soil 4 to 5 ft depth	84.6	8.813	0.113	0.8000	94.0	0.19
Below grade soil 5 to 6 ft depth	103.8	10.813	0.092	0.8000	94.0	0.19
Below grade soil 6 to 6 ft 7 in. depth	123.4	12.850	0.078	0.8000	94.0	0.19
Exterior surface coefficient		0.174	5.748			
Total air-air (Note 2)		5.481	0.182			
BASEMENT BELOW SLAB FLOOR (inside to outside) WITH GROUND MASS						
Interior surface coefficient		0.765	1.307			
Poured concrete	4.0	0.320	3.125	1.0417	140.0	0.20
Below grade soil below slab (Note 3)	380.1	39.592	0.025	0.8000	94.0	0.19
Exterior surface coefficient		0.174	5.748			
Total air-air (Note 4)		40.851	0.0245			

Note 1: Listed thickness is the 1993 *ASHRAE Handbook—Fundamentals* (Table 14, p.25.11) (Reference B-26).conduction path length. Also each layer is only 1 ft high, except for the deepest layer, which is only 7 in. high.

Note 2: Although ASHRAE's soil conductivity was applied, overall U-value calculated by summing parallel heat flow through each increment of soil depth comes out 7% higher than the value of Table 7-41, which was obtained using just the ASHRAE steady-state heat transfer coefficients.

Note 3: Soil thickness based on 1993 *ASHRAE Handbook—Fundamentals* (Table 15, p.25.11) (Reference B-26) less R-values of surface coefficients and concrete slab assuming the listed soil conductivity. The resulting soil thickness can be thought of as an average curved heat-flow path through the soil to ambient air. As a simplification, the layer of sand typically below the concrete slab is assumed to have the same material properties as soil.

Note 4: This is the overall heat loss interpolated from 1993 *ASHRAE Handbook—Fundamentals* (Table 15, p. 25.11) (Reference B-26).

Copyrighted material licensed to Sei Ito on 2020-06-26 for licensee's use only. All rights reserved. No further reproduction or distribution is permitted. Distributed by Techstreet for ASHRAE, www.techstreet.com

Table B18-4 Material Descriptions, Basement Below Grade Wall—Case L324B

BASEMENT BELOW GRADE WALL (inside to outside) WITH GROUND MASS						
(Note 1)	Thickness	R	U	k	DENSITY	c_p
ELEMENT	in.	h·ft²·°F/Btu	Btu/(h·ft²·°F)	Btu/(h·ft·°F)	lb/ft³	Btu/(lb·°F)
Interior surface coefficient		0.685	1.460			
Plasterboard	**0.5**	**0.450**	**2.222**	**0.0926**	**50.0**	**0.26**
Fiberglass batt (Note 2)	**3.5**	**11.000**	**0.091**	**0.0265**	**0.6**	**0.20**
Frame 2×4, 16 in. on centers (Note 3)	**3.5**	**4.373**	**0.229**	**0.0667**	**32.0**	**0.33**
Batt/frame composite (Note 4)		**9.989**	**0.100**			
Poured concrete	6.0	0.480	2.083	1.0417	140.0	0.20
Below grade soil is in parallel paths for listed increments of depth. (Note 5)						
Below grade soil 0 to 1 ft depth	8.16	0.850	1.176	0.8000	94.0	0.19
Below grade soil 1 to 2 ft depth	27.2	2.838	0.352	0.8000	94.0	0.19
Below grade soil 2 to 3 ft depth	46.6	4.850	0.206	0.8000	94.0	0.19
Below grade soil 3 to 4 ft depth	66.2	6.900	0.145	0.8000	94.0	0.19
Below grade soil 4 to 5 ft depth	84.6	8.813	0.113	0.8000	94.0	0.19
Below grade soil 5 to 6 ft depth	103.8	10.813	0.092	0.8000	94.0	0.19
Below grade soil 6 to 6 ft 7 in. depth	123.4	12.850	0.078	0.8000	94.0	0.19
Exterior surface coefficient		0.174	5.748			
Total air-air (Note 6)		**15.920**	**0.063**			

Note 1: Changes to Case L322B are highlighted with bold font.

Note 2: Insulated section only, 90% insulated area section.

Note 3: Framed section only, 10% framed area section.

Note 4: Due to the complexity of this below-grade-wall construction, the insulated framed basement wall was modeled using this combined resistance in the example results simulations. The R-value shown is the total air-air composite section below-grade basement wall R-value given in Table 7-46, less the Table 7-46 R-values for interior film coefficient, plasterboard, and "wall and soil."

Note 5: Listed thickness is the 1993 *ASHRAE Handbook—Fundamentals* (Table 14, p.25.11) (Reference B-26) conduction path length. Also each layer is only 1 ft high, except for the deepest layer, which is only 7 in. high.

Note 6: The overall U-value calculated by summing parallel heat flow through each increment of soil depth comes out 2% higher than the value of Table 7-46.

Copyrighted material licensed to Sei Ito on 2020-06-26 for licensee's use only. All rights reserved. No further reproduction or distribution is permitted. Distributed by Techstreet for ASHRAE, www.techstreet.com

(This annex is not part of the standard. It is merely informative and does not contain requirements necessary for conformance to the standard. It has not been processed according to the ANSI requirements for a standard and may contain material that has not been subject to public review or a consensus process. Unresolved objectors on informative material are not offered the right to appeal at ASHRAE or ANSI.)

INFORMATIVE ANNEX B19
DISTRIBUTION OF SOLAR RADIATION IN THE SECTION 7 PASSIVE SOLAR BASE CASE (P100A)

Solar energy transmitted through windows is distributed in the following manner.

Solar lost due to cavity albedo and solar directly absorbed by air (lightweight furnishings) are attributed to total (direct plus diffuse) radiation in proportion to the fractions of direct and diffuse solar radiation transmitted through windows. Direct and diffuse transmitted fractions for south windows were calculated using SERIRES/SUNCODE [B-24] and Denver TMY weather data.

The portion of direct beam radiation not absorbed by lightweight furnishings or lost from cavity albedo is assumed to initially hit only the massive surfaces (floor and interior brick walls) and is distributed among these surfaces according to their areas. Direct beam radiation that is reflected by the massive surfaces is assumed to be diffusely reflected and is distributed among all interior surfaces in proportion to their areas.

Transmitted diffuse radiation not absorbed by lightweight furnishings or lost from cavity albedo is distributed among all interior surfaces in proportion to their areas.

Resulting interior solar distribution fractions are shown in Table B19-1.

Copyrighted material licensed to Sei Ito on 2020-06-26 for licensee's use only.
All rights reserved. No further reproduction or distribution is permitted. Distributed by Techstreet for ASHRAE, www.techstreet.com

Table B19-1 Interior Surface Distribution of Solar Radiation for Case P100A

Properties/Assumptions			
Alpha, walls	0.6		
Solar to air	0.175		
Solar lost	0.0240	(Note 1)	
Direct beam fraction	0.7097	(Note 2)	
Diffuse fraction	0.2903	(Note 2)	
Direct beam floor depth, ft	14	(Note 3)	
Direct beam to floor	0.543	(Note 4)	
Direct beam to mass wall	0.457	(Note 4)	
Floor area fraction	0.2469	(Note 5)	
Mass wall area fraction	0.1078	(Note 5)	
	Relative Fractions (Note 6)	**Absolute Fractions** (Note 7)	
Fraction of Transmitted Direct Beam Radiation Absorbed			
Floor	0.2609	0.1852	(Note 8)
Interior mass wall	0.2197	0.1559	(Note 8)
Remaining reflected	0.3204	0.2274	
Fraction of Diffusely Reflected Beam Radiation Absorbed			
Floor	0.2469	0.0561	
Interior mass wall	0.1078	0.0245	
Remaining opaque surfaces	0.6453	0.1467	
Fraction of Transmitted Diffuse Radiation Absorbed			
Floor	0.1978	0.0574	
Interior mass wall	0.0864	0.0251	
Remaining opaque surfaces	0.5169	0.1500	
Total Fractions			
Solar to air		0.1750	
Solar lost		0.0240	
Floor		0.2987	
Interior mass wall		0.2055	
Remaining opaque surfaces		0.2968	
Total		1.0000	

Note 1: From Informative Annex B7, Section B7.2.
Note 2: From SUNCODE south window annual transmitted solar radiation, based on Denver TMY weather data.
Note 3: This is the location depth for the mass interior walls.
Note 4: Fraction of initially transmitted direct beam radiation incident on named surface after subtracting out solar-to-air and solar lost.
Note 5: Used for diffuse radiation distribution, based on full floor area.
Note 6: Fraction of the specific type of radiation noted below (e.g., direct beam radiation). Transmitted radiation relative fractions assume solar lost and solar to air noted above.
Note 7: Fraction of total direct plus diffuse transmitted radiation.
Note 8: Fraction of "first bounce" absorbed by named surface. Based on: 1 – (solar to air) – (solar lost) × (direct beam fraction to named surface) × (alpha walls).

Copyrighted material licensed to Sei Ito on 2020-06-26 for licensee's use only.
All rights reserved. No further reproduction or distribution is permitted. Distributed by Techstreet for ASHRAE, www.techstreet.com

(This annex is not part of the standard. It is merely informative and does not contain requirements necessary for conformance to the standard. It has not been processed according to the ANSI requirements for a standard and may contain material that has not been subject to public review or a consensus process. Unresolved objectors on informative material are not offered the right to appeal at ASHRAE or ANSI.)

INFORMATIVE ANNEX B20 EXAMPLE RESULTS FOR SECTION 7 TEST PROCEDURES

The example results from three detailed building energy simulation programs for the test cases of Section 7.2 are presented in the accompanying file RESULTS7-2.XLS in tabular and graphic form as described below. These results can be used for comparison with the software being tested. Alternatively, a user can run a number of different programs through the Section 7.2 test cases and draw comparisons from those results independently or in conjunction with the results listed here.

The building energy simulation computer programs used to generate example results are described in Informative Annex B21. These computer programs have been subjected to a number of analytical verification, empirical validation, and comparative testing studies. However, there is no such thing as a completely validated building energy simulation computer program. All building models are simplifications of reality. The philosophy here is to generate a range of results from several programs that are generally accepted as representing the state of the art in whole-building energy simulation programs. Regarding the presented results, to the extent possible, input errors or differences have been eliminated. Thus, for a given case, the range of differences between results presented in Informative Annex B20 represents algorithmic differences among these computer programs for the comparative building thermal fabric tests of Section 7.2. For any given case, a tested program may fall outside of this range without necessarily being incorrect. However, it is worthwhile to investigate the source of significant differences, as it is the collective experience of the authors of this standard that such differences often indicate problems with the software or its use, including, but not limited to the following:

a. User input error, where the user misinterpreted or misentered one or more program inputs
b. Inadequate or faulty documentation
c. Problem with a particular algorithm in the program
d. One or more program algorithms used outside their intended range

Also, for any given case, a program that yields values in the middle of the range established by the example results should not be perceived as better or worse than a program that yields values at the borders of the range.

For the convenience of users who wish to plot or tabulate their results along with the example results, an electronic version of the example results has been included with the file RESULTS7-2.XLS on the accompanying electronic media. Documentation regarding RESULTS7-2.XLS is included in RESULTS7-2.DOCX; a summary printout is included in Informative Annex B10, Section B10.7.

For generating these results, along with using consistent modeling methods, the simulations were conducted using the most detailed modeling methods allowed by the software, within the constraints of the test specification. For a summary of how example results were developed, see Informative Annex B21. For more information about the example results, see *HERS BESTEST*[B-39].

B20.1 Results Overview. Tier 1 and Tier 2 example results are included in the figures and tables of Section B20.4. These results include tables and graphs of annual heating and cooling loads and tables of monthly heating and cooling loads. Example results shown in charts are automatically adjusted for seasonal comparison for heating and cooling seasons identified by the tested software. Additional "delta" tables and graphs show the differences between annual loads (sensitivity to variations) for each case relative to an appropriate base case.

In the example results, the following convention identifies the climate corresponding to a result:

- Cases ending in "AC" (e.g., L100AC) are heating load results for Colorad.TMY weather data.
- Cases ending in "AL" (e.g., L100AL) are sensible cooling load results for Lasvega.TMY weather data.

Sensitivity (or "delta") results are listed using two case numbers separated by a minus sign; e.g., "L120AC – L100AC" is the difference between Case L120A (Section 7.2.2.2) and Case L100A (Section 7.2.1).

Because example results for slab-on-grade ground coupling include two sets of results generated using Colorad.TMY weather data (see Informative Annex B21, Section B21.1), the following labeling convention applies to Cases L302 and L304:

- Cases ending in "BC" (e.g., L302BC) are additional outputs using more detailed ground coupling methods.
- Use of the "AB" suffix in figures designates the combined results of specific "AC" and "BC" outputs (e.g., L302AB includes all L302AC and L302BC outputs).

Example results for basement ground coupling include four sets of results generated using Colorad.TMY weather data. These additional results were required to cover all modeling approaches resulting from two possible ground coupling models and two possible zoning models. The following labeling convention applies to Cases L322 and L324:

- Cases ending in "A1" (e.g., L322A1) use a simplified method (see Section 7.2.2.12) for modeling ground coupling with the entire building modeled as a single zone.
- Cases ending in "A2" (e.g., L322A2) use a simplified method (see Section 7.2.2.12) for modeling ground coupling with the main floor and basement modeled as separate zones.
- Cases ending in "B1" (e.g., L322B1) use more detailed ground coupling methods (see Informative Annex B18, Section B18.4) with the entire building modeled as a single zone.

Copyrighted material licensed to Sei Ito on 2020-06-26 for licensee's use only. All rights reserved. No further reproduction or distribution is permitted. Distributed by Techstreet for ASHRAE, www.techstreet.com

- Cases ending in "B2" (e.g., L322B2) use more detailed ground coupling methods (see Informative Annex B18, Section B18.4) with the main floor and basement modeled as separate zones.
- Use of the "AB" suffix in figures designates the combined results of specific "A1," "A2," "B1" and "B2" outputs (e.g., L322AB includes the L322A1, L322A2, L322B1 and L322B2 outputs).

Because there are three example simulation programs, there are a total of 12 example outputs for each basement case.

B20.2 Comparing with Programs that Designate Heating and Cooling Seasons. Tables and charts of example monthly heating and cooling load results are provided for comparing residential modeling tools that designate heating and cooling seasons. Within RESULTS7-2.XLS, example results shown in charts are automatically adjusted for seasonal comparison for heating and cooling seasons identified by the tested software. The automatic adjustment simply sums the appropriate example monthly load results for the given heating or cooling season. For comparing heating or cooling seasons, or both, beginning/ending during midmonth, the automatic adjustment linearly interpolates the monthly example results for given months as appropriate. "Delta" results are calculated automatically for the example results and test program results by taking the differences of the seasonal sum of results (sums per above). Automated calculations may be tracked within RESULTS7-2.XLS by beginning with the sheet with tab label "PlotData."

B20.3 Nomenclature for Informative Annex B20 and RESULTS7-2.XLS

ABS	Absolute value
Apr.	April
Aug.	August
BESTEST	Building Energy Simulation Test and Diagnostic Method
BLAST 3.0	U.S. Army Building Loads Analysis and System Thermodynamics system, version 3.0, level 215
BLAST 3.0, max	BLAST 3.0 maximum of slab or basement test cases results
BLAST 3.0, min	BLAST 3.0 minimum of slab or basement test cases results
Btu	British thermal unit
Clg.	Cooling
CO	Colorado
Coeff.	Coefficient
DaysInMo	Days in month
Dec.	December
Delta	Results difference
DOE-2.1E	DOE-2.1E version W54
DOE-2.1E, max	DOE-2.1E maximum of slab or basement test cases results
DOE-2.1E, min	DOE-2.1E minimum of slab or basement test cases results
Dif.	Difference
Feb.	February
HERS	Home Energy Rating System
Htg.	Heating
Jan.	January
Jul.	July
Jun.	June
Mar.	March
Max.	Maximum of example results
MBtu	Million British thermal units
Mean	Mean of example results
Min.	Minimum of example results
MoEndJD	Month end julian date
Nov.	November
NV	Nevada
Oct.	October
Sep.	September
SRES/SUN 5.7	SERIRES/SUNCODE 5.7
SRES/SUN, max	SERIRES/SUNCODE 5.7 maximum of slab or basement test cases results
SRES/SUN, min	SERIRES/SUNCODE 5.7 minimum of slab or basement test cases results
T1	Tier 1
T2	Tier 2
TMY	Typical Meteorological Year
Tot.	Total
y	Year

B20.4 Tier 1 and Tier 2 Example Results. Tables B20-1, B20-2, and B20-3 show the Tier 1 and Tier 2 example results tables and figures included in RESULTS7-2.XLS.

Copyrighted material licensed to Sei Ito on 2020-06-26 for licensee's use only. All rights reserved. No further reproduction or distribution is permitted. Distributed by Techstreet for ASHRAE, www.techstreet.com

Table B20-1 B20.4 Annual Results Tables

Table	Title	Cell Range (within sheet "Tables_B20")
B20-1	HERS BESTEST Tier 1 Example Results—Annual or Seasonal Heating Loads (10^6 Btu/y) for Colorado Springs, CO	B2–I28
B20-2	HERS BESTEST Tier 1 Example Results—Delta Annual or Seasonal Heating Loads (10^6 Btu/y) for Colorado Springs, CO	B30–I55
B20-3	HERS BESTEST Tier 1 Example Results— Annual or Seasonal Sensible Cooling Loads (10^6 Btu/y) for Las Vegas, NV	B57–I71
B20-4	HERS BESTEST Tier 1 Example Results—Delta Annual or Seasonal Sensible Cooling Loads (10^6 Btu/y) for Las Vegas, NV	B73–I86
B20-5	HERS BESTEST Tier 2 Example Results—Annual or Seasonal Heating Loads (10^6 Btu/y) for Colorado Springs, CO	B88–I97
B20-6	HERS BESTEST Tier 2 Example Results—Delta Annual or Seasonal Heating Loads (10^6 Btu/y) for Colorado Springs, CO	B99–I107
B20-7	HERS BESTEST Tier 2 Example Results—Annual or Seasonal Sensible Cooling Loads (10^6 Btu/y) for Las Vegas, NV ("AL") and Colorado Springs, CO ("AC")	B109–I118
B20-8	HERS BESTEST Tier 2 Example Results—Delta Annual or Seasonal Sensible Cooling Loads (10^6 Btu/y) for Las Vegas, NV ("AL") and Colorado Springs, CO ("AC")	B120–I128

Table B20-2 B20.4 Monthly Results Tables

Table	Title	"Sheet," Cell Range
B20-9	BLAST 3.0 Tier 1 Monthly and Total Heating Loads (million Btu)	"BLAST-HtgRes", B1–Y15
B20-10	BLAST 3.0 Tier 2 Monthly and Total Heating Loads (million Btu)	"BLAST-HtgRes", AA1–AG15
B20-11	BLAST 3.0 Tier 1 Monthly and Total Cooling Sensible Loads (million Btu)	"BLAST-ClgRes", B1–M15
B20-12	BLAST 3.0 Tier 2 Monthly and Total Cooling Sensible Loads (million Btu)	"BLAST-ClgRes", O1–U15
B20-13	DOE-2.1E Tier 1 Monthly and Total Heating Loads (million Btu)	"DOE-HtgRes", B1–Y15
B20-14	DOE-2.1E Tier 2 Monthly and Total Heating Loads (million Btu)	"DOE-HtgRes", AA1–AG15
B20-15	DOE-2.1E Tier 1 Monthly and Total Sensible Cooling Loads (million Btu)	"DOE-ClgRes", B1–M15
B20-16	DOE-2.1E Tier 2 Monthly and Total Sensible Cooling Loads (million Btu)	"DOE-ClgRes", O1–U15
B20-17	SERIRES/SUNCODE 5.7 Tier 1 Monthly and Total Heating Loads (million Btu)	"SRES-HtgRes", B1–Y15
B20-18	SERIRES/SUNCODE 5.7 Tier 2 Monthly and Total Heating Loads (million Btu)	"SRES-HtgRes", AA1–AG15
B20-19	SERIRES/SUNCODE 5.7 Tier 1 Monthly and Total Sensible Cooling Loads (million Btu)	"SRES-ClgRes", B1–M15
B20-20	SERIRES/SUNCODE 5.7 Tier 2 Monthly and Total Sensible Cooling Loads (million Btu)	"SRES-ClgRes", O1–U15

Copyrighted material licensed to Sei Ito on 2020-06-26 for licensee's use only. All rights reserved. No further reproduction or distribution is permitted. Distributed by Techstreet for ASHRAE, www.techstreet.com

Table B20-3 B20.4 Figures

Figure	Title	Sheet Tab
B20-1	HERS BESTEST Tier 1 Example Results—Annual or Seasonal Heating Load (L100AC–L202AC), Colorado Springs, CO	Fig-B20-1_T1_Htg1
B20-2	HERS BESTEST Tier 1 Example Results—Annual or Seasonal Heating Load (L302AB–L324AB), Colorado Springs, CO	Fig-B20-2_T1_Htg2
B20-3	HERS BESTEST Tier 1 Example Results—Delta Annual or Seasonal Heating Load (L110AC–L202AC), Colorado Springs, CO	Fig-B20-3_T1_dHtg1
B20-4	HERS BESTEST Tier 1 Example Results—Delta Annual or Seasonal Heating Load (L302AB–L324AB), Colorado Springs, CO	Fig-B20-4_T1_dHtg2
B20-5	HERS BESTEST Tier 1 Example Results—Annual or Seasonal Sensible Cooling Load (L100AL–L150AL), Las Vegas, NV	Fig-B20-5_T1_Clg1
B20-6	HERS BESTEST Tier 1 Example Results—Annual or Seasonal Sensible Cooling Load (L155AL–L202AL), Las Vegas, NV	Fig-B20-6_T1_Clg2
B20-7	HERS BESTEST Tier 1 Example Results—Delta Annual or Seasonal Sensible Cooling Load (L110AL–L150AL), Las Vegas, NV	Fig-B20-7_T1_dClg1
B20-8	HERS BESTEST Tier 1 Example Results—Delta Annual or Seasonal Sensible Cooling Load (L155AL–L202AL), Las Vegas, NV	Fig-B20-8_T1_dClg2
B20-9	HERS BESTEST Tier 2 Example Results—Annual or Seasonal Heating Load (L165AC–P150AC), Colorado Springs, CO	Fig-B20-9_T2_Htg
B20-10	HERS BESTEST Tier 2 Example Results—Delta Annual or Seasonal Heating Load (L165AC–P150AC), Colorado Springs, CO	Fig-B20-10_T2_dHtg
B20-11	HERS BESTEST Tier 2 Example Results—Annual or Seasonal Sensible Cooling Load (L165AL–P150AC)	Fig-B20-11_T2_Clg
B20-12	HERS BESTEST Tier 2 Example Results—Delta Annual or Seasonal Sensible Cooling Load (L165AC–P150AC)	Fig-B20-12_T2_dClg

Copyrighted material licensed to Sei Ito on 2020-06-26 for licensee's use only.
All rights reserved. No further reproduction or distribution is permitted. Distributed by Techstreet for ASHRAE, www.techstreet.com

(This annex is not part of the standard. It is merely informative and does not contain requirements necessary for conformance to the standard. It has not been processed according to the ANSI requirements for a standard and may contain material that has not been subject to public review or a consensus process. Unresolved objectors on informative material are not offered the right to appeal at ASHRAE or ANSI.)

INFORMATIVE ANNEX B21 PRODUCTION OF EXAMPLE RESULTS FOR SECTION 7 TEST PROCEDURES

The Section 7 example results were produced during 1994 and 1995. The following programs were used to generate the example results:

- BLAST 3.0 Level 215
- DOE2.1E - W54
- SUNCODE 5.7

The following discussion relates to program status in 1995. BLAST was the program the U.S. Department of Defense used for energy efficiency improvements to its buildings [B-12]. DOE2.1E was considered to be the most advanced of the programs sponsored by the U.S. Department of Energy and was the technical basis for setting national building energy codes and standards in the United States [B-40,B-62]. SUNCODE is based on the public domain program SERIRES-1.0 developed by the National Renewable Energy Laboratory [B-11,B-24]. The results for all three programs were developed by National Renewable Energy Laboratory and J. Neymark & Associates. For generating these results, along with using consistent modeling methods, the simulations were conducted using the most detailed modeling methods allowed by the software within the constraints of the test specification.

B21.1 Discussion of Selected Results

B21.1.1 Detailed Ground-Coupling Analysis Results for Cases L302B, L304B, L322B, and L324B. The results for two types of ground coupling models included in Informative Annex B20 effectively widen the range of example results outputs for cases that include ground-coupling analysis. This was done in case a residential modeling program is using a more sophisticated algorithm than the application of ASHRAE steady-state heat transfer coefficients. Case descriptions for the more detailed simulations of ground coupling in Cases L302B, L304B, L322B, and L324B are provided in Informative Annex B18. Some issues regarding simulation of detailed ground coupling with the software used for generating example results are noted below.

In BLAST and DOE2.1E, the mathematical algorithms limit the amount of mass that these programs can effectively model. Where soil thickness (conduction path length) was greater than what a program could handle (generally 2 to 3 ft, depending on the case), an allowable soil amount was provided and the remaining thickness modeled as steady-state resistance.

In running the example results simulations, which are restricted to one-dimensional heat-flow modeling, the following methods were applied to approximate solar incidence on soil adjacent to the house:

- In BLAST, DOE2.1E, and SERIRES/SUNCODE, slab floors were associated with a skyward-facing, horizontal solar-receiving surface, and exterior solar absorptance was reduced from 0.6 to 0.375 to account for shading half of direct beam radiation at any given time. Because BLAST automatically accounts for shading by the building, the horizontal receiving surface was located on the south side of the building to avoid double counting the shading effect.
- In DOE2.1E and SERIRES/SUNCODE, below-grade walls were associated with a skyward-facing, horizontal solar-receiving surface, and exterior solar absorptance was reduced from 0.6 to 0.375 to account for shading half of direct beam radiation at any given time.
- In BLAST, below-grade walls were associated with skyward-facing, horizontal solar-receiving surfaces, exterior solar absorptance was kept at 0.6, and the horizontal receiving surfaces were positioned to be automatically shaded by the building.

B21.1.2 Exterior Surface Coefficient Effects. Part of the spread among the example results can be explained by different assumptions regarding treatment of heat transfer between external surfaces and the surrounding environment. This is especially evident in the Case L200A heating load output. A sensitivity test with SERIRES/SUNCODE, when comparing results using the combined exterior surface coefficients specified in Section 7 versus those calculated by DOE2.1E (DOE2.1E's annualized average was input to SERIRES/SUNCODE), indicates the following annual heating loads for Case L200A:

- SERIRES/SUNCODE with Section 7 exterior surface coefficient: 168 MBtu/y heating
- SERIRES/SUNCODE with DOE2.1E calculated exterior surface coefficient: 151 MBtu/y heating

The roughly 10% effect of this parameter represents a legitimate algorithmic difference between the example results. Future research examining the preferred use of one algorithm over the other is justified by the magnitude of this effect.

Copyrighted material licensed to Sei Ito on 2020-06-26 for licensee's use only. All rights reserved. No further reproduction or distribution is permitted. Distributed by Techstreet for ASHRAE, www.techstreet.com

(This annex is not part of the standard. It is merely informative and does not contain requirements necessary for conformance to the standard. It has not been processed according to the ANSI requirements for a standard and may contain material that has not been subject to public review or a consensus process. Unresolved objectors on informative material are not offered the right to appeal at ASHRAE or ANSI.)

INFORMATIVE ANNEX B22 EXAMPLE PROCEDURES FOR DEVELOPING ACCEPTANCE-RANGE CRITERIA FOR SECTION 7 TEST CASES

This informative annex provides an example procedure for establishing acceptance range criteria to assess annual or seasonal heating and cooling load results from software undergoing tests contained in Standard 140, Section 7. Users are reminded that inclusion of this example is intended to be illustrative only and that it does not imply in any way that results from software tests are required by Standard 140 to be within any specific limits. However, certifying or accrediting agencies using Section 7 of Standard 140 may wish to adopt procedures for developing acceptance-range criteria for tested software. This section presents an example range setting methodology that may be used for this purpose. This method was first proposed and described in *HERS BESTEST*, Volume 1, pp. 138–141 [B-38]. Note also that the example ranges presented in this section are developed using fictitious reference results.

B22.1 Establishing Acceptance Ranges. A certifying or accrediting agency may develop acceptance-range setting criteria to suit particular needs. In choosing algorithms for determining acceptance ranges, it is important to consider the following:

a. Establishing a buffer range around reference results is desirable for the following reasons:
   1. The reference results do not represent truth but rather the state of the art in the simulation and analysis of buildings; therefore, a result just outside the range of reference results should be acceptable.
   2. Where confidence interval ranges are very narrow, it is advisable to have alternative "economic threshold" buffer zone range expansion criteria so that software is not eliminated because of relatively insignificant differences in energy consumption or energy costs.
b. The use of statistical confidence intervals [B-63] provides a theoretical basis for developing acceptance ranges. The 93% confidence level was chosen for the example presented here, because a 95% confidence interval would widen the acceptance range to a point where the test cases lack meaning (are too easy to pass). Similarly, the acceptance range for an 80% confidence interval would be too narrow. We determined empirically that, for most cases, confidence coefficients corresponding to confidence intervals in the range of 80% to 95% yield reasonable acceptance ranges.
c. Where reference results are very close together, such that the confidence interval maximum or minimum values could fall very close to the reference results maximum or minimum values, a value of ±5% of the base case (L100A) mean heating load is applied to the range. For the cases reported here, that value is ±4 million Btu. This value is taken as a reasonable threshold of economic uncertainty. That is, any software disagreements within ±4 million Btu of the reference results extremes for a given case, including difference (or "delta") cases, would result in relatively insignificant utility cost disagreements and therefore should not be cause for eliminating a given software tool, even if it falls outside of confidence limits based on the chosen confidence interval. Depending on fuel prices, climate, mortgage lending policy, and other circumstances in specific regions, it may make sense to adjust this criterion.
d. Some cases may deserve to have more strict acceptance criteria than would be generated using the range setting procedure described above. A possible example would be cases with higher absolute loads or higher load differences. In these cases, where the percentage variance between reference results can be roughly consistent with those for lower-load cases, the higher values may produce an unreasonably large extension of the acceptance range in terms of estimated fuel cost. Acceptance ranges may be narrowed by altering the confidence interval or the 4 million Btu buffer. However, the acceptance range must always include the maximum and minimum values of the reference results.

B22.2 Example of Procedure for Developing Acceptance Ranges. Table B22-1 presents example fictitious results and acceptance range limits that result from the example procedure described here. A step-by-step description of the procedures used to arrive at each element accompanies the table. Values indicated by bold font in Table B22-1 are the resulting acceptance range limit values for the fictitious results set as determined using the example range setting criteria described below.

a. Using Reference Results #1, #2, and #3 from Table B22-1, determine the maximum reference result, the minimum reference result, the sample mean (average) of the reference results, and the sample standard deviation (using $n-1$ method) of the reference results. These quantities are shown in Table B22-1 as "Ref. Max.," "Ref. Min.," "Ref. Mean" and "Ref. StDv.," respectively.
b. Calculate the 93% confidence interval for the population sample mean assuming a Student's t-distribution based on the reference results [B-63]. The extremes (confidence limits) of the 93% confidence interval for the population mean are determined from the following:

$$L_a = X + (t_c)(s)/(N)^{1/2} \quad \text{(B22-1)}$$

$$L_b = X - (t_c)(s)/(N)^{1/2} \quad \text{(B22-2)}$$

where

L_a = maximum confidence limit for the confidence interval

L_b = minimum confidence limit for the confidence interval

Copyrighted material licensed to Sei Ito on 2020-06-26 for licensee's use only. All rights reserved. No further reproduction or distribution is permitted. Distributed by Techstreet for ASHRAE, www.techstreet.com

Table B22-1 Example Range Criteria Using Fictitious Reference Results

Description	Case #1, 10^6 Btu	Case #2, 10^6 Btu	Delta Case #1 – Case #2, 10^6 Btu
Reference Result #1	73.00	46.00	27.00
Reference Result #2	70.00	45.00	25.00
Reference Result #3	82.00	50.00	32.00
Ref. Max.	82.00	50.00	32.00
Ref. Min.	70.00	45.00	25.00
Ref. Mean	75.00	47.00	28.00
Ref. StDv.	6.24	2.65	3.61
Ref. 93% Conf. Max.	**87.89**	52.46	35.44
Ref. 93% Conf. Min.	**62.11**	41.54	**20.56**
Ref. Max. + 4 million Btu (4.220 GJ)*	86.00	**54.00**	**36.00**
Ref. Min. – 4 million Btu (4.220 GJ)	66.00	**41.00**	21.00
Example Range Max.	**87.89**	**54.00**	**36.00**
Example Range Min.	**62.11**	**41.00**	**20.56**

* Note 4 million Btu = 4.220 GJ = 1.172 MWh.

Table B22-2 Sample Student's t-Confidence Coefficients t_c

Sample Size (n)	Desired Confidence Interval		
	80%	90%	95%
2	3.078	6.314	12.706
3	1.886	2.920	4.303
4	1.638	2.353	3.182
5	1.533	2.132	2.776
6	1.476	2.015	2.571
7	1.440	1.943	2.447
8	1.415	1.895	2.363

X = sample mean

t_c = confidence coefficient (see below)

s = sample standard deviation = SQRT {SUM[$(x_j - \text{AVG}(x_j))^2$]/($N$ – 1)} for j = 1 to N, where x is a given value for the j-th sample

N = number of samples

The confidence coefficient t_c is determined by the sample size and the desired confidence interval. For this example, with a sample size of three (N = 3), t_c is calculated from Equation B22-1 or B22-2 to match the original *HERS BESTEST* (Appendix H) [B-38] confidence limits, resulting in the following:

$$t_c = 3.576255 \text{ [from } t_c = 2.92 \times (3)^{1/2}/(2)^{1/2}] \qquad \text{(B22-3)}$$

For t_c = 3.576255, 2 degrees of freedom (number of samples = 3), and 2 tails, Excel's TDIST() function (which applies a Student's t-distribution) returns a probability of 0.07007, which corresponds to a 93% (92.993%) confidence interval. Equations B22-1 and B22-2 then become as follows:

$$L_a = X + 3.576(s)/(3)^{1/2} \qquad \text{(B22-4)}$$

$$L_b = X - 3.576(s)/(3)^{1/2} \qquad \text{(B22-5)}$$

The resulting confidence limits are shown in Table B22-1 as "Ref. 93% Conf. Max." and "Ref. 93% Conf. Min."

Table B22-2 provides a limited set of student's t-confidence coefficients that may be used for other sample sizes and confidence intervals. Additional tables for

Copyrighted material licensed to Sei Ito on 2020-06-26 for licensee's use only. All rights reserved. No further reproduction or distribution is permitted. Distributed by Techstreet for ASHRAE, www.techstreet.com

other confidence limits and sample sizes are available in many statistics text books.

c. Calculate:

(Ref. Max.) + 4 million Btu (4.220 GJ)

and

(Ref. Min.) – 4 million Btu (4.220 GJ)

The results of these calculations are shown in Table B22-1 as "Ref. Max. + 4 million Btu (4.220 GJ)" and "Ref. Min. – 4 million Btu (4.220 GJ)."

d. The example acceptance range ("Example Range Max.," "Example Range Min.") is then determined by taking the maximum of "Ref. 93% Conf. Max." and "Ref. Max. + 4 million Btu (4.220 GJ)" as "Example Range Max." and the minimum of "Ref. 93% Conf. Min." and "Ref. Min. – 4 million Btu (4.220 GJ)" as "Example Range Min." Using Table B22-1, a software tool passes a case if its test result falls within the "Example Range Max." and "Example Range Min." for that case. In Table B22-1, fictitious sets of results are used such that the confidence interval range setting and the "Ref. Max. + 4 million Btu (4.220 GJ)" and "Ref. Min. – 4 million Btu (4.220 GJ)" ranges set the range extremes for Case #1 and Case #2, respectively. It is also possible to have results where one range setting method sets one extreme and the other range setting method sets the other extreme, as shown in the "Delta Case #1 – Case #2" result of Table B22-1.

For this example, a software tool would pass a particular test case if its result for that test case falls within the acceptance range represented by "Example Range Max." and "Example Range Min." in Table B22-1. Similarly, a software tool would pass a test suite if its results for *all* test cases in a given test suite fall within all acceptance ranges, including for both the absolute cases and the difference (or "delta") cases.

This type of example procedure for developing acceptance ranges was first developed for use with *HERS BESTEST* [B-38]. An example of applying this procedure to the *HERS BESTEST* reference results is included in *HERS BESTEST, Volume 2,* Section 4 [B-39].

B22.3 Procedure for Developing Example Acceptance Ranges for HERS Programs that Designate Heating and Cooling Seasons. The same procedure described above may be applied to developing acceptance ranges for software programs that designate heating and cooling seasons. In this case, the annual reference results must be replaced by seasonal reference results developed from the monthly output corresponding to the designated heating and cooling seasons of the software tool undergoing the tests. For comparing modeling tools that designate heating or cooling seasons, or both, as beginning/ending during midmonth, linearly interpolate the monthly reference results for given months as appropriate. The remainder of the range development procedure is the same.

Copyrighted material licensed to Sei Ito on 2020-06-26 for licensee's use only.
All rights reserved. No further reproduction or distribution is permitted. Distributed by Techstreet for ASHRAE, www.techstreet.com

(This annex is not part of the standard. It is merely informative and does not contain requirements necessary for conformance to the standard. It has not been processed according to the ANSI requirements for a standard and may contain material that has not been subject to public review or a consensus process. Unresolved objectors on informative material are not offered the right to appeal at ASHRAE or ANSI.)

INFORMATIVE ANNEX B23 VALIDATION METHODOLOGIES AND OTHER RESEARCH RELEVANT TO STANDARD 140

B23.1 Model Validation and Testing. ANSI/ASHRAE Standard 140 was developed to identify and diagnose differences in predictions by whole-building energy simulation programs that may be caused by algorithmic differences, modeling limitations, faulty coding, inadequate documentation, or input errors. The methodological structure of Standard 140 allows all elements of a complete validation approach to be added as they become available.

Table B23-1 shows the structure and the test suites in Standard 140. The table is an abbreviated way of representing the parameter space in which building energy simulation programs operate. Each cell in the matrix represents a large region in the space, so listing a test suite in a cell does not obviate the need for additional test suites in that cell, and tests are needed in the empty cells. Class I tests in Section 5 of the standard are based on procedures developed by the National Renewable Energy Laboratory (NREL) and field tested by the International Energy Agency (IEA) over three IEA research tasks [B-14,B-16,B-17,B-29]. Another Section 5 test suite, which follows NREL's methodology, was developed by Natural Resources Canada [B-58]. Additionally, one test suite was based on ASHRAE research [B-64] and adapted by NREL in collaboration with ASHRAE Standing Standard Project Committee (SSPC) 140 [B-6]. Class II tests (Section 7 of the standard) are based on procedures developed by NREL and field tested by the Home Energy Rating Systems (HERS) Council Technical Committee [B-38]. Additional tests not yet in Standard 140 were developed under ASHRAE research projects [B-13,B-100], under joint IEA Solar Heating and Cooling Programme/Energy Conservation in Buildings and Community Systems Task 34/ Annex 43 [B-65], and elsewhere (see Section B23.2); these may further populate the validation test matrix in the future.

Standard 140 is cited by a number of codes, standards, and regulatory bodies, including ASHRAE Standard 90.1 [B-103], the DOE Qualified Software List under IRS 179D energy tax credit regulations for commercial buildings [B-104], the RESNET Home Energy Rating System software approval process [B-105], the International Energy Conservation Code [B-106], the International Green Construction Code® [B-107], and ASHRAE Standard 189.1 [B-108].

B23.1.1 Methodological Basis. There are three ways to evaluate a whole-building energy simulation program's accuracy [B-65,B-66,B-67,B-101]:

a. *Empirical validation*, which compares calculated results from a program, subroutine, algorithm, module, or software object to monitored data from a real building, test cell, or laboratory experiment.
b. *Analytical verification*, which compares the output from a program, subroutine, algorithm, module, or software object to results from a known analytical solution or to results from a set of closely agreeing quasi-analytical solutions or verified numerical models.
c. *Comparative testing*, which compares a program to itself or to other programs.

Table B23-2 compares these techniques [B-65,B-66,B-67,B-68,B-101]. In this table, the term "model" is the representation of reality for a given physical behavior. For example, heat transfer may be simulated with one-, two-, or three-dimensional conduction models. The term "solution process" encompasses the mathematics and computer coding to solve a given model. The solution process for a model can be perfect, while the model remains inappropriate for a given physical situation, such as using a one-dimensional conduction model where two-dimensional conduction dominates. The term "truth standard" represents the standard of accuracy for predicting real behavior. An analytical solution is a "mathematical truth standard," and only tests the solution process for a model, not the appropriateness of the model. An approximate truth standard from an experiment tests both the solution process and appropriateness of the model within experimental uncertainty. The ultimate (or "absolute") validation truth standard would be comparison of simulation results to a perfectly performed empirical experiment, with all simulation inputs perfectly defined.

B23.1.1.1 Empirical Validation. Establishing an absolute truth standard for evaluating a program's ability to analyze physical behavior requires empirical validation, but this is only possible within the range of measurement uncertainty, including that related to instruments, spatial and temporal discretization, and the overall experimental design. Full-scale test cells and buildings are large, relatively complex experimental objects. The exact design details, material properties, and construction in the field cannot be perfectly known, so there is some uncertainty about the simulation model inputs that accurately represent the experimental object. Meticulous care is required to describe the experimental apparatus as clearly as possible to modelers to minimize this uncertainty. This includes experimental determination of as many material properties and other simulation model inputs as possible, including overall building parameters such as overall steady-state heat transmission coefficient (UA_o), infiltration (in the form of an effective UA_{inf}), and thermal capacitance [B-90,B-109,B-110]. Measuring these overall parameters allows for a closure check on the individual parameters that comprise the overall parameters—for example, building envelope material properties or individual steady-state envelope component conductances that sum up to the overall steady-state heat transmission coefficient. Also required are detailed on-site meteorological measurements. For example, many experiments measure global horizontal solar radiation, but very few experiments measure the splits between direct, diffuse, and ground-reflected radiation, all of which are inputs to many whole-building energy simulation programs. Small-scale test cells also have shortcomings because of similitude factors for air convection and the

Copyrighted material licensed to Sei Ito on 2020-06-26 for licensee's use only. All rights reserved. No further reproduction or distribution is permitted. Distributed by Techstreet for ASHRAE, www.techstreet.com

Table B23-1 ANSI/ASHRAE Standard 140 Validation Test Matrix [B-65,B-101]

Test Type/Model Type	Building Thermal Fabric (Basic Building Physics)[a]	Mechanical Equipment and On-Site Energy Generation Equipment [a]
Analytical Verification	• Ground Coupled Heat Transfer BESTEST for Slab On Grade (5.2.4) [B-14]	• HVAC BESTEST Volume 1 (5.3) [B-16] • Gas Forced Air Furnace BESTEST (5.4.1, 5.4.2) [B-58] • Airside HVAC BESTEST Volume 1 [B-6]
Comparative Tests	• Thermal Fabric BESTEST (5.2.1, 5.2.2, 5.2.3) [B-29] • Residential Building BESTEST (7.2) [B-38]	• HVAC BESTEST Volume 2 (5.3) [B-17] • Gas Forced Air Furnace BESTEST (5.4.3) [B-58]
Empirical Validation	—	—

a Sections of Standard 140 relevant to a given test suite are indicated in parenthesis [e.g., "(5.2.4)" indicates Section 5.2.4].

Table B23-2 Advantages and Disadvantages of Various Validation Techniques [B-65,B-66,B-101]

Technique	Advantages	Disadvantages

Empirical Validation (test of model and solution process)	• Approximate truth standard within experimental accuracy
	• Any level of complexity
		• Experimental uncertainties:
		  • Instrument calibration, spatial/temporal discretization
		  • Instrumentation can alter the effect being measured
		  • Imperfect knowledge/specification of the experimental object (building) being simulated
		• High-quality, detailed measurements are expensive and time consuming
		• Dignoses can be difficult
		• Requires emperical determination of inputs
		• Only a limited number of test conditions are practical
		• Only a limited number of sensitivity test cases are practical

Analytical Verification (test of solution process)	• No input uncertainty • Exact mathematical or secondary mathematical truth standard for given model • Inexpensive	• No test of model validity or suitability • Limited to highly constrained cases for which analytical or quasi-analytical solutions can be developed [a]
Comparative Testing (relative test of model and solution process)	• No input uncertainty • Any level of complexity • Many diagnostic comparisons possible • Inexpensive and quick	• No absolute truth standard (only statistically based acceptance ranges are possible)

a. Use of verified numerical solutions can extend the analytical verification approach to more realistic cases [B-14].

increased relative proportion of corner conditions, which increases the importance of 2D and 3D heat transfer. Side-by-side experimental design can help to dampen the effects of input uncertainties if the effects of the intentional differences between test objects are robust as compared to those of the unintentional differences.

The National Renewable Energy Laboratory (NREL) divides empirical validation into different levels, because many past validation studies produced inconclusive results. The levels of validation depend on the degree of control over possible sources of error in a simulation. The higher the degree of control over error sources, the better the potential is for diagnosing the causes of measured-to-modeled output differences. The error sources consist of seven types, divided into two groups as described in Sections B23.1.1.1.1 and B23.1.1.1.2 [B-67,B-101].

B23.1.1.1.1 External Error Types

- Differences between actual building microclimate versus weather input used by the program
- Differences between actual schedules, control strategies, effects of occupant behavior, and other effects from the real building versus those assumed by the program user
- User error deriving building input files
- Differences between actual physical properties of the building (including HVAC systems) versus those input by the user

B23.1.1.1.2 Internal Error Types

- Differences between actual thermal transfer mechanisms in the real building and its HVAC systems versus the simplified model of those processes in the simulation (All

Copyrighted material licensed to Sei Ito on 2020-06-26 for licensee's use only. All rights reserved. No further reproduction or distribution is permitted. Distributed by Techstreet for ASHRAE, www.techstreet.com

models, no matter how detailed, are simplifications of reality.)

- Errors or inaccuracies in the mathematical solution of the models
- Coding errors
- Ambiguous, incomplete, or faulty documentation

The simplest level of empirical validation compares a building's actual long-term energy use to that calculated by a computer program, with no attempt to eliminate sources of discrepancy. Because this is similar to how a simulation tool is used in practice, it is favored by many in the building industry. However, it is difficult to interpret the results because all possible error sources are acting simultaneously. Even if there is good agreement between measured and calculated performance, possible offsetting errors prevent a definitive conclusion about the model's accuracy. More informative levels of validation involve controlling or eliminating various combinations of error types and increasing the information density of output-to-data comparisons (e.g., comparing temperature and energy results at time scales ranging from subhourly to annual). At the most detailed level, all known sources of error are controlled to identify and quantify unknown error sources and to reveal causal relationships associated with error sources, thereby facilitating diagnostics. Long-term (ideally annual) overall energy use needed to maintain comfort has extra meaning as a metric, because it is an indicator of how important a fault or simplification in a simulation program is in the context of one of the model's most important uses. A $15/yr error out of a $1500/yr energy bill is tolerable, but a $500/yr error is not. Other measurements, such as fluxes through individual surfaces, or short-term temperatures, are important to establish cause and effect but are inherently less indicative by themselves of the overall importance of an error. For example, it is difficult to assess the importance of a 0.5°F absolute average hourly one-week error between simulated and measured zone temperature.

These principles also apply to intermodel comparative testing and analytical verification. The more realistic the test case, the more difficult it is to establish causality and diagnose problems; the simpler and more controlled the test case, the easier it is to pinpoint sources of error or inaccuracy. Methodically building up from simple, highly controlled cases to realistic cases, one parameter at a time, is useful for understanding the impact of assumptions and simplifications in building energy simulation programs.

B23.1.1.2 Analytical Verification. Analytical verification compares outputs from a program, subroutine, algorithm, or software object to results from a known analytical solution or to results from a set of closely agreeing quasi-analytical solutions or verified numerical models. Here the term "analytical solution" is the closed-form mathematical solution of a model that has an exact result for a given set of parameters and simplifying assumptions. The term "quasi-analytical solution" is the mathematical solution of a model for a given set of parameters and simplifying assumptions, which may require minor interpretation differences that cause minor results variations. Such a result may be computed by generally accepted numerical methods or other means, provided that such calculations occur outside the environment of a whole-building energy simulation program and can be scrutinized. The term "verified numerical model" is a numerical model with solution accuracy verified by close agreement with an analytical solution and/or other quasi-analytical or numerical solutions, according to a process that demonstrates convergence in the space and time domains. Such numerical models may be verified by applying an initial comparison with an analytical solution or solutions, followed by comparisons with other numerical models for incrementally more realistic cases where analytical solutions are not available.

B23.1.1.2.1 Mathematical Truth Standards. An analytical solution provides an exact *mathematical truth standard* limited to highly constrained cases for which exact analytical solutions can be derived. A *secondary mathematical truth standard* can be established based on the range of disagreement of a set of closely agreeing verified numerical models or other quasi-analytical solutions. Once verified against all available classical analytical solutions, and compared with each other for a number of other diagnostic test cases that do not have exact analytical solutions, the secondary mathematical truth standard can be used to test other models as implemented within whole-building simulation programs. Although a closed-form analytical solution provides the best possible mathematical truth standard, a secondary mathematical truth standard greatly enhances diagnostic capability for identifying software bugs and modeling errors as compared to the purely comparative method. This is because the range of disagreement among the results that comprise the secondary truth standard is typically much narrower than the range of disagreement among whole-building simulations. The secondary mathematical truth standard also allows more realistic (less constrained) boundary conditions to be used in the test cases, extending the analytical verification method beyond the constraints inherent for classical analytical solutions. This extends the usefulness of analytical verification methods by applying comparative techniques methodically, as outlined below.

B23.1.1.2.2 Establishing Secondary Mathematical Truth Standards. The following methodology for verifying numerical models to develop a secondary mathematical truth standard facilitates extension of analytical verification techniques. The methodology applies to both development of test cases and implementation of the numerical models. The logic for developing test cases may be summarized as follows:

- Identify or develop exact analytical solutions that may be used as mathematical truth standards for testing detailed numerical models using parameters and simplifying assumptions of the analytical solution.
- Apply a numerical solution process that demonstrates convergence in the space and time domains for both the analytical solution test cases and additional test cases where numerical models are applied.
- Once validated against the analytical solutions, use the numerical models to develop test cases that progress toward more realistic (less idealized) conditions but do not have exact analytical solutions.

Copyrighted material licensed to Sei Ito on 2020-06-26 for licensee's use only. All rights reserved. No further reproduction or distribution is permitted. Distributed by Techstreet for ASHRAE, www.techstreet.com

Table B23-3 Types of Extrapolation[B-65,B-66,B-101]

Obtainable Data Points	Extrapolation
A few climates	Many climates
Short-term total energy use	Long-term total energy use or vice versa
Short-term (hourly) temperatures and/or fluxes	Long-term total energy use or vice versa
A few equipment performance points	Many equipment performance points
A few buildings representing a few sets of variable and parameter combinations	Many buildings representing many sets of variable and parameter combinations, or vice versa [a]
Small-scale: simple test cells, buildings, and mechanical systems; laboratory experiments	Large-scale complex buildings with complex HVAC systems or vice versa

a. Extrapolation can go both ways (e.g., from short- to long-term data and from long- to short-term data). This does not mean that such extrapolations are correct, only that researchers and practitioners have explicitly or implicitly made such inferences in the past.

- Check the numerical models by rigorously comparing their results to each other while developing the more realistic cases.
- Tight agreement for the numerical models versus the analytical solution—and versus each other for subsequent test cases—verifies them as a secondary mathematical truth standard based on the range of disagreement among them.
- Use the verified numerical-model results as reference results for testing other models of the given behavior, which reside within whole-building energy simulation computer programs.

Example applications of establishing secondary mathematical truth standards are provided elsewhere [B-6,B-14,B-84,B-111].

B23.1.1.3 Other Considerations. The following general guidelines are helpful when developing effective empirical validation, analytical verification, and comparative test cases:

- Make test cases as simple as possible to minimize input errors.
- Make test cases as robust as possible to maximize signal-to-noise ratio for a tested feature.
- Vary test cases incrementally—varying just a single parameter when possible—so disagreements among results can be quickly diagnosed.
- For numerical models, check sensitivity to spatial and temporal discretization, length of simulation, convergence tolerance, iteration limits, etc., and demonstrate that modeling is at a level of detail where including further detail yields negligible sensitivity in the results; document such work in detailed modeler reports.
- Use independently developed and implemented models, and revise the test specification as needed to accommodate various modeling approaches; this reduces bias by ensuring that the test specification clearly addresses different modeling approaches.
- For resolving disagreements among results that comprise a secondary truth standard, it is helpful to utilize an additional independent expert party not directly involved in developing the models or results being compared.
- Corrections to models must have a clear mathematical or physical basis and must be consistently applied across all test cases. Arbitrary alteration of a model solely for the purpose of better matching a given data set is not allowed.
- A greater number of results from independently developed quasi-analytical solutions or verified numerical models may be helpful for diagnosing disagreements among them.

B23.1.1.4 Combining Empirical, Analytical, and Comparative Techniques. A comparison between measured and calculated performance represents a small region in an immense *N*-dimensional parameter space. Investigators are constrained to exploring relatively few regions in this space yet would like to ensure that the results are not coincidental (e.g., not a result of offsetting errors) and represent the validity of the simulation elsewhere in the parameter space. Analytical and comparative techniques minimize the uncertainty of extrapolations around the limited number of sampled empirical domains. Table B23-3 classifies these extrapolations.

Figure B23-1 shows one process to combine analytical, empirical, and comparative techniques. These three techniques may also be used together in other ways; for example, intermodel comparisons may be done before an empirical validation exercise to better define the experiment and to help estimate experimental uncertainty by propagating all known error sources through one or more whole-building energy simulation programs [B-69,B-70].

For the path shown in Figure B23-1, the first step is running the code against analytical verification test cases to check its mathematical solution. Discrepancies must be corrected before proceeding further.

Second, the code is run against high-quality empirical validation data, and errors are corrected. Diagnosing error sources can be quite difficult. Comparative techniques can be used to create diagnostic procedures [B-13,B-16,B-17,B-29,B-38,B-58,B-64,B-67,B-68, B-71, B-72,B-73] and better define the empirical experiments.

The third step is to check agreement of several different programs with different thermal solution and modeling approaches (that have passed through steps 1 and 2) in a variety of representative cases. This uses the comparative technique as an extrapolation tool. Deviations in the program predictions indicate areas for further investigation.

Copyrighted material licensed to Sei Ito on 2020-06-26 for licensee's use only. All rights reserved. No further reproduction or distribution is permitted. Distributed by Techstreet for ASHRAE, www.techstreet.com

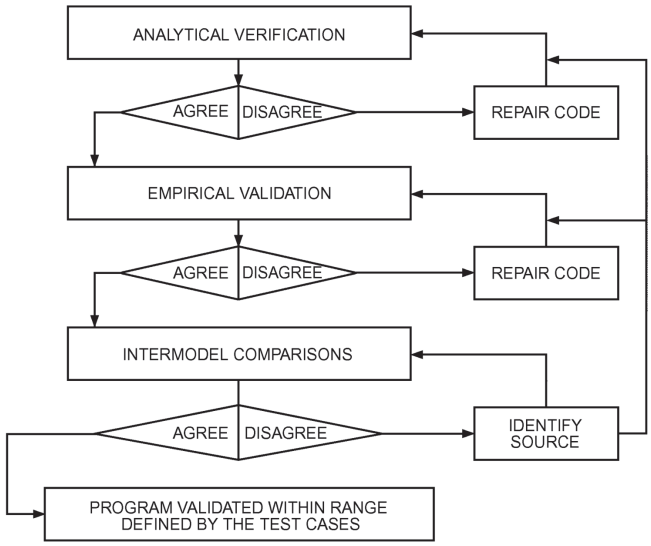

Figure B23-1 Validation method [B-66,B-67,B-68,B-101].

When programs successfully complete these three stages, they are considered validated for cases where acceptable agreement was achieved (i.e., for the range of building, climate, and mechanical system types represented by the test cases). Once several detailed simulation programs have satisfactorily completed the procedure, other programs and simplified design tools can be tested against them. A validated code does not necessarily represent truth. It does represent a set of algorithms that have been shown, through a repeatable procedure, to perform according to the current state of the art. Similarly, the example results and associated computer programs in the nonnormative sections of Standard 140 do not represent truth but rather an attempt to identify the range of uncertainty in the current state of the art via a well-defined and repeatable procedure. It is anticipated that, as building energy simulation programs improve, the informative example results in Standard 140 will be periodically updated, and the range of differences among test case results may be reduced.

The NREL methodology for validating building energy simulation programs has been generally accepted by the International Energy Agency [B-74], ASHRAE Standard 140, ASHRAE/IES Standard 90.1, and elsewhere, with refinements suggested by other researchers [B-74,B-75,B-76,B-77,B-78,B-79,B-80,B-81]. Additionally, the Commission of European Communities has conducted considerable work under the PASSYS program [B-82,B-83].

B23.1.2 Summary of Previous Testing And Validation Work. Other work summarizes approximately 100 articles and research papers on analytical, empirical, and comparative testing from 1980 through mid-2001 [B-16,B-101].

B23.2 Other Relevant Research. A number of other simulation test suites in various stages of completion could eventually be included in Standard 140. These include the following, among others:

a. Update of Standard 140 building thermal fabric tests of Sections 5.2.1, 5.2.2, and 5.2.3 [B-102]
b. IEA BESTEST multizone nonairflow in-depth diagnostic cases [B-85,B-86]
c. U.S. Department of Energy emperical validation tests
d. Building energy simulation test for existing homes (BESTEST-EX), Phase 1 test procedure: Building thermal fabric cases [B-87,B-88]
e. RESNET mechanical equipment tests [B-89]
f. ASHRAE RP-1052, "Development of an Analytical Verification Test Suite for Whole Building Energy Simulation Programs—Building Fabric" [B-13]
g. RADTEST radiant heating and cooling test cases [B-71]
h. Proposed IEA SHC Task 22 BESTEST residential ground-coupled cases
i. ETNA BESTEST empirical validation test specification [B-90]
j. "Daylighting—HVAC Interaction Tests for the Empirical Validation of Building Energy Analysis Tools" [B-91]
k. "Economizer Control Tests for the Empirical Validation of Building Energy Analysis Tools" [B-92]
l. BESTEST airflow cases
m. "Empirical Validations of Shading/Daylighting/Load Interactions in Building Energy Simulation Tools" [B-93]
n. Chilled-water and hot-water mechanical equipment and control comparative and empirical validation tests [B-94]
o. Double-skin façade comparative and empirical validation tests [B-95]

Note: Because items "c," "h," and "l" are works in progress, no references can yet be cited for them.

B23.2.1 Update of Standard 140 Building Thermal Fabric Tests of Sections 5.2.1, 5.2.2 and 5.2.3 [B-102]. Originally published in 1995 by National Renewable Energy Laboratory (NREL) in collaboration with the International Energy Agency (IEA), IEA BESTEST is the founding procedure for ASHRAE Standard 140—comprising the basis of Sections 5.2.1, 5.2.2, and 5.2.3—and has been applied worldwide by the building energy modeling industry. In response to the evolution of the state of the art in building thermal fabric modeling since the IEA BESTEST test cases and example simulation results were developed, work is in progress to update Sections 5.2.1, 5.2.2, and 5.2.3 of Standard 140. This includes the normative test specification and the informative example results. The revision addresses relevant advancements in the state of the art of building energy modeling, including updates to specified weather data, default surface heat transfer coefficients, window specifications, and other features. Additional excursion cases have been developed to test the ability to model advanced windows, single-pane windows, increased insulation, and the effect of directly applying constant surface heat transfer coefficients. Test suite improvements adhere to the original kernel of fundamental diagnostic capability, as this functionality has facilitated isolation of many software errors over the years. This implies integrating revisions and constraining the work to maintain as much of the original parsimonious framework as possible for the base case and parametric sensitivity tests.

B23.2.2 IEA BESTEST Multizone Nonairflow In-Depth Diagnostic Cases [B-85,B-86]. Developed by NREL in conjunction with IEA SHC Task 34/ECBCS Annex 43, these test

Copyrighted material licensed to Sei Ito on 2020-06-26 for licensee's use only. All rights reserved. No further reproduction or distribution is permitted. Distributed by Techstreet for ASHRAE, www.techstreet.com

cases include an analytical verification case that tests a model's ability to correctly keep account of interzonal conduction heat transfer, three comparative cases for testing the ability of programs to account for multizone shading by a single shading object and self-shading of the building by zones that shade other zones, and a comparative case to test the ability to model internal windows between zones. Shading and internal window test cases employ idealized glazing and building zones designed as calorimeters for testing shading and solar gains effects.

B23.2.3 Empirical Validation. The U.S. Department of Energy (DOE) is supporting efforts to develop empirical validation test suites for inclusion in Standard 140. Projects underway include the small commercial building prototype at Oak Ridge National Laboratory's Flexible Research Platform (FRP), a zone in Lawrence Berkeley National Laboratory's FLEXLAB, and performance mapping of several high-efficiency commercial rooftop unitary air-conditioning systems in cooling mode at the NREL Flow-Through Test Loop. Additionally, Argonne National Laboratory is working on the theory and application of uncertainty in empirical validation exercises [B-112]. ASHRAE Standing Standard Project Committee (SSPC) 140 is tracking this work closely and will integrate these empirical validation test suites into Standard 140 if the uncertainty analysis indicates the tests are meaningful.

B23.2.4 BESTEST-EX [B-87,B-88]. Developed by NREL in collaboration with a housing-retrofit industry working group, BESTEST-EX is based on the current *HERS BESTEST* [B-38] cases of Section 7.2. However, BESTEST-EX is specifically designed to test programs that model energy efficiency improvements to existing residential construction. As such, the BESTEST-EX cases include modifications to HERS BESTEST inputs to be more appropriate for poorly insulated older buildings (e.g., updated default convective surface coefficients) and includes the capability to test more detailed weather-driven infiltration models. BESTEST-EX also includes a new methodology for testing the ability to apply calibration of models to existing home utility billing data to estimate retrofit energy savings. The procedure tests the ability to model the following retrofit cases: infiltration air sealing, attic insulation, wall insulation, programmable thermostat, low-emissivity windows, low exterior solar-absorptance roof (cool roof), and external solar shading.

B23.2.5 RESNET Mechanical Equipment Tests [B-89]. Published by the Residential Energy Services Network (RESNET), these test cases are designed for testing more simplified building energy analysis tools commonly used for residential modeling. The procedures test the ability to model space-heating equipment, space-cooling equipment, duct distribution system efficiency, and domestic hot-water system performance. The space-heating and cooling equipment tests verify the ability to model furnaces, air conditioners, and air-source heat pumps. The duct distribution system efficiency tests utilize results from ASHRAE Standard 152 [B-96].

B23.2.6 ASHRAE RP-1052 [B-13]. Developed by Oklahoma State University as an ASHRAE research project, these tests are analytical verification tests that focus on the ability to model thermal physics related to the building fabric. Cases allow the comparison of analytical solutions to program results for the purpose of testing the ability of programs to model steady-state convection and conduction, exterior and interior infrared radiation, exterior solar radiation, transient conduction, infiltration, convective and radiant internal gains, ground coupling, solar transmission through windows, internal (transmitted) solar radiation distribution, and external shading.

B23.2.7 RADTEST [B-71]. This is a comparative test developed by Hochschule fur Technik + Architektur Luzern in conjunction with the IEA Solar Heating and Cooling Task 22. Cases allow the comparison of program results to each other for the purpose of testing the ability of programs to model radiant heating or cooling hydronic loop systems embedded in the building shell (e.g., floor, ceiling, etc.).

B23.2.8 Proposed IEA SHC Task 22 BESTEST Residential Ground-Coupled Cases. This is a pilot set of realistic comparative test cases developed by the National Renewable Energy Laboratory (NREL) in conjunction with the IEA Solar Heating and Cooling (SHC) Programme Task 22. These cases focus on the ability to model ground-coupled heat transfer and could directly append the building fabric cases of Section 5.2. Cases allow the comparison of program results to each other for the purpose of testing the ability of programs to model interaction of the building with the atmosphere through the ground; effects of solar radiation on ground-coupled surfaces; effects of calculated film coefficients versus constant film coefficients; slab-on-grade geometries with and without insulation; basement geometries with and without insulation; interaction of the building with the deep ground conditions, including heat sinks such as water tables; and walkout basement construction. As a result of substantial undiagnosable disagreements among detailed model results for these test cases, NREL developed the in-depth analytical verification ground heat transfer cases of Section 5.2.4. NREL plans to continue work on the pilot cases and other more realistic ground-coupled heat transfer cases.

B23.2.9 ETNA BESTEST [B-90]. ETNA BESTEST is an empirical validation test developed by Electricité de France in conjunction with J. Neymark & Associates and the National Renewable Energy Laboratory. Cases allow the comparison of empirical data to program results, allowing for validation of models within the uncertainty of the experiments. Test cases focus on the ability to model thermal loads associated with the building fabric in artificial and natural climatic configurations. Parametric variations in a natural climate configuration include dynamic thermal diffusion (with windows insulated and covered), solar gains (windows uncovered), thermostat setback, variation of interior surface convective coefficient (by varying mixing fan flow rate), variation of heater type, variation of thermal mass (insulation over the floor slab), and interactions of these. Parametric variations in an artificial climate configuration include tests for the ability to model outdoor air ventilation/infiltration, internal gains, and typical wall-mounted "convective" and "radiant" heaters versus a heater designed for ideal pure convective output with uniform mixing of zone air (commonly assumed by simulations). Data were gathered in the artificial climate configuration to empirically characterize steady-state overall building heat loss coefficient; steady-state

Copyrighted material licensed to Sei Ito on 2020-06-26 for licensee's use only. All rights reserved. No further reproduction or distribution is permitted. Distributed by Techstreet for ASHRAE, www.techstreet.com

thermal conductance of individual walls, floor, ceiling, and windows; and internal thermal capacitance. Measurements were also made with the objectives of estimating interior convective surface coefficients and empirically characterizing incidence-angle-dependent window optical transmittance.

B23.2.10 Daylighting—HVAC Interaction Tests for the Empirical Validation of Building Energy Analysis Tools [B-91]. Developed by Iowa State University and Iowa Energy Resource Station in conjunction with IEA SHC Task 22, test cases allow the comparison of empirical data to program results, allowing for validation of models within the uncertainty of the experiments. The tests focus on the ability to model daylighting/HVAC interaction. Identical rooms connected to separate mechanical systems are used, with the difference that one room has dimmable ballasts. Interior illuminance, solar irradiance, and heating loads were measured in both rooms.

B23.2.11 Economizer Control Tests for the Empirical Validation of Building Energy Analysis Tools [B-92]. Developed by Iowa State University and Iowa Energy Resource Station in conjunction with IEA SHC Task 22, cases allow the comparison of empirical data to program results, allowing for validation of models within the uncertainty of the experiments. The test cases focus on the ability to model economizer control and outdoor air in variable-air-volume systems. Parametric variations of economizer control tests include outdoor air versus return air temperature comparison, with parametric variations for 0% and 20% minimum outdoor air, and outdoor air versus return air enthalpy comparison with 0% minimum outdoor air.

B23.2.12 BESTEST Airflow Cases. Developed by a group led by Institutes of National Colleges of Technology, Japan, in conjunction with IEA SHC Task 34/ECBCS Annex 43, airflow cases emphasize natural ventilation (buoyancy, wind, and temperature-difference driven airflows) and mechanical-fan driven flows. Cases have been developed in one-zone and three-zone configurations, and many of the test cases include analytical solutions. As of this writing, the final project report has not yet been completed.

B23.2.13 Empirical Validations of Shading/Daylighting/Load Interactions in Building Energy Simulation Tools [B-93]. Developed by the Swiss Federal Laboratories for Materials Testing and Research (EMPA), Iowa State University, and Iowa Energy Resource Station (ERS), in conjunction with IEA SHC Task 34/ECBCS Annex 43, this suite includes eight empirical validation experiments conducted at EMPA that test the ability to model (a) overall test cell conductance, (b) overall test cell internal capacitance, (c) glazing only, (d) glazing with external textile shading screen, (e) glazing with internal textile shading screen, (f) glazing with external venetian blinds, (g) glazing with internal miniblinds, and (h) a complete window, i.e., glazing with a frame. Additional work done at ERS created an empirical validation data set for daylighting controls, using dimmable ballasts, fabric shades, miniblinds, exterior shading fins, and equipment for scheduled internal gains.

B23.2.14 Chilled-Water and Hot-Water Mechanical Equipment and Control Comparative and Empirical Validation Tests [B-94]. Developed by Dresden University of Technology in conjunction with IEA SHC Task 34/ECBCS Annex 43, this work tests the ability to model chilled- and hot-water mechanical systems used for space conditioning. The tests focus on single-component models, including chiller, boiler, cooling coil (dry/wet regime with condensing water flow rate measurement), heat exchanger (terminal reheat), and hydronic network (pipes, pump, valve). Empirical data for both the hot-water and the chilled-water systems were obtained from several experiments conducted at the Iowa Energy Resource Station (ERS) for a chilled-water system, a heating water system, and hydronic heat exchanger coils.

B23.2.15 Double-Skin Façade Comparative and Empirical Validation Tests [B-95]. Developed by Aalborg University in conjunction with IEA SHC Task 34/ECBCS Annex 43, this project assessed the ability of building energy analysis tools to predict heat transfer, ventilation flow rates, cavity air and surface temperatures, and solar protection effect and interaction with building services systems in buildings with a double-skin façade. Comparative and empirical validation test cases include variations with all façade openings closed, all façade openings open to the outside, and bottom façade opening open to outside while the top opening is open to inside. Within the test cases are a number of variations to check the influence of various parameters, including driving force of airflow (buoyancy, wind, mechanical fan, combined forces), internal (thermal) and external (thermal, solar, wind) boundary conditions, and opening area (fully opened, opening area controlled by temperature and/or airflow rate).

B23.3 Recommended Additional Research. The additional tests listed in Section B23.2 do not cover the following areas:

a. *Comparative Tests—Mechanical and On-Site Energy Generation Equipment.* Additional tests beyond those in the HVAC BESTEST unitary cooling and heating equipment cases (Sections 5.3 and 5.4), Airside HVAC BESTEST analytical verification cases (Section 5.5), RADTEST (Section B23.2.7), and hydronic space-conditioning equipment tests (Section B23.2.14)

b. *Analytical Verification—Mechanical and On-Site Energy Generation Equipment.* Additional tests beyond those in the HVAC BESTEST unitary cooling and heating equipment cases (Sections 5.3 and 5.4) and Airside HVAC BESTEST (Section 5.5)

c. *Empirical Validation*

- *Building Thermal Fabric*. A set of carefully controlled empirical experiments with sequential logic similar to that in the Standard 140 comparative test cases of Sections 5.2.1, 5.2.2, and 5.2.3.

- *Mechanical and On-Site Energy Generation Equipment.* Additional tests beyond the U.S. DOE tests (Section B23.2.3), economizer control tests (Section B23.2.11), and hydronic equipment tests (Section B23.2.14).

More work to develop such methods of test is recommended.

Copyrighted material licensed to Sei Ito on 2020-06-26 for licensee's use only. All rights reserved. No further reproduction or distribution is permitted. Distributed by Techstreet for ASHRAE, www.techstreet.com

(This annex is not part of the standard. It is merely informative and does not contain requirements necessary for conformance to the standard. It has not been processed according to the ANSI requirements for a standard and may contain material that has not been subject to public review or a consensus process. Unresolved objectors on informative material are not offered the right to appeal at ASHRAE or ANSI.)

INFORMATIVE ANNEX B24
INFORMATIVE REFERENCES

B-1 ASHRAE. (2012). *Handbook of HVAC Systems and Equipment.* Atlanta, Georgia, U.S.A.: American Society of Heating, Refrigerating and Air-Conditioning Engineers.

B-2 AMCA/ASHRAE. (1985). *Laboratory Methods of Testing Fans for Certified Aerodynamic Performance Rating.* ANSI/AMCA 210-85 or ANSI/ASHRAE 51-85. Arlington Heights, Illinois, U.S.A.: Air Movement and Control Association International, Inc. Atlanta, Georgia, U.S.A.: American Society of Heating, Refrigerating, and Air-Conditioning Engineers. See Section 9.8.2.

B-3 AMCA/ASHRAE. (2007). *Laboratory Methods of Testing Fans for Certified Aerodynamic Performance Rating.* ANSI/AMCA 210-07 or ANSI/ASHRAE 51-07. Arlington Heights, Illinois, U.S.A.: Air Movement and Control Association International, Inc. Atlanta, Georgia, U.S.A.: American Society of Heating, Refrigerating, and Air-Conditioning Engineers.

B-4 McQuiston, F.; Parker, J. (1994). *HVAC Analysis and Design.* Fourth Edition. New York, New York, U.S.A.: John Wiley & Sons. See Chapter 12.

B-5 ANSI/ARI 210/240. 1989. *Unitary Air-Conditioning and Air-Source Heat Pump Equipment*. Arlington, VA: Air-Conditioning and Refrigeration Institute.

B-6 Neymark, J.; Kennedy, M.; Judkoff, R.; Gall, J.; Henninger, R.; Hong, T.; Knebel, D.; McDowell, T.; Witte, M.; Yan, D.; Zhou, X. (2016). *Airside HVAC BESTEST: Adaptation of ASHRAE RP 865 Airside HVAC Equipment Modeling Test Cases for ASHRAE Standard 140, Volume 1: Cases AE101 – AE445.* NREL/TP-5500-66000. Golden, Colorado, U.S.A.: National Renewable Energy Laboratory. www.nrel.gov/docs/fy16osti/66000.pdf.

B-7 ASHRAE. (2009). *Handbook of Fundamentals.* Atlanta, Georgia, U.S.A.: American Society of Heating, Refrigerating and Air-Conditioning Engineers. Regarding conversion factors, see Chapter 38; regarding psychrometrics, see Chapter 1; regarding surface heat transfer coefficients, see Chapter 26.

B-8 Yuill, G.K.; J.S. Haberl. (2002). *Development of Accuracy Tests For Mechanical System Simulation.* Final Report for ASHRAE 865-RP. Omaha, NE: University of Nebraska Architectural Engineering Program.

B-9 Delsante, A.E., A.N. Stokes, and P.J. Walsh. 1983. Application of Fourier Transforms to Periodic Heat Flow into the Ground under a Building. *International Journal of Heat Mass Transfer* 26(1):121–32.

B-10 2009 *ASHRAE Handbook—Fundamentals.* Atlanta: ASHRAE.

B-11 Palmiter, L., T. Wheeling, R. Judkoff, D. Wortman, D. Simms, and R. O'Doherty. 1983. *Solar Energy Research Institute Residential Energy Simulator, version 1.0*. Golden, CO: Solar Energy Research Institute (National Renewable Energy Laboratory).

B-12 *BLAST User Reference*, Volume 1 and Volume 2. (1991). BLAST Support Office. Urbana, IL: University of Illinois.

B-13 Spitler, J.D., S.J. Rees, and D. Xiao. 2001. *Development of an Analytical Verification Test Suite for Whole Building Energy Simulation Programs—Building Fabric.* Final Report for ASHRAE 1052-RP. Atlanta: ASHRAE.

B-14 Neymark, J., R. Judkoff, I. Beausoleil-Morrison, A. Ben-Nakhi, M. Crowley, M. Deru, R. Henninger, H. Ribberink, J. Thornton, A. Wijsman, and M. Witte. 2008. *International Energy Agency Building Energy Simulation Test and Diagnostic Method (IEA BESTEST) In-Depth Diagnostic Cases for Ground Coupled Heat Transfer Related to Slab-on-Grade Construction.* NREL/TP-550-43388. Golden, CO: National Renewable Energy Laboratory. In collaboration with International Energy Agency Solar Heating and Cooling Program Task 34 and Energy Conservation in Buildings and Community Systems Annex 43. www.nrel.gov/docs/fy08osti/43388.pdf.

B-15 Brandemuehl, M. 1993. *HVAC 2 Toolkit: A Toolkit for Secondary HVAC System Energy Calculations*, pp. 4–82, 4–83. Atlanta: ASHRAE.

B-16 Neymark, J., and R. Judkoff. 2002. *International Energy Agency Building Energy Simulation Test and Diagnostic Method for Heating, Ventilating, and Air-Conditioning Equipment Models (HVAC BESTEST) Volume 1: Cases E100-E200.* NREL/TP-550-30152. Golden, CO: National Renewable Energy Laboratory. www.nrel.gov/docs/fy02osti/30152.pdf.

B-17 Neymark, J., and R. Judkoff. 2004. *International Energy Agency Building Energy Simulation Test and Diagnostic Method for Heating, Ventilating, and Air-Conditioning Equipment Models (HVAC BESTEST), Volume 2: Cases E300-E545*. NREL/TP-550-36754. Golden, CO: National Renewable Energy Laboratory. Available from www.nrel.gov/docs/fy05osti/36754.pdf.

B-18 Henderson, H. 1998. Part-Load Curves for Use in DOE-2. Prepared for the Lawrence Berkley Laboratory, CDH Energy Corporation, Cazenovia.

B-19 Judkoff, R.; Neymark, J. (1995). *International Energy Agency Building Energy Simulation Test (BESTEST) and Diagnostic Method.* NREL/TP-472-6231, Golden, Colorado, U.S.A.: National Renewable Energy Laboratory. www.nrel.gov/docs/legosti/old/6231/pdf. (See Appendix D.)

B-20 Walton, G. (1983). Thermal Analysis Research Program Reference Manual (TARP). NBSIR 83-2655. Wash-

Copyrighted material licensed to Sei Ito on 2020-06-26 for licensee's use only. All rights reserved. No further reproduction or distribution is permitted. Distributed by Techstreet for ASHRAE, www.techstreet.com

ington, D.C.: National Bureau of Standards (now called National Institute of Standards and Technology).

B-21 Herrmann, S.; Kretzschmar, H.-J.; Gatley, D.P. (2011). *Thermodynamic Properties of Real Moist Air, Dry Air, Steam, Water, and Ice.* Final report for ASHRAE RP-1485. Zittau, Germany: Zittau/Goerlitz University of Applied Sciences, Department of Technical Thermodynamics.

B-22 Kretzschmar, H.-J.; Herrmann, S.; Stoecker, I.; Kunick, M.; Nicke, M.; Gatley, D.P. (2011). *ASHRAE User's Guide for LibHuAirProp Library of Psychrometric, Thermodynamic, and Transport Properties for* Real *Humid Air, Steam, Water and Ice.* Atlanta, Georgia, U.S.A.: American Society of Heating, Refrigerating and Air-Conditioning Engineers.

B-23 McQuiston, F., and J. Spitler. 1992. *Cooling and Heating Load Calculation Manual*, Second Edition, p. 4.12. Atlanta: ASHRAE.

B-24 Kennedy, M., L. Palmiter, and T. Wheeling. 1992. *SUN-CODE-PC Building Load Simulation Program.* Available from Ecotope, Inc. This software is based on SERIRES-1.0 developed at NREL. See also Palmiter et al.[B-11]

B-25 WINDOW 4.1. 1994. Lawrence Berkeley Laboratory, Berkeley, CA 94720, LBL-35298.

B-26 1993 *ASHRAE Handbook—Fundamentals*, pp. 25.10–25.12 (and elsewhere, as noted in the text). Atlanta: ASHRAE.

B-27 Wang, F.S. 1979. Mathematical Modeling and Computer Simulation of Insulation Systems in Below Grade Applications. Presented at ASHRAE/DOE Conference on Thermal Performance of the Exterior Envelopes of Buildings, Orlando, FL, December.

B-28 Latta, J.K., and G.G. Boileau. 1969. Heat losses from house basements. *Canadian Building* 19(10):39.

B-29 Judkoff, R., and J. Neymark. 1995. *International Energy Agency Building Energy Simulation Test (BESTEST) and Diagnostic Method*. NREL/TP-472-6231. Golden, CO: National Renewable Energy Laboratory. www.nrel.gov/docs/legosti/old/6231.pdf.

B-30 2001 *ASHRAE Handbook—Fundamentals.* Atlanta: ASHRAE.

B-31 Brandemuehl, M. 1993. *HVAC 2 Toolkit: A Toolkit for Secondary HVAC System Energy Calculation*, pp. 7–15. Atlanta: ASHRAE.

B-32 2005 *ASHRAE Handbook—Fundamentals.* Atlanta: ASHRAE.

B-33 Walton, G. 1983. *Thermal Analysis Research Program Reference Manual (TARP).* NBSIR 83-2655. Washington, DC: National Bureau of Standards (National Institute of Standards and Technology). (Note that this software is based on BLAST, and the manual has a high level of technical detail. Since the BLAST Support Office does not supply an engineer's manual, the TARP manual is used as a substitute.)

B-34 Augustyn, J., R. Perez, and C. Barnaby. 1996. *WYEC 2 Weather Year for Energy Calculations*. Atlanta: ASHRAE.

B-35 National Climatic Data Center. 1981. *Typical Meteorological Year User's Manual*. TD-9734. Asheville, NC: National Climatic Data Center, U.S. Department of Commerce.

B-36 Duffie, J.A. and W.A. Beckman. (1991). *Solar Engineering of Thermal Processes*. Second Edition. New York, NY: John Wiley & Sons.

B-37 Marion, W., and K. Urban. 1995. *User's Manual for TMY2s Typical Meteorological Years.* Golden, CO: National Renewable Energy Laboratory.

B-38 Judkoff, R., and J. Neymark. 1995. *Home Energy Rating System Building Energy Simulation Test (HERS BESTEST), Volume 1: Tier 1 and Tier 2 Tests User's Manual.* NREL/TP-472-7332a. Golden, CO: National Renewable Energy Laboratory. www.nrel.gov/docs/legosti/fy96/7332a.pdf.

B-39 Judkoff, R., and J. Neymark. 1995. *Home Energy Rating System Building Energy Simulation Test (HERS BESTEST), Volume 2: Tier 1 and Tier 2 Tests Reference Results.* NREL/TP-472-7332b. Golden, CO: National Renewable Energy Laboratory. www.nrel.gov/docs/legosti/fy96/7332b.pdf.

B-40 *DOE-2 Reference Manual (Version 2.1A) Part 1*. (May 1981). D. York, C. Cappiello, eds. Los Alamos, NM: Los Alamos Scientific Laboratory; Berkeley, CA: Lawrence Berkeley Laboratory.

B-41 *ASHRAE Terminology of Heating, Ventilation, Air Conditioning, and Refrigeration*. 1991. Atlanta: ASHRAE. (Also see www.ashrae.org/resources--publications/free-resources/ashrae-terminology.)

B-42 Clarke, J.A., J.W. Hand, P. Strachan, J.L.M. Hensen, and C.E.E. Pernot. 1991. *ESP-r, A Building and Plant Energy Simulation Environment*. Energy Simulation Research Unit, ESRU Manual U91/2, University of Strathclyde, Glasgow, UK.

B-43 WINDOW 4.0. 1992. LBL-32091, UC-350. Berkeley, CA: Lawrence Berkeley National Laboratory

B-44 Kreith, F., and M. Bohn. 1993. *Principles of Heat Transfer*, Fifth edition. St. Paul, MN: West Publishing Company.

B-45 Haves, P. n.d. *SERI-RES/PC SERI-RES*, *Version 1.2, for IBM-PC and MS-DOS Microcomputers User's Guide*. London, UK: Polytechnic of Central London, Energy Technology Support Unit.

B-46 *DOE-2 Supplement (Version 2.1D)*. 1989. Berkeley, CA: Lawrence Berkeley Laboratory.

B-47 Bloomfield D., Y. Candau, P. Dalicieux, S. Delille, S. Hammond, K.J. Lomas, C. Martin, F. Parand, J. Patronis, and N. Ramdani. 1995. New techniques for validating building energy simulation programs. *Proceedings of Building Simulation '95*, Madison, Wisconsin, USA, IBPSA.

B-48 Jensen, S.O. 1993. Empirical whole model validation case study: The PASSYS reference wall. *Proceedings of Building Simulation '93*, Adelaide, Australia, IBPSA.

Copyrighted material licensed to Sei Ito on 2020-06-26 for licensee's use only. All rights reserved. No further reproduction or distribution is permitted. Distributed by Techstreet for ASHRAE, www.techstreet.com

[B-49]Aittomäki, A., and T. Kalema. 1976. *TASE—A Computer Program for Energy Analysis of Buildings*. Technical Research Centre of Finland, Espoo, Finland.

[B-50]*S3PAS User's Manual*, Escuela Superior Ingenieros Industriales, Sevilla, Spain.

[B-51]Klein, S.A. 1990. *TRNSYS: A Transient System Simulation Program*. Madison, WI: Solar Energy Lab, University of Wisconsin.

[B-52]Henderson, H., Y.J. Huang, and D. Parker. 1999. *Residential Equipment Part Load Curves for Use in DOE-2.* LBNL-42175. Berkeley, CA: Lawrence Berkeley National Laboratory.

[B-53]Shirey, D., and H. Henderson. 2004. Dehumidification at part load. *ASHRAE Journal* 46(4). Atlanta: ASHRAE.

[B-54]McQuiston, F., and J. Parker. 1994. *HVAC Analysis and Design*, Fourth Edition, pp. 77–81. New York: John Wiley & Sons.

[B-55]Howell, R.H., H.J. Sauer, and W.J. Coad. 1998. *Principles of Heating, Ventilating, and Air Conditioning*, pp. 3.4–3.5. Atlanta: ASHRAE.

[B-56]*ASHRAE Psychrometric Chart No. 1*. 1992. Atlanta: ASHRAE.

[B-57]ANSI/AMCA 210, ANSI/ASHRAE 51. 1985. *Laboratory Methods of Testing Fans for Rating*, pp. 4, 40, 46–48. Jointly published by the Air Movement and Control Association Inc., Arlington Heights, IL, and ASHRAE, Atlanta, GA.

[B-58]Purdy, J., and I. Beausoleil-Morrison. 2003. *Building Energy Simulation Test for Heating, Ventilating, and Air-Conditioning Equipment Models (HVAC BESTEST), IEA Fuel-Fired Furnace.* Ottawa, ON: CANMET Energy Technology Centre, Natural Resources Canada. www.iea-shc.org/data/sites/1/publications/Furnace%20HVAC%20BESTEST%20Report.pdf.

[B-59]Le, H.-T., and G. Knabe. 2000. *HVAC BESTEST Modeler Report Analytical Solution.* Dresden, Germany: Dresden University of Technology. Included in HVAC BESTEST, Volume 1, Part II.[B-16]

[B-60]Dürig, M., A.S. Glass, and G. Zweifel. (2000). *HVAC-BESTEST. International Energy Agency. Analytical and Numerical Solution for Case E100-E200.* Horw-Lucerne, Switzerland: University of Applied Sciences of Central Switzerland. October 2000. Included in HVAC BESTEST, Volume 1, Part II.[B-16]

[B-61]Glass, A.S. (2000). Third-party quasi-analytical solution review comments via email communications with M. Durig, H.T. Le, and J. Neymark. Horw-Lucerne, Switzerland: University of Applied Sciences of Central Switzerland.

[B-62]*DOE-2 Supplement (Version 2.1E)*. 1994. Berkeley, CA: Lawrence Berkeley Laboratory.

[B-63]Spiegel, M.R. 1961. *Schaum's Outline of Theory and Problems of Statistics*. New York: McGraw-Hill.

[B-64]Yuill, G.K., and J.S. Haberl. 2002. *Development of Accuracy Tests for Mechanical System Simulation.* Final Report for ASHRAE 865-RP. Omaha, NE: University of Nebraska Architectural Engineering Program.

[B-65]Judkoff, R., and J. Neymark. 2009. What did they do in IEA 34/43? Or how to diagnose and repair bugs in 500,000 lines of code. *Proceedings Building Simulation 2009*, Glasgow, U.K., July 27–30, 2009. International Building Performance Simulation Association. Also see the preprinted version, NREL CP-550-44978. Golden, CO: National Renewable Energy Laboratory www.nrel.gov/docs/fy09osti/44978.pdf.

[B-66]Judkoff, R., and J. Neymark. 2006. Model validation and testing: The methodological foundation of ASHRAE Standard 140. *ASHRAE Transactions* 112(2):367–376. Also see NREL/CP-550-40360, preprinted version. Golden, CO: National Renewable Energy Laboratory. www.nrel.gov/docs/fy06osti/40360.pdf.

[B-67]Judkoff, R., D. Wortman, R. O'Doherty, and J. Burch. 1983/2008. *A Methodology for Validating Building Energy Analysis Simulations*. SERI/TR-254-1508. Golden, CO: National Renewable Energy Laboratory (formerly Solar Energy Research Institute). Republished as NREL/TP-550-42059, April 2008. www.nrel.gov/docs/fy08osti/42059.pdf.

[B-68]Judkoff, R. 1988. Validation of building energy analysis simulation programs at the solar energy research institute. *Energy and Buildings* 10(3):235.

[B-69]Hunn, B.D., W.V. Turk, and W.O. Wray. 1982. *Validation of Passive Solar Analysis/Design Tools Using Class A Performance Evaluation Data.* LA UR821732, Los Alamos National Laboratory, NM.

[B-70]Lomas, K., H. Eppel, C. Martin, and D. Bloomfield. 1994. *Empirical Validation of Thermal Building Simulation Programs Using Test Room Data*, Volume 1, Final Report. International Energy Agency Report #IEA21RN399/94. Vol. 2, Empirical Validation Package (1993), IEA21RR5/93. Vol. 3, Working Reports (1993), IEA21RN375/93. De Montfort University, Leicester, U.K.

[B-71]Achermann, M.; Zweifel, G. (2003). *RADTEST—Radiant Heating and Cooling Test Cases.* Horw-Lucerne, Switzerland: University of Applied Sciences of Central Switzerland, Lucerne School of Engineering and Architecture. www.iea-shc.org/data/sites/1/publications/RADTEST_final.pdf.

[B-72]Judkoff, R., D. Wortman, C. Christensen, B. O'Doherty, D. Simms, and M. Hannifan. 1980. *A comparative study of four passive building energy simulations: DOE2.1, BLAST, SUNCAT2.4, DEROBIII.* SERI/TP 721837. UC59c. Solar Energy Research Institute (now National Renewable Energy Laboratory), Golden, CO.

[B-73]Morck, O. 1986. *Simulation Model Validation Using Test Cell Data.* IEA SHC Task VIII, Report #176, Thermal Insulation Laboratory, Technical University of Denmark, Lyngby.

[B-74]Irving, A. 1988. *Validation of Dynamic Thermal Models, Energy, and Buildings.* Lausanne, Switzerland: Elsevier Sequoia.

[B-75]Bland, B. 1992. Conduction in dynamic thermal models: Analytical tests for validation. *Building Services Engineering Research & Technology* 13(4):197–208.

[B-76]Bloomfield, D. 1988. *An Investigation into Analytical and Empirical Validation Techniques for Dynamic Thermal Models of Buildings,* Volume 1, Executive Sum-

Copyrighted material licensed to Sei Ito on 2020-06-26 for licensee's use only. All rights reserved. No further reproduction or distribution is permitted. Distributed by Techstreet for ASHRAE, www.techstreet.com

mary. SERC/BRE Final Report, Building Research Establishment, Garston, U.K.

B-77 Bloomfield. D. 1999. An overview of validation methods for energy and environmental software. *ASHRAE Transactions* 105(2).

B-78 Guyon, G. and E. Palomo. 1999. Validation of two French building energy analysis programs—Part 1: Analytical verification. *ASHRAE Transactions* 105(2).

B-79 Lomas, K. 1991. Dynamic thermal simulation models of buildings: New method of empirical validation. *Building Services Engineering Research & Technology* 12(1):25–37.

B-80 Lomas, K. and N. Bowman. 1987. Developing and testing tools for empirical validation. Chapter 14, Volume IV of SERC/BRE Final Report, *An Investigation into Analytical and Empirical Validation Techniques for Dynamic Thermal Models of Buildings.* Building Research Establishment, Garston, U.K.

B-81 Lomas, K. and H. Eppel. 1992. Sensitivity analysis techniques for building thermal simulation programs. *Energy and Buildings* (19)1:21–44.

B-82 Jensen, S., ed. 1989. *The PASSYS Project Phase 1—Subgroup Model Validation and Development, Final Report (1986–1989).* Commission of the European Communities, Directorate General XII.

B-83 Jensen, S., and R. van de Perre. 1991. Tools for whole model validation of building simulation programs: Experience from the CEC concerted action PASSYS. *Proceedings of Building Simulation'91*, Nice, France. International Building Performance Simulation Association.

B-84 Neymark, J., R. Judkoff, I. Beausoleil-Morrison, A. Ben-Nakhi, M. Crowley, M. Deru, R. Henninger, H. Ribberink, J. Thornton, A. Wijsman, and M. Witte. 2009. IEA BESTEST in-depth diagnostic cases for ground coupled heat transfer related to slab-on-grade construction. *Proceedings Building Simulation 2009*, Glasgow, U.K., July 27–30, 2009. International Building Performance Simulation Association. Also see the preprinted version, NREL CP-550-45742. Golden, CO: National Renewable Energy Laboratory. www.nrel.gov/docs/fy09osti/45742.pdf.

B-85 Neymark, J., R. Judkoff, D. Alexander, C. Felsmann, P. Strachan, and A. Wijsman. 2011. IEA BESTEST multi-zone non-airflow in-depth diagnostic cases. *Proceedings Building Simulation 2011*, Sydney, Australia, November 14–16. International Building Performance Simulation Association. Also see the pre-printed version, NREL CP-5500-51589. National Renewable Energy Laboratory, Golden, CO. www.nrel.gov/docs/fy12osti/51589.pdf.

B-86 Neymark, J., R. Judkoff, D. Alexander, D., C. Felsmann, P. Strachan, A. Wijsman. 2008. *International Energy Agency Building Energy Simulation Test and Diagnostic Method (IEA BESTEST) Multi-Zone Non-Airflow In-Depth Diagnostic Cases: MZ320–MZ360.* NREL Report No. TP-550-43827. Golden, CO: National Renewable Energy Laboratory. www.nrel.gov/docs/fy08osti/43827.pdf

B-87 Judkoff, R., J. Neymark, B. Polly, and M. Bianchi. 2011. The Building Energy Simulation Test for Existing Homes (BESTEST-EX) methodology. *Proceedings Building Simulation 2011*, International Building Performance Simulation Association. Also see the preprinted version, NREL CP-5500-51655. National Renewable Energy Laboratory, Golden, CO. www.nrel.gov/docs/fy12osti/51655.pdf.

B-88 Judkoff, R., B. Polly, M. Bianchi, J. Neymark, and M. Kennedy. 2011. *Building Energy Simulation Test for Existing Homes (BESTEST-EX): Instructions for Implementing the Test Procedure, Calibration Test Reference Results, and Example Acceptance-Range Criteria.* NREL/TP-5500-52414. Golden, CO: National Renewable Energy Laboratory. www.nrel.gov/docs/fy11osti/52414.pdf.

B-89 RESNET. 2014. *Procedures for Verification of International Energy Conservation Code (IECC) Performance Path Calculation Tools.* RESNET Publication No. 07-003. March 2014. Oceanside, CA: Residential Energy Services Network, Inc. www1.resnet.us/standards/iecc/procedures.pdf.

B-90 Neymark, J., P. Girault, G. Guyon, R. Judkoff, R. LeBerre, J. Ojalvo, and P. Reimer. 2005. *The ETNA BESTEST Empirical Validation Data Set.* Building Simulation 2005, Ninth International IBPSA Conference, Montréal, Canada, August 15–18, 2005. International Building Performance Simulation Assocation.

B-91 Maxwell, G., P. Loutzenhiser, and C. Klaassen. 2003. *Daylighting—HVAC Interaction Tests for the Empirical Validation of Building Energy Analysis Tools.* Ames, Iowa: Iowa State University, Department of Mechanical Engineering. www.iea-shc.org/data/sites/1/publications/IEA%20Daylighting%20Report%20Final.pdf.

B-92 Maxwell, G., P. Loutzenhiser, and C. Klaassen. 2004. *Economizer Control Tests for the Empirical Validation of Building Energy Analysis Tools*. Ames Iowa: Iowa State University, Department of Mechanical Engineering. Ankeny, Iowa: Iowa Energy Center. www.iea-shc.org/data/sites/1/publications/IEA%20Economizer%20Report.pdf.

B-93 Loutzenhiser, P., H. Manz, and G. Maxwell. 2007. *Empirical Validations of Shading/Daylighting/Load Interactions in Building Energy Simulation Tools.* Duebendorf, Switzerland: Swiss Federal Laboratories for Materials Testing and Research; Ames, Iowa: Iowa State University. In conjunction with IEA: SHC Task 34/ECBCS Annex 43, Project C. http://task34.iea-shc.org/data/sites/1/publications/task34-Empirical_Validations.pdf

B-94 Felsmann, C. 2008. *Mechanical Equipment and Control Strategies for a Chilled Water and a Hot Water System.* Dresden, Germany: Technical University of Dresden. www.iea-shc.org/data/sites/1/publications/task34-subtaskd.pdf.

B-95 Kalyanova, O., and P. Heiselberg. 2009. *Empirical Validation of Building Simulation Software: Modeling of Double Facades Final Report.* DCE Technical Report No. 027. Aalborg, Denmark: Aalborg University.

Copyrighted material licensed to Sei Ito on 2020-06-26 for licensee's use only. All rights reserved. No further reproduction or distribution is permitted. Distributed by Techstreet for ASHRAE, www.techstreet.com

www.iea-shc.org/data/sites/1/publications/DSF_EMPIRICAL%20REPORT_18Jun2009.pdf.

B-96 ANSI/ASHRAE Standard 152. 2004. *Method of Test for Determining the Design and Seasonal Efficiencies of Residential Thermal Distribution Systems.* Atlanta: ASHRAE.

B-97 Duffie, J.A., and W.A. Beckman. 1974. *Solar Energy Thermal Processes*. New York: John Wiley & Sons.

B-98 McQuinston, F., and J. Parker. 1994. *HVAC Analysis and Design*, 4th edition. New York: John Wiley & Sons. p. 463.

B-99 LBNL. 2000. Documentation Update Package #2 DOE2.1E, Version 107. Lawrence Berkeley National Laboratory, University of California at Berkeley, Berkeley, CA.

B-100 Yuill, G., J. Haberl, and J. Caldwell. 2006. Accuracy tests for simulations of VAV dual duct, single zone, four-pipe fan coil, and four-pipe induction air-handling systems. *ASHRAE Transactions* 112(2):377–94.

B-101 ASHRAE. 2017. *ASHRAE Handbook—Fundamentals*. Atlanta: ASHRAE.

B-102 Judkoff, R., and J. Neymark J. 2013. Twenty years on!: Updating the IEA BESTEST building thermal fabric test cases for ASHRAE Standard 140. *Proceedings Building Simulation 2013, Chambéry, France, August 25-28, 2013. International Building Performance Simulation Association*. Also see the preprinted version, NREL CP-5500-58487. Golden, CO: National Renewable Energy Laboratory. www.nrel.gov/docs/fy13osti/58487.pdf.

B-103 ASHRAE. 2016. ANSI/ASHRAE/IESNA Standard 90.1, *Energy Standard for Buildings Except Low-Rise Residential Buildings.* Atlanta, GA: ASHRAE.

B-104 DOE. 2017. Qualified Software for Calculating Commercial Building Tax Deductions. Energy.Gov, Office Of Energy Efficiency And Renewable Energy, U.S. Department of Energy, Washington, DC. energy.gov/eere/buildings/qualified-software-calculating-commercial-building-tax-deductions.

B-105 RESNET. 2017. Resnet accredited programs. www.resnet.us/professional/programs.

B-106 ICC. 2015. *2015 International Energy Conservation Code (IECC)*. Country Club Hills, IL: International Code Council.

B-107 ICC. 2015. *2015 International Green Construction Code (IgCC)®*. Country Club Hills, IL: International Code Council.

B-108 ASHRAE. 2014. ANSI/ASHRAE Standard 189.1, *Standard for The Design of High Performance Green Buildings.* Atlanta, GA: ASHRAE.

B-109 Judkoff, R., J. D. Balcomb, C. E. Hancock, G. Barker, and K. Subbarao. 2000. *Side-By-Side Thermal Tests of Modular Offices: A Validation Study of the STEM Method.* NREL/TP-550-23940. Golden, CO: NREL. https://www.nrel.gov/docs/fy01osti/23940.pdf.

B-110 Subbarao, K. 1988. *PSTAR—Primary and secondary terms analysis and re-normalization: A unified approach to building energy simulations and short-term monitoring*. SERI/TR-253-3175 Golden, CO: NREL. https://www.nrel.gov/docs/legosti/old/3175.pdf.

B-111 Neymark, J., M. Kennedy, R. Judkoff, J. Gall, R. Henninger, T. Hong, D. Knebel, T. McDowell, M. Witte, D. Yan, and X. Zhou. 2017. Airside HVAC BESTEST: HVAC Air-Distribution System Model Test Cases for ASHRAE Standard 140. *Proceedings Building Simulation 2017*, San Francisco, CA, U.S., Aug 6 – 8, 2017. Eindhoven, The Netherlands: International Building Performance Simulation Association. Also see NREL CP-5500-68409. Golden, CO: National Renewable Energy Laboratory. www.nrel.gov/docs/fy09osti/45742.pdf.

B-112 Li, Q., G. Augenbroe, R. Muehleisen. 2017. A Framework for Empirical Validation of Buildinge Performance Simulation under Uncertainty. *Proceedings Building Simulation 2017*, San Francisco, CA, U.S., Aug. 6–8, 2017. Eindhoven, The Netherlands: International Building Performance Simulation Association.

Copyrighted material licensed to Sei Ito on 2020-06-26 for licensee's use only. All rights reserved. No further reproduction or distribution is permitted. Distributed by Techstreet for ASHRAE, www.techstreet.com

(This annex is not part of this standard. It is merely informative and does not contain requirements necessary for conformance to the standard. It has not been processed according to the ANSI requirements for a standard and may contain material that has not been subject to public review or a consensus process. Unresolved objectors on informative material are not offered the right to appeal at ASHRAE or ANSI.)

INFORMATIVE ANNEX C
ADDENDA DESCRIPTION INFORMATION

ANSI/ASHRAE Standard 140-2017 incorporates ANSI/ASHRAE Standard 140-2014 and Addendum a to ANSI/ASHRAE Standard 140-2014. Table C-1 describes the way in which the text is affected by the changes. It also lists the ASHRAE and ANSI approval dates for addendum a.

Table C-1 Addenda to ANSI/ASHRAE Standard 140-2014

Addendum	Sections Affected	Description of Changes[a]	ASHRAE Approval	ANSI Approval
a	3, 4, 5.1, 6.1.1; 5.5 (new), 6.5 (new); Normative Annexes A1 and A2; Informative Annexes B1, B10, B16, B17, B20 (cross-reference only), and B24; accompanying electronic files	Adds a new set of test cases within new Sections 5.5 and 6.5 of Standard 140. These test cases were adapted from *Airside HVAC BESTEST: Adaptation of ASHRAE RP 865 Airside HVAC Equipment Modeling Test Cases for ASHRAE Standard 140, Volume 1 Cases AE101 – AE445*, developed by the National Renewable Energy Laboratory in collaboration with ASHRAE SSPC 140 and several international software developers.	April 30, 2017	May 1, 2017

a. These descriptions may not be complete and are provided for information only.

NOTE

When addenda, interpretations, or errata to this standard have been approved, they can be downloaded free of charge from the ASHRAE Web site at http://www.ashrae.org.

Copyrighted material licensed to Sei Ito on 2020-06-26 for licensee's use only.
All rights reserved. No further reproduction or distribution is permitted. Distributed by Techstreet for ASHRAE, www.techstreet.com

NOTICE

INSTRUCTIONS FOR SUBMITTING A PROPOSED CHANGE TO THIS STANDARD UNDER CONTINUOUS MAINTENANCE

This standard is maintained under continuous maintenance procedures by a Standing Standard Project Committee (SSPC) for which the Standards Committee has established a documented program for regular publication of addenda or revisions, including procedures for timely, documented, consensus action on requests for change to any part of the standard. SSPC consideration will be given to proposed changes within 13 months of receipt by the Senior Manager of Standards (SMOS).

Proposed changes must be submitted to the SMOS in the latest published format available from the SMOS. However, the SMOS may accept proposed changes in an earlier published format if the SM`OS concludes that the differences are immaterial to the proposed change submittal. If the SMOS concludes that a current form must be utilized, the proposer may be given up to 20 additional days to resubmit the proposed changes in the current format.

ELECTRONIC PREPARATION/SUBMISSION OF FORM FOR PROPOSING CHANGES

An electronic version of each change, which must comply with the instructions in the Notice and the Form, is the preferred form of submittal to ASHRAE Headquarters at the address shown below. The electronic format facilitates both paper-based and computer-based processing. Submittal in paper form is acceptable. The following instructions apply to change proposals submitted in electronic form.

Use the appropriate file format for your word processor and save the file in either a recent version of Microsoft Word (preferred) or another commonly used word-processing program. Please save each change proposal file with a different name (for example, "prop01.doc," "prop02.doc," etc.). If supplemental background documents to support changes submitted are included, it is preferred that they also be in electronic form as word-processed or scanned documents.

For files submitted attached to an e-mail, ASHRAE will accept an electronic signature (as a picture; *.tif, or *.wpg) on the change submittal form as equivalent to the signature required on the change submittal form to convey non-exclusive copyright.

Submit an e-mail containing the change proposal files to:
change.proposal@ashrae.org

Alternatively, mail paper versions to:
ASHRAE
Senior Manager of Standards
1791 Tullie Circle, NE
Atlanta, GA 30329-2305

Or fax them to:
Attn: Senior Manager of Standards
404-321-5478

The form and instructions for electronic submittal may be obtained from the Standards section of ASHRAE's Home Page, www.ashrae.org, or by contacting a Standards Secretary via phone (404-636-8400), fax (404-321-5478), e-mail (standards.section@ashrae.org), or mail (1791 Tullie Circle, NE, Atlanta, GA 30329-2305).

Copyrighted material licensed to Sei Ito on 2020-06-26 for licensee's use only.
All rights reserved. No further reproduction or distribution is permitted. Distributed by Techstreet for ASHRAE, www.techstreet.com

FORM FOR SUBMITTAL OF PROPOSED CHANGE TO AN ASHRAE STANDARD UNDER CONTINUOUS MAINTENANCE

NOTE: Use a separate form for each comment. Submittals (Microsoft Word preferred) may be attached to e-mail (preferred), or submitted in paper by mail or fax to ASHRAE, Senior Manager of Standards, 1791 Tullie Circle, NE, Atlanta, GA 30329-2305. E-mail: change.proposal@ashrae.org. Fax: +1-404-321-5478.

1. Submitter:

Affiliation:

Address: City: State: Zip: Country:

Telephone: Fax: E-Mail:

I hereby grant ASHRAE the non-exclusive royalty rights, including non-exclusive rights in copyright, in my proposals. I understand that I acquire no rights in publication of the standard in which my proposals in this or other analogous form is used. I hereby attest that I have the authority and am empowered to grant this copyright release.

Submitter's signature: _____ Date: _____

All electronic submittals must have the following statement completed:

I *(insert name)*_____, through this electronic signature, hereby grant ASHRAE the non-exclusive royalty rights, including non-exclusive rights in copyright, in my proposals. I understand that I acquire no rights in publication of the standard in which my proposals in this or other analogous form is used. I hereby attest that I have the authority and am empowered to grant this copyright release.

2. Number and year of standard:

3. Page number and clause (section), subclause, or paragraph number:

4. I propose to: *(check one)*

[ ] Change to read as follows
[ ] Add new text as follows
[ ] Delete and substitute as follows
[ ] Delete without substitution

Use underscores to show material to be added (added) and strike through material to be deleted (~~deleted~~). Use additional pages if needed.

5. Proposed change:

6. Reason and substantiation:

7. Will the proposed change increase the cost of engineering or construction? If yes, provide a brief explanation as to why the increase is justified.

[ ] Check if additional pages are attached. Number of additional pages: _____

[ ] Check if attachments or referenced materials cited in this proposal accompany this proposed change. Please verify that all attachments and references are relevant, current, and clearly labeled to avoid processing and review delays. *Please list your attachments here:*

Copyrighted material licensed to Sei Ito on 2020-06-26 for licensee's use only.
All rights reserved. No further reproduction or distribution is permitted. Distributed by Techstreet for ASHRAE, www.techstreet.com

POLICY STATEMENT DEFINING ASHRAE'S CONCERN FOR THE ENVIRONMENTAL IMPACT OF ITS ACTIVITIES

ASHRAE is concerned with the impact of its members' activities on both the indoor and outdoor environment. ASHRAE's members will strive to minimize any possible deleterious effect on the indoor and outdoor environment of the systems and components in their responsibility while maximizing the beneficial effects these systems provide, consistent with accepted Standards and the practical state of the art.

ASHRAE's short-range goal is to ensure that the systems and components within its scope do not impact the indoor and outdoor environment to a greater extent than specified by the Standards and Guidelines as established by itself and other responsible bodies.

As an ongoing goal, ASHRAE will, through its Standards Committee and extensive Technical Committee structure, continue to generate up-to-date Standards and Guidelines where appropriate and adopt, recommend, and promote those new and revised Standards developed by other responsible organizations.

Through its *Handbook*, appropriate chapters will contain up-to-date Standards and design considerations as the material is systematically revised.

ASHRAE will take the lead with respect to dissemination of environmental information of its primary interest and will seek out and disseminate information from other responsible organizations that is pertinent, as guides to updating Standards and Guidelines.

The effects of the design and selection of equipment and systems will be considered within the scope of the system's intended use and expected misuse. The disposal of hazardous materials, if any, will also be considered.

ASHRAE's primary concern for environmental impact will be at the site where equipment within ASHRAE's scope operates. However, energy source selection and the possible environmental impact due to the energy source and energy transportation will be considered where possible. Recommendations concerning energy source selection should be made by its members.

Copyrighted material licensed to Sei Ito on 2020-06-26 for licensee's use only.
All rights reserved. No further reproduction or distribution is permitted. Distributed by Techstreet for ASHRAE, www.techstreet.com

Copyrighted material licensed to Sei Ito on 2020-06-26 for licensee's use only.
All rights reserved. No further reproduction or distribution is permitted. Distributed by Techstreet for ASHRAE, www.techstreet.com

ASHRAE · 1791 Tullie Circle NE · Atlanta, GA 30329 · www.ashrae.org

About ASHRAE

ASHRAE, founded in 1894, is a global society advancing human well-being through sustainable technology for the built environment. The Society and its members focus on building systems, energy efficiency, indoor air quality, refrigeration, and sustainability. Through research, Standards writing, publishing, certification and continuing education, ASHRAE shapes tomorrow's built environment today.

For more information or to become a member of ASHRAE, visit www.ashrae.org.

To stay current with this and other ASHRAE Standards and Guidelines, visit www.ashrae.org/standards.

Visit the ASHRAE Bookstore

ASHRAE offers its Standards and Guidelines in print, as immediately downloadable PDFs, on CD-ROM, and via ASHRAE Digital Collections, which provides online access with automatic updates as well as historical versions of publications. Selected Standards and Guidelines are also offered in redline versions that indicate the changes made between the active Standard or Guideline and its previous version. For more information, visit the Standards and Guidelines section of the ASHRAE Bookstore at www.ashrae.org/bookstore.

IMPORTANT NOTICES ABOUT THIS STANDARD

To ensure that you have all of the approved addenda, errata, and interpretations for this Standard, visit www.ashrae.org/standards to download them free of charge.

Addenda, errata, and interpretations for ASHRAE Standards and Guidelines are no longer distributed with copies of the Standards and Guidelines. ASHRAE provides these addenda, errata, and interpretations only in electronic form to promote more sustainable use of resources.

Product code: 86727 12/17