Sheet: ESP32-S3

File: ESP32-S3.sch

Sheet: POWER

File: POWER.sch

Sheet: LASER

File: LASER.sch

Sheet: SD

File: SD.sch

Sheet: P-AUX

File: P-AUX.sch

Sheet: USB

File: USB.sch

Sheet: DRIVER

File: DRIVER.sch

Sheet: ENDSTOP

File: ENDSTOP.sch

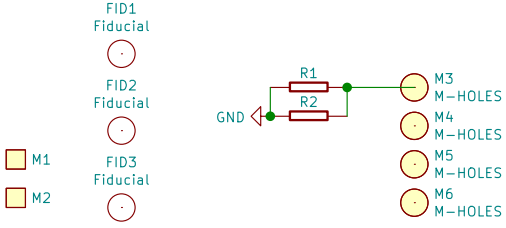

Github : https://github.com/makerbase-mks
FaceBook : https://www.facebook.com/Makerbase.mks/
Makerbase

Sheet: /
File: LS ESP32 PRO.sch

Title: LS ESP32 PRO

Size: A4	Date: 2023-11-21	**Rev: V2.1_002**
KiCad E.D.A. kicad (5.1.10)-1		Id: 1/9

表 5: Strapping 管脚

VDD_SPI 电压			
管脚	默认	3.3 V	1.8 V
GPIO45	下拉	0	1
系统启动模式 [1]			
管脚	默认	SPI 启动模式	下载启动模式
GPIO0	上拉	1	0
GPIO46	下拉	无关项	0
系统启动过程中，控制 ROM Code 打印 [2]			
管脚	默认	正常打印	上电不打印
GPIO46	下拉	详见第 2 条说明	详见第 2 条说明
JTAG 信号源选择			
管脚	默认	EFUSE_DIS_USB_JTAG = 0, EFUSE_DIS_PAD_JTAG = 0, EFUSE_STRAP_JTAG_SEL=1	
GPIO3	N/A	0：JTAG 信号来源于芯片上的 JTAG 管脚 1：JTAG 信号来源于 USB Serial/JTAG 控制器	

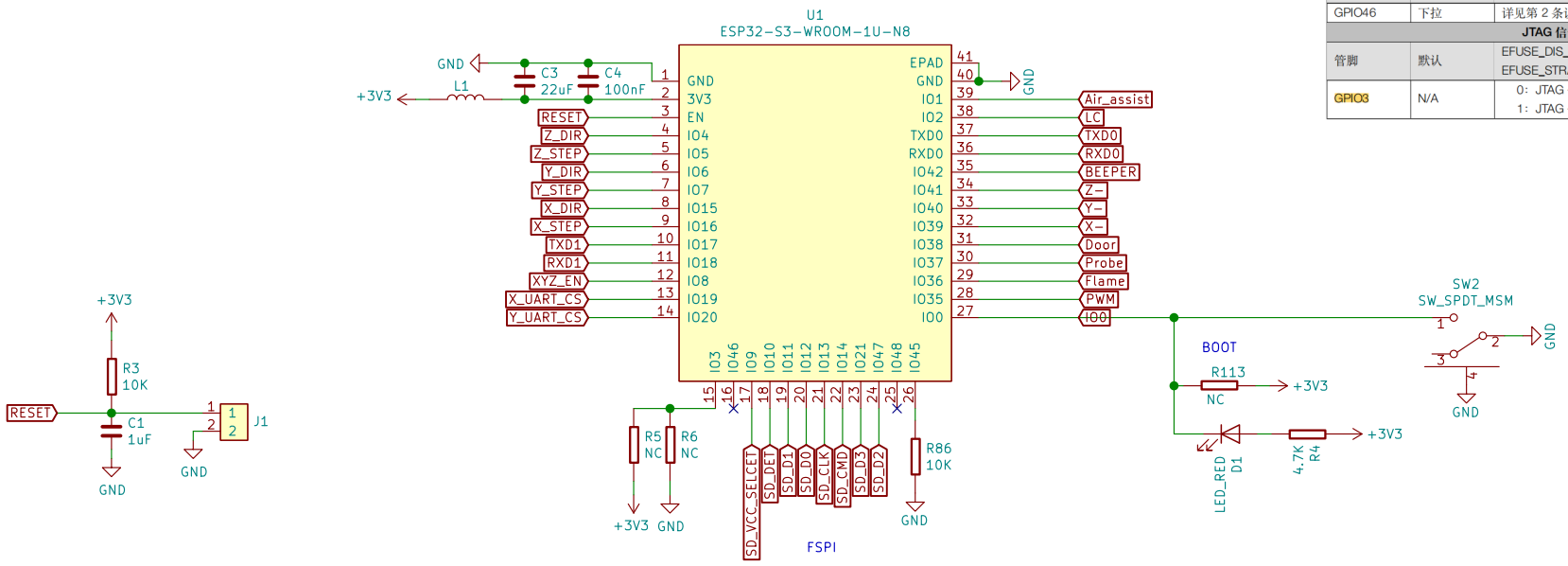

Github : https://github.com/makerbase-mks
FaceBook : https://www.facebook.com/Makerbase.mks/
Makerbase

Sheet: /ESP32-S3/
File: ESP32-S3.sch

Title: LS ESP32 PRO

Size: A4	Date: 2023-11-21	**Rev: V2.1_002**
KiCad E.D.A. kicad (5.1.10)-1		Id: 2/9

POWER INPUT
DC 12V~24V

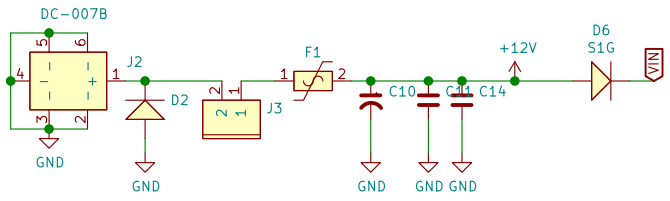

POWER For SD3.0

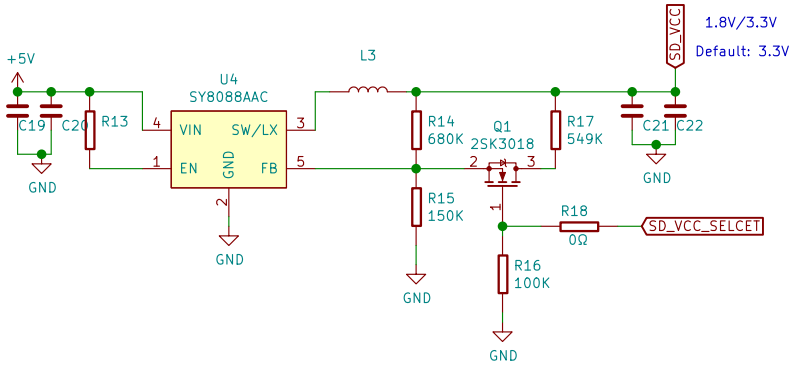

DC 5V

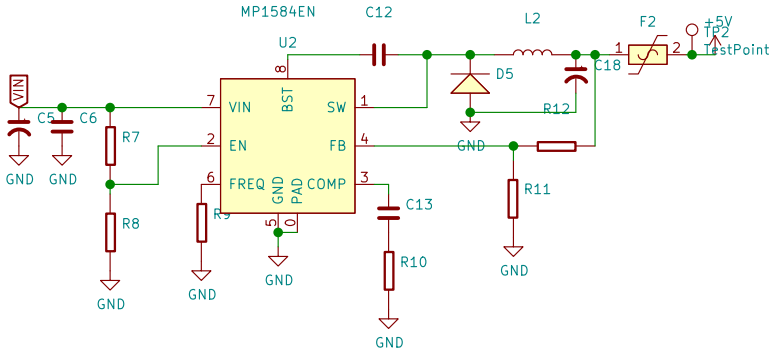

DC 3V3

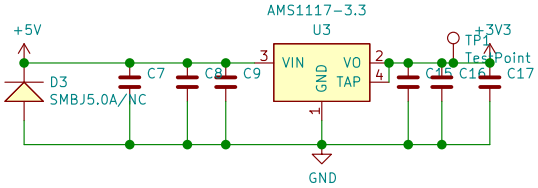

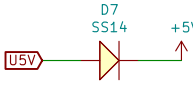

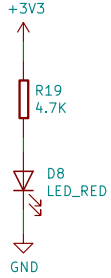

Makerbase

Github : https://github.com/makerbase-mks
FaceBook : https://www.facebook.com/Makerbase.mks/
Makerbase

Sheet: /POWER/
File: POWER.sch

Title: LS ESP32 PRO

Size: A4	Date: 2023-11-21	Rev: V2.1_002
KiCad E.D.A. kicad (5.1.10)-1		Id: 3/9

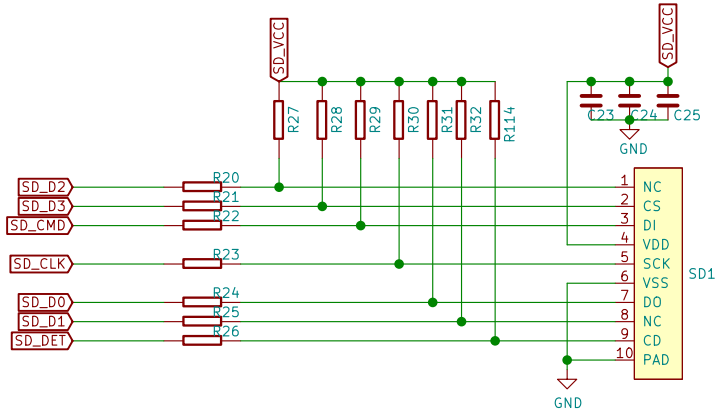

SD 3.0

Github : https://github.com/makerbase-mks
FaceBook : https://www.facebook.com/Makerbase.mks/
Makerbase

Sheet: /SD/
File: SD.sch

Title: LS ESP32 PRO

Size: A4	Date: 2023-11-21	**Rev: V2.1_002**
KiCad E.D.A. kicad (5.1.10)-1		Id: 4/9

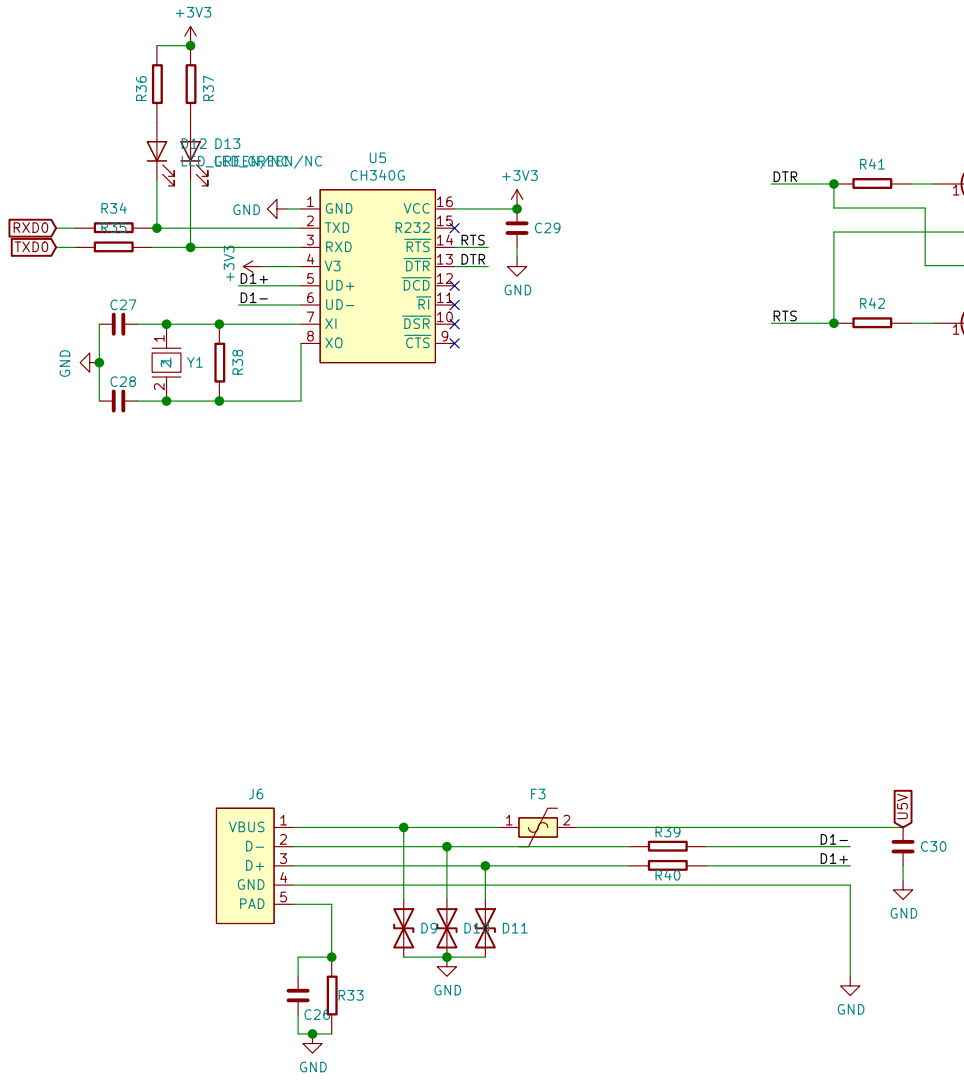

Github : https://github.com/makerbase-mks
FaceBook : https://www.facebook.com/Makerbase.mks/
Makerbase

Sheet: /USB/
File: USB.sch

Title: LS ESP32 PRO

Size: A4	Date: 2023-11-21	**Rev: V2.1_002**
KiCad E.D.A. kicad (5.1.10)-1		Id: 5/9

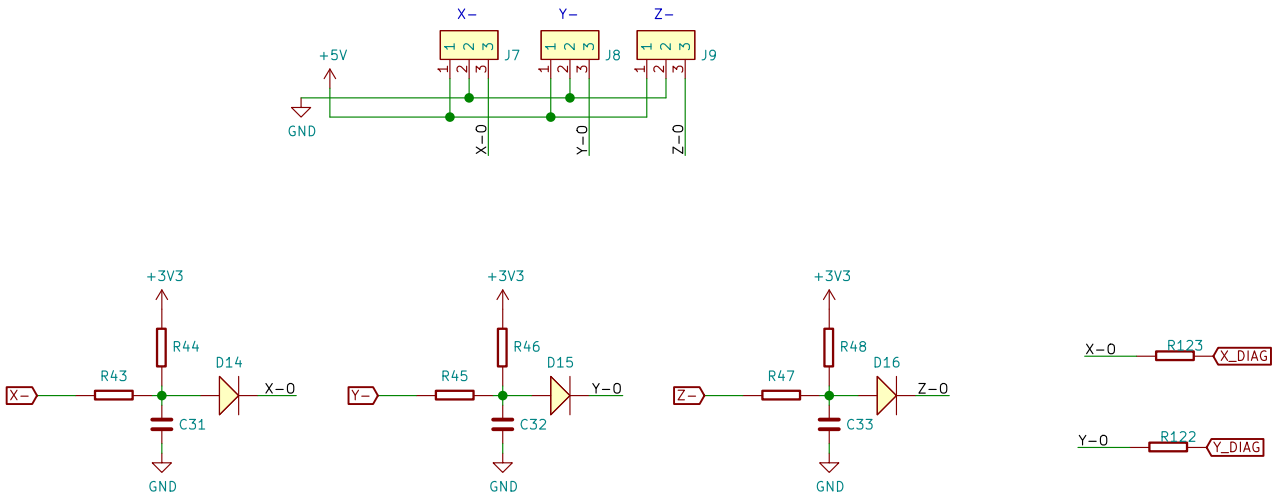

Github : https://github.com/makerbase-mks
FaceBook : https://www.facebook.com/Makerbase.mks/
Makerbase

Sheet: /ENDSTOP/
File: ENDSTOP.sch

Title: LS ESP32 PRO

Size: A4	Date: 2023-11-21	**Rev: V2.1_002**
KiCad E.D.A. kicad (5.1.10)-1		Id: 6/9

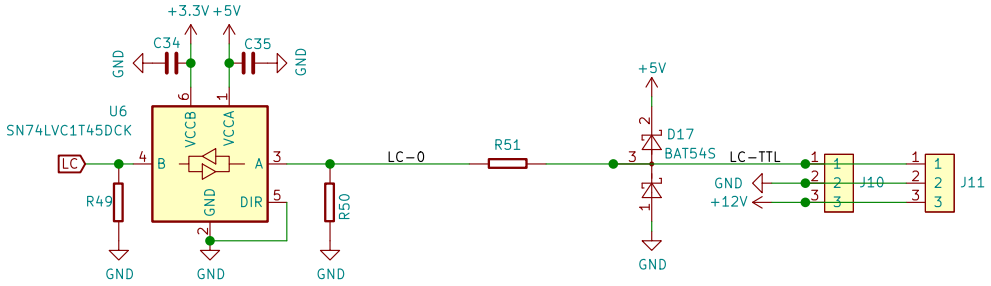

Makerbase

Github : https://github.com/makerbase-mks
FaceBook : https://www.facebook.com/Makerbase.mks/
Makerbase

Sheet: /LASER/
File: LASER.sch

Title: LS ESP32 PRO

Size: A4	Date: 2023-11-21	**Rev: V2.1_002**
KiCad E.D.A. kicad (5.1.10)-1		Id: 7/9

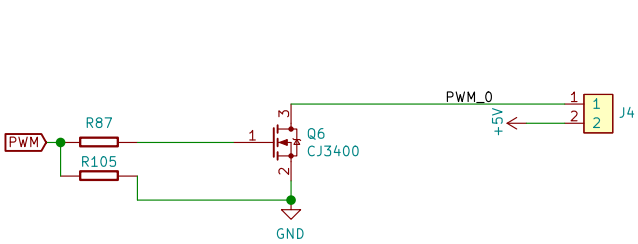

LED

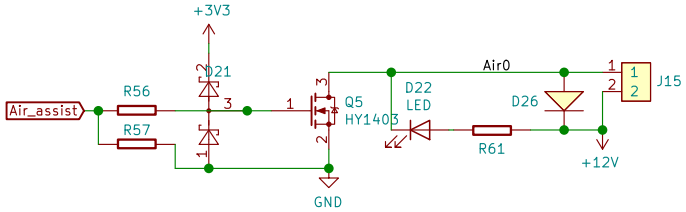

Air assist

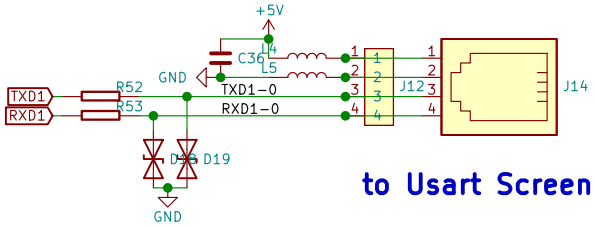

to Usart Screen

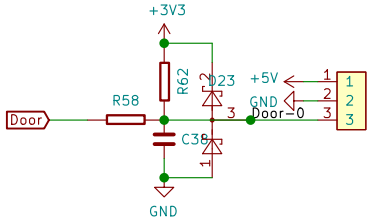

Door

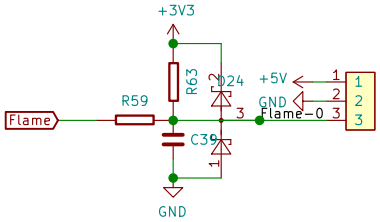

Flame

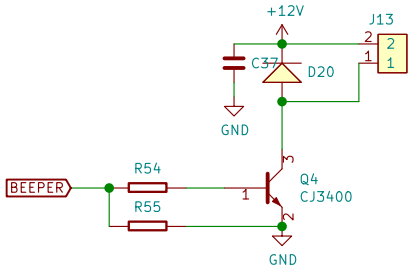

Beeper

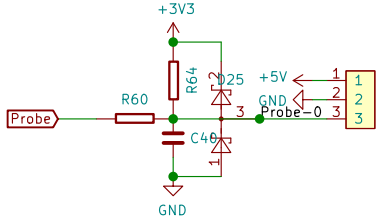

Probe

Github : https://github.com/makerbase-mks
FaceBook : https://www.facebook.com/Makerbase.mks/
Makerbase

Sheet: /P-AUX/
File: P-AUX.sch

Title: LS ESP32 PRO

Size: A4	Date: 2023-11-21	**Rev: V2.1_002**
KiCad E.D.A. kicad (5.1.10)-1		Id: 8/9

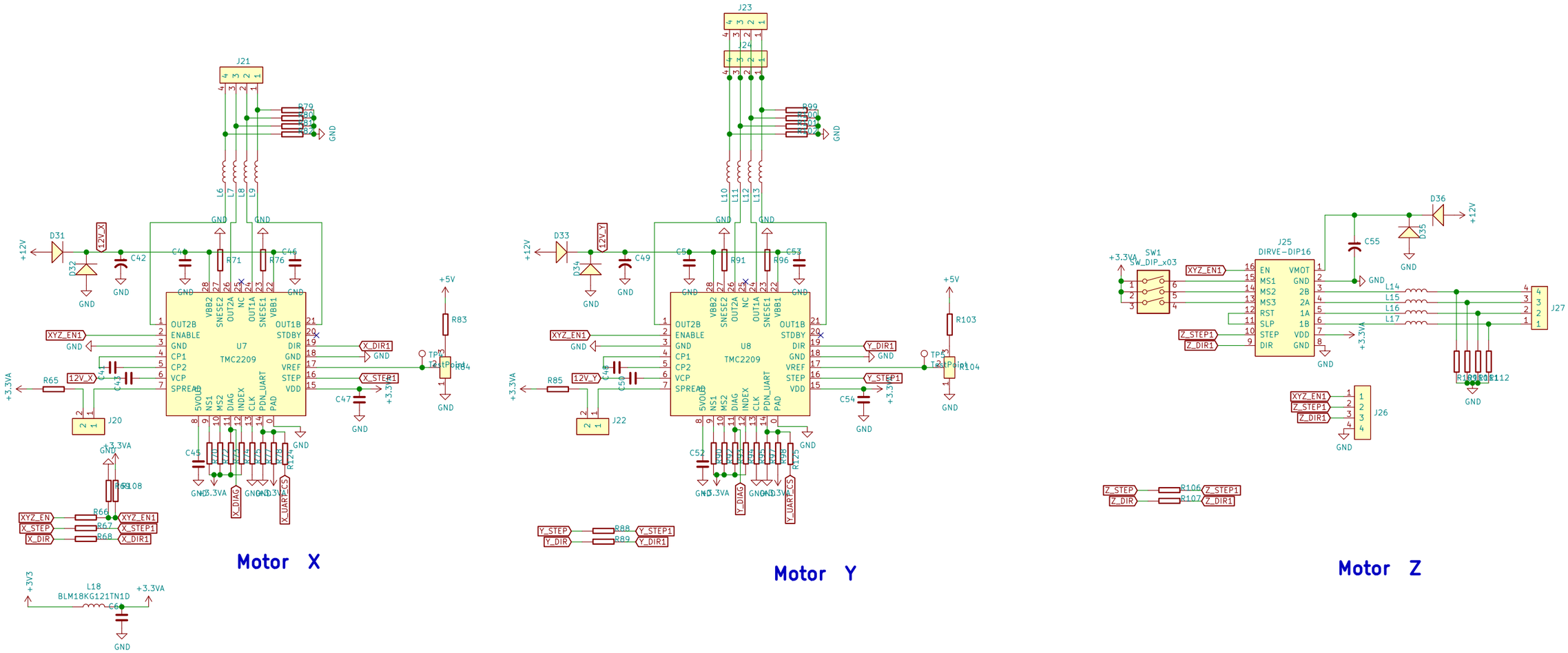

	2209	4988	MS35775
EN pin2:	20K	10K	10K
pin4:	22nF	100nF	22nF
pin8:	2.2uF	220nF	220nF
pin11:	NC	0Ω	NC
pin12:	NC	0Ω	NC
pin13:	20K	10K	10K
pin14:	20K/NC	NC/0Ω	100K/NC
pin15:	100nF	220nF	100nF
pin17:	TC33X-20K	TC33X-10K	TC33X-30K
pin23:	0.11Ω	0.1Ω	0.3Ω
pin27:	0.11Ω	0.1Ω	0.3Ω

Github : https://github.com/makerbase-mks
FaceBooK : https://www.facebook.com/Makerbase.mks/
Makerbase

Sheet: /DRIVER/
File: DRIVER.sch

Title: LS ESP32 PRO

Size: A3	Date: 2023-11-21	**Rev: V2.1_002**
KiCad E.D.A. kicad (5.1.10)-1		Id: 9/9