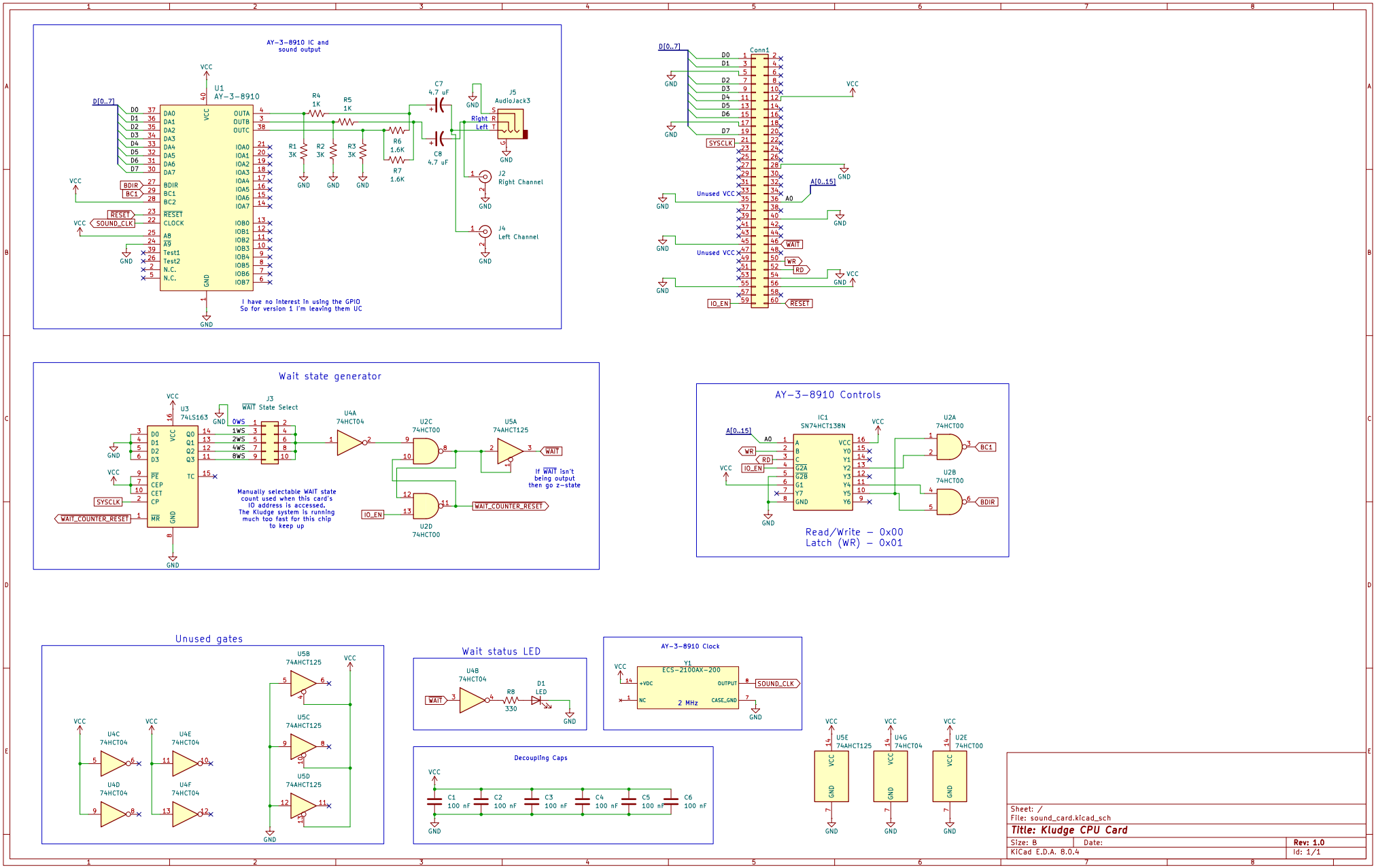
AY-3-8910 IC and sound output
U1
AY-3-8910
D[0..7]
BDIR
BC1
RESET
SOUND_CLK
R1 3K
R2 3K
R3 3K
R4 1K
R5 1K
R6 1.6K
R7 1.6K
C7 4.7 uF
C8 4.7 uF
J5
AudioJack3
Right
Left
J2
Right Channel
J4
Left Channel
I have no interest in using the GPIO
So for version 1 I'm leaving them UC
Conn1
Unused VCC
A[0..15]
WAIT
WR
RD
IO_EN
Wait state generator
U3
74LS163
J3
WAIT State Select
0WS
1WS
2WS
4WS
8WS
U4A
74HCT04
U2C
74HCT00
U5A
74AHCT125
U2D
74HCT00
SYSCLK
WAIT_COUNTER_RESET
Manually selectable WAIT state count used when this card's IO address is accessed. The Kludge system is running much too fast for this chip to keep up
If WAIT isn't being output then go z-state
AY-3-8910 Controls
IC1
SN74HCT138N
U2A
74HCT00
U2B
74HCT00
BC1
BDIR
Read/Write - 0x00
Latch (WR) - 0x01
Unused gates
U4C
74HCT04
U4D
74HCT04
U4E
74HCT04
U4F
74HCT04
U5B
74AHCT125
U5C
74AHCT125
U5D
74AHCT125
Wait status LED
U4B
74HCT04
R8
330
D1
LED
AY-3-8910 Clock
Y1
ECS-2100AX-200
2 MHz
Decoupling Caps
C1 100 nF
C2 100 nF
C3 100 nF
C4 100 nF
C5 100 nF
C6 100 nF
U5E
74AHCT125
U4G
74HCT04
U2E
74HCT00
Sheet: /
File: sound_card.kicad_sch
Title: Kludge CPU Card
Size: B
Date:
Rev: 1.0
KiCad E.D.A. 8.0.4
Id: 1/1