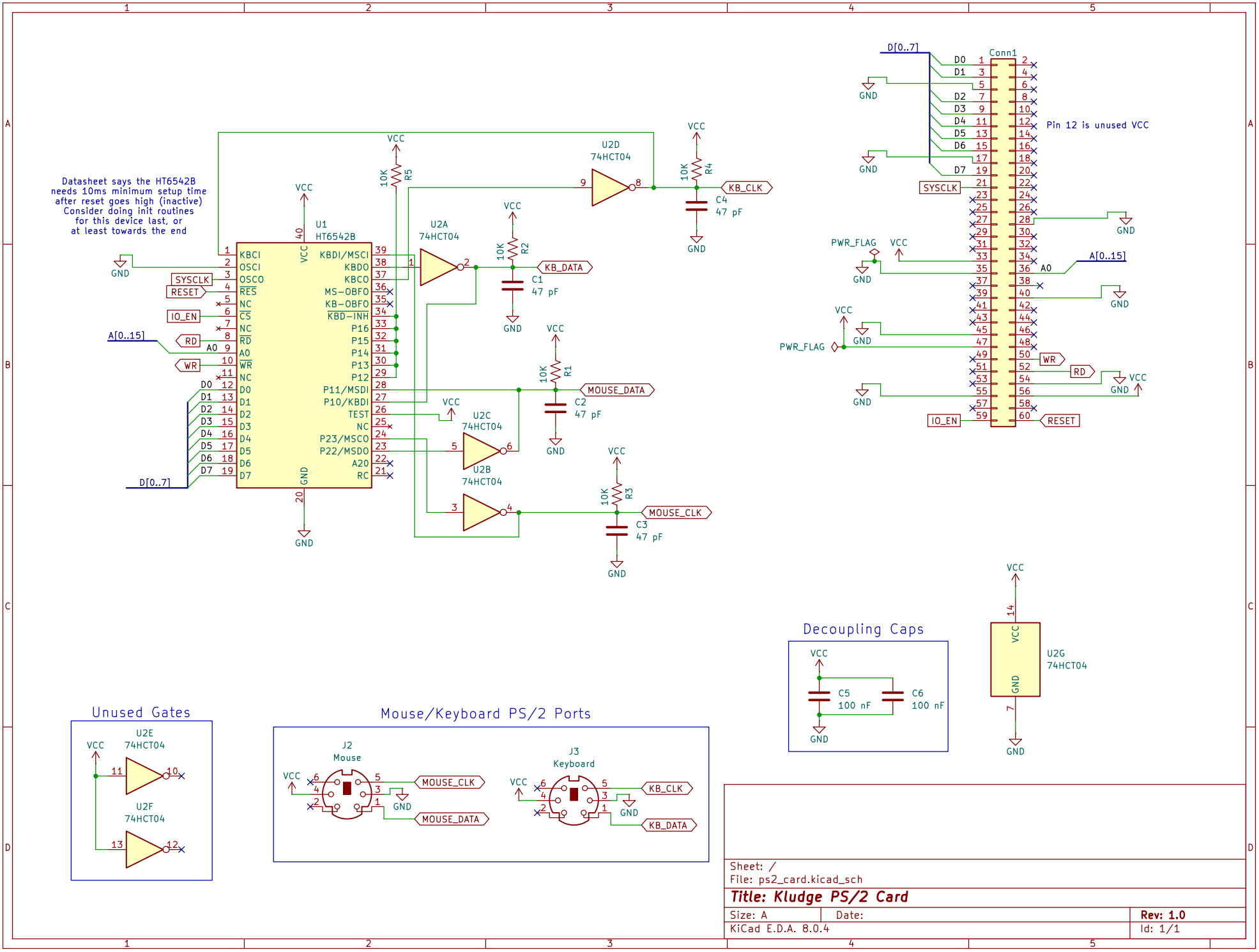

Sheet: /
File: ps2_card.kicad_sch

Title: Kludge PS/2 Card

Size: A	Date:	Rev: 1.0
KiCad E.D.A. 8.0.4		Id: 1/1