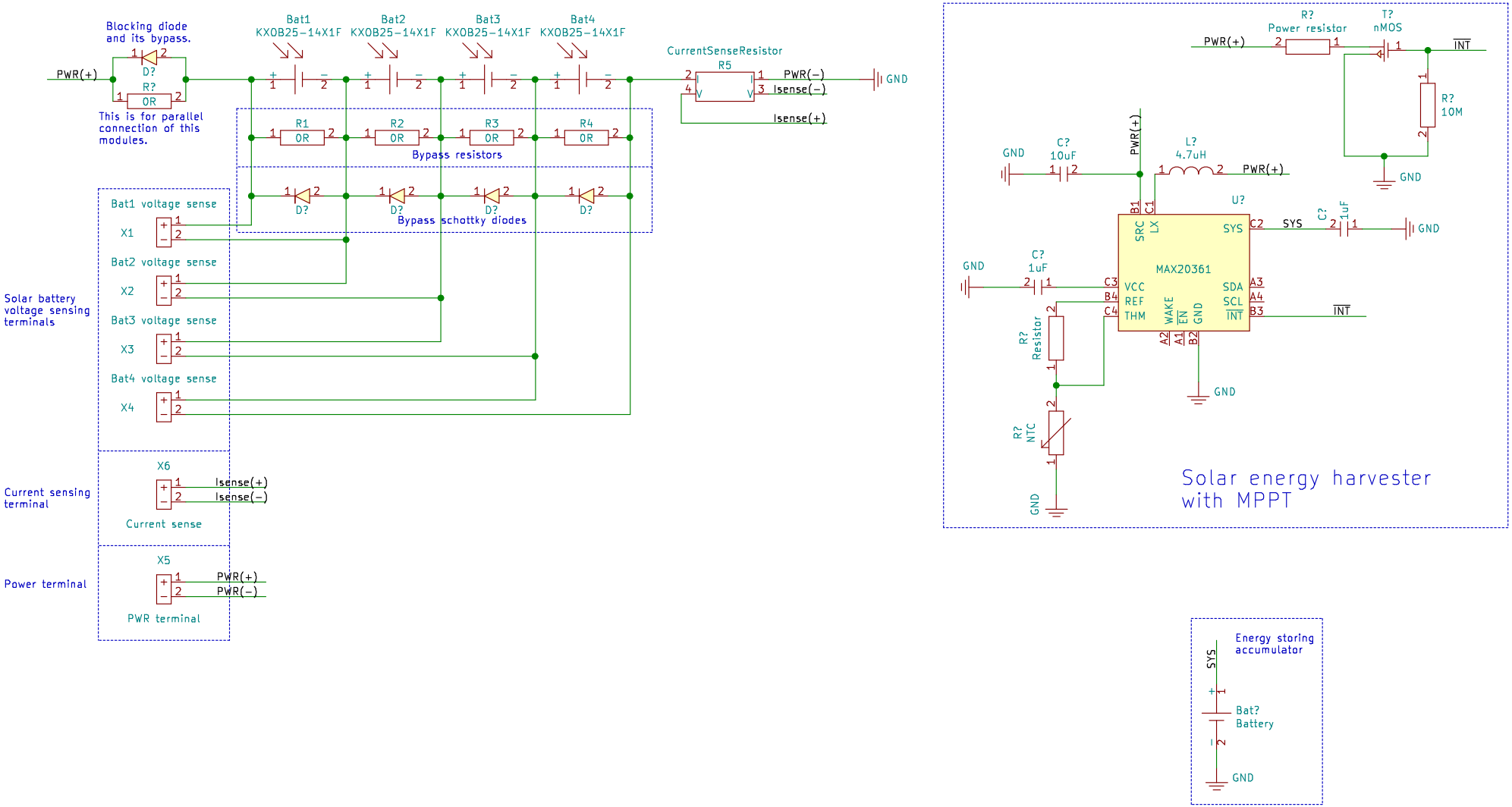

Shpakov Dmitry

Sheet: /
File: SolarCell.sch

Title: Solar energy cell

Size: A4	Date: 2020-11-08	**Rev: r1**
KiCad E.D.A. kicad 5.1.8		Id: 1/1