Ergonomic Mouse

Project 3: Power In Community

Thurs-02
Emilia Vieira (vieire8)
Hao Yan (yanh58)
Shreyash Dharia (dharias)
Amber Li (li4371)
Sherry Zhao (zhaot75)

Objectives
Easy to use
Relatively low Cost
Safe to Use
Versatile
Comfortable
Reliable
Relatively Small Size
Constraint
Durable

Problem Statement

Creating an alternative interface for Mark to edit his books without experiencing pain and fatigue due to limited finger mobility

Device Description

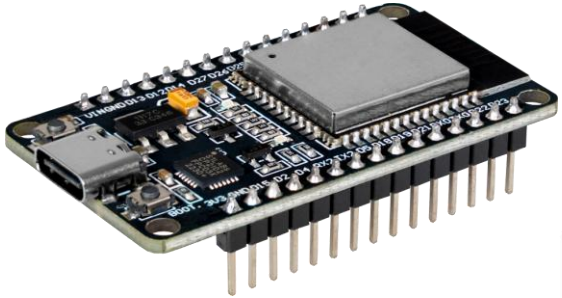

Fig.1. Esp-32 [1]

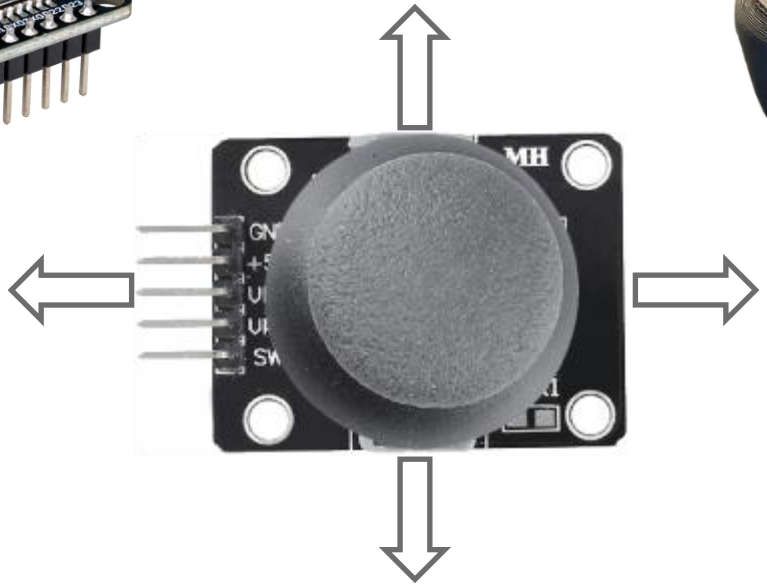

Fig.2. Joystick [2]

How To Use?

Fig.3. Standard Mouse [3]

Existing Solutions

Mouses on The Market

- Hippus M2WB-LC Wired Light Click HandShoe Mouse: **$190.56** [4]
- Logitech MX Vertical Wireless Mouse: **$99.98** [5]

Fig.4. Hippus M2WB-LC Wired Light Click HandShoe Mouse [4]

Fig.5. Logitech MX Vertical Wireless Mouse **[5]**

Text Editing Software

- Monthly Price of a Grammarly Premium Subscription: **$40.00** [6]

Fig.6. Grammarly logo [6]

Our Solution

- Total cost of parts and printing: **$48.00**

Electronic Hardware Components

Arduino

- Used in 1st Prototype
- Needed to be connected to a computer

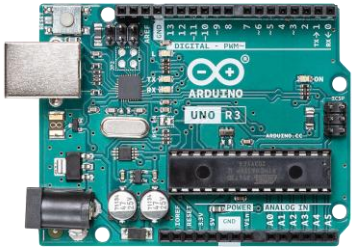

Fig.7. Arduino Uno [7]

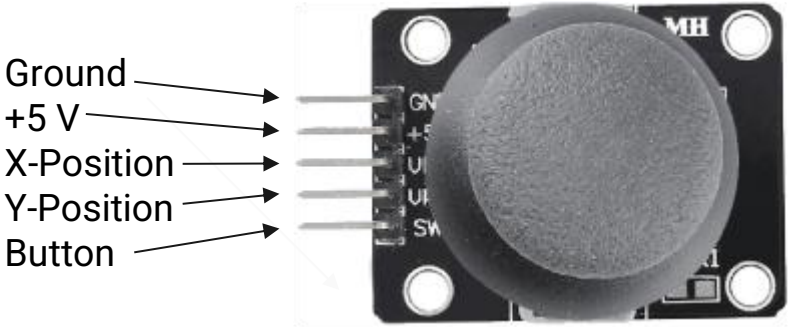

Fig.2. Joystick [2]

ESP-32

- Used in 2nd and the final prototype
- Wireless, Uses Bluetooth for operation

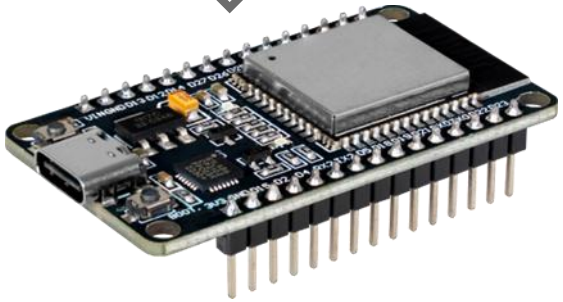

Fig.1. Esp-32 [1]

Fig.8. Large Buttons [8]

High Level Architecture

- Three layers of input
- ESP32 MCU converts these signals into keyboard functionality
- Keyboard functionality controls cursor
(ARROWS) and SELECT and DELETE mode

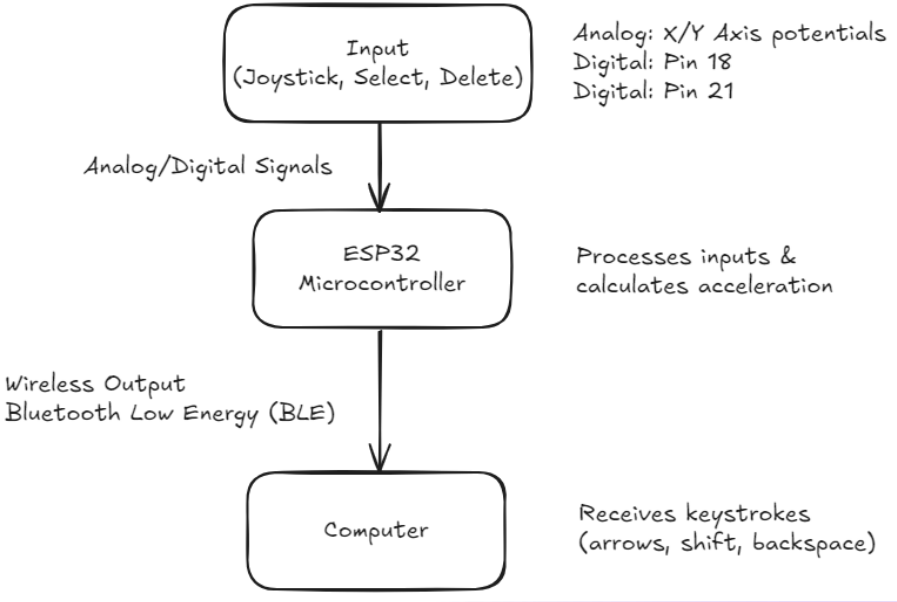

Fig.9. High level Architecture Pipeline

ESP32 Pinout and Advantages

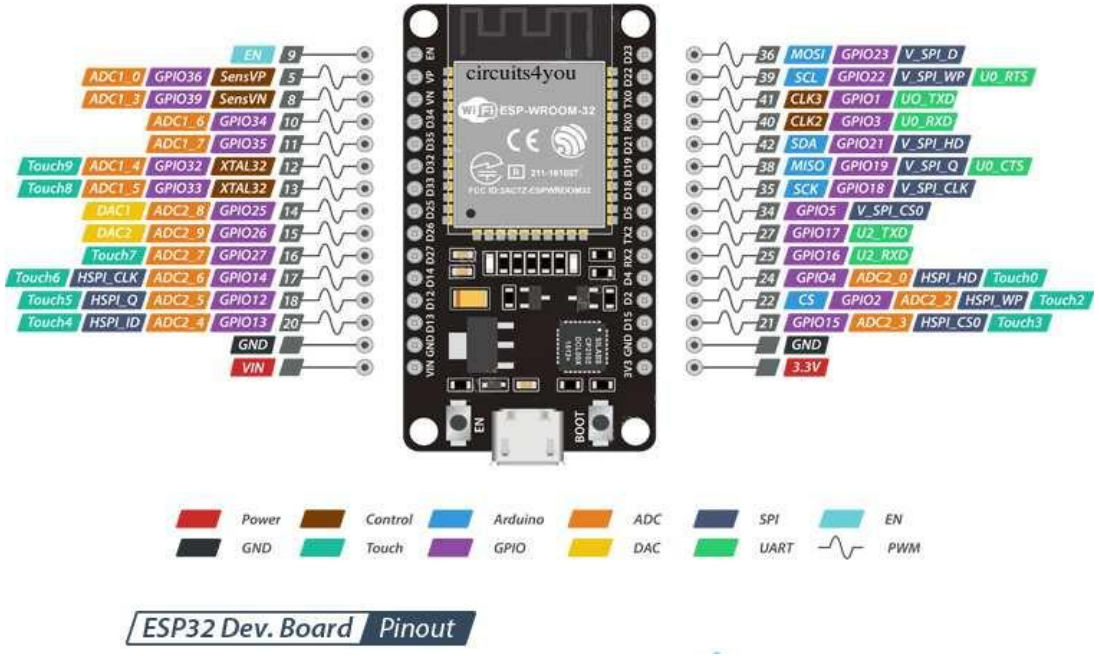

Fig.10. ESP32 Pinout Diagram [9]

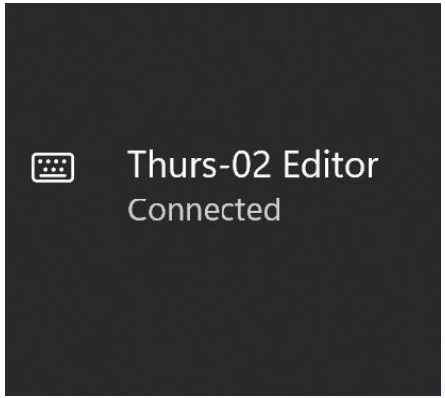

Fig.11. Bluetooth Connection as a Keyboard

Code Flow Logic

- Buttons (Digital)
  - ON or OFF
  - For toggling SELECT and DELETE mode
- Joystick (Analog)
  - X values ranging from 0 to 4000
  - Y values ranging from 0 to 4000
  - Set these potentials into intervals for LEFT/RIGHT/UP/DOWN
- Acceleration controller
  - Logarithmic determined to speed up the cursor the longer
    it is held down in a direction
- Multi-modal logic
  - DELETE operates on SELECT state

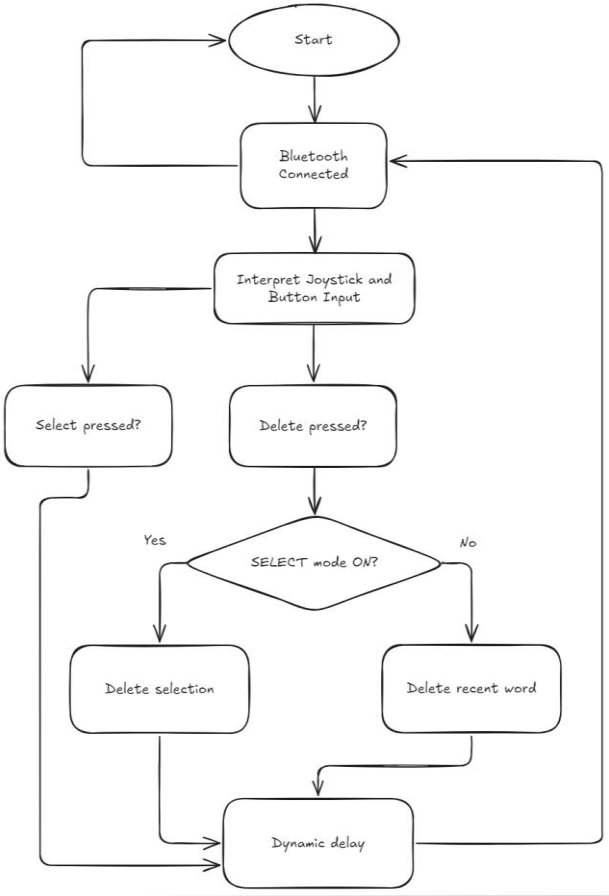

Fig.12. Flowchart for Code

Iteration

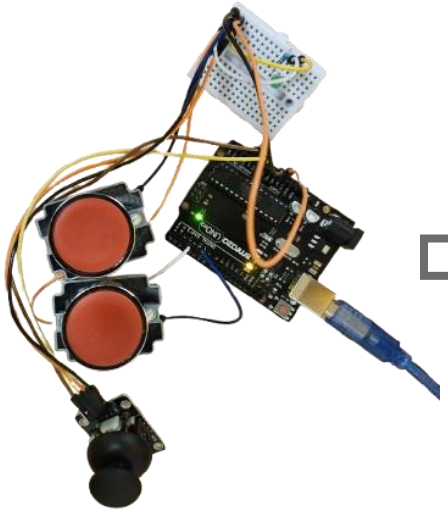

1st Prototype

2nd Prototype

3rd Prototype

Durable Mouse Box

Bill of Materials	
3D printed parts	$20
Buttons	$12
Joystick	$8
Arduino	$8
Borrowed:	
Breadboard	$0
Wires	$0

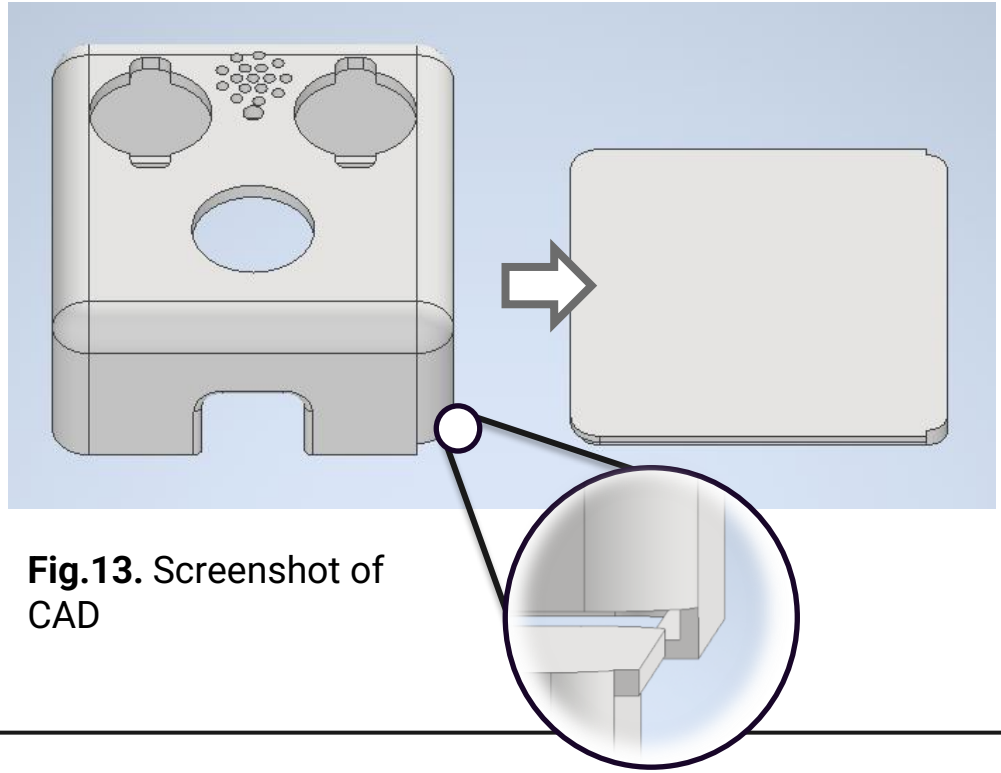

Fig.13. Screenshot of CAD

3D Components

Slanted base

- Extrusion for attachment

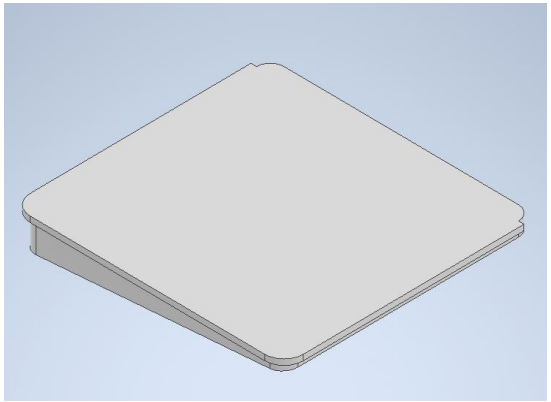

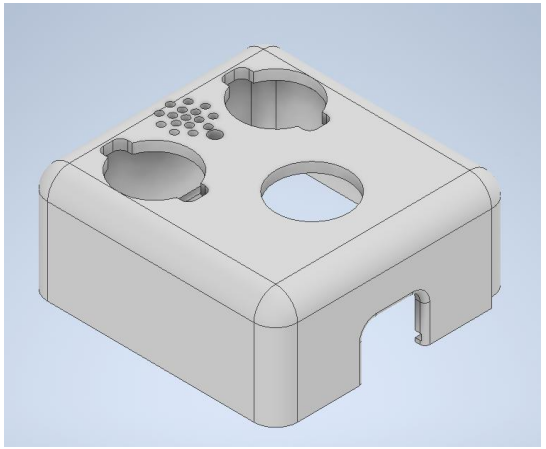

Hollow cover

- Rounded edges

Button extenders

- Rounded tops

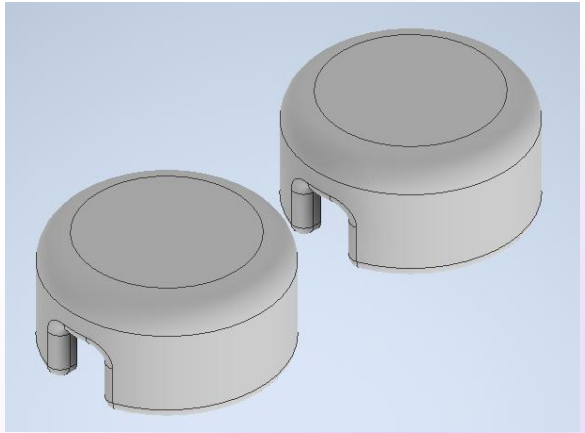

Survey Results

Second Prototype
(5 People Surveyed)

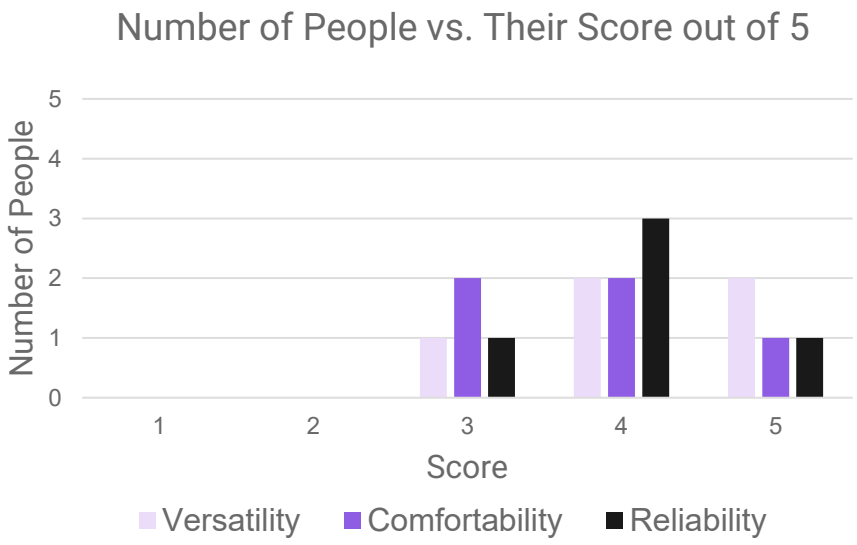

Final Prototype
(10 People Surveyed)

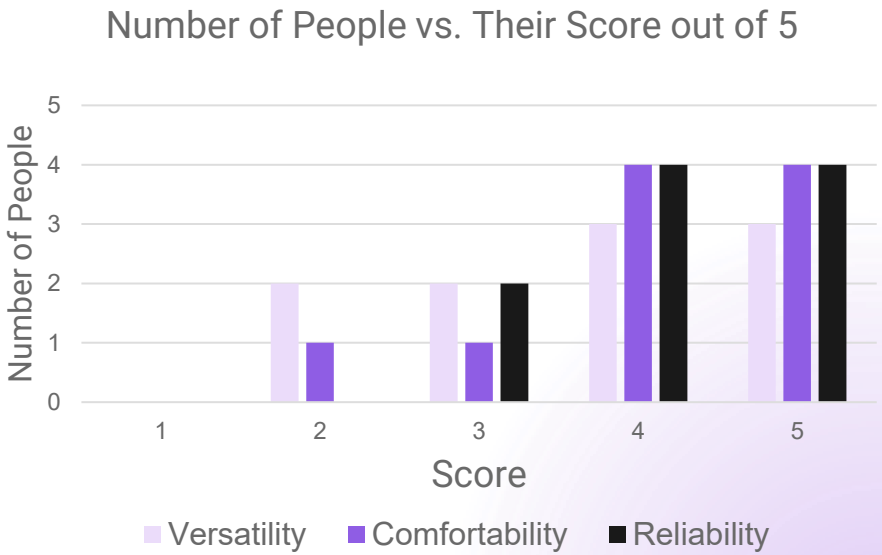

Product Demonstration

Thanks!

Any Questions?

References

[1] “NodeMCU ESP32-C,” Joy-It, 2024. https://joy-it.net/en/products/SBC-NodeMCU-ESP32-C (accessed Mar. 31, 2026). [Online]

[2] “2.15 GAME - Star-Crossed,” Sunfounder, 2025. https://docs.sunfounder.com/projects/3in1-kit/en/latest/pictoblox/15_star_crossed.html (accessed Mar. 31, 2026). [Online]

[3] “Lenovo Select Wireless Basic Mouse,” Lenovo, 2026. https://www.lenovo.com/ca/en/p/accessories-and-software/keyboards-and-mice/mice/gy51f14319 (accessed Mar. 31, 2026).

[4] “Hippus M2WB-LC wired light click HandShoe mouse (right hand, medium, black) : Amazon.ca: Electronics,” Hippus M2WB-LC Wired Light Click HandShoe Mouse (Right Hand, Medium, Black) : Amazon.ca: Electronics, https://www.amazon.ca/dp/B006TZNBUG?psc=1&th=1&linkCode=gg2&tag=graywithgrace-20 (accessed Mar. 31, 2026). [Online]

[5] “Logitech MX Vertical Ergonomic Wireless rechargeable mouse,” Logitech MX Vertical Ergonomic Wireless Rechargeable Mouse, https://www.amazon.ca/dp/B07FNJB8TT?psc=1&th=1&linkCode=gg2&tag=graywithgrace-20 (accessed Mar. 31, 2026). [Online]

References (Page 2)

[6] “Grammarly,” *Grammarly.com*, 2025. https://www.grammarly.com/upgrade/pro/try (accessed Mar. 12, 2026).[Online]

[7] “Arduino Uno R3 Hardware Overview,” Arduino Uno R3 - Board Layout, Pinout, I/O, Power, and Specifications, https://datacapturecontrol.com/articles/io-devices/microcontrollers/arduino-uno-r3 (accessed Mar. 31, 2026). [Online]

[8] “Gebildet 2pcs 1 nc 22mm momentary push button switch SPST red 660V 10A,” Amazon.ca: Tools & Home Improvement, https://www.amazon.ca/dp/B0D75M5HC2/ref=sspa_dk_detail_4?psc=1&pd_rd_i=B0D75M5HC2&pd_rd_w=QyFfR&content-id=amzn1.sym.516c2169-755e-413a-a38a-68230f4ab66f&pf_rd_p=516c2169-755e-413a-a38a-68230f4ab66f&pf_rd_r=V3BGM4KTV4D3HGGSFVMG&pd_rd_wg=9LNmY&pd_rd_r=22d3715e-fee8-41d0-89c3-ba8cb67c429a&sp_csd=d2lkZ2V0TmFtZT1zcF9kZXRhaWw (accessed Mar. 31, 2026). [Online]

[9] Last Minute ENGINEERS, “ESP32 Pinout Reference,” Last Minute Engineers, Feb. 05, 2022. https://lastminuteengineers.com/esp32-pinout-reference/ (accessed Mar. 31, 2026). [Online]