CONTENT

1. BASICS OF ENGINEERING DRAWING ..... 17 - 36

1.1 Introduction 17
1.2 Drawing Instruments 17
1.3 Exercise 23
1.4 Types of Lines and Their Applications 24
1.5 Lettering 26
1.6 Scales 27
1.7 Dimensioning 28
1.7.1 System of Dimensioning 29
1.7.2 Basic Principles in Dimensioning 30
1.8 Geometrical Constructions 35

2. ENGINEERING CURVES ..... 37 - 56

2.1 Introduction 37
2.2 Cycloidal Curves 37
2.2.1 Cycloid 37
2.3 Involute 43
2.4 Helix 53
2.5 Exercise 55

3. CONCEPT OF PROJECTIONS ..... 57 - 65

3.1 Introduction 57
3.2 Projection 57
3.2.1 Projection of an Object 57
3.3 Orthographic Projection 58
3.3.1 Principal Views and Principal Planes of Projection .. 58
3.4 System of Orthographic Projection 59
3.4.1 First Angle Projection Method 60
3.4.2 Third Angle Projection Method 62
3.5 Symbols for Method of Projections 65

4. ORTHOGRAPHIC PROJECTIONS ..... 66 - 98

4.1 Procedure for Preparing Orthographic Projections 66
4.2 Elementary Solved Problems 67
4.3 Exercise I 69
4.4 Solved Problems 70
4.5 Exercise II 91
4.6 Exercise III 96
4.7 Exercise IV 98

Scanned by CamScanner

5. SECTIONAL ORTHOGRAPHIC PROJECTIONS ..... 99 - 159
5.1 Introduction 99
5.2 Types of Sectional View 100
5.3 Different Types of Holes 107
5.4 Solved Problems 108
5.5 Exercise 153

6. ISOMETRIC PROJECTIONS ..... 160 - 205
6.1 Introduction 160
6.2 Types of Pictorial Drawing 160
6.3 Types of Axonometric Projection 161
6.4 Orthographic Isometric Projection of Cube 162
6.5 Isometric Length 162
6.6 Isonomial Projections 163
6.7 Isometric Axes, Lines and Planes 164
6.8 Construction of Isometric Point 165
6.9 Construction of Isometric Plane 165
6.10 Construction of Isometric Solid 166
6.11 Isometric Projection of a Circle 167
6.12 Isometric Cylinder 169
6.13 Isometric Semi-Cylinder 170
6.14 Arc of Circle in Isometric Projection 172
6.15 Placing of Two Blocks with Different Base in Contact 173
6.16 Object Having More Surfaces 174
6.17 Solved Problems 175
6.18 Exercise 201

7. PROJECTIONS OF POINTS ..... 206 - 215
7.1 Introduction 206
7.2 Position of Point 206
7.3 Position of Point in First Quadrant 206
7.4 Position of Point in Second Quadrant 207
7.5 Position of Point in Third Quadrant 208
7.6 Position of Point in Fourth Quadrant 209
7.7 Position of Point on/in the H.P. and in Front of the V.P. 210
7.8 Position of Point on/in the H.P. and Behind the V.P. 210
7.9 Position of Point on/in the V.P. and Above the H.P. 211
7.10 Position of Point on/in the V.P. and Below the H.P. 211
7.11 Position of Point on the H.P. and the V.P. 212
7.12 Position of Point in Four Quadrants 212
7.13 Orthographic Projection of a Point on Three Principal Planes 213

Scanned by CamScanner

7.14 Methodical Approach 213
7.15 Exercise 214

8. PROJECTIONS OF STRAIGHT LINES ..... 216 - 262

8.1 Introduction 216
8.2 Line Parallel to Two Principal Planes and Perpendicular to the Third 216
8.2.1 Line Parallel to the H.P. and V.P. and Perpendicular to the Profile Plane 216
8.2.2 Line Parallel to the V.P. and P.P. and Perpendicular to the H.P. 217
8.2.3 Line Parallel to the H.P. and P.P. and Perpendicular to the V.P. 218
8.3 Line Parallel to One Principal Plane and Inclined to the Other 220
8.3.1 Line Parallel to the V.P. and Inclined to the H.P and P.P. 220
8.3.2 Line Parallel to the H.P. and Inclined to the V.P and P.P. 221
8.3.3 Line Parallel to the P.P. and Inclined to the H.P and V.P. 222
8.3.4 Line is in the V.P. and Inclined At an Angle θ to the H.P. 223
8.3.5 Line is in the H.P and Inclined At an Angle ϕ to the V.P. 224
8.4 Oblique Line 225
8.4.1 Notation Used 225
8.4.2 Case (i) : Line Parallel to the V.P and Inclined to the H.P. At an Angle θ 225
8.4.3 Case (ii) : Line Parallel to the H.P. and Inclined to the V.P. At an Angle ϕ 227
8.5 Exercise 260

9. PROJECTIONS OF PLANES ..... 263 - 286

9.1 Introduction 263
9.2 Traces of Plane 263
9.3 Surface of Plane Parallel to One Principal Plane and Perpendicular to Other Two 264
9.3.1 Surface of Plane Parallel to H.P. and Perpendicular to V.P. and P.P. 264
9.3.2 Surface of Plane Parallel to V.P. and Perpendicular to H.P. and P.P. 265
9.3.3 Surface of Plane Parallel to P.P. and Perpendicular to H.P. and V.P. 266
9.4 Surface of Plane Perpendicular to One Principal Plane and Inclined to Other Two ... 267
9.4.1 Surface of Plane Inclined to H.P. at an Angle θ_s and Perpendicular to V.P. ... 267
9.4.2 Surface of Plane Inclined to H.P. at an Angle θ_s Which Shows Apparent Shape as a Required Shape and Plane Perpendicular to V.P. with One of the Side of a Plane Resting in H.P. 269
9.4.3 Surface of Plane Inclined to H.P. at an Angle θ_s and Perpendicular to V.P. with One of a Edge of a Plane Resting in H.P. 270
9.4.4 Surface of Plane Inclined to H.P. at an Angle θ_s and Perpendicular to V.P. with One of the Corner of a Plane Resting in H.P. 271
9.4.5 Surface of Plane Inclined to V.P. at an Angle ϕ_s and Perpendicular to H.P. ... 272
9.4.6 Surface of Plane Inclined to V.P. at an Angle ϕ_s and Perpendicular to H.P. with One of the Edge of a Plane Resting in V.P. 273
9.4.7 Surface of Plane Inclined to V.P. at an Angle ϕ_s and Perpendicular to H.P. with One of the Corner of a Plane Resting in V.P. 274

Scanned by CamScanner

9.5 Solved Problems 280
9.6 Exercise 286

10. PROJECTIONS OF SOLIDS ..... 287 - 357

10.1 Introduction 287
10.2 Classification of Solids 287
10.2.1 Polyhedron 287
10.2.1 [A] Prism 287
10.2.1 [B] Pyramids 289
10.2.2 Solids of Revolution 290
10.2.2 [A] Cylinder 290
10.2.2 [B] Cone 291
10.2.2 [C] Sphere 292
10.3 Axis of Solid Parallel to Two Principal Plane and Perpendicular to Third 292
10.3.1 Axis of Solid Perpendicular to the H.P. and Parallel to the V.P. 292
10.3.2 Axis of Solid Perpendicular to the V.P. and Parallel to the H.P. 296
10.3.3 Axis of Solid Perpendicular to the H.P. and V.P and Perpendicular to the P.P. 298
10.4 Axis of Solid is Directly/Indirectly Inclined to the H.P At an Angle θ and Parallel to the V.P. 299
10.5 Axis of Solid is Directly/Indirectly Inclined to the V.P At an Angle ϕ and Parallel to the H.P. 307
10.6 Oblique 310
10.6.1 Solid Resting on One of its Side of Base on the H.P. which is Inclined to the V.P. and the Axis of a Solid is Directly or Indirectly Inclined to the H.P. 310
10.6.2 Axis of the Solid is Directly or Indirectly Inclined to the H.P. and T.V. of the Axis is Inclined to the V.P. 312
10.6.3 Axis of the Solid is Directly or Indirectly Inclined to the H.P. and Axis is Inclined to the V.P. 314
10.6.4 Solid Resting on One of its Side of Base on the V.P. which is Inclined to the H.P. and the Axis of the Solid is Directly or Indirectly Inclined to the V.P. 315
10.6.5 Axis of the Solid is Directly or Indirectly Inclined to the V.P. and F.V. of the Axis is Inclined to the H.P. 316
10.6.6 Axis of the Solid is Directly or Indirectly Inclined to the V.P. and Axis is Inclined to the H.P. 317
10.7 Exercise 353

11. SECTIONS OF SOLIDS ..... 358 - 432

11.1 Introduction 358
11.2 Projection of Sectional View 358
11.3 Types of Section Plane 359
11.3.1 Section Plane Perpendicular to V.P. and Parallel to H.P. 359
11.3.2 Section Plane Perpendicular to H.P. and Parallel to V.P. 360
11.3.3 Section Plane Perpendicular to V.P. and Inclined to H.P. 360

Scanned by CamScanner

11.3.4 Section Plane Perpendicular to H.P. and Inclined to V.P. 361
11.3.5 Section Plane Perpendicular to Both H.P. and V.P. 361
11.4 Solved Problems I 362
11.5 Solved Problems II 413
11.6 Exercise 425
Critical Problems 432

12. DEVELOPMENT OF SURFACES ..... 433 - 497

12.1 Introduction 433
12.2 Application of Development of Surfaces in Engineering Products 433
12.3 Methods of Development 433
12.3.1 Parallel Line Method 433
12.3.2 Radial Line Method 434
12.4 Concept of Points and Lines 434
12.5 Development of Prism 437
12.6 Development of Cylinder 444
12.7 Development of Pyramid 447
12.8 Development of Cone 445
12.9 Solved Problems on Section Cum Development of Surfaces 469
12.10 Exercise 488

13. READING ORTHOGRAPHIC PROJECTIONS ..... 498 - 529

13.1 Introduction to Reading Orthographic Projections 498
13.2 Elementary Solved Problems 499
13.3 Basic Exercise to Develop the Imagination for Missing View 501
13.4 Possibility of More than One Solution for Given Two Views 504
13.5 Solved Problems 506
13.6 Exercise 525

14. INTRODUCTION TO COMPUTER 2-D DRAFTING ..... 530 - 558

14.1 Introduction 530
14.2 Advantages of Computer Aided Drafting 530
14.3 CADr Software 531
14.4 About AutoCAD 531
14.4.1 Using the Windows Toolbar Option 531
14.4.2 Using Command Line Option 531
14.5 Solved Problems 554

Appendix A - SOLUTIONS TO SELECTED EXERCISE ..... 559 - 571

References 572

UNIVERSITY PAPER SOLUTIONS

Scanned by CamScanner

Introduction to Engineering Drawing

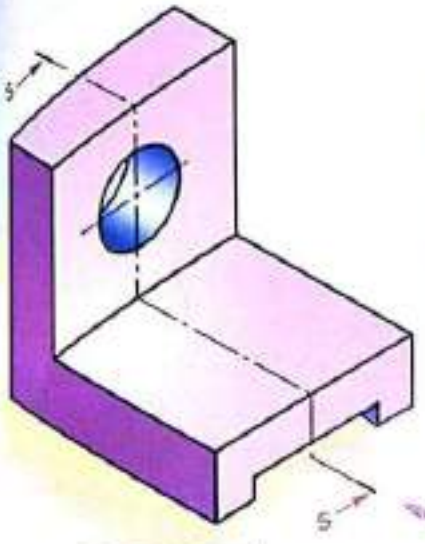

Pictorial View

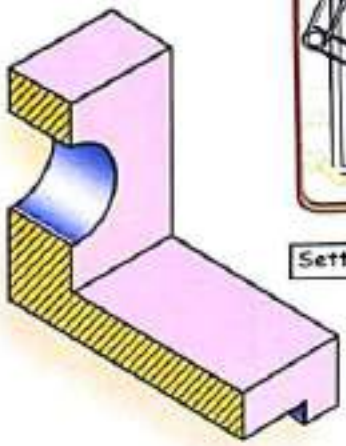

Sectional View

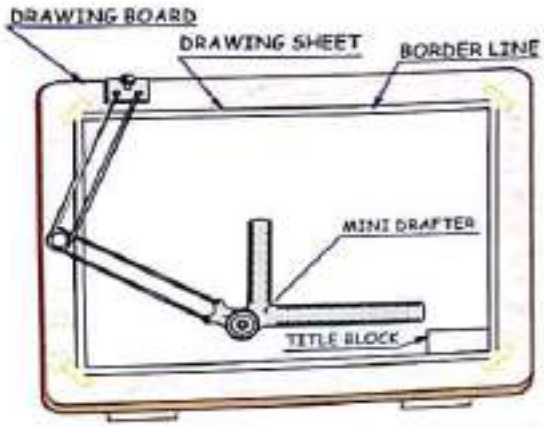

Setting of Mini-Drafter and Drawing Sheet

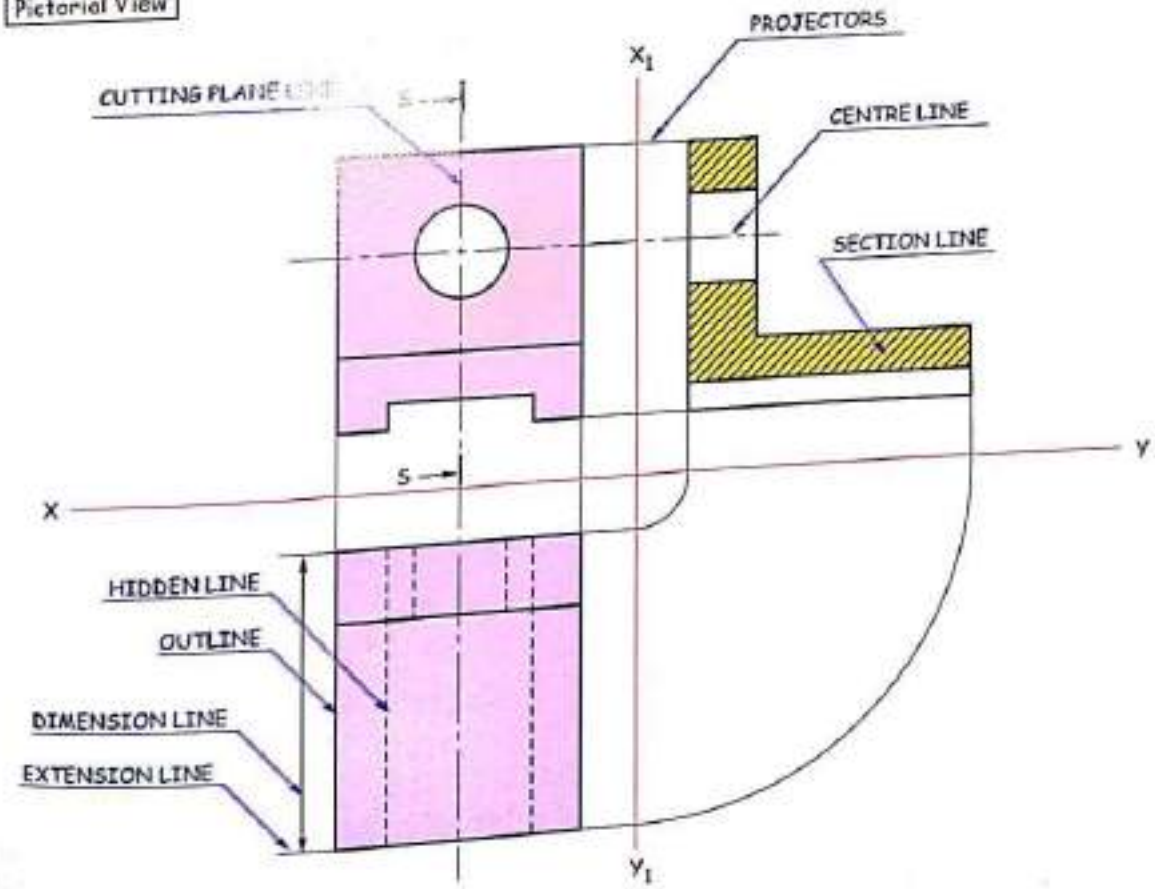

Orthographic View

Scanned by CamScanner

PROJECTIONS OF STRAIGHT LINES

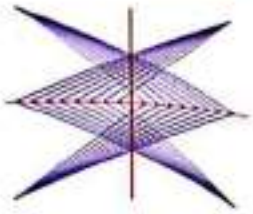

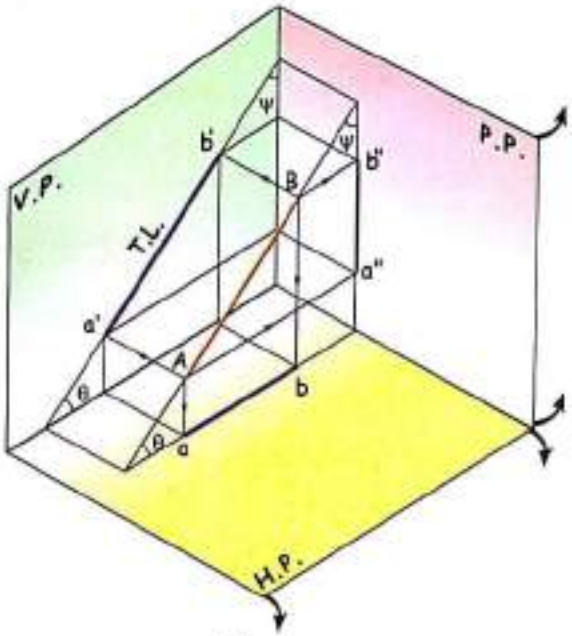

(a)

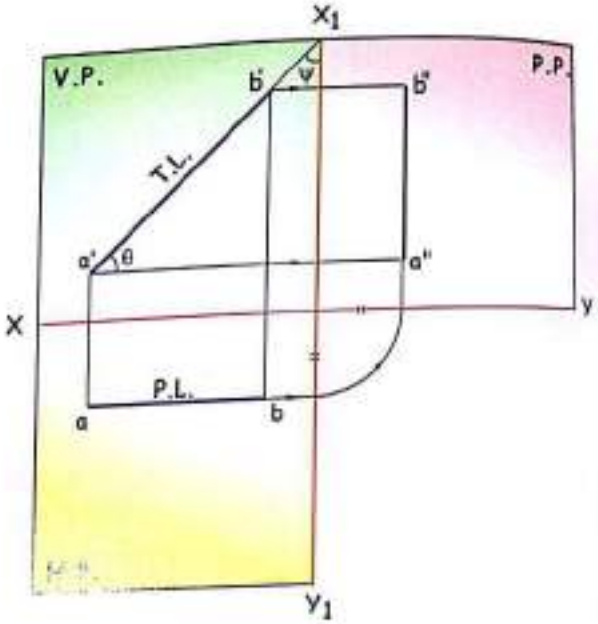

(b)

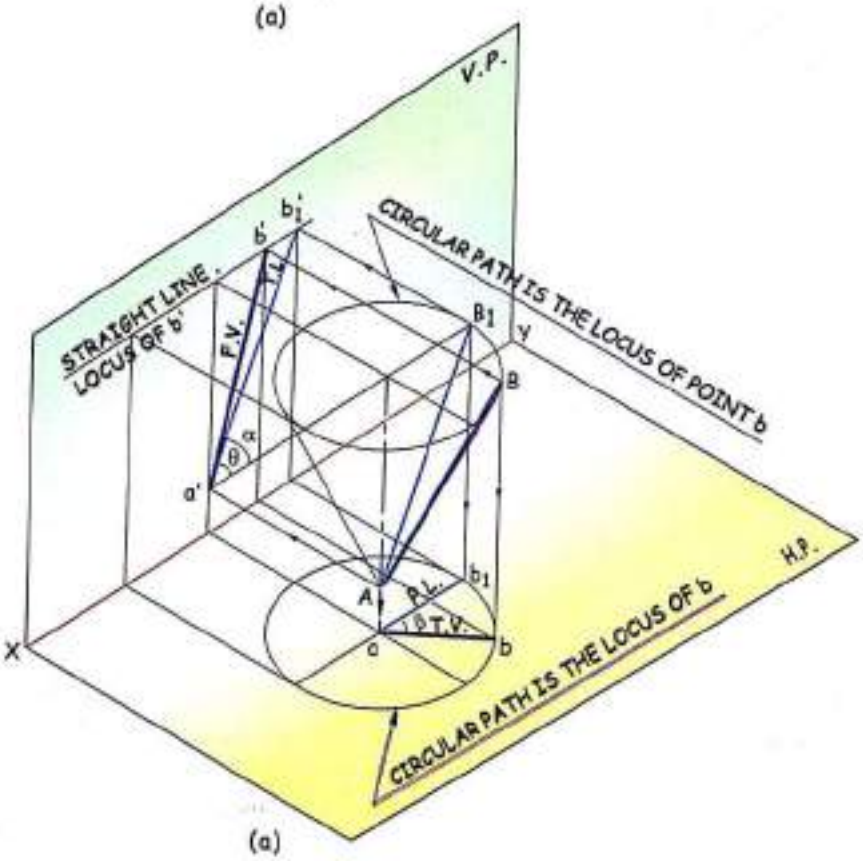

(a)

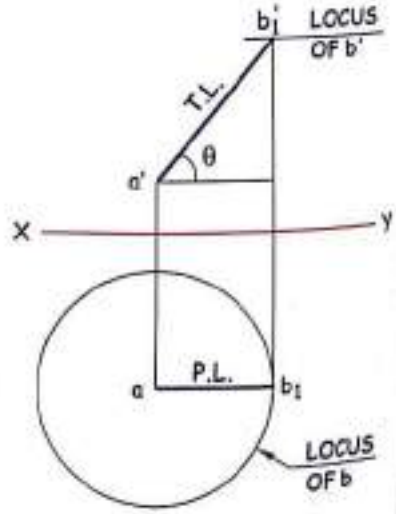

(b)

Scanned by CamScanner

PROJECTIONS OF SOLIDS

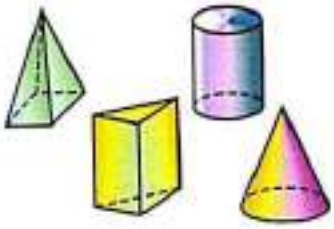

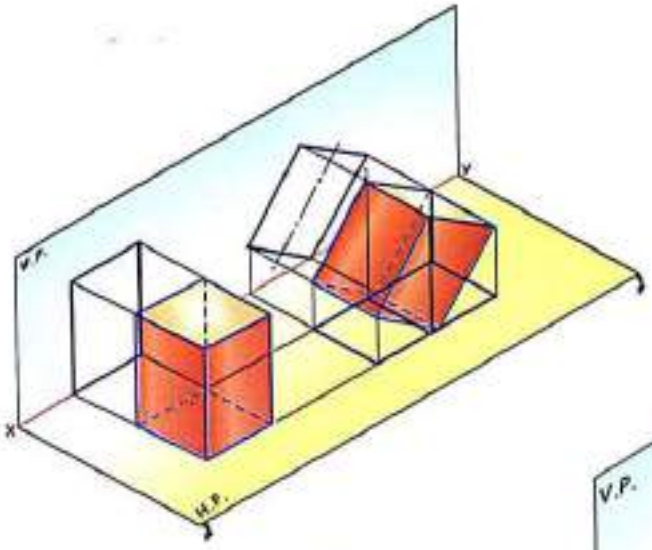

A Square Prism

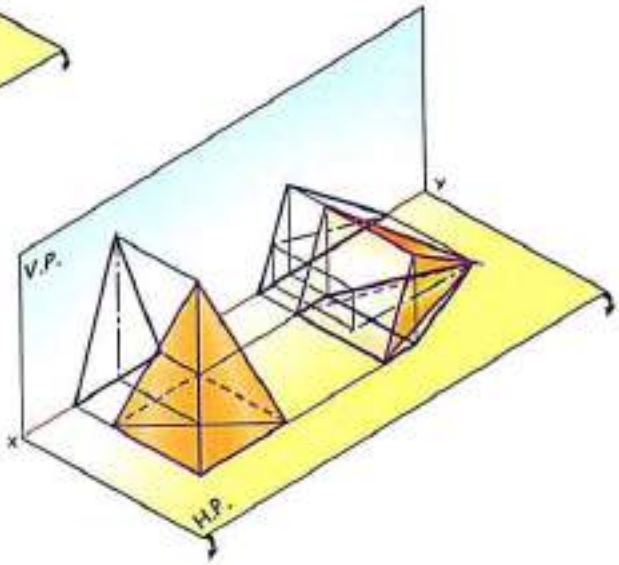

A Square Pyramid

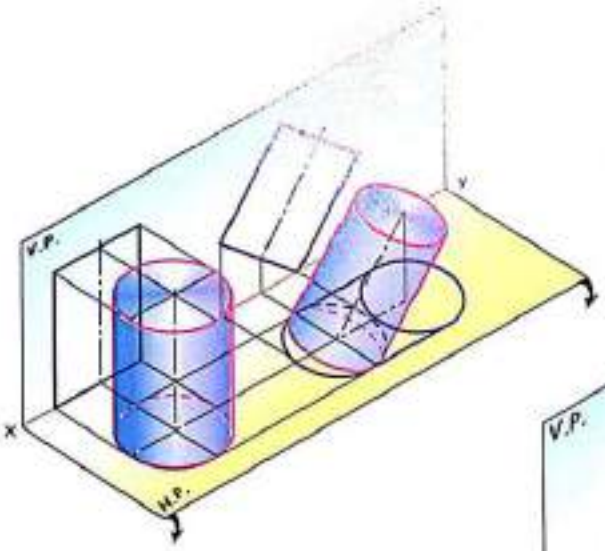

A Right Circular Cylinder

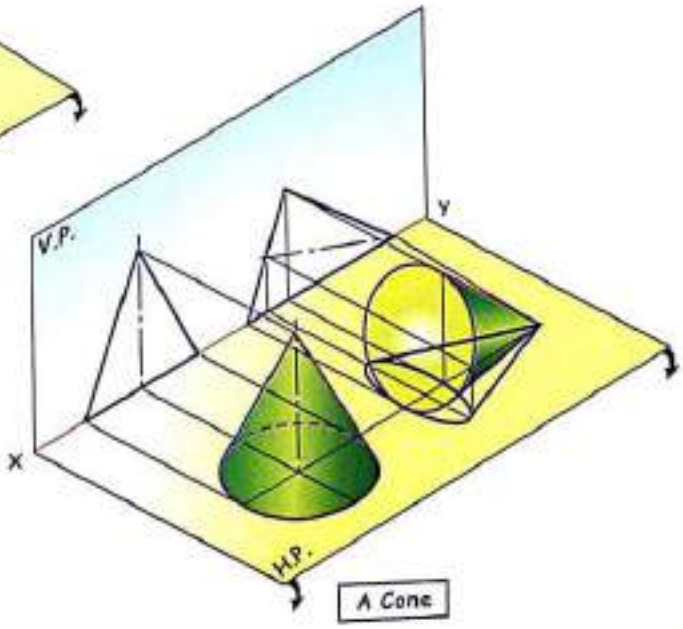

A Cone

Scanned by CamScanner

SECTIONS OF SOLIDS

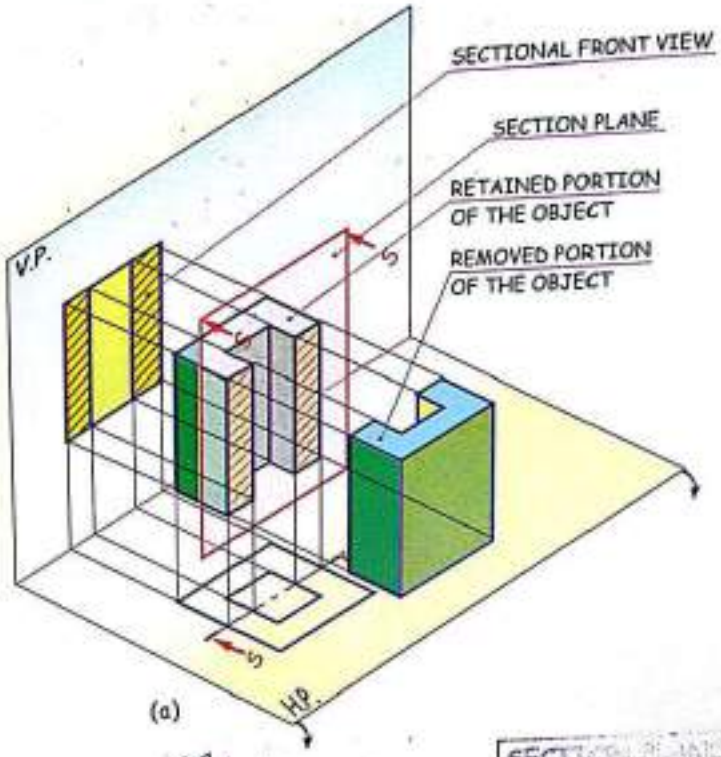

(a)

Sectional F.V.

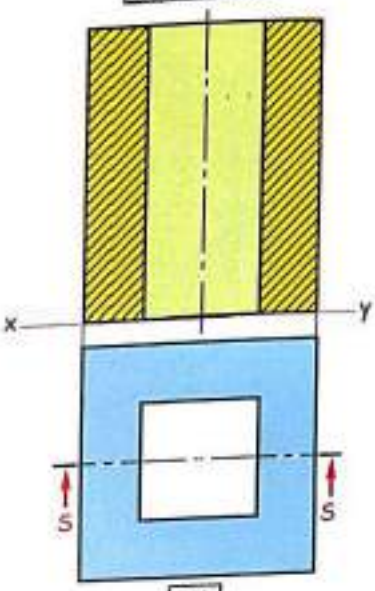

(b) T.V.

SECTIONAL PLANE

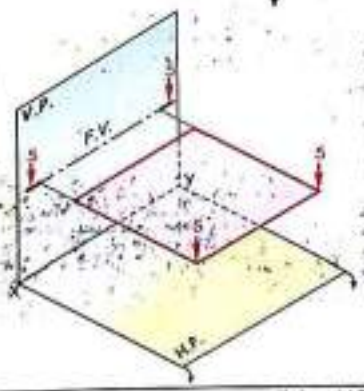

Perpendicular to V.P. and Parallel to H.P.

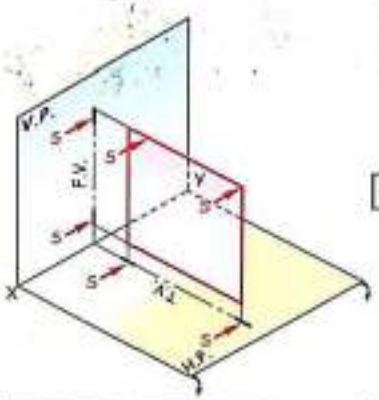

Perpendicular to Both H.P. and V.P.

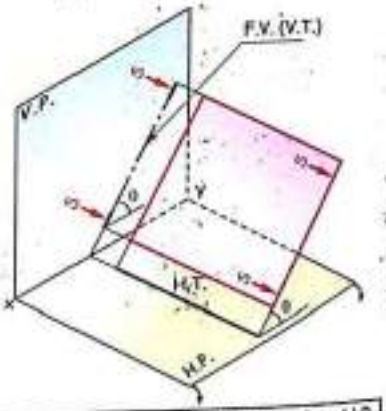

Perpendicular to V.P. and Inclined to H.P.

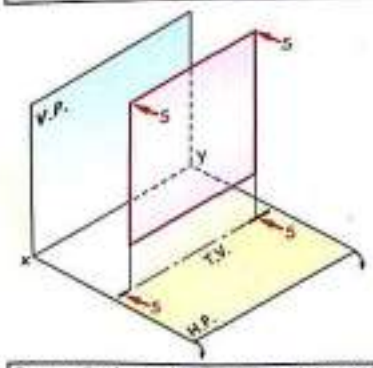

Perpendicular to H.P. and Parallel to V.P.

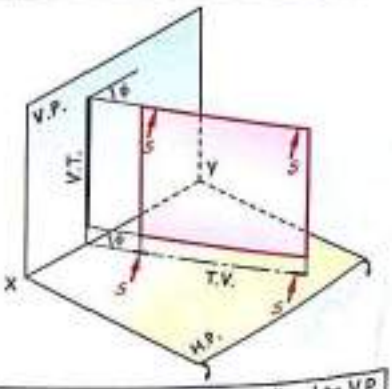

Perpendicular to H.P. and Inclined to V.P.

Scanned by CamScanner

Orthographic Projections

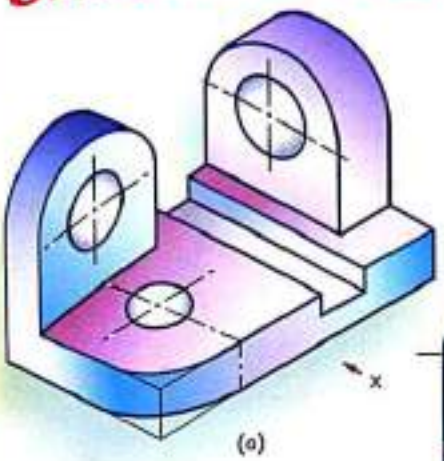

(a)

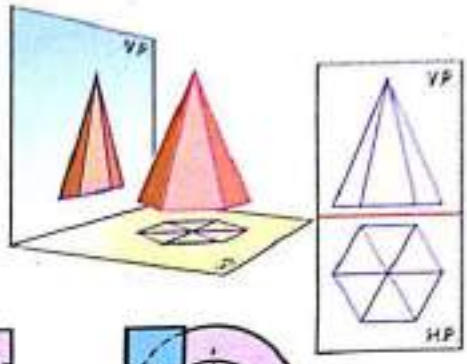

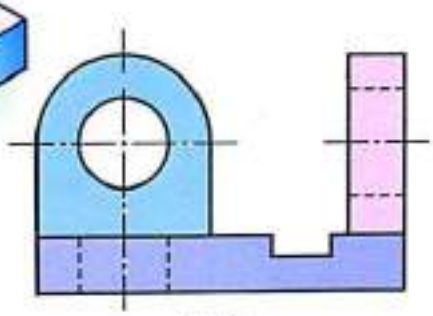

F.V.

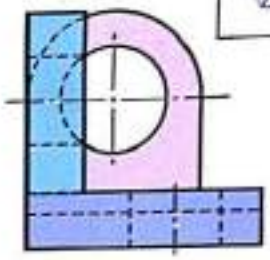

L.H.S.V.

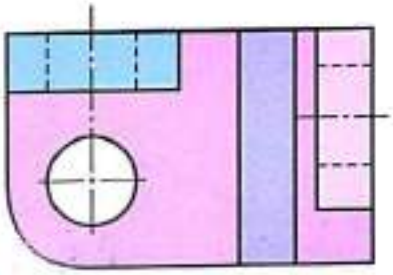

T.V.

(b)

Isometric Projections

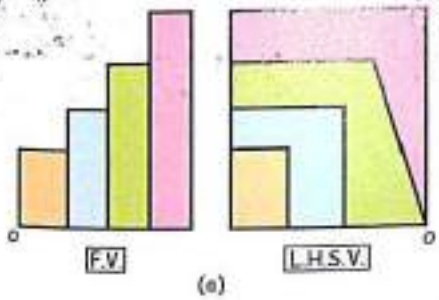

F.V.

L.H.S.V.

(a)

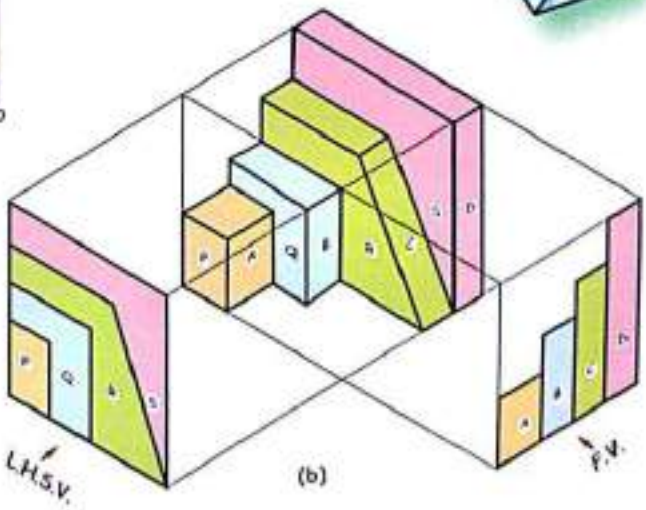

(b)

Scanned by CamScanner

Sectional Orthographic Projections

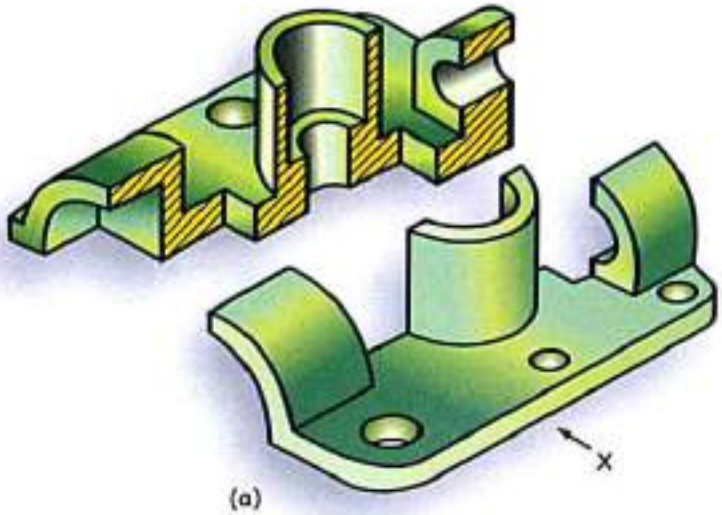

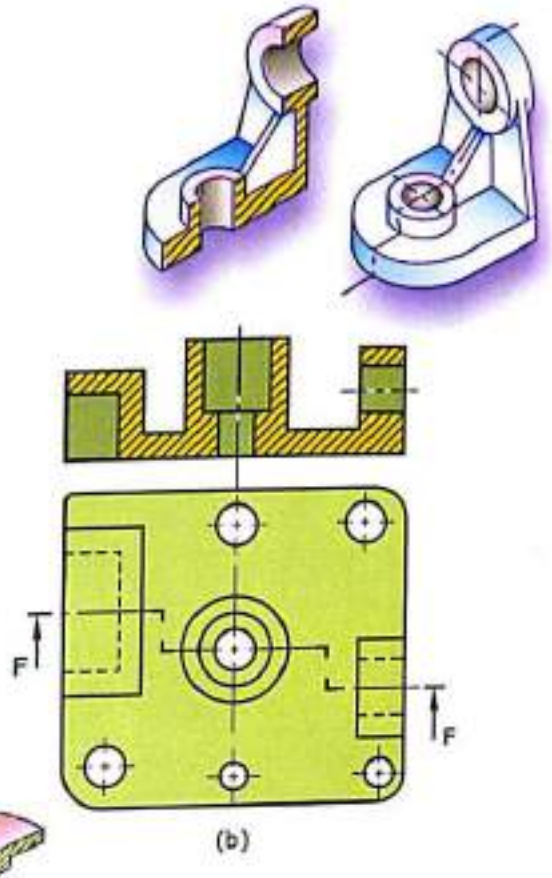

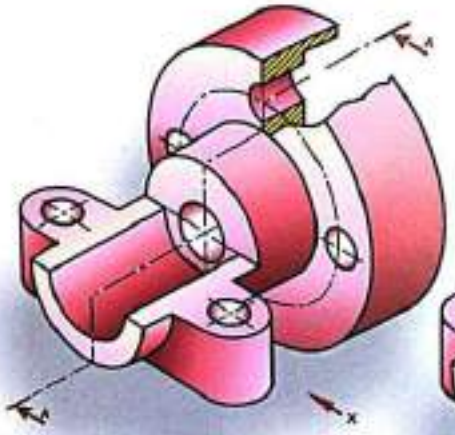

Pictorial View

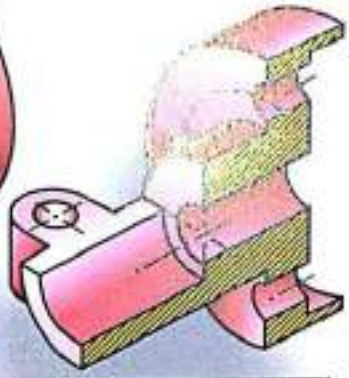

Pictorial View with Section

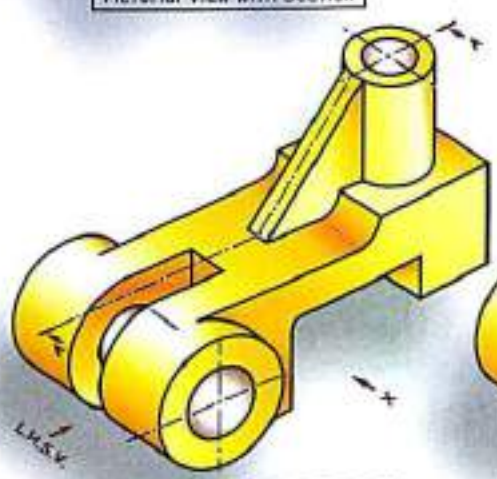

Pictorial View

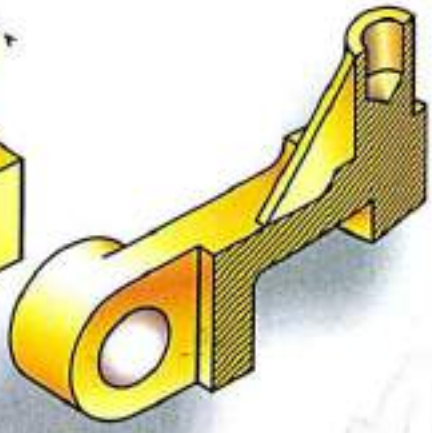

Pictorial View with Section

Scanned by CamScanner

Reading Orthographic Projections

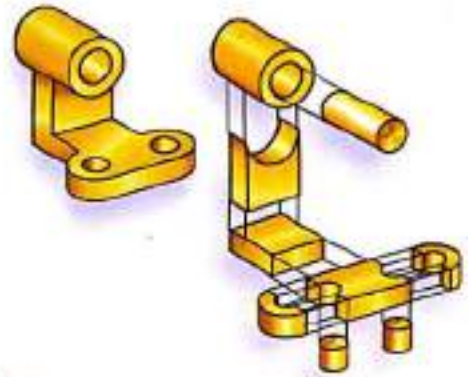

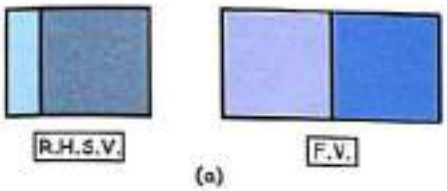

(a)

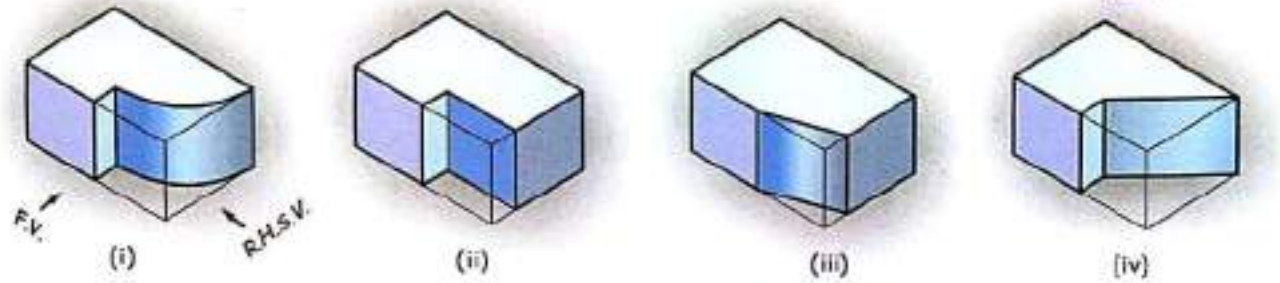

(i) (ii) (iii) (iv)

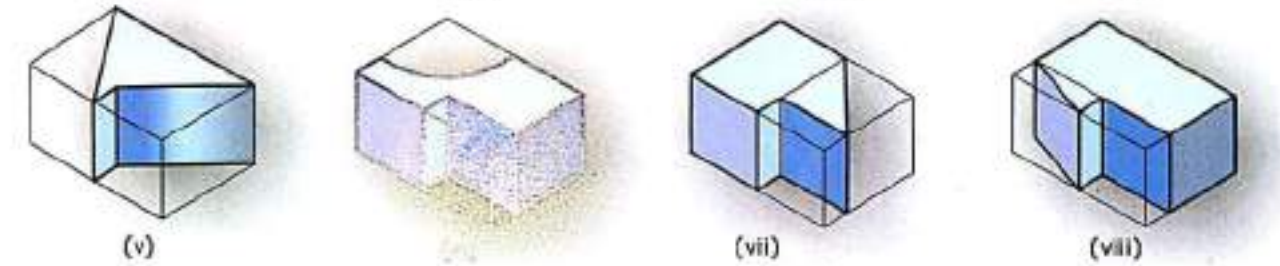

(v) (vii) (viii)

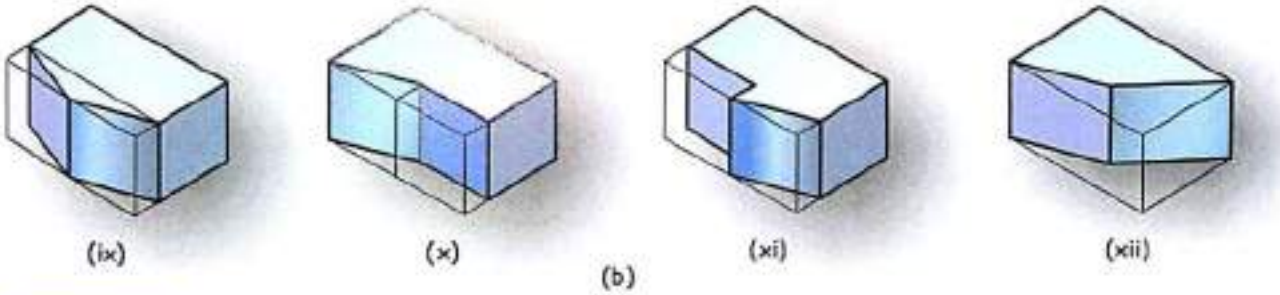

(ix) (x) (xi) (xii)

(b)

(a)

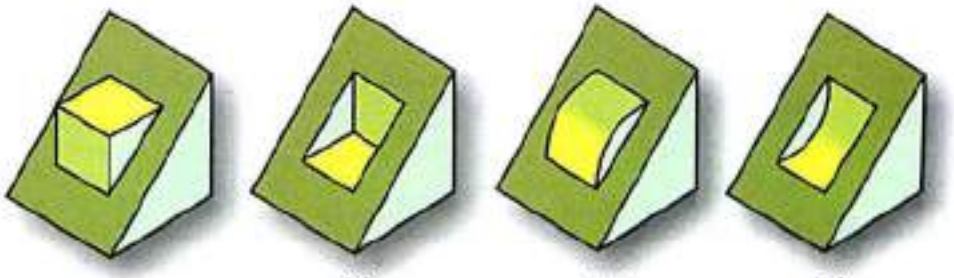

(i) (ii) (iii) (iv)

(b)

Scanned by CamScanner

Engineering Curves

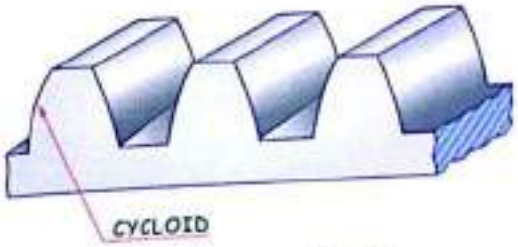

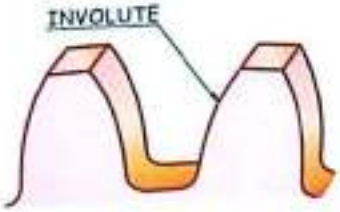

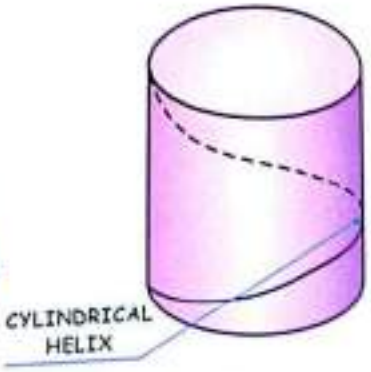

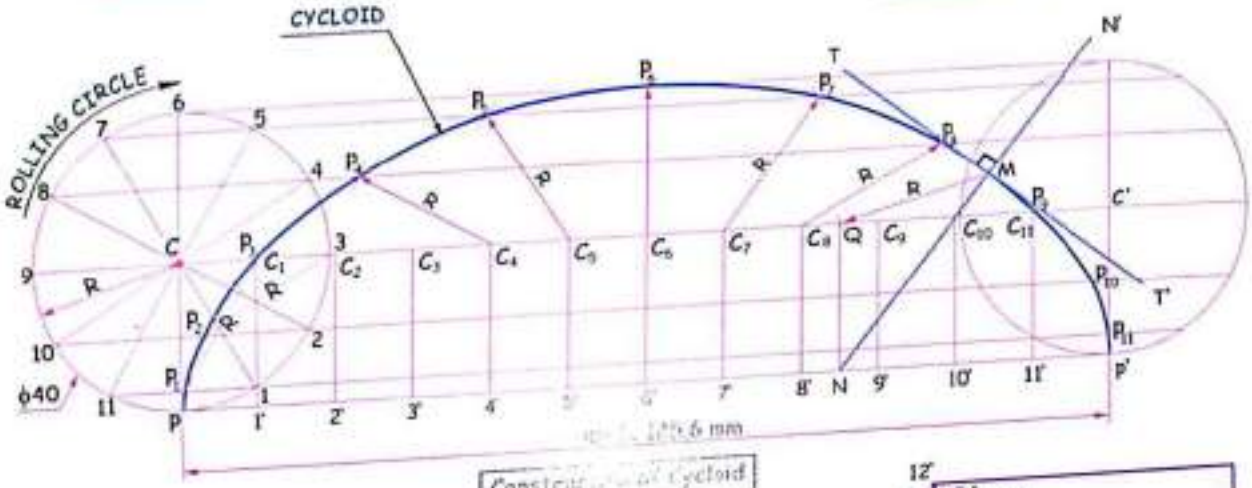

Construction of Cycloid

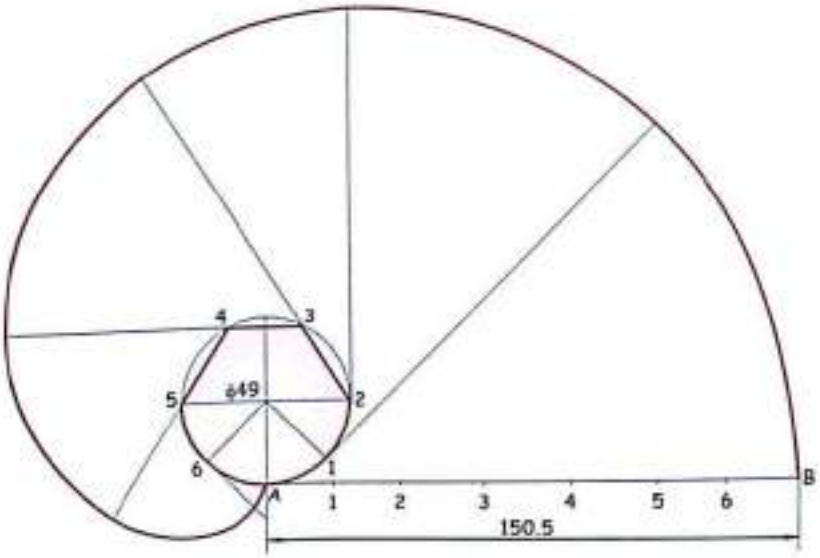

Construction of Involute

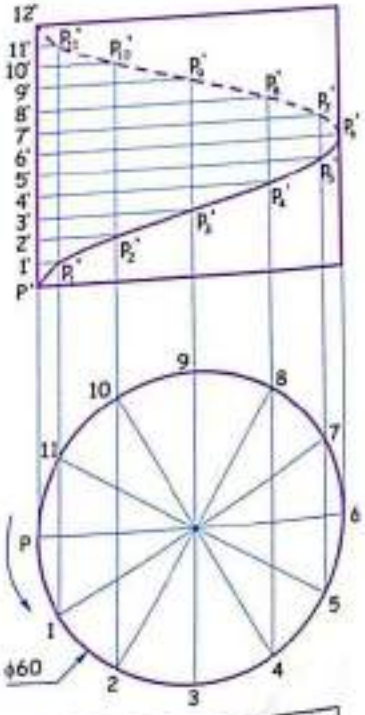

Construction of Cylindrical Helix

Scanned by CamScanner

1 BASICS OF ENGINEERING DRAWING

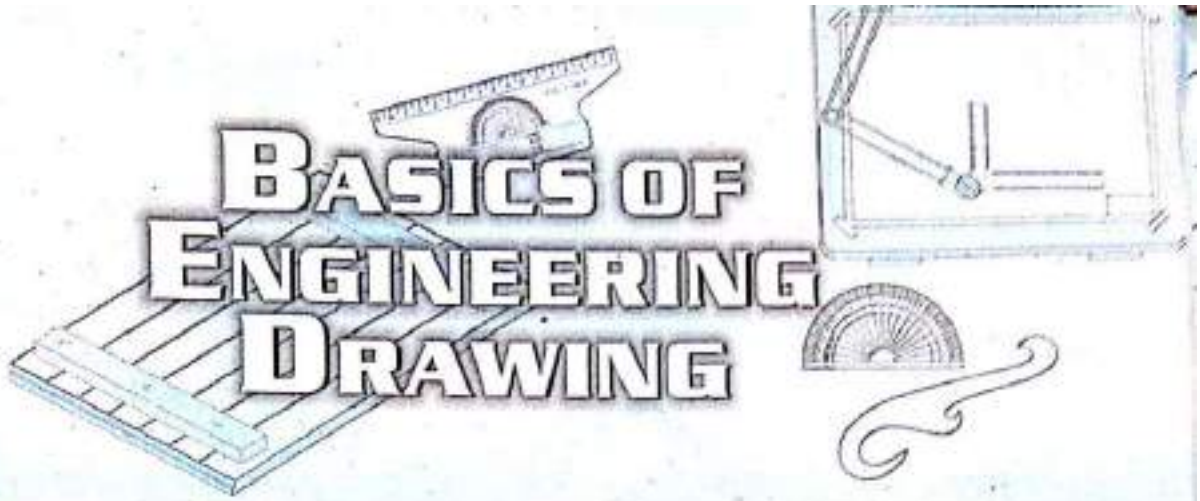

1.1 Introduction

All objects begin as ideas conceived and visualised by the engineers. The engineer makes an internal representation of an object in his mind and externalizes or communicates it to others by describing its shape and size with the help of lines, curves and signs. Engineering drawing is the graphic language of engineers, which represents any object or part of it by describing its shape and size. It has universal acceptance among technicians as an excellent means to convey technical information. The result of creative thoughts and ideas by a design engineer or engineering technologist are represented in the form of technical drawing on paper. This drawing is further analysed and followed by the manufacturer. Thus engineering drawing is a language of engineers to communicate with different departments. Just as other languages have grammar, engineering drawing has a set of universal rules or guidelines which are to be followed so that it will be interpreted and understood properly. Hence, study of engineering drawing is a must for any engineer and is used in all industries and engineering projects.

1.2 Drawing Instruments

The clarity and accuracy of a drawing depends on the quality of instruments used and the skill employed while using them. A list of essential drawing instruments is given below which is by no means exhaustive but adequate for the purposes of the students. A few instruments, widely used by professionals are deliberately left out as they are not needed by the students at this stage. The various drawing instruments are listed below,

1. Drawing Board
2. T-Square
3. Mini-Drafter
4. Set Square
5. Drawing Pencils
6. Ink Pen
7. Erasers
8. Dusters
9. Drawing Sheets
10. Drawing Pins, Clips or Adhesive Tapes
11. Compass
12. Divider
13. Scales
14. Protractor
15. French Curves
16. Templates
17. Roll - N - Draw
18. Paper Box, etc.

From the students' point of view, the above instruments and materials are sufficient to produce a required drawing easily, neatly and accurately.

Scanned by CamScanner

(1) Drawing Board

The drawing board is made up thin strips of seasoned soft-wood, arranged in a line to form a rectangular shape. Two battens are fitted by means of screws at the back to prevent wrapping. The left edge of the board is made as a working edge by fitting a perfectly straight strip, which is made of ebony or aluminium, acrylic or plastic. On this working edge, T-square is made to slide. The top surface of the board should be smooth and flat. *Refer figure 1.1 (a).*

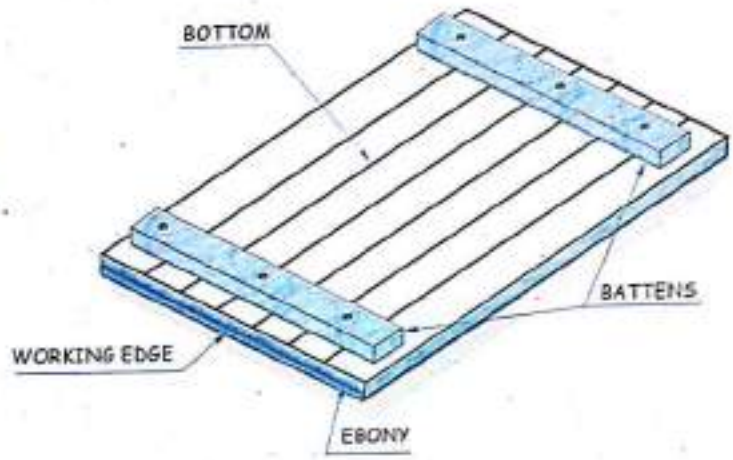

FIG. 1.1 (a) : Drawing Board

Indian Standard Institution (ISI) has recommended some standard sizes of drawing boards as listed in *table 1.1.*

Designation	Size in mm
B_0	1500 × 1000
B_1	1000 × 700
B_2	700 × 500
B_3	500 × 350

TABLE 1.1

(2) T-Square

It is made up of hard quality wood, acralic or plastics. T-square has two parts, namely the stock and the blade, which are fixed at right angle to each other. The stock is used to slide along the working edge of the drawing board whenever required. The T-square is used for drawing horizontal lines. *Refer figure 1.1 (b).*

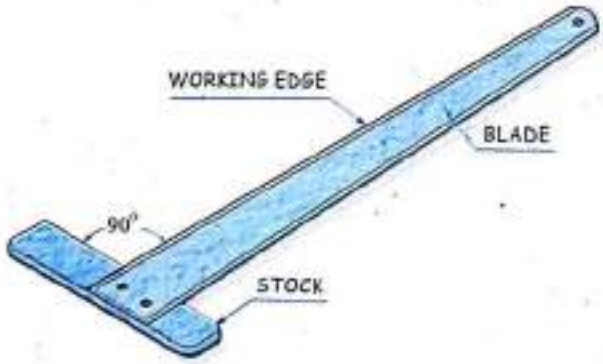

FIG. 1.1 (b) : T-Square

Scanned by CamScanner

(3) Mini-Drafter

It is a drafting machine commonly used by the students, which combines the functions of a T-square, set squares, scales and a protractor all in one. It has two blades set at right angle to each other *[Refer figure 1.1 (e)]*. The mechanism is such that, the two blades always remain parallel to their original position no matter wherever they are moved on the drawing sheet. The blades are graduated. The two blades are integral with a circular disc having marking of degrees as in protractor, which enables the setting of blades at the desired angles if required. This flexibility and combination of attachments give the advantage to the user of mini-drafter to draw the required horizontal, vertical or inclined lines of the desired length on any part of the drawing sheet.

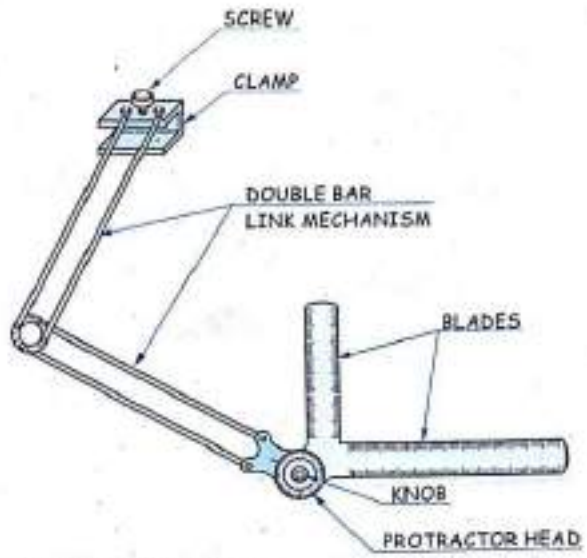

FIG. 1.1 (e) : Mini-Drafter

Setting of Mini-Drafter and Drawing Sheet

Clamp the mini-drafter by tightening the screw on left top corner of the drawing board. Align 0^0 on protractor head with reference mark and tighten the locking knob. Set the horizontal edges of mini-drafter and drawing sheet in a line and fix to drawing board with help of drawing clips or pins or adhesive tapes. *Refer figure 1.1 (d).*

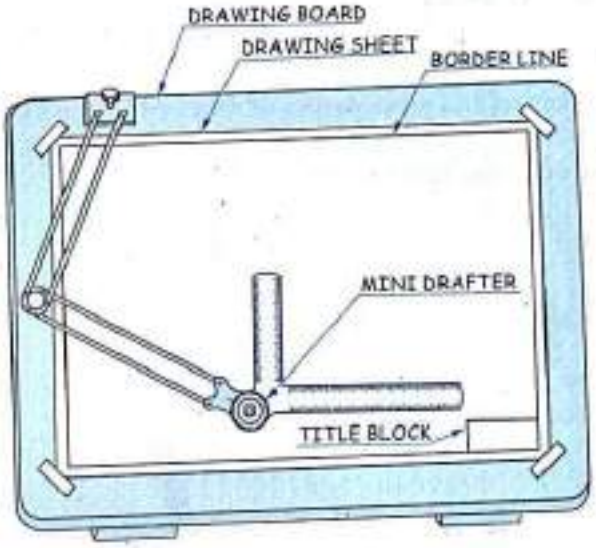

FIG. 1.1 (d) : Setting of Mini-Drafter and Drawing Sheet

Border Line

General practice is to draw the border line equally spaced on top, bottom and right side, say 10 to 15 mm and on left side is about 1.5 to 2 times than the other sides, say 20 mm to 30 mm. The more space on left hand side is recommended for easy filing or binding of drawing sheets if required.

Note : *Draw the border line and title block as recommended by the teacher.*

(4) Set-Square

Set-squares are usually made of celluloid or transparent plastic. The two common set squares are 30^0- 60^0- 90^0 and 45^0- 45^0- 90^0 *[Refer figure 1.1 (e) (i) and (ii)]*. They are used for drawing vertical and inclined lines. Proper combination of two set squares with T-square or mini-drafter can give inclined lines with 15^0 interval as shown in *figure 1.1 (e) (iii).*

Scanned by CamScanner

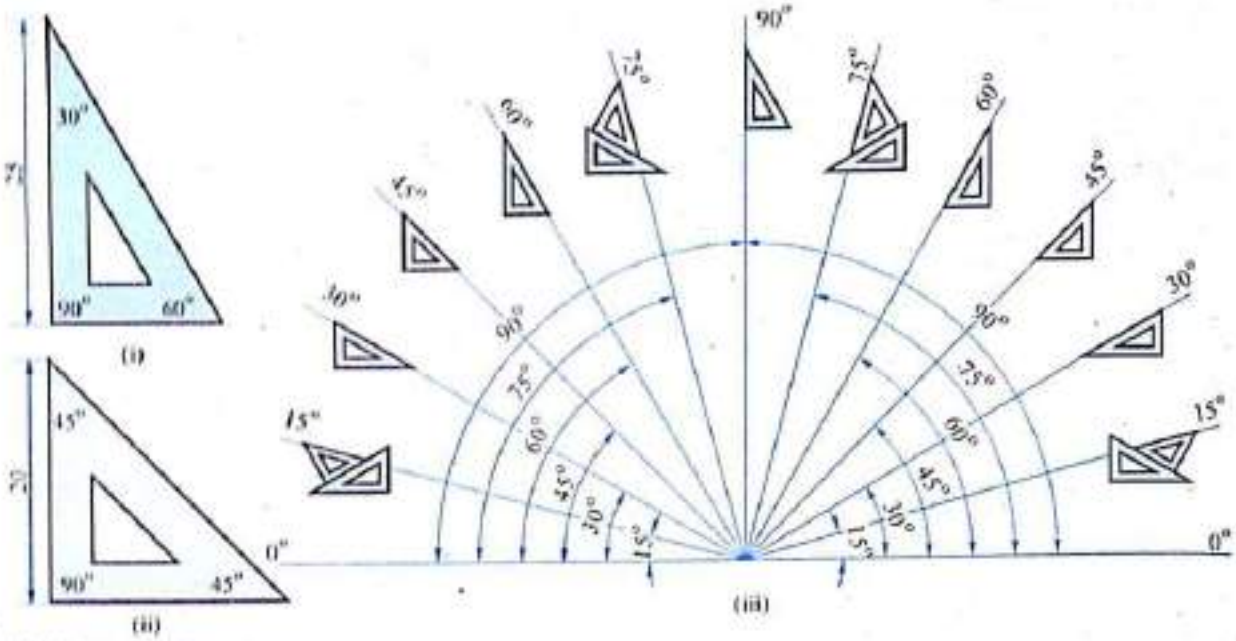

FIG. 1.1 (e) : Set-Squares

(5) Drawing Pencils

Perfection and presentation of required line work depends largely on the right selection of drawing pencil which are available in many grades. *Refer figure 1.1 (f).*

The available grades of leads are shown in *table 1.2.*

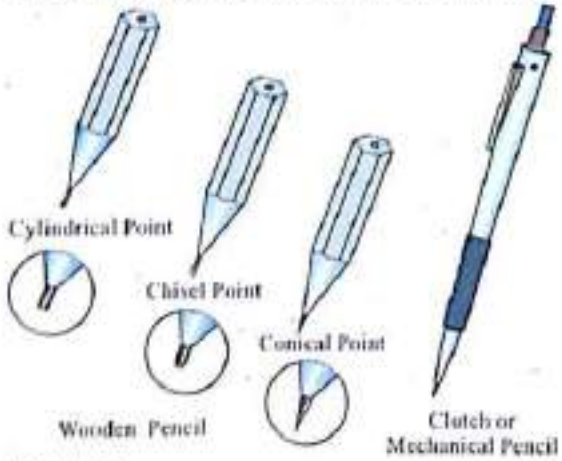

FIG. 1.1 (f)

Medium Soft	HB		
Soft	B	Medium Hard	H
Soft +	2B	Hard	2H
Very Soft	3B	Hard +	3H
Extra Soft	4B	Extra Hard	4H
Extremely Soft	5B	Extremely Hard	5H
Softest	6B	Hardest	6H

TABLE 1.2 : Grades of Leads

(6) Ink Pen

Similar to drawing pencil, ink pen is used usually on tracing paper to develop the blue prints. The ink pens are normally used by draftsmen and architects.

(7) Erasers

Use good quality soft Indian eraser, which should not spoil the drawing sheet. Avoid the frequent use of eraser.

Scanned by CamScanner

(8) Duster

A towel cloth should be used for cleaning all the instruments and materials. A clean handkerchief should be used to keep your hands free from dust and sweat.

(9) Drawing Sheets

Different varities of drawing sheets are available in the market. Standard quality paper should be used which is smooth, tough, uniformly thick and snow white. It should give better result of drawing work and in case of rubbing with eraser, it should resist the disintegration of its fibers.

Indian Standard Institution (ISI) has recommended some standard sizes of drawing sheets which are as shown in *table 1.3*.

Designation	Trimmed Size in mm
A_0	1189 × 841
A_1	841 × 594
A_2	594 × 420
A_3	420 × 297
A_4	297 × 210
A_5	210 × 148

TABLE 1.3

(10) Drawing Pins, Clips and Adhesive Tapes

After setting the drawing sheet, it is fixed on the drawing board by means of pins or clips or adhesive tapes. *Refer figure 1.1 (g).*

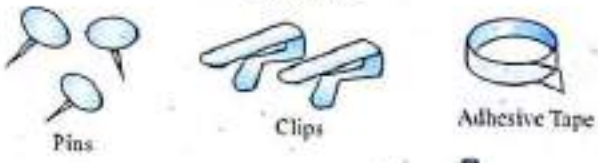

FIG. 1.1 (g)

(11) Compass

This is used for drawing circles and arcs of the circle of different radii. There are various types of compass available and are used as per the required size of circles and arcs.
Refer figure 1.1 (h).

Bow Compass : It is used for drawing small circles, which can be finely adjusted by a nut.

Lenthening Bar Compass : It is used for drawing circles of larger radius.

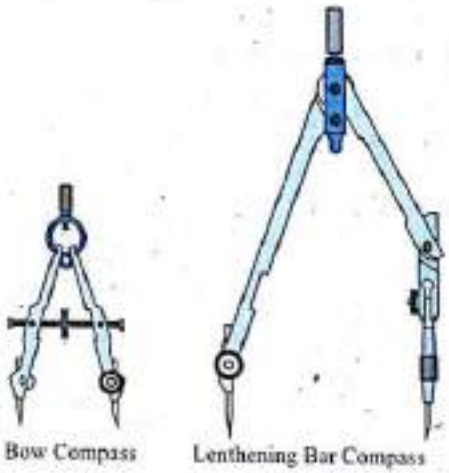

FIG. 1.1 (h)

(12) Divider

Divider is used for transferring repeated dimensions. Its two legs are hinged at the upper end and both of the lower ends of legs have steel points. *Refer figure 1.1 (i).*

FIG. 1.1 (i) : Divider

Scanned by CamScanner

(13) Scales

Scale is used for measuring and transferring the required length of an object on paper. The natural scales used are either metric scale or inches scale. The commonly used natural scale in metric scale is flat or triangular in three cross sections. One is of size 15 cm long and 2 cm wide and the other is of size 30 cm long and 3 cm wide with thickness 1 mm (approximately). The scales are marked with divisions of centimeters and millimeters. *Refer figure 1.1 (j).*

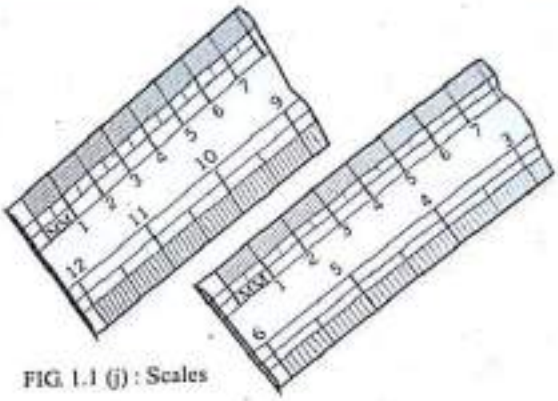

FIG. 1.1 (j) : Scales

(14) Protractor

This is used for measuring and marking of angles with accuracy. A transparent plastic made, semi-circular protractor is commonly used. The protractor is marked with division of 1° as a least count ranging from 1° to 180° readable from both the ends. Base line is provided with perpendicular centre line as a reference line. *Refer figure 1.1 (k).*

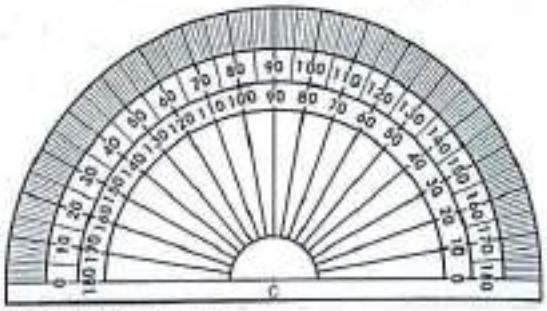

FIG. 1.1 (k) : Protractor

(15) French Curves

Other than a circle or an arc of a circle, if a curve is to be drawn, for example ellipse, parabola, hyperbola etc., the french curve is used. Firstly (by freehand), draw the thin curve passing through the located points. Set the portion of the french curve such that it matches with the freehand curve to a large extent and then draw a neat continuous single stroke curve with care not to form any corner in complete curve. The use of french curves can be mastered by practice. *Refer figure 1.1 (l).*

FIG. 1.1 (l) : French Curve

(16) Templates

The smaller circles are difficult to draw by means of compass. To speed up the work, templates available in the market are used. It is a thin transparent plastic plate having circular holes of known diameters with lines marked on the circumference of each circle at right angle. We can use these templates for drawing the required circle by coinciding the marked lines with the axis of the circle which is drawn on paper.

Not only for circles but for many other geometrical shapes, such as triangular, square, rectangular, pentagonal, hexagonal, ellipse etc. templates are available. *Refer figure 1.1 (m).*

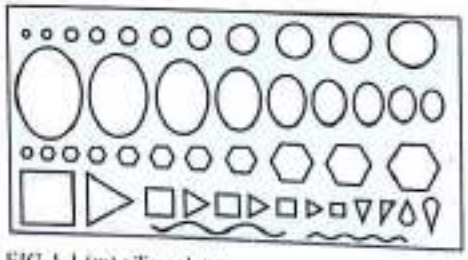

FIG. 1.1 (m) : Templates

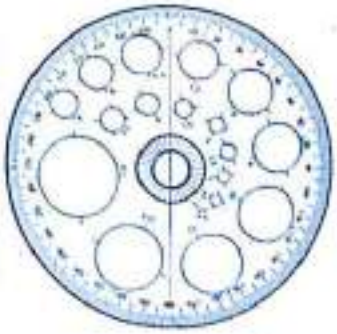

Scanned by CamScanner

(17) Roll-N-Draw

This is used for drawing parallel lines horizontally as well as vertically. This has a straight edge having 16 cm or 30 cm scale ruler. It can be rolled down and up as required.
Refer figure 1.1 (n).

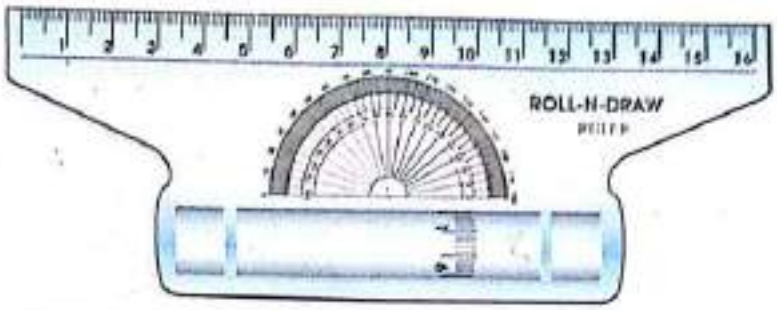

FIG. 1.1 (n) : Roll-N-Draw

(18) Paper Carrying Box (Roll Pack)

It is a fibre moulded paper carrying box. The drawing sheets of A_1 and A_2 size can be carried with-out folding and creasing.
Refer figure 1.1 (o).

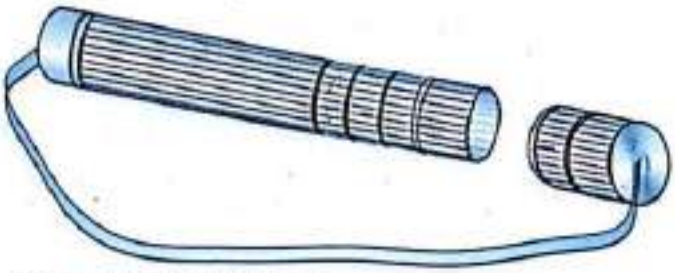

FIG. 1.1 (o) : Paper Carrying Box

1.3 Exercise

***Note :** All dimensions are in mm.*

Copy *figures 1.2 (a), (b), (c)* and *(d)* by using mini-drafter and set square.

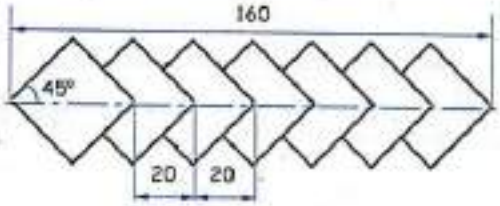

FIG. 1.2 (a)

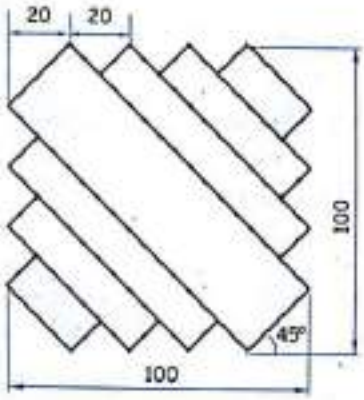

FIG. 1.2 (b)

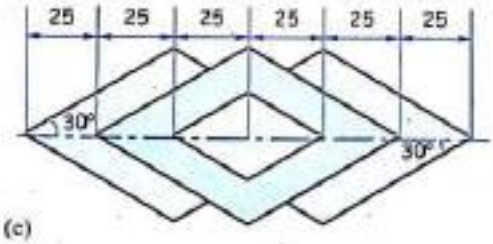

FIG. 1.2 (c)

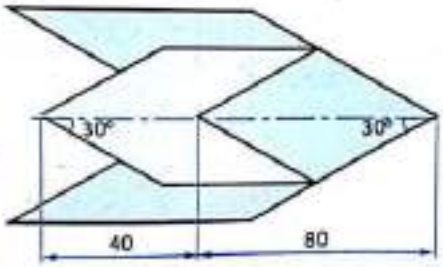

FIG. 1.2 (d)

Scanned by CamScanner

1.4 Types of Lines and Their Applications

As engineering drawing is the visual graphic language of engineers, the construction of an object is drafted on a drawing sheet with different type of lines so that it can convey the technical information clearly.

In engineering drawing, the various type of lines with different thickness are used to communicate the technical ideas. Construction of such lines are shown in *table 1.4*.

Sr. No.	Type of Lines	Illustration	General Application
1.	Continuous thick		Visible outlines.
2.	Continuous thin		Dimension line, Extension line, Leader line, Hatching line, Outline of adjacent part, Revolved section.
3.	Medium thick short dashes		Hidden line (Non-visible dotted line).
4.	Long chain thin		Centre line, Locus line, Pitch circle.
5.	Long chain thin and thick at ends only		Cutting plane line.
6.	Continuous thin wavy		Irregular boundary line, Short break line.
7.	Ruled line and short zig-zag thin		Long break line.

TABLE 1.4 : Type of Lines and Their Applications

***Note :** Please use this table as reference when trying to distinguish lines in all figures in this book.*

Figure 1.3(a) is the pictorial view of an object and *figure 1.3(b)* is its sectional view.

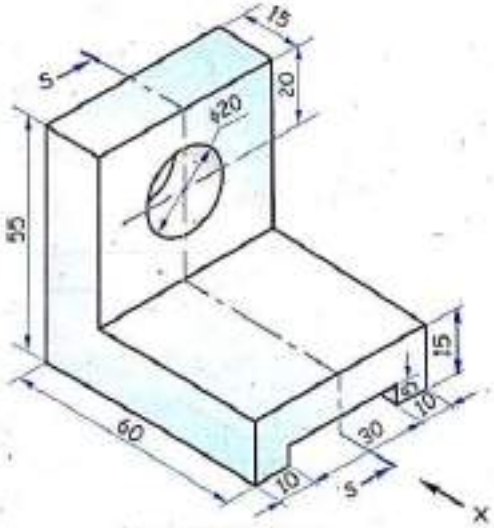

FIG. 1.3(a) Pictorial View

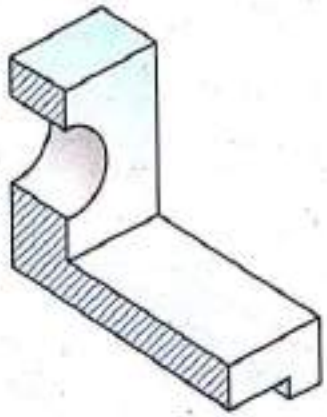

FIG. 1.3(b) Sectional View

Scanned by CamScanner

Figure 1.3(c) is the orthographic view of the same object, which shows the application of different type of lines.

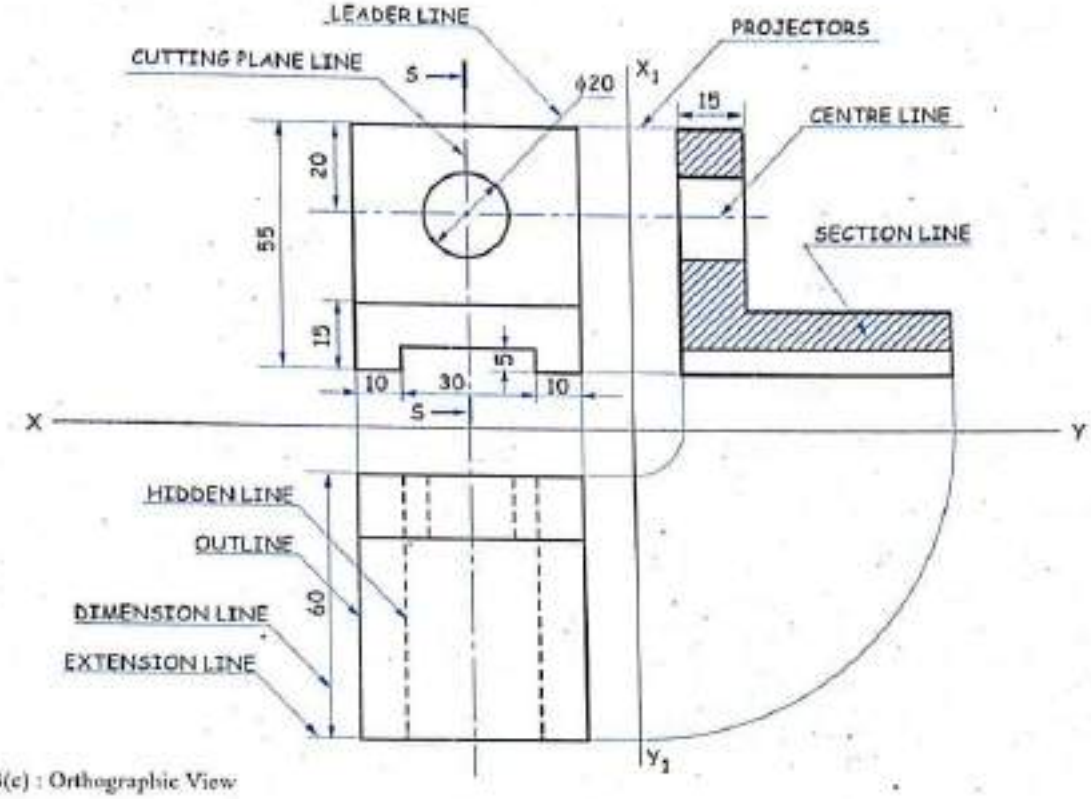

FIG. 1.3(c) : Orthographic View

1. **Outline :** These are thick continuous lines drawn to represent visible edges, surface boundaries and final shape of the object.
2. **Hatching Lines (Section Lines) :** These are continuous thin lines drawn at an angle of 45° to the reference line *XY* and evenly spaced at 1 to 1.5 mm (approximately) apart.
3. **Hidden Line (Dotted Line) :** This line is medium thick and is made up of short dashes 2 mm (approximately) in length evenly spaced at equal distance of 1 mm (approximately).
4. **Centre Line :** This line is drawn to represent the central portion of an object which is symmetrical on two sides, e.g. centres of circles, arcs, axes of cylinders, cones, holes, shafts etc. It is the combination of small dashes and big dashes alternately placed forming a long chain line. The length of small dash is 1 to 1.5 mm (approx.), long dashes are 6 to 8 times longer than the small dashes and the gap between them is 1 mm (approx.). Generally, centre lines are extended for a short distance beyond the outline. For dimensioning, centre line can be extented if required.
5. **Projectors (Construction Line) :** These lines are continuous thin and very faint (light) lines used as guide lines.
6. **Cutting Plane Line :** This line shows the specific location of cutting plane. It is similar to centre line with both ends thick. The arrow head is attached to thick ends, which indicates direction in which the section is viewed.
7. **Short Break Lines :** These lines are continuous, thin and wavy, drawn freehand and indicate short break.
8. **Long Break Lines :** These lines are continuous thin and zig-zag lines are introduced in between. It indicates long break.

Scanned by CamScanner

1.5 Lettering

Dimensions of numerals or titles or notes in alphabets, when drawn uniformly with care by maintaining the ratio of letters (i.e. height : width), inclination and strength of line is called as *lettering*.

Improper lettering spoils the appearance of neatly drafted drawing. The lettering should be done with care to add the clear information. It should be simple, legible and uniform. Freehand lettering is preferable rather than those drawn by instruments, because it consumes less time.

1. Single Stroke Letters : These are one of the simplest letterings in which the width of the straight and curved lines used to form the letters is same. One can lift the pencil if required because the basic intention is to maintain a letter of single stroke (i.e. uniform thickness).

There are two types of single stroke letters

(a) Vertical single stroke.

(b) Inclined single stroke (usually at 75°).

The size of letter is specified by its height. Generally, the ratio of height to width for most of the capital letters are taken as 6:5 and for most of the lower case (small) letters are taken as 4:4.

(a) Vertical Single Stroke Letters *[Refer figure 1.4]*

FIG. 1.4

(b) Inclined Single Stroke Letters at 75° *[Refer figure 1.5]*

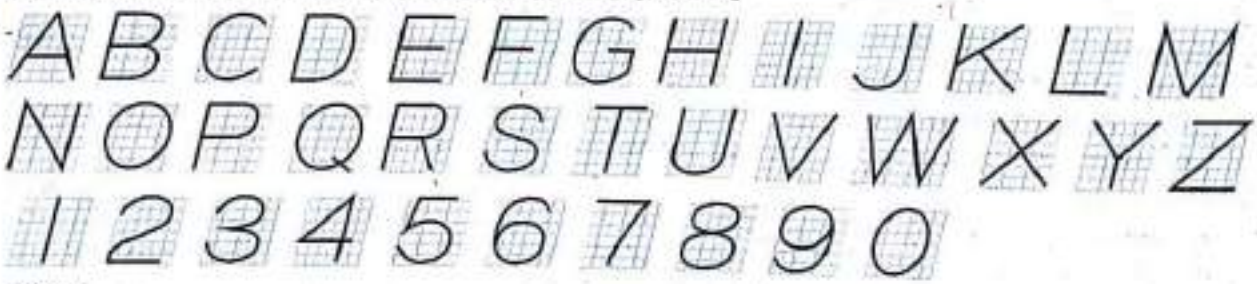

FIG. 1.5

2. Gothic Letters : If the single stroke letter is made uniformly more thick (ranging from $1/10^{th}$ to $1/5^{th}$ height of letters) it is called as *gothic letter*. Generally, it is used for giving titles on machine drawing. *Refer figure 1.21.*

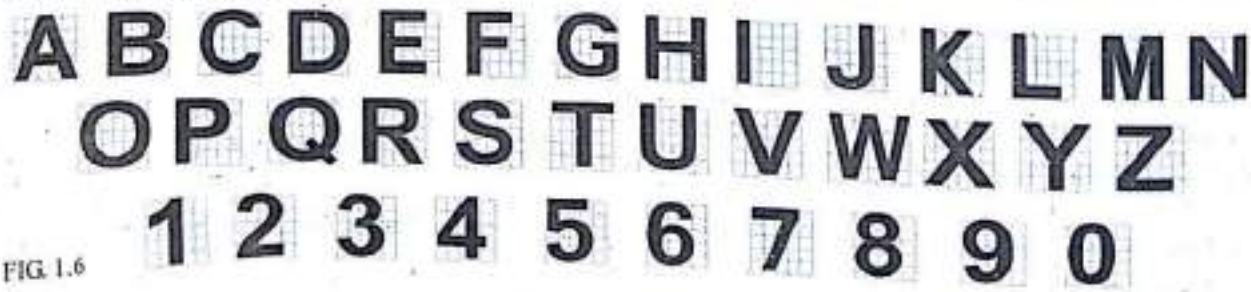

FIG. 1.6

Scanned by CamScanner

1.6 Scales

Introduction

In engineering drawing it is often inconvenient to represent the actual size of the object example bridges on the drawing. So we generally reduce it to some proportion to show on drawing sheet. However in case of small machine parts example watch parts it becomes essential to increase actual size of object.

The proportion by which we are enlarging or reducing actual length of the object on the drawing is known as scale.

Sizes of Scale

Three sizes of the scale used in engineering practice.

(1) Full size scale (2) Reduced scale (3) Enlarged scale.

1. Full Size Scale

The scale in which objects are drawn with actual measurements is known as *full size scale*. It is written as 1:1.

2. Reduced Scale

The scale in which objects are drawn with reduced proportion is known as *reduced scale*. Standard reducing proportion are

1:2 - drawing made to one half of the actual size.

1:5 - drawing made to one fifth of the actual size.

1:10 - drawing made to one tenth of the actual size.

Reduced Scale		
1:2	1:5	1:10
1:20	1:50	1:100
1:200	1:500	1:1000
1:2000	1:5000	1:10000

3. Enlarged Scale

The scale in which objects are drawn with increased proportions is known as *enlarged scale*. Standard proportions are

2:1 - drawing made to twice the actual size.

5:1 - drawing made to five times the actual size.

10:1 - drawing made to ten times the actual size.

Enlarged Scale		
2:1	5:1	10:1
20:1	50:1	100:1
200:1	500:1	1000:1
2000:1	5000:1	10000:1

Representative Fraction (R.F.)

It is the ratio of the length of the object on the drawing to the actual length of the object (both being in same unit)

$$\text{R.F.} = \frac{\text{Length of object in drawing}}{\text{Actual length of object}}$$

Example 1 : 10 cm length of line drawn on drawing sheet, represents actual length of 10 m. Find the R.F.

$$\text{R.F.} = \frac{\text{Drawing size}}{\text{Actual size}} = \frac{10\text{ cm}}{10\text{ m}} = \frac{10\text{ cm}}{10 \times 100\text{ cm}} = \frac{1}{100}$$

$\therefore$ R.F. = 1:100. This represents a reduced scale.

Example 2 : A line of 20 cm is drawn on drawing sheet to represent the true length of 10 mm. Find the R.F.

$$\text{R.F.} = \frac{\text{Drawing size}}{\text{Actual size}} = \frac{20\text{ cm}}{10\text{ mm}} = \frac{20 \times 10\text{ mm}}{10\text{ mm}} = \frac{20}{1}$$

$\therefore$ R.F. = 20:1. This represents an enlarge scale.

Comparision of half scale (1:2) and double scale (2:1) with full scale (1:1) is shown in *figure 1.7*.

Scanned by CamScanner

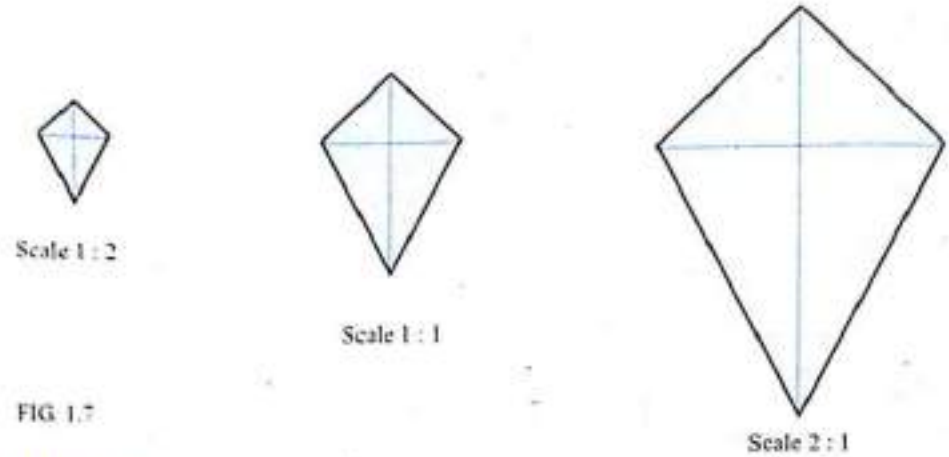

FIG. 1.7

Scales on Drawing

Following information is essential while constructing a scale.

(1) R.F. (Representative Fraction) of the scale.

(2) The units which it must represent example millimeters and centimetres, yard, feet, inches.

(3) The maximum length to be shown.

Length of the scale is determined as

Length of the scale = R.F. × Maximum length to be shown

Some Important Conversion

Metric Measures		British Measures	
10 millimetres (mm)	= 1 centimetre (cm)		
10 centimetres (cm)	= 1 decimetre (dm)	12 inches	= 1 foot
10 decimetres (dm)	= 1 metre (m)	3 feet	= 1 yard
10 metres (m)	= 1 decametre (dam)	220 yards	= 1 furlong
10 decametres (dam)	= 1 hectometre (hm)	8 furlong	= 1 mile
10 hectometres (hm)	= 1 kilometre (km)		

Classification of Scale

Scales used in engineering drawing are classified as

(1) Plain Scale (2) Diagonal Scale (3) Comparative Scale

(4) Vernier Scale (5) Scale of Chord (6) Isometric Scale

1.7 Dimensioning

The view drawn on the paper with the help of some suitable scale represents the complete idea of an actual object. Expression of detail information about the actual object's length, width, height, complete size, positions of holes etc. in figures with appropriate units of measurement and properly placed lines, symbols and notes is called as *dimensioning*.

Figure 1.3 (c) is redrawn to explain the types of lines such as dimension line, extension line, leader line and arrow head and there uses in dimensioning. *Refer figure 1.8.*

1. **Dimension Line :** This line is continuous thin line having both ends marked with arrow heads.

2. **Extension Line :** This line is continuous thin line drawn for enclosing of dimension line and is extended 2 to 4 mm (approx.) beyond dimension line.

Scanned by CamScanner

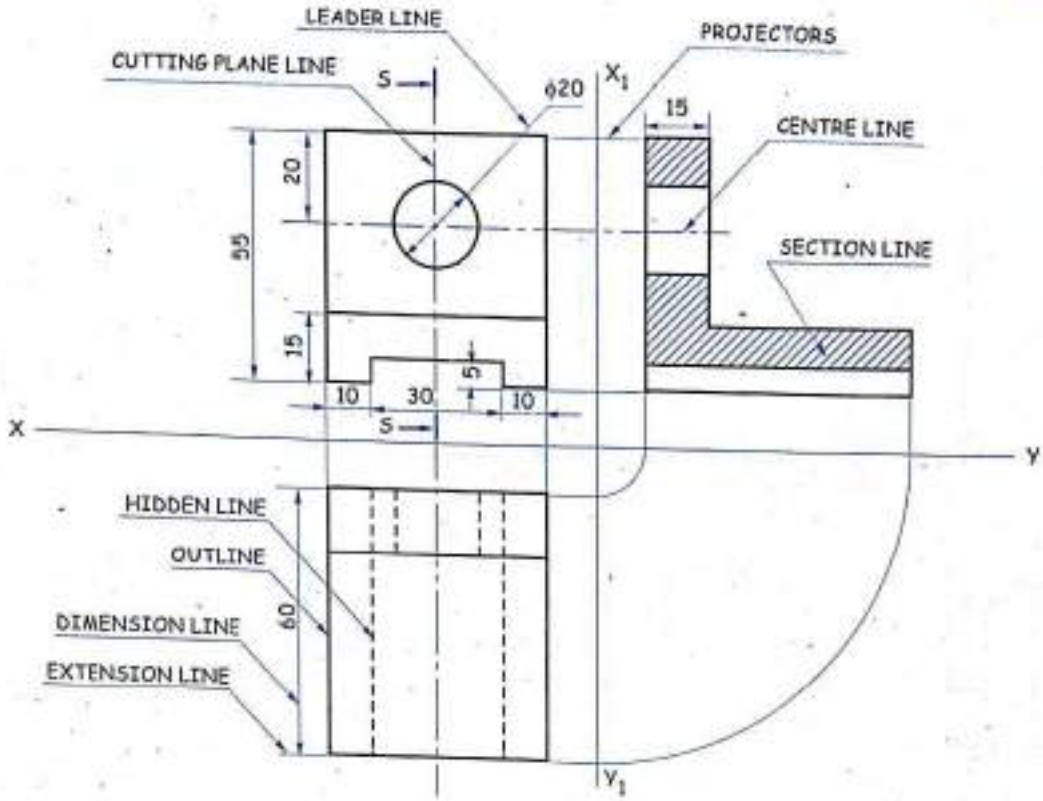

FIG.1.8

3. **Leader Line :** This line is continuous thin line inclined to the reference line *XY* usually at 30° or 45° or 60° or 75°, which specifies the dimension or note at the outer end.

4. **Arrow Head :** The ends of dimension line are marked with arrow heads, which should be drawn in proportion of 1 : 3 (approx.) as shown.

1.7.1 System of Dimensioning

There are two systems of placing the dimensions : (1) Aligned system and (2) Uni-directional system.

1. **Aligned System :** The figures are placed above the dimension line such that they are readable either from bottom or from right hand side of the drawing. *Refer figure 1.9.*

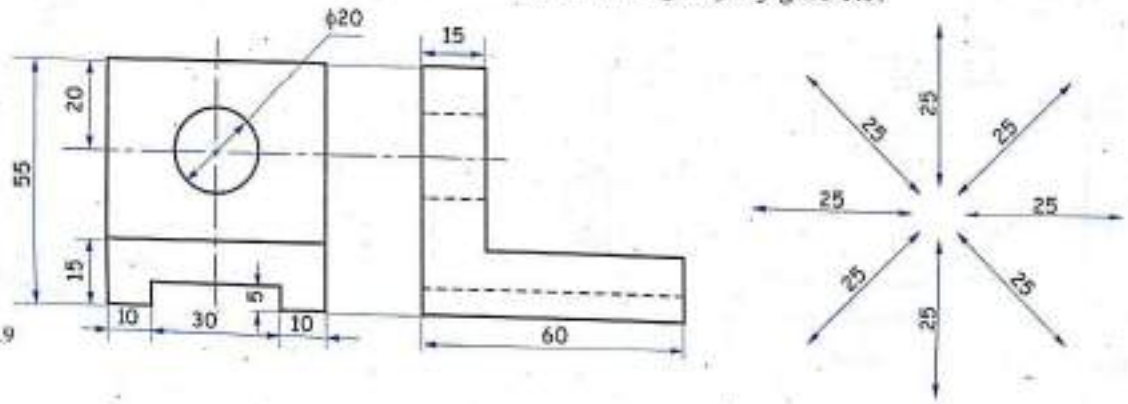

FIG.1.9

Scanned by CamScanner

2. **Uni-directional System :** The figures are so placed that they can be readable only from bottom side of the drawing. The figures are inserted centrally between the dimension line. *Refer figure 1.10 (a).*

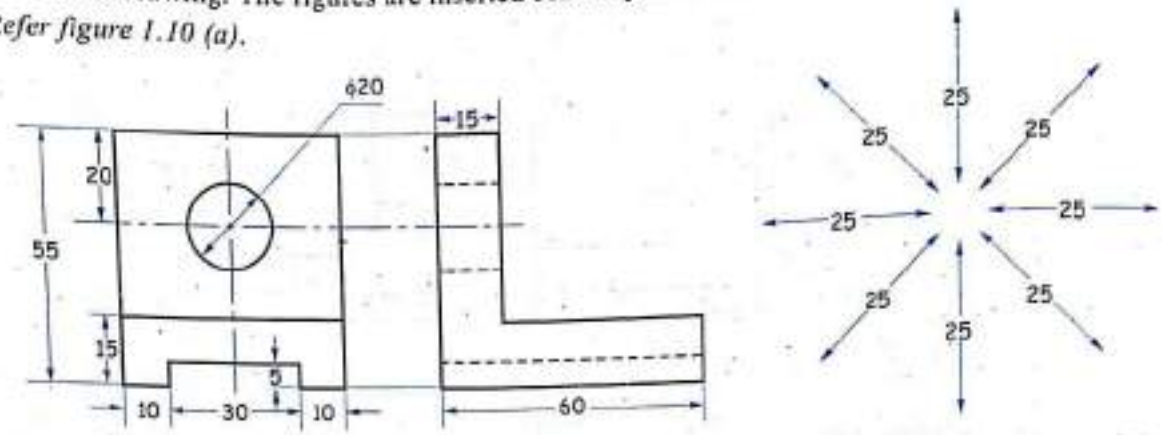

FIG.1.10 (a)

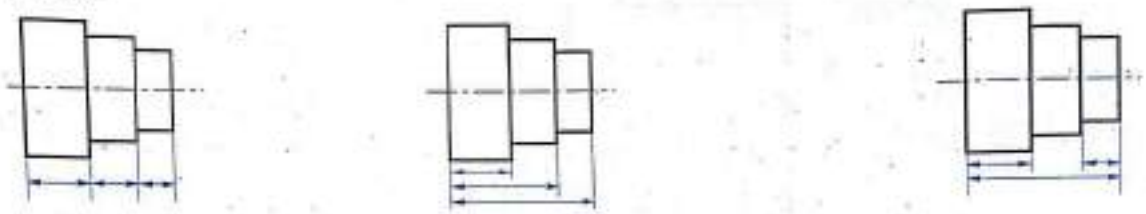

(i) Chain Dimension (ii) Parallel Dimension (iii) Combined Dimension

FIG.1.10 (b)

(i) The dimensions are arranged in a straight line.

(ii) Common base line is used for all the dimensions. The extension lines are arranged in such a way that they do not cross dimension line and hence the smaller lines comes nearer and larger away from the view.

(iii) The simultaneous use of chains and parallel dimensions results combined dimension. *Refer figure 1.10 (b).*

1.7.2 Basic Principles in Dimensioning

1. As far as possible, dimensions should be placed outside the view about 5 to 6 mm away from the outline. In exceptional cases where more clarity and readability are required one can dimension inside the view. *Refer figure 1.11.*

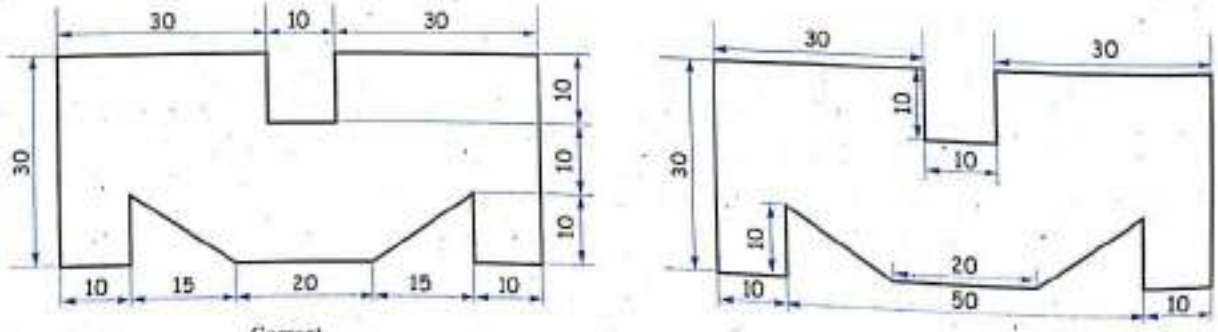

FIG.1.11 Correct Incorrect

Scanned by CamScanner

2. Avoid the repetitions of dimensions in views. *Refer figure 1.12.*

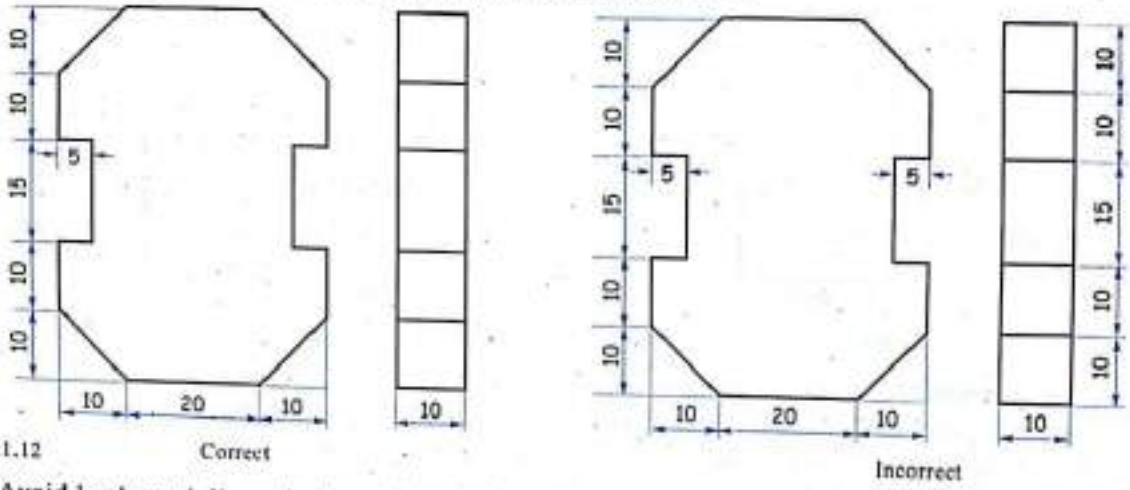

FIG.1.12

3. Avoid haphazard dimensioning. *Refer figure 1.13.*

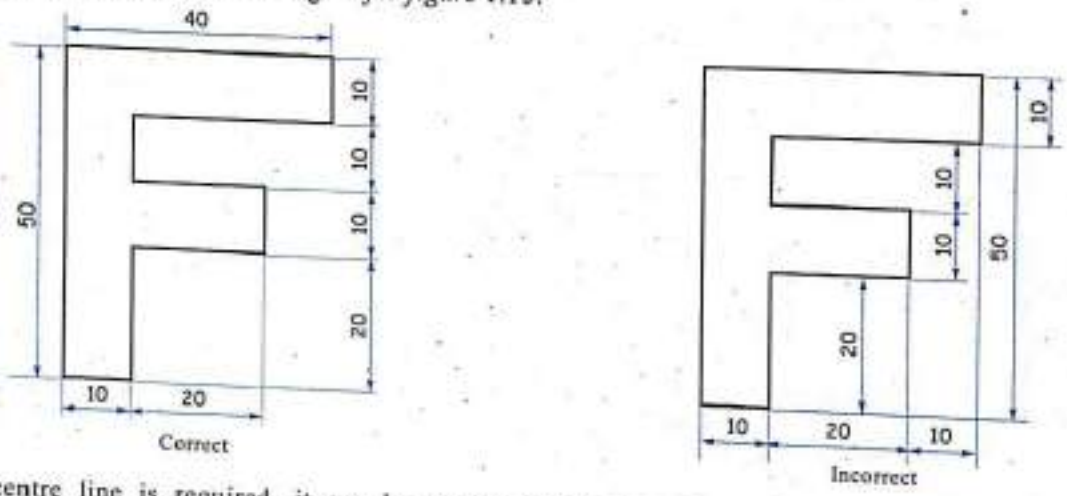

FIG.1.13

4. If centre line is required, it can be used properly as an extension line for dimensioning. *Refer figure 1.14.*

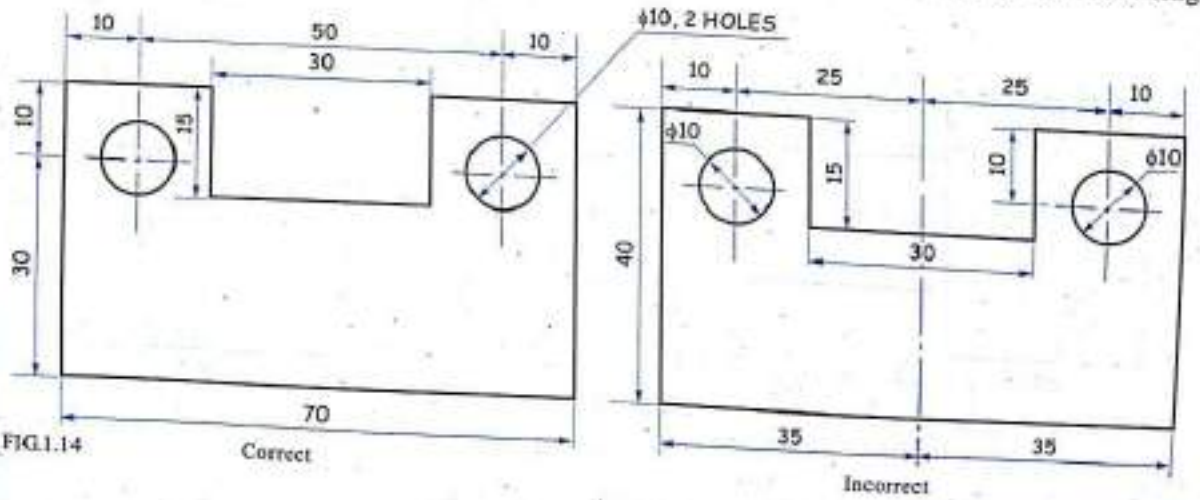

FIG.1.14

Scanned by CamScanner

5. Avoid using outline of views for dimensioning. *Refer figure 1.15.*

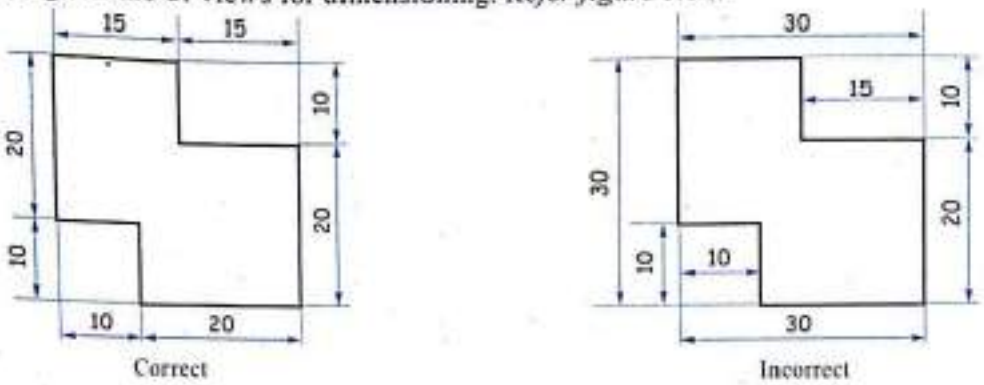

FIG.1.15

6. As far as possible dimension lines should not intersect each other.
7. Dimensions should be generally expressed in one unit, the millimeters. The symbol 'mm' should not be written with each dimension but a general note should be given stating that "ALL DIMENSIONS ARE IN mm".
8. Proper interpretation of shapes are dimensioned with the following indications. *Refer figure 1.16 (a), (b), (c) and (d).*

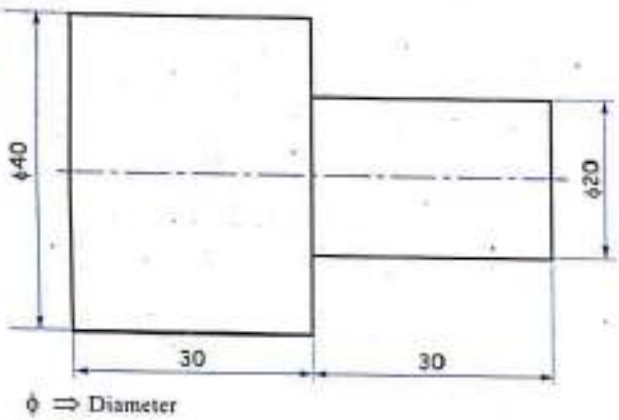

FIG.1.16 (a)

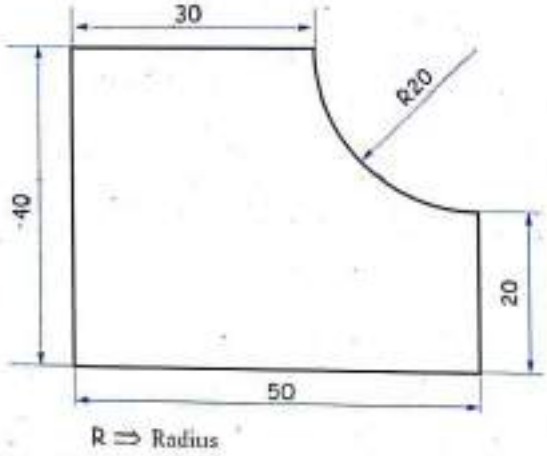

FIG.1.16 (b)

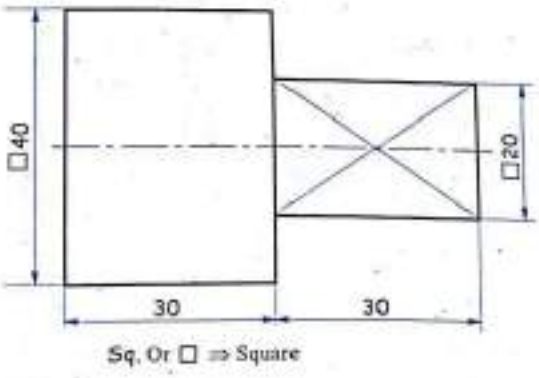

FIG.1.16 (c)

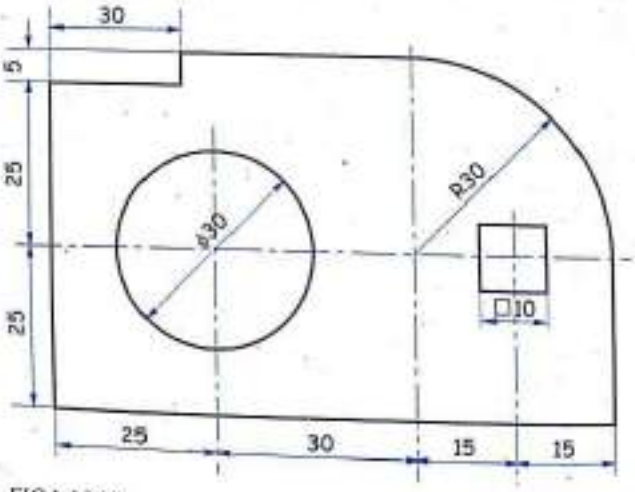

FIG.1.16 (d)

Scanned by CamScanner

9. Avoid dimensioning for hidden lines if possible. *Refer figure 1.17.*

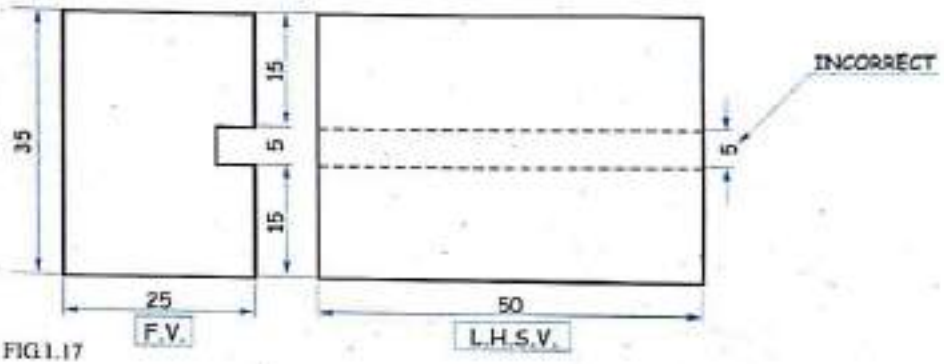

FIG.1.17

10. Dimensioning of hole. *Refer figure 1.18.*

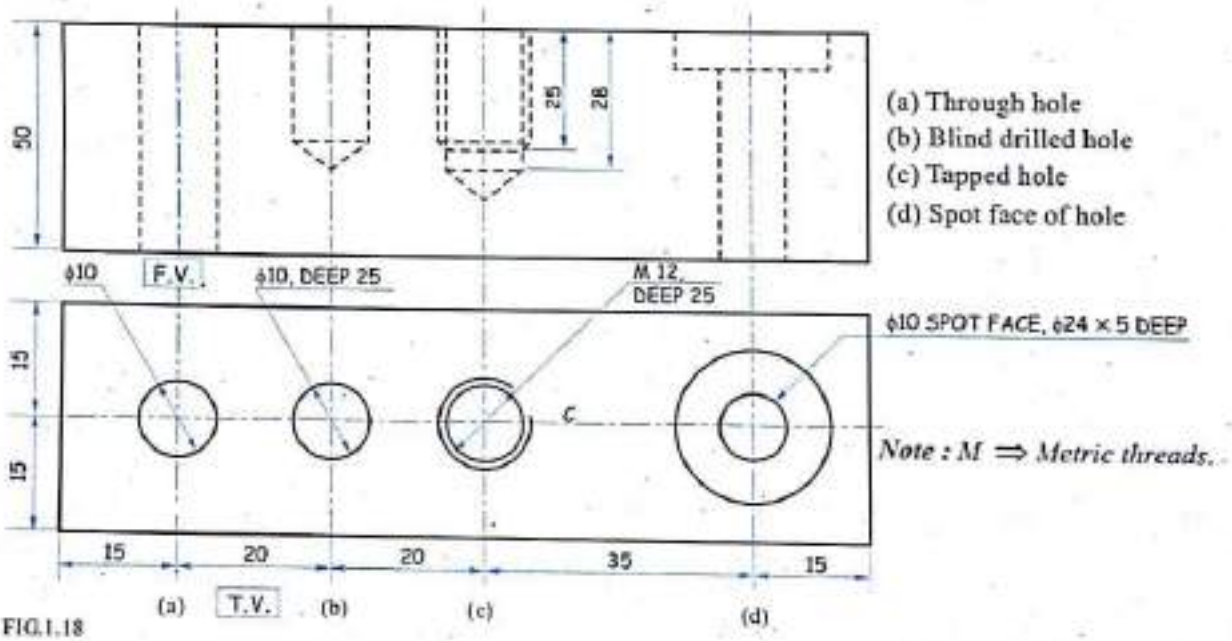

FIG.1.18

11. Dimensioning of chamfer. *Refer figure 1.19 (a) and (b).*

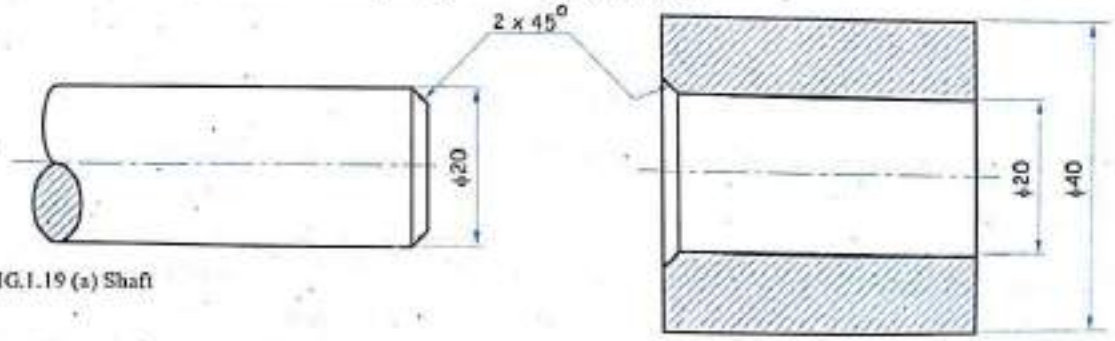

FIG.1.19 (a) Shaft

FIG.1.19 (b) Hole

Scanned by CamScanner

12. Dimensioning of counter sink. *Refer figure 1.20.*

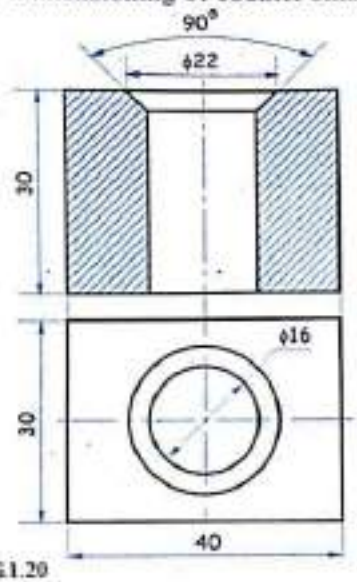

FIG.1.20

13. Dimensioning of key ways. *Refer figure 1.21(a) and (b).*

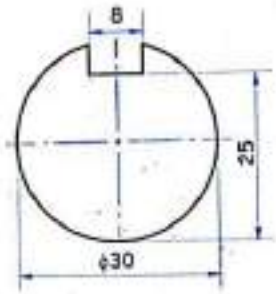

FIG.1.21 (a) Shaft

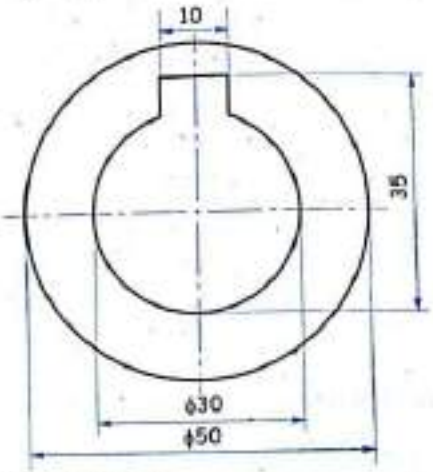

FIG.1.21 (b) Hub

14. The leader line should be used for dimensioning the circle or for introducing a note, it should be inclined at 45° (preferably) or 30° or 60°.

15. The dimensioning of a circular part or arc should be preferably given in the view where it is seen as a circle or arc. Dimensioning of a circle depends upon the size of the circle. *Refer figure 1.22.*

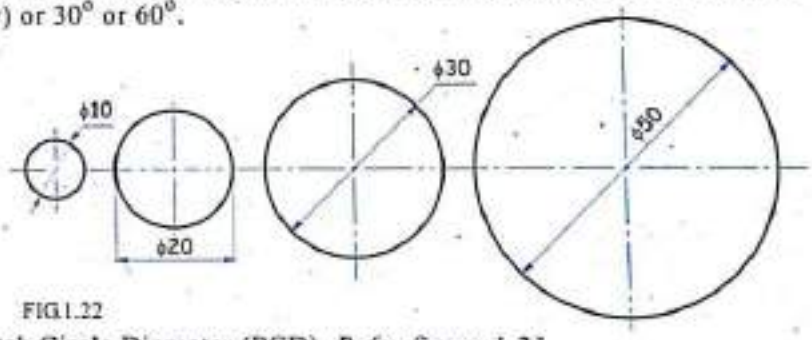

FIG.1.22

16. Dimensioning of holes on Pitch Circle Diameter (PCD). *Refer figure 1.23.*

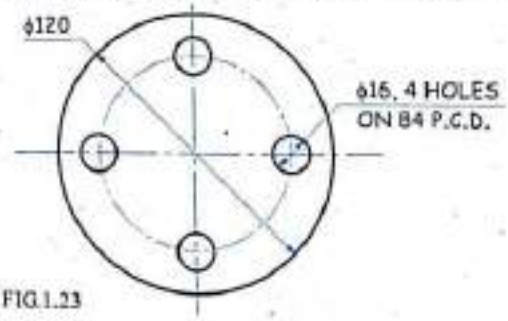

FIG.1.23

17. As per the space available dimensions may be given as shown.

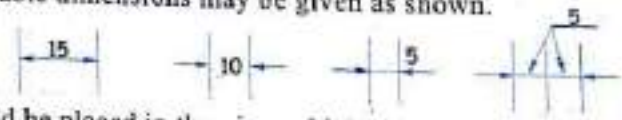

18. Each dimension should be placed in the view which shows the relevant features more clearly.
19. The smaller dimensions should be nearer to the outline while the larger ones away.
20. Extension lines are drawn starting from the outlines of the view.

Scanned by CamScanner

1.8 Geometrical Constructions

The knowledge of *geometrical construction* which is mostly based on plane geometric fundamentals becomes very essential as it frequently occurs while drafting an engineering drawing. We are already familiar with some of the simple geometrical constructions such as triangles, rectangles, squares, circles etc., and here, we are going to see some of the other geometrical constructions required.

1. ***To Construct a Regular Hexagon of Side of a Given Length***

(a) Use a proper combination of set square and mini-drafter with given length of side of hexagon and draw the hexagon as shown. *Refer figure 1.24 (a).*

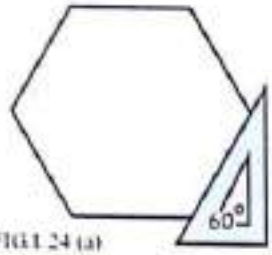

FIG.1.24 (a)

FIG.1.24 (b)

(b) *Refer figure 1.24 (b).*

(i) Taking the length of the side of a hexagon as the radius and its end points as the centres, find the centre of a circle say C. *Refer figure 1.24(b).*

(ii) With centre C and radius equal to the length of a side of the hexagon, draw a circle. Mark the radius around the circumference and draw the required hexagon.

(c) Position of diagonal vertical. *Refer figure 1.25.*

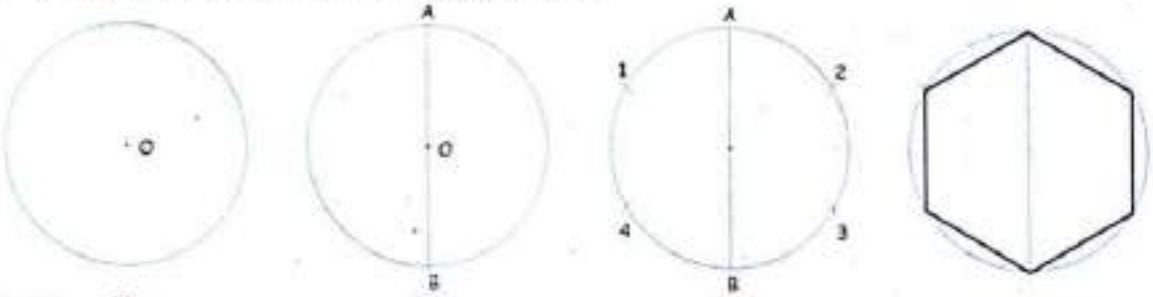

FIG.1.25 (i) (ii) (iii) (iv)

(i) Draw thin circle with centre *O* and radius equal to side of hexagon.

(ii) Draw vertical thin line *AB* as diagonal.

(iii) With centres *A* and *B* and radius equal to side of hexagon mark *1*, *2* and *3*, *4* respectively.

(iv) Join these points to produce regular hexagon.

(d) Position of diagonal horizontal. *Refer figure 1.26.*

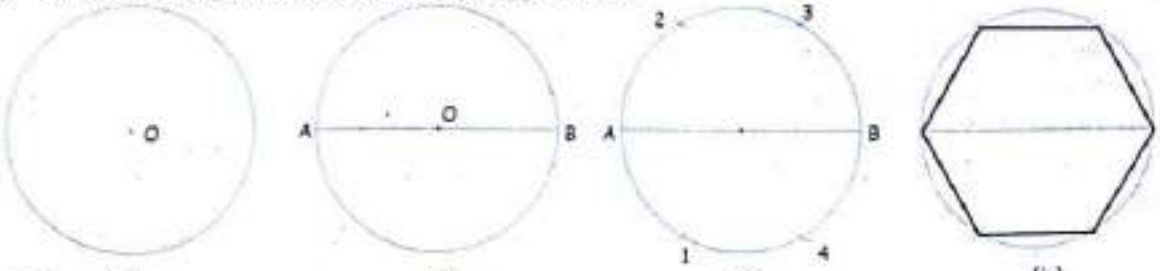

FIG.1.26 (i) (ii) (iii) (iv)

Procedure : Same as above.

Scanned by CamScanner

Note : ***(i)*** *A/C means Across diagonal of hexagon and by geometry diagonal of hexagon is equal to twice the side of hexagon. Refer figure 1.27(a).*

(ii) *A/F means Across Flat which is distance between two parallel lines of hexagon. Refer figure 1.27(b).*

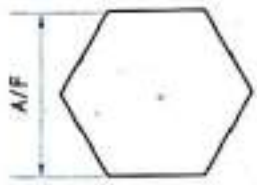

FIG. 1.27(a)

FIG. 1.27(b)

2. *To Construct a Regular Pentagon of Given Length of Side*

(a) *Refer figure 1.28(a).*

(i) Draw the side PQ of a given length.

(ii) Mark the angle 72° with a protractor at both sides.

(iii) With centres P and Q and radius equal to length of side mark T and R respectively as shown.

(iv) With centres R and T and radius equal to length of side mark the apex S.

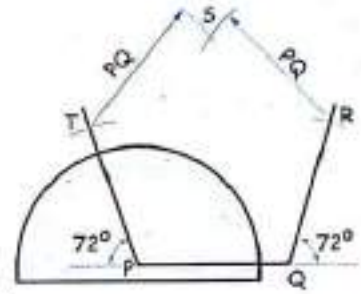

FIG. 1.28(a)

(b) *Refer figure 1.28(b).*

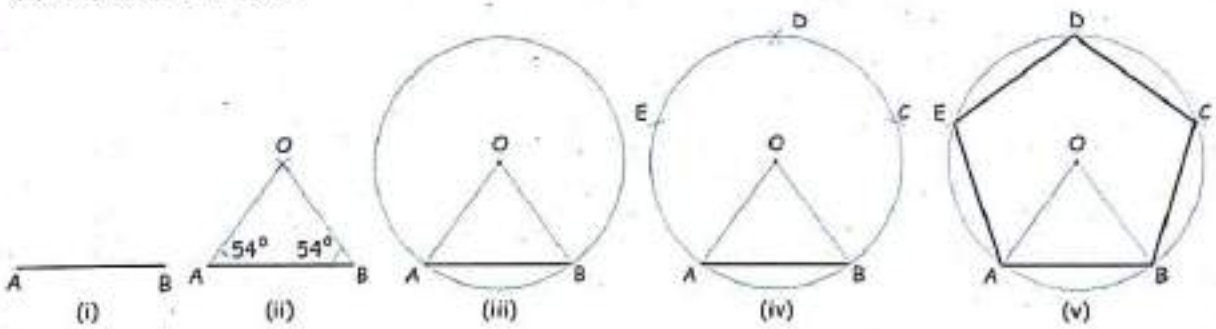

FIG. 1.28(b)

(i) Draw AB equal to the side of pentagon.

(ii) Construct an isosceles triangle OAB with base angle 54°.

(iii) Draw thin circle with centre O and radius as OA.

(iv) With radius equal to AB cut the circle successively at C, D and E.

(v) Join these points to produce regular pentagon.

Scanned by CamScanner

2 ENGINEERING CURVES

2.1 Introduction

Generally, an object may have flat surface and curved surface. The application and construction of some of the most important plane curves that are used in engineering practice such as ellipse, parabola, hyperbola, involute, cycloid, spirals, helix, etc.

2.2 Cycloidal Curves

Cycloidal curves are generated by the fixed points on the circumference of a circle, which rolls without slipping along a fixed straight line or a circle.

Rolling Circle : The circle which rolls on a fixed straight line or on another circle is called *rolling circle*. Since it generates the curve, it is also called *generating circle*.

Directing Line : The fixed straight line on which generating circle rolls is called *directing line*.

Directing Circle : A circle on which generating circle rolls is called *directing circle*. Sometimes, directing circle is also called *guiding circle*.

Application : Cycloidal curves are used to draw profile of gear teeth.

2.2.1 Cycloid

It is defined as *the locus traced out by a point on the circumference of a circle which rolls along a straight line without slipping.*

Application of Cycloid

Refer figure 2.1.

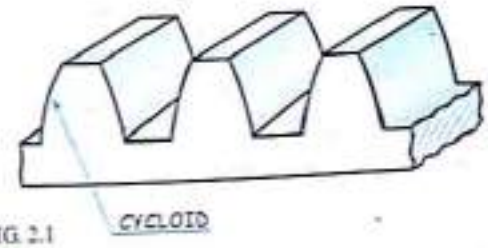

FIG. 2.1

Scanned by CamScanner

Problem 1

A circle of 40 mm diameter rolls along a straight line without slipping. Draw a curve traced by a point on the circumference for one complete revolution of the circle. Name the curve. Draw the tangent and normal to the curve at a point on it 25 mm above the straight line. *(Dec. '97, M.U.)*

Solution

Refer figure 2.2.

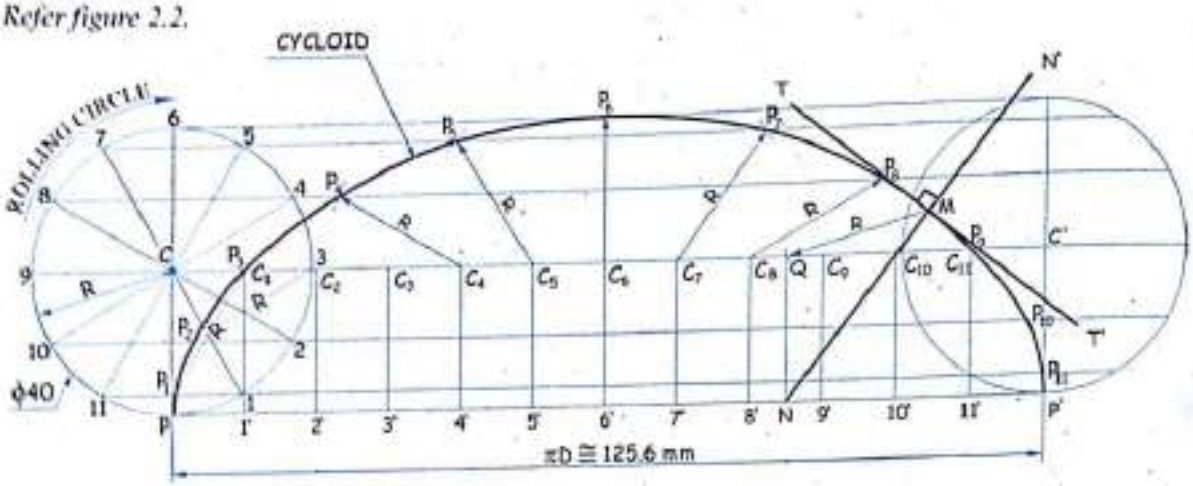

FIG. 2.2

1. Draw a circle of 40 mm diameter and mark its centre as C. Mark point P as a generating point on the circumference of the circle.
2. Draw a directing line PP' tangential and equal to the circumference of the rolling circle.
   i.e. $\pi D = \frac{22}{7} \times 40 \cong 125.6$ mm.
3. Divide the circle and the directing line into same number of equal parts, say 12, and mark the divisions as shown.
4. Draw lines perpendicular to a directing line at the points $1', 2', 3', \ldots$ etc. and mark $C_1, C_2, \ldots$ etc., where it intersects the centre line CC' respectively.
5. Draw the horizontal lines through $1, 2, 3, \ldots$ etc.
6. **Assumption** : If the circle rolls towards right ($1/12^{th}$ of complete rotation), the initial posititon of point P is lifted up to the height of the horizontal line drawn through the point 1 and the initial centre C is shifted to a new centre C_1. So, with centre C_1 and radius = 20 mm (i.e. radius of rolling circle), cut an arc to the horizontal line, which is drawn through the point 1 and mark P_1.
7. Similarly, mark $P_2, P_3, \ldots$ etc. on horizontal lines drawn through $2, 3, \ldots$ etc.
8. Draw a smooth curve through the points $P, P_1, P_2, \ldots P_{11}, P'$. This is the required cycloid.

To Draw a Normal and Tangent to a Cycloid at a Given Point M on It

(i) With centre M and radius $R = 20$ mm (i.e. radius of rolling circle), cut an arc on the centre line CC' and mark Q.

(ii) Through Q draw a perpendicular line to the directing line PP' and mark N.

(iii) Draw a line through M and N. Then line NMN' is the required normal to the cycloid.

(iv) Draw TMT' perpendicular to NMN', through M as the required tangent to the cycloid.

Scanned by CamScanner

Problem 2

An equilateral triangle *PQR* of side 60 mm inscribed in a circle (i.e. circumcircle) rolls without slipping along a straight line at 30° to the horizontal.

Trace the path of vertices *P*, *Q* and *R* for one complete revolution. Assume initial position of the vertex point '*P*' in contact with the horizontal line.

Solution

Refer figure 2.3.

It is self explanatory.

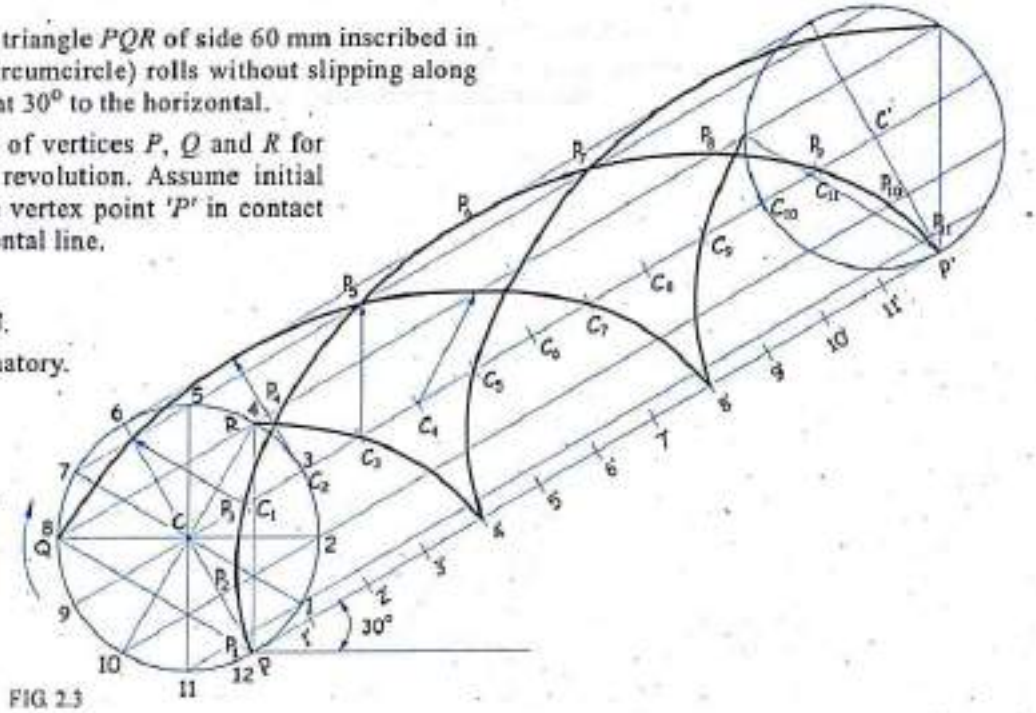

FIG. 2.3

Problem 3

A circle of 50 mm diameter rolls along a straight line without slipping, draw the curve traced by a point '*P*' on the circumference of the circle for one complete revolution. ***(Dec. '10, M.U.)***

Solution

Refer figure 2.4.

It is self explanatory.

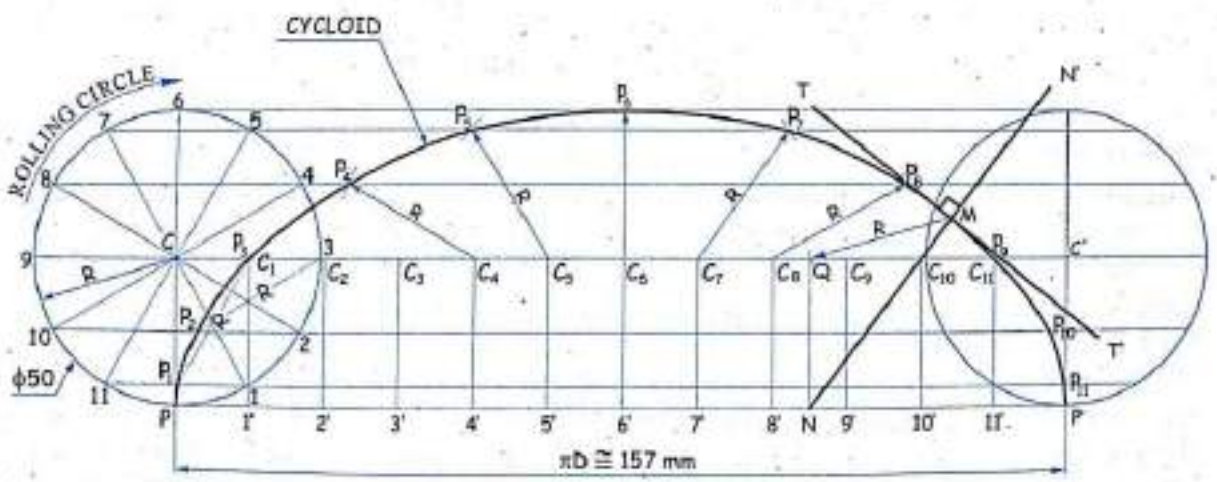

FIG. 2.4

Scanned by CamScanner

Problem 4

A wheel of 56 mm diameter rolls downwards on a vertical wall for half a revolution and then on the horizontal floor for half a revolution. Draw the locus of a point *P* on the circumference of the wheel, the initial position of which is the contact point with the wall. Name the curve. ***(May '93, M.U.)***

Solution

Refer figure 2.5.

It is self explanatory.

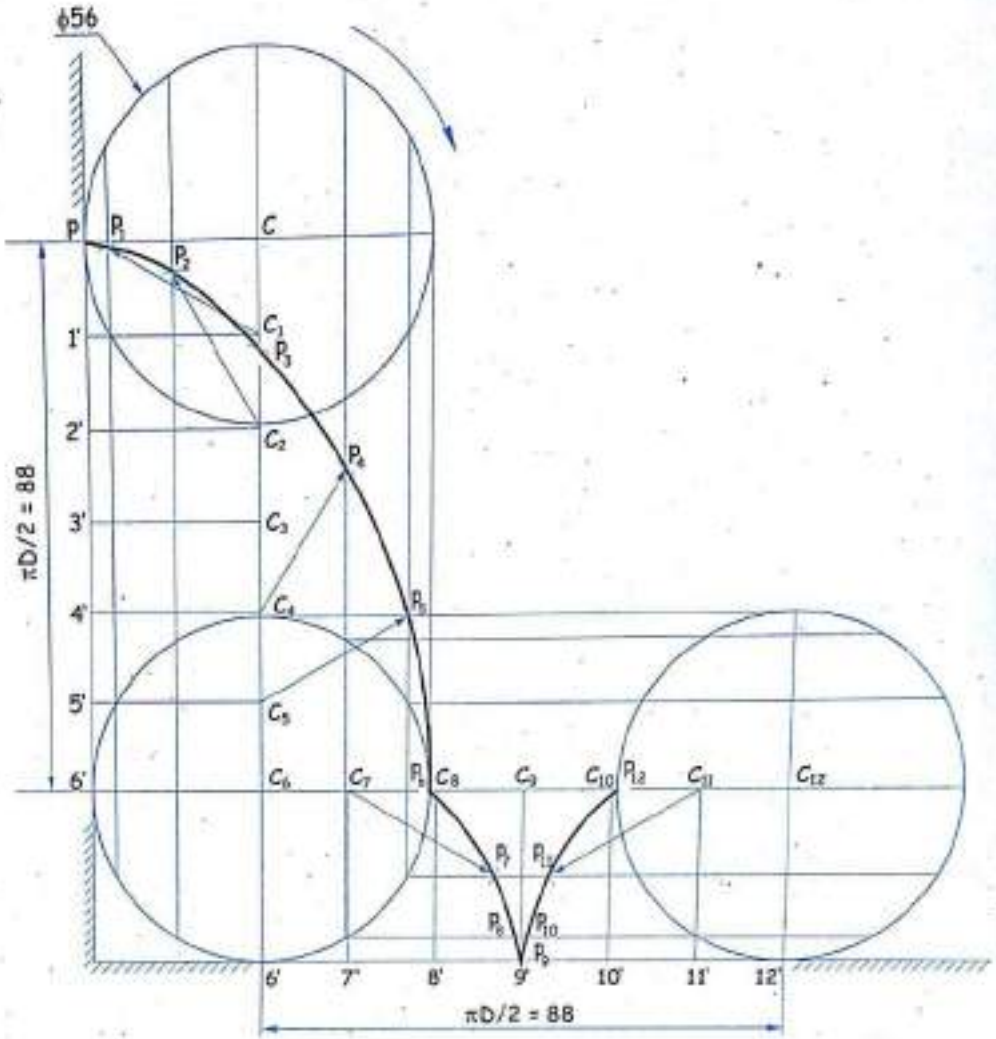

FIG 2.5

Problem 4 (a)

A wheel of 60 mm diameter rolls downwards on a vertical wall for half a revolution and then on the horizontal floor for half a revolution. Draw the locus of a point *P* on the circumference of the wheel, the initial position of which is the contact point with the wall. Name the curve. ***(June '01, M.U.)***

Solution

Refer similar solved problem 4.

Problem 4 (b)

A wheel of 42 mm diameter rolls downwards on the vertical wall by half revolution and then on the floor by half revolution without slipping. Draw the locus of point *P* on the circumference of the wheel with the wall. ***(Nov. '04, M.U.)***

Solution

Refer similar solved problem 4.

Scanned by CamScanner

Problem 5

A circle of 50 mm diameter rolls on a horizontal line for half a revolution and then on a vertical line for another half a revolution without slipping. Draw the curve traced by point *P* on the circumference of a circle, considering the initial position of point *P* on the top of a rolling circle.

Solution

Refer figure 2.6.

It is self explanatory.

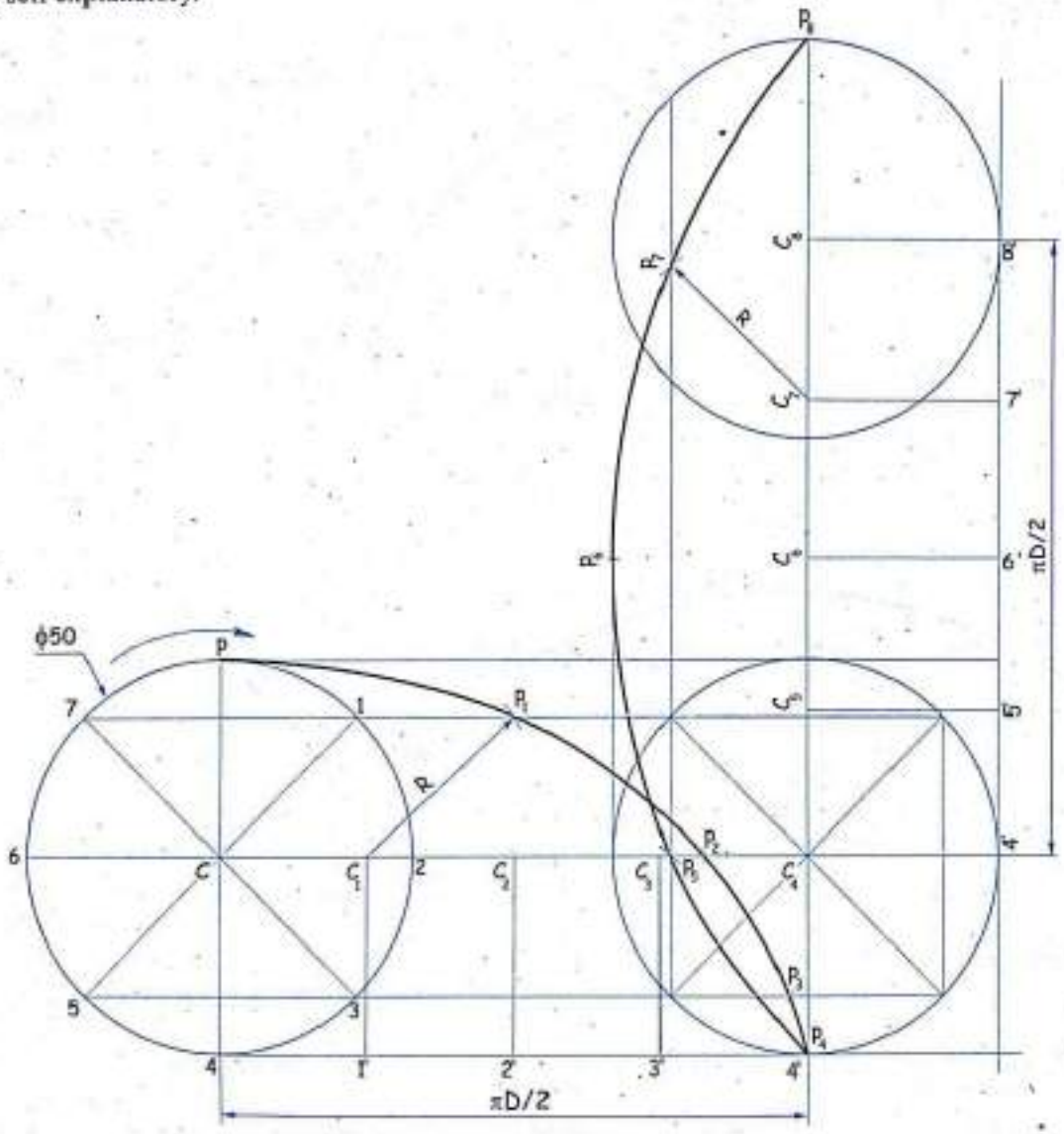

FIG. 2.6

Scanned by CamScanner

Problem 6

A circle of 50 mm diameter rolls along a horizontal straight line without slipping. Draw the curve traced out by the point *P* on the circumference, for one complete revolution of a circle. Point *A* is also on the circumference, but initially in contact with horizontal straight line and point *P* is 40 mm away from the point *A*. Name the curve and trace the path of point *P*. ***(Jan. '03, M.U.)***

Solution

Refer figure 2.7 (a) or 2.7 (b).

It is self explanatory.

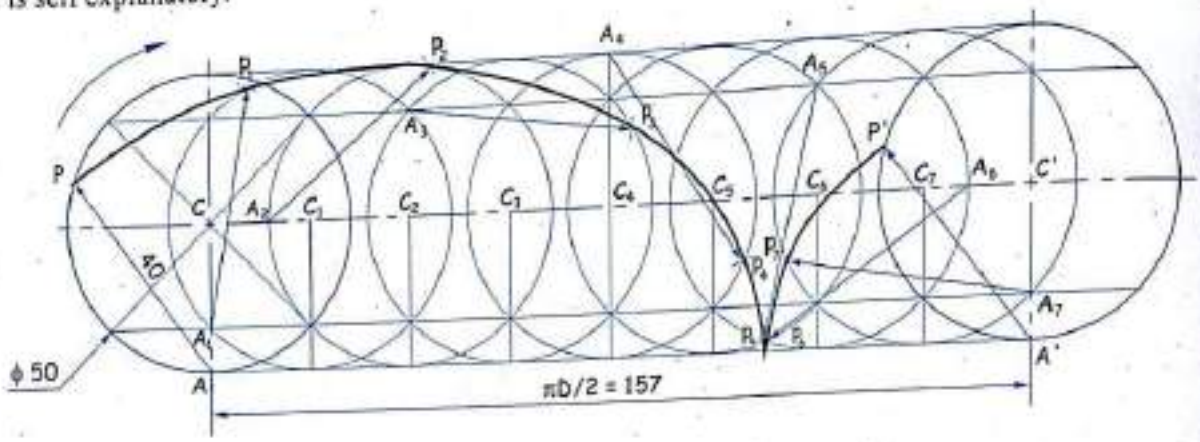

FIG. 2.7 (a)

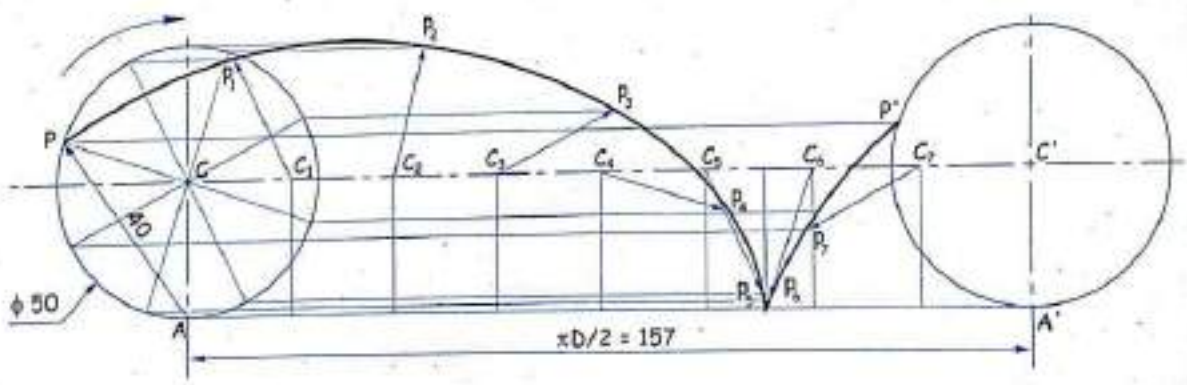

FIG. 2.7 (b)

Hint 1 : *Figure 2.7 (a). Locus of point 'A' will be the centres and with radius equal to 40 mm, cut the arcs on the circumference of a corresponding circle.*

Hint 2 : *Figure 2.7 (b). With reference to point 'P', divide the circle into equal parts (say 8) and draw the projection lines through each division. With the centres $C_1, C_2, \ldots$ and radius equal to 25 mm, cut an arc on the respective horizontal projection line.*

Scanned by CamScanner

2.3 Involute

It is defined as *a curve traced out by an end of a piece of thread unwound from (or wound on) a circle or a polygon keeping the thread always tight.*

OR

It is also defined as *a curve traced out by a point on the straight line which rolls without slipping around a circle or a polygon.*

Application : Involute curves are used to draw a profile of gear teeth.

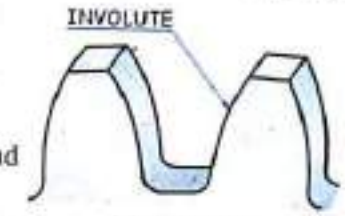

Gear Teeth

Problem 7

Draw an involute of a square of side 20 mm. Also draw tangent and normal through any point on the curve.

Solution

Refer figure 2.8.

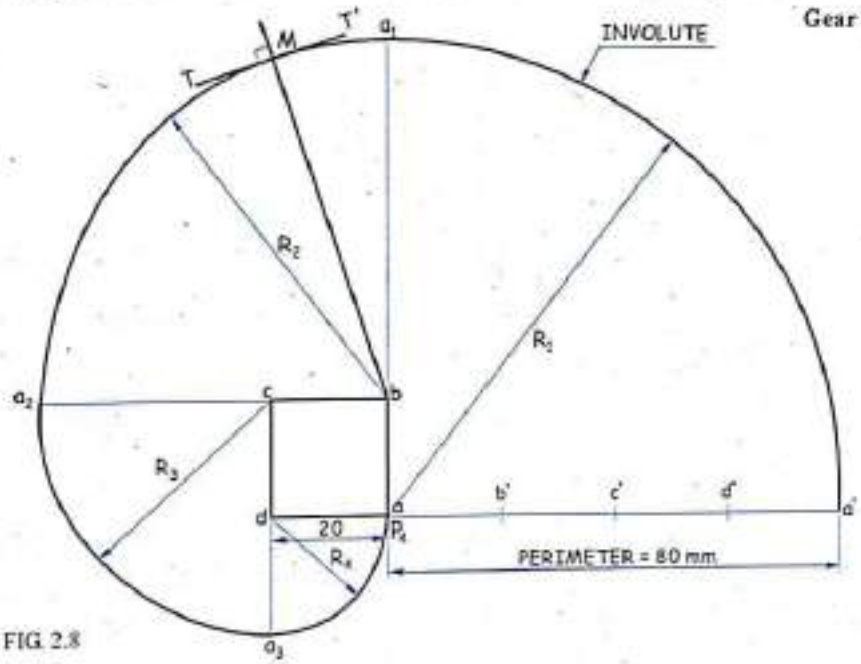

FIG. 2.8

1. Draw a square *abcd* of side 20 mm.
2. As the perimeter of a square is side × 4, i.e. 20 × 4 = 80 mm. Draw the line aa' = 80 mm shown.
3. Divide aa' into 4 equal parts and name the points as b', c', d'.
4. With centre a and radius equal to aa' (R_1) = 80 mm, draw an arc to cut the extended line ab and mark point a_1.
5. Similarly, with centres b, c and d, and radius $b'a'$, $c'a'$ and $d'a'$, draw arcs to cut the extended line bc, cd, da and mark a_2, a_3 and a respectively as shown (i.e. $b'a'$ (R_2) = 60 mm; $c'a'$ (R_3) = 40 mm; $d'a'$ (R_4) = 20 mm).
6. Draw a smooth curve passing through the points a', a_1, a_2, a_3, a, which is the required involute. Here the smooth curve is the combination of sector of circles drawn in proper sequence having different centres (i.e. a, b, c, d) and corresponding radiuses (i.e. R_1, R_2, R_3, R_4).

To Draw a Normal and Tangent to an Involute at a Given Point M on it.

If point M is lying in a sector of circle a_1ba_2 then join b to M which represents the normal to the curve at M and add the tangent TMT' perpendicular to normal passing through point M.

Scanned by CamScanner

Problem 8

Draw an involute of a regular pentagon having side 35 mm.

Solution

Refer figure 2.9.

It is self explanatory.

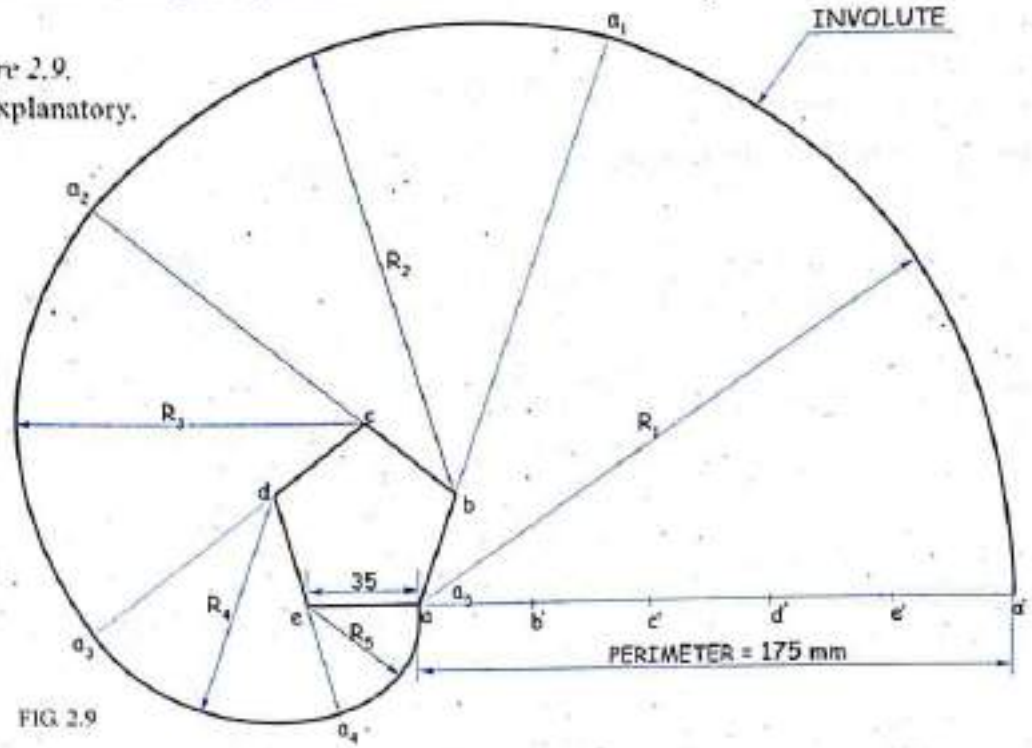

FIG. 2.9

Problem 9

Draw an involute of a hexagon of side 25 mm. ***(Nov. '85, M.U.)***

Solution

Refer figure 2.10.

It is self explanatory.

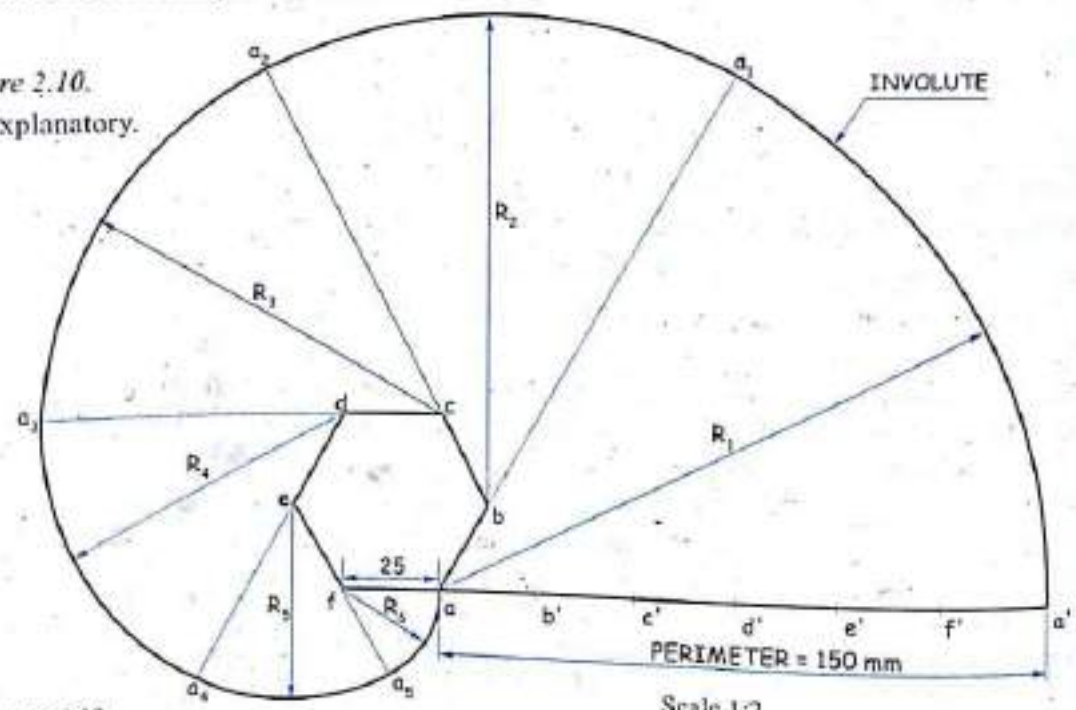

FIG. 2.10

Scale 1:2

Scanned by CamScanner

Problem 10

Draw an involute of a circle of 60 mm diameter. Also draw the normal and tangent at any point on the curve.

Solution

Refer figure 2.11.

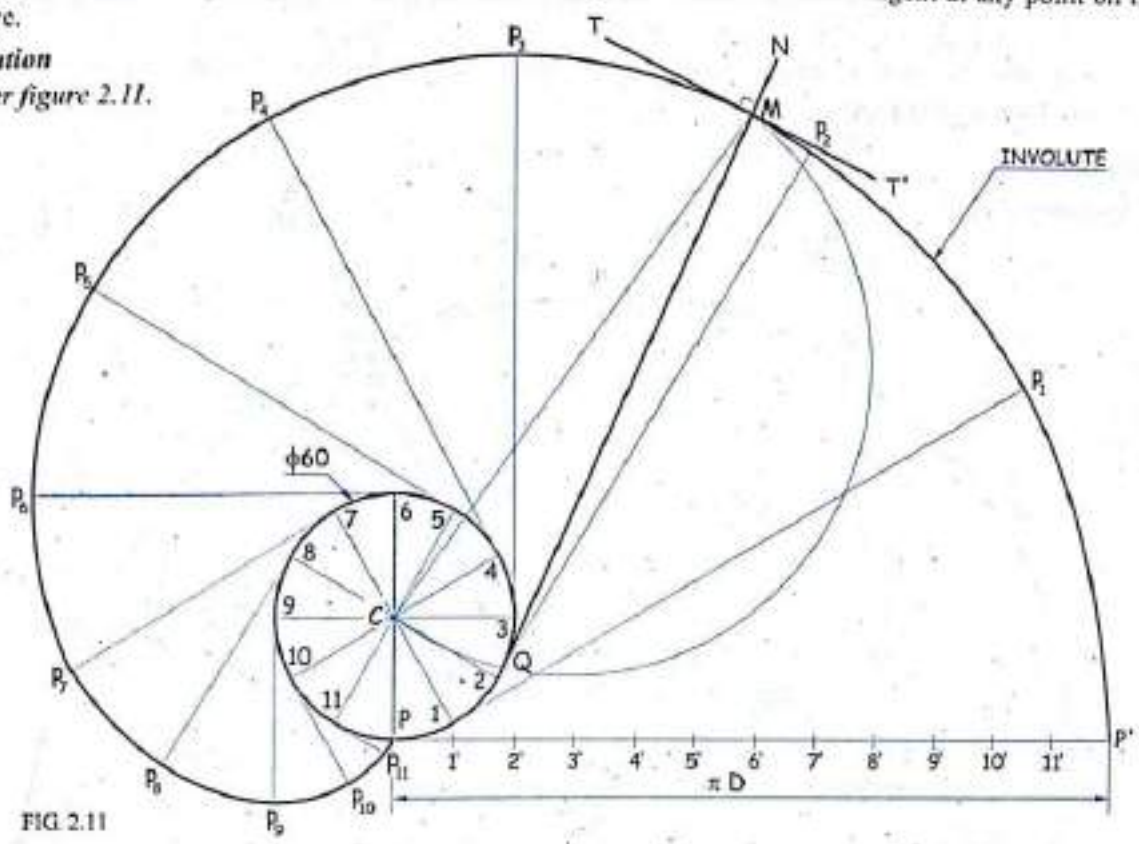

FIG. 2.11

1. Draw a circle of 60 mm diameter, divide it into 12 equal parts and name the points as *1, 2,* ... etc. as shown.
2. Draw a horizontal tangent line to the circle at point *P* having a length equal to the circumference of a circle.

   i.e. $PP' = \pi D = \frac{22}{7} \times 60 \approx 188.5$ mm
3. Divide the circumference of a circle into 12 equal parts and name the points as *1', 2',* . . . etc. as shown.
4. Draw the tangents to the circle at the points *1, 2,* . . . etc.
5. With centre *1* and radius equal to *1'P'*, cut an arc to the tangent drawn through the point *1* and mark P_1.
6. Similarly, with centres *2, 3,* . . . etc. and radius *2'P', 3'P'* . . . etc. mark P_2, P_3, . . . etc., respectively as shown.
7. Draw a smooth curve through the points P', P_1, P_2, . . . P_{11}, P, which is the required involute.

To Draw a Normal and Tangent to an Involute at a Given Point M on it

1. Draw a line joining *M* with *C*.
2. Draw a semicircle with *CM* as a diameter and mark *Q* where semicircle intersects the circle.
3. Draw a line through *Q* and *M*. Then line *QMN* is the required normal line to the involute.
4. Draw *TMT'* perpendicular to *QMN* through *M* as the required tangent line to the involute.

Scanned by CamScanner

Problem 11

An inelastic string 150 mm long, has its one end attached to the circumference of a circular disc of 40 mm diameter. Draw a curve traced out by the other end of the string, when it is completely wound around the disc, keeping the string always tight. Name the curve. Also draw a tangent and a normal to the curve through any point.

Solution

Refer figure 2.12.

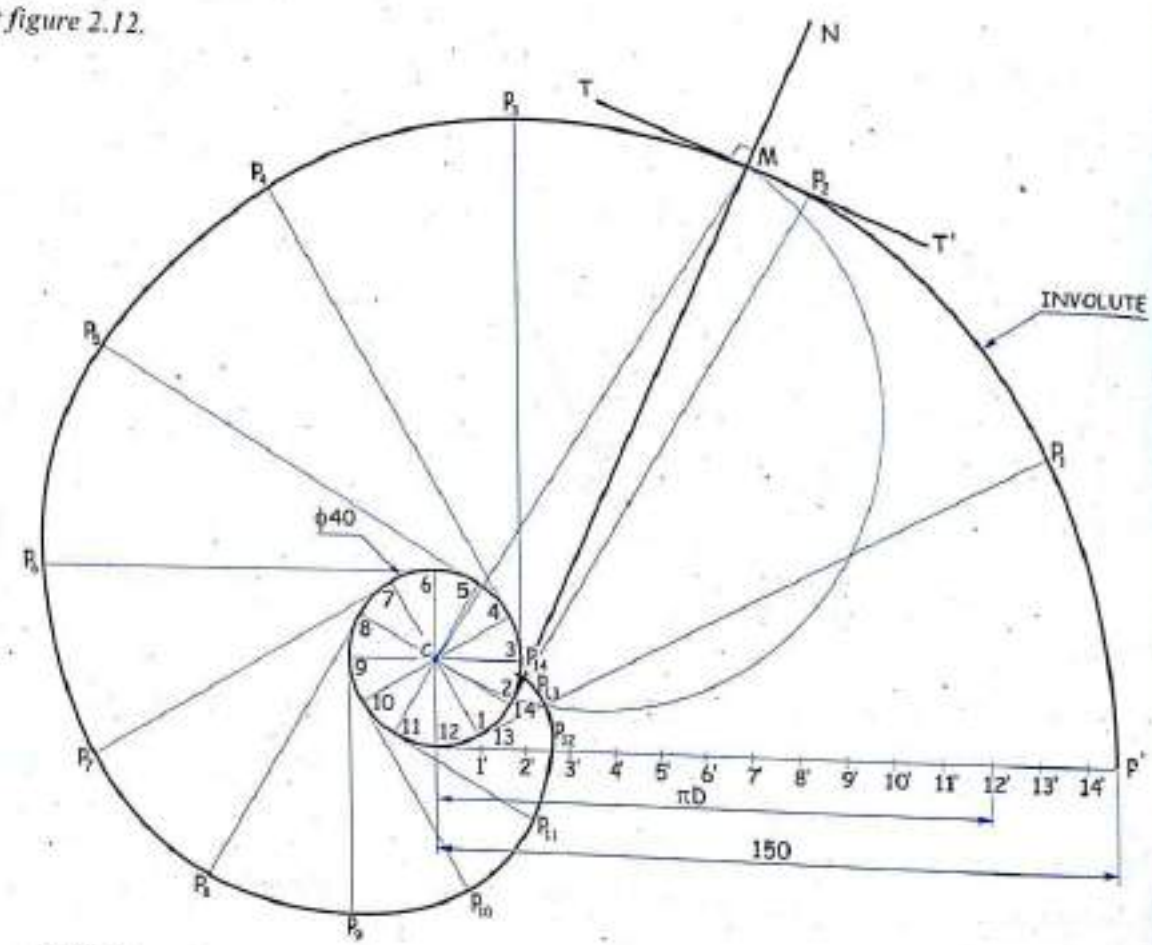

FIG. 2.12

1. Calculate the circumference length of the circular disc, i.e. $\pi D = \pi \times 40 \approx 125.6$ mm. Since the length of the string (150 mm) is longer than the circumference length, so it will wound more than one circumference length of a disc. After taking 12 equal divisions of circumference length, extend the marking of equal division and name the points as *1'*, *2'*, . . . *12'*, *13'*, *14'*, *P'* as shown.
2. With centre *1* and radius equal to *1'P'*, cut an arc to the tangent drawn through *1* and mark P_1.
3. Similarly with centres *2*, *3*, . . . etc. and radius *2'P'*, *3'P'* . . . etc., mark P_2, P_3, . . . etc., respectively as shown.
4. Draw a smooth curve through the points P', P_1, P_2, . . . P_{11}, P_{12}, P_{13}, P_{14}, P, which is the
5. Draw a normal *QMN* and a tangent *TMT'* by usual method.

Scanned by CamScanner

Problem 12

One end of an inelastic string, 125 mm long is attached to the circumference of a circular disc of 50 mm diameter. The free end of the string is wound around the disc, keeping the string always tight. Draw the locus of the free end and name the curve.

Solution

Refer figure 2.13.

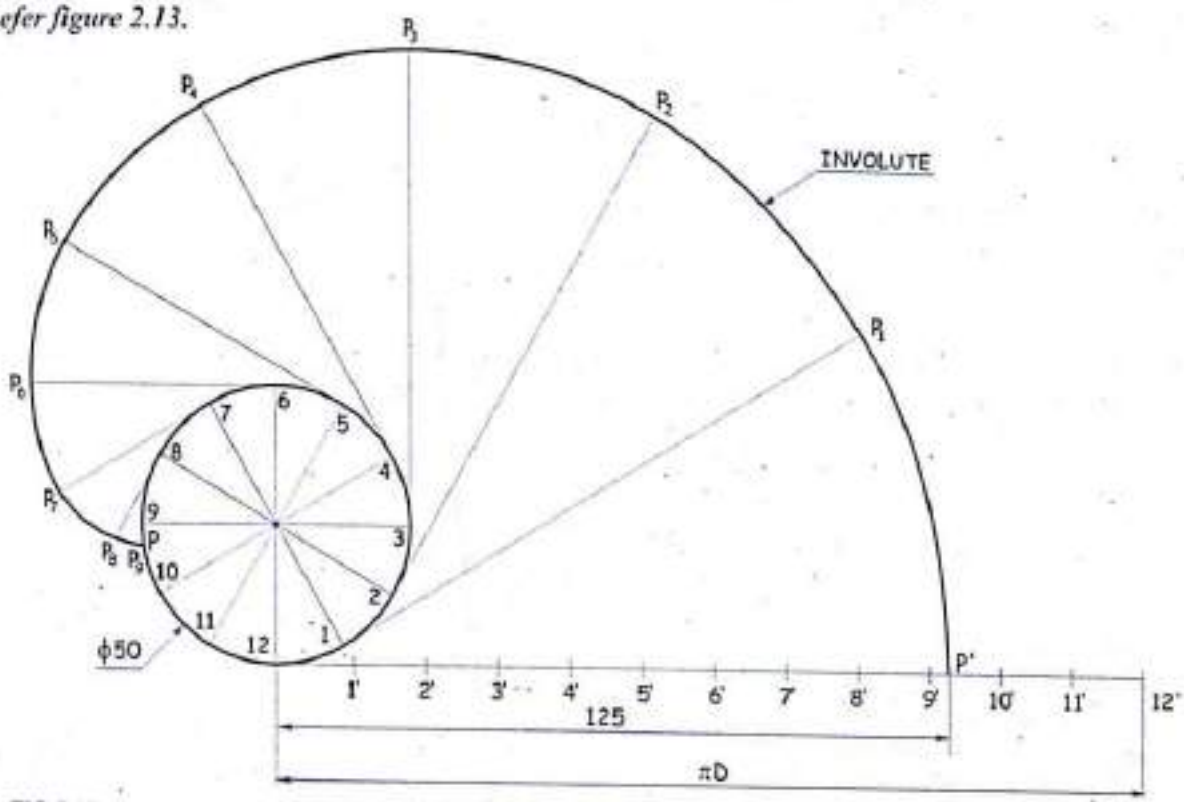

FIG. 2.13

1. Calculate the circumference length of the circular disc, i.e. $\pi D = \pi \times 50 = 157$ mm. Since the length of the string (125 mm) is shorter than the circumference length, so it will wound less than one circumference length of disc. After taking 12 equal divisions of circumference length mark P' at a given distance 125 mm as shown.
2. With centre *1* and radius equal to $1'P'$, cut an arc to the tangent drawn through *1* and mark P_1.
3. Similarly with centres *2, 3, . . .* etc. and radius $2'P'$, $3'P'$ . . . etc., mark P_2, P_3, . . . etc. respectively as shown.
4. Draw a smooth curve through the points $P', P_1, P_2, \ldots P_9, P$, which is the required involute.

Problem 13

An inelastic string of 120 mm long has its one end attached to the circumference of a circular disc of 50 mm diameter. Draw the curve traced out by the other end of the string when it is completely wound round the disc keeping the string always tight. Draw the tangent and normal to the curve at apoint 70 mm from the center of the circular disc. Name the curve. *(May '99, M.U.)*

Solution

Refer similar solved problem 12.

Scanned by CamScanner

Problem 14

A disc in the form of a semicircle and a semi-regular hexagon of thickness 10 mm is shown in the *figure 2.14 (a)*.

A disc is firmly fixed at point *O*. An inelastic string of length 160 mm is fixed at point *A* and the free end *B* of the string is wound round the disc in anticlockwise direction. Draw the locus of *B*. Draw the tangent and normal to the curve at a distance of 110 mm away from pole *O*. Name the curve. ***(May '92, M.U.)***

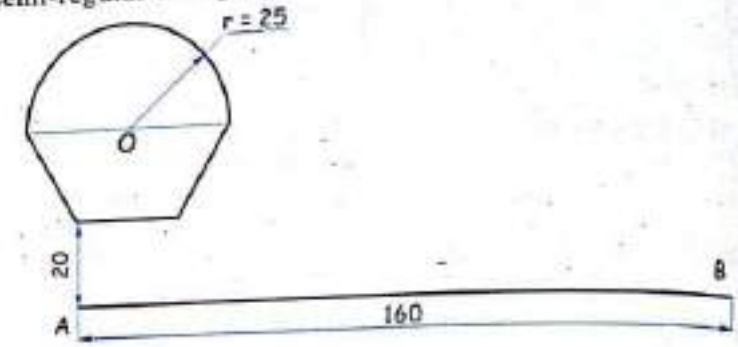

FIG. 2.14(a)

Solution

Refer figure 2.14 (b).

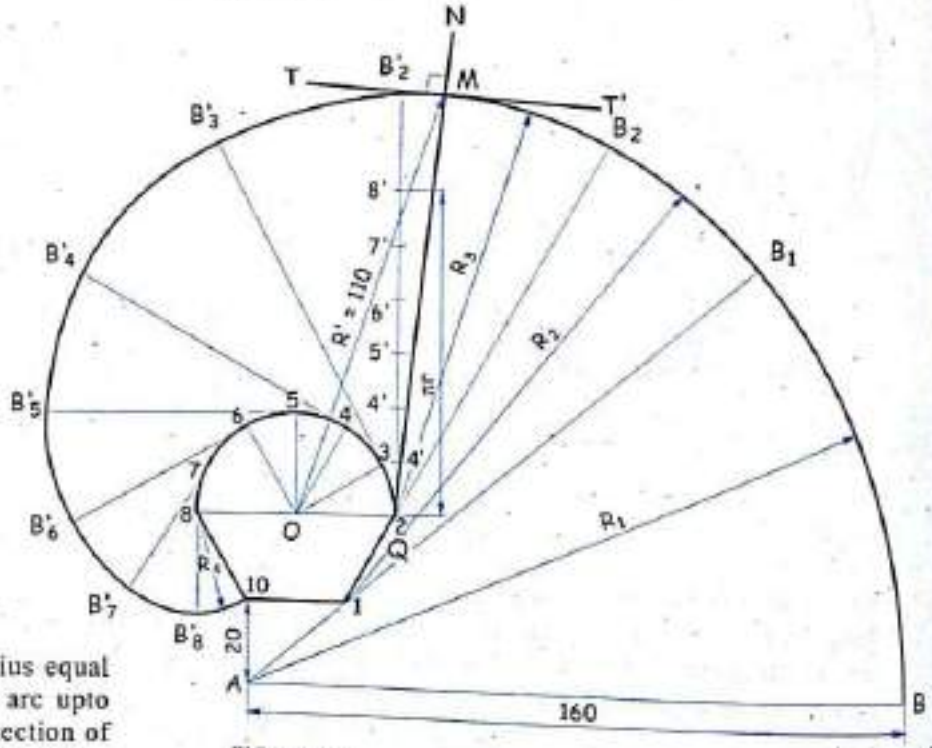

FIG. 2.14(b)

1. Redraw the *figure 2.14 (b)* with scale.
2. With centre *A* and radius equal to *AB* (R_1) = 160 mm, draw an arc upto B_1, which is the intersection of the extended straight line *A1*.
3. With centre *1* and radius equal to $1B_1$ (R_2), draw an arc upto B_2, which is the intersection of the extended straight line *112*.
4. With centre *2* and radius equal to $2B_2$ (R_3) draw an arc upto B'_2 which is the intersection of vertical straight line.
5. Calculate the semi-circumference of semicircle (i.e. πD/2) divide it into 6 equal parts and name the points as shown.
6. Mark the points B_3, B_4, B_5, B_6, B_7, B_8 by usual method.
7. With centre *8* and radius equal to $8B_8$ (R_4) draw an arc till it touches the disc.
8. Join all the points by smooth curve which is the required involute.
9. With centre *O* and radius R' = 110 mm mark *M* on the curve.
10. Draw normal and tangent through point *M* by usual method.

Scanned by CamScanner

Problem 15

Draw the curve traced out by the ends of a straight stick AP, 120 mm long when it rolls without slipping on a semicircle having its diameter AB = 80 mm. Assume, the stick AP to be vertical and tangent to the semicircle initially.

(June '06, M.U.)

Solution

Refer figure 2.15.

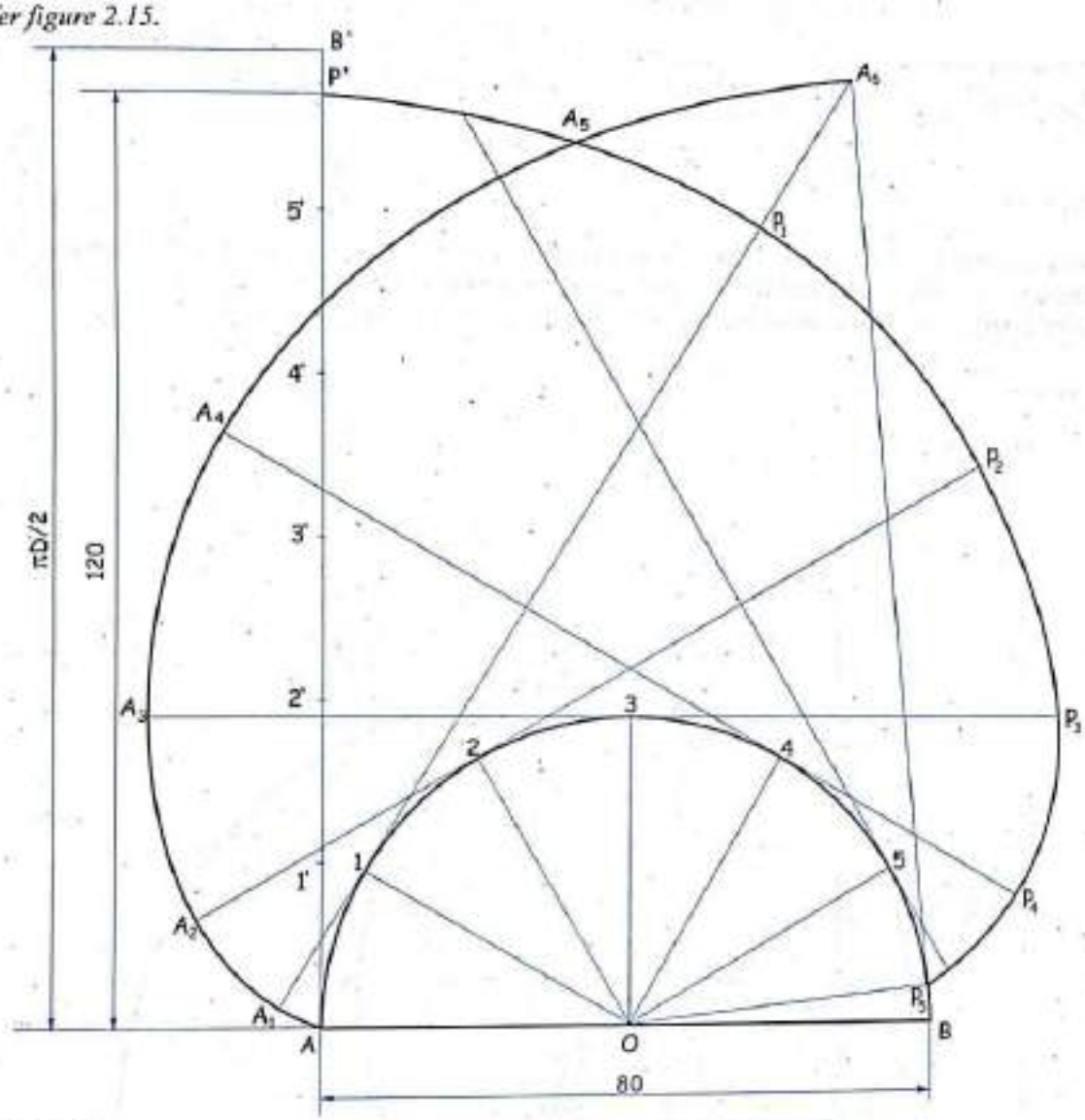

FIG. 2.15

1. Draw a semicircle of diameter AB = 80 mm, divide it into 6 equal parts and name the points as $1, 2, \ldots$ etc. as shown.
2. Draw a vertical tangent line AB' having length $\frac{\pi D}{2}$, i.e. $\frac{\pi \times 80}{2}$ = 125.6 (approx.) and divide it into six equal parts and name the points as $A, 1', 2', \ldots$ etc. as shown.
3. Mark P' on line AB' such that AP' = 120 mm (given).

Scanned by CamScanner

4. With centre 1 and radius equal to $1'A$ mark A_1 on A side of the tangent and with the same centre 1 and radius equal to $1'P'$, mark P_1 on P' side of the tangent drawn through the point 1.
5. Similarly with centres $2, 3, \ldots$ etc. and radius $2'A$, $3'A \ldots$ etc., mark $A_2, A_3, \ldots$ etc. on A side of the tangent and with the same respective centres and radius equal to $2'P'$, $3'P' \ldots$ etc., mark P_2, $P_3, \ldots$ etc. on P' side of tangent drawn through the respective points.
6. Draw the smooth curve through the points $A, A_1, A_2, \ldots A'$ and through the points $P', P_1, P_2, P_3, P_4, P_5, P$ as the required curve traced out by the ends of a straight line AP.

Problem 16

Draw a semicircle of diameter 70 mm, a rod is placed such that it is tangent to the semicircle and perpendicular to the diameter line. The rod is rolling without slipping over the semicircle. Draw the path followed by the two ends of the rod when the length of a rod is 135 mm.

Solution

Refer figure 2.16.

It is self explanatory.

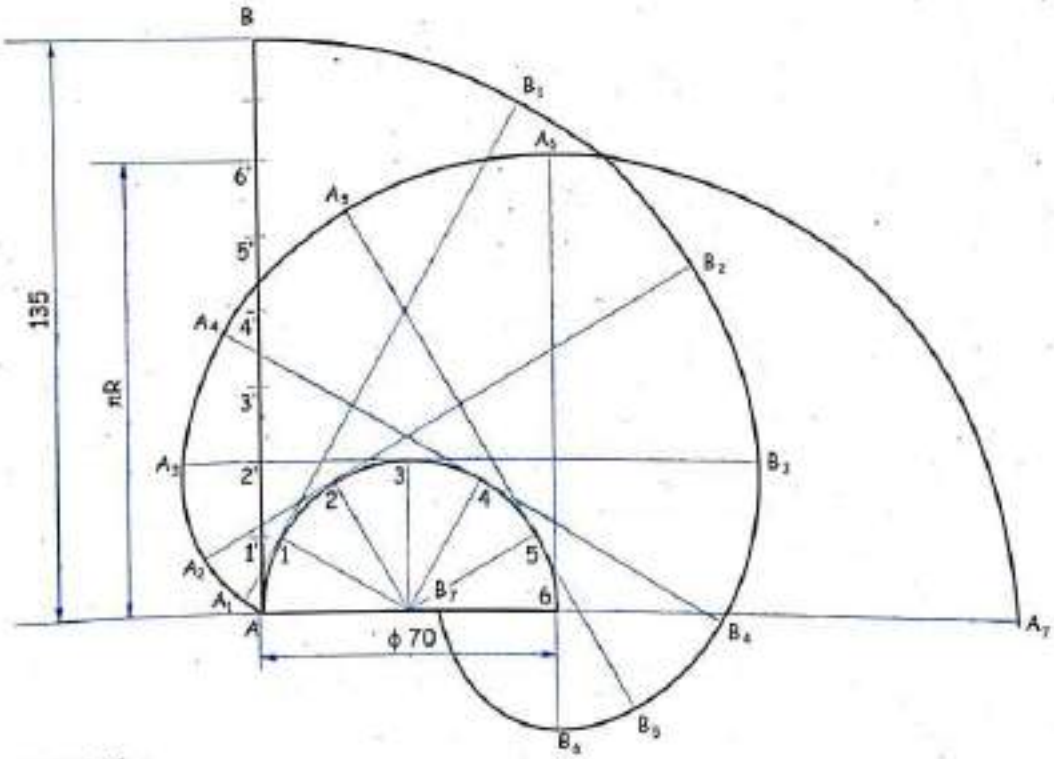

FIG. 2.16

Scanned by CamScanner

Problem 17

Draw a circle with diameter AB, equal to 65 mm. Draw a line AC, tangent to the circle at A and of length 135 mm. Trace the path of end A of the line AC when it rolls on the circle without slipping. Name the curve. Draw the normal and tangent to the curve at a point 100 mm from the centre of a circle.

(May.'94, M.U.)

Solution

Refer figure 2.17.

It is self explanatory.

Anjuman-I-Islam's Kalsekar Technical Campus
Central Library
New Panvel

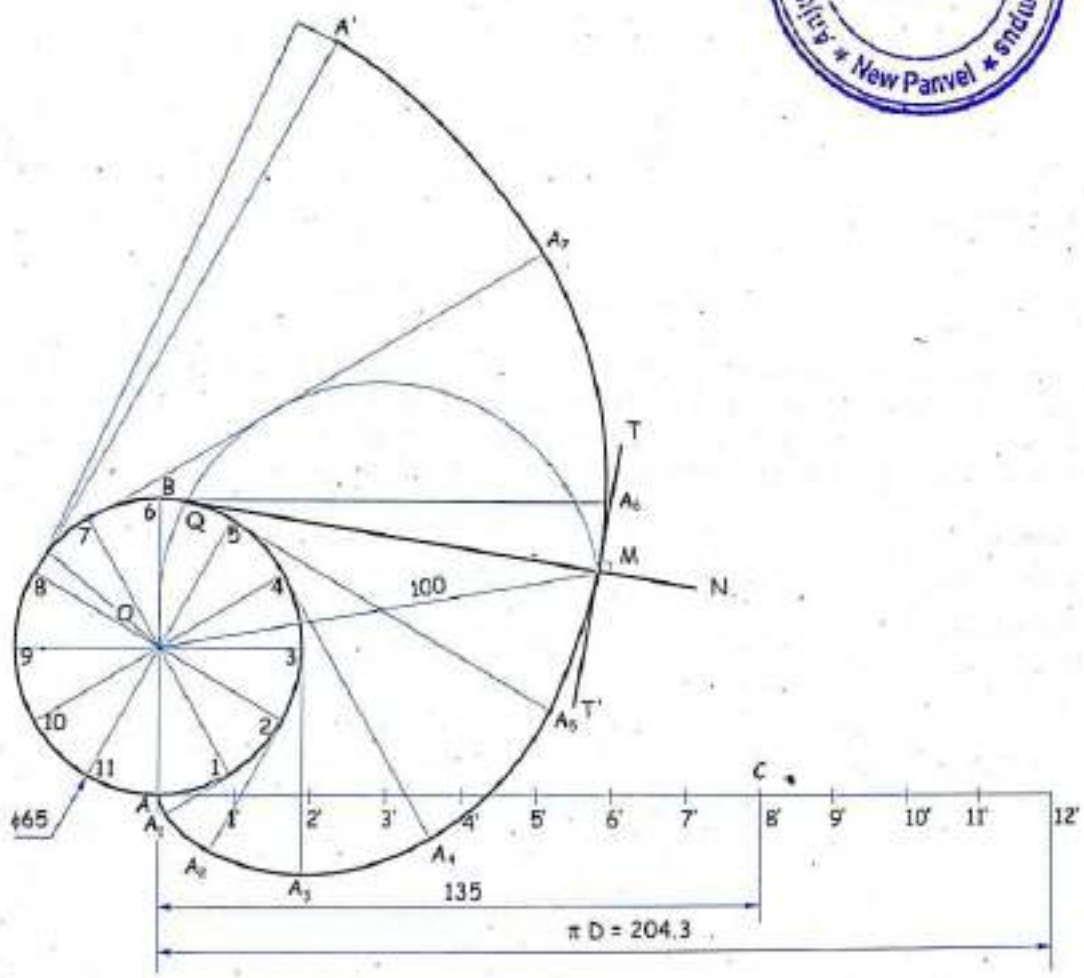

FIG. 2.17

Scanned by CamScanner

Problem 18

A semi circle with *'O'* as centre and 60 mm diameter is fixed as shown in *figure 2.18 (a)*. *'PQ'* is an inelastic string of 130 mm length. End *'Q'* of the string is fixed and is 20 mm above the centre *'O'* and 20 mm on the right side of the centre *'O'*. The string is wound around the semi circle in clockwise direction. Draw the locus of the point *'P'*.

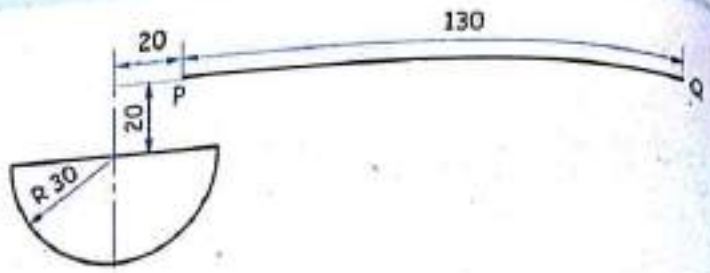

FIG. 2.18 (a)

Solution

Refer figure 2.18 (b).

It is self explanatory.

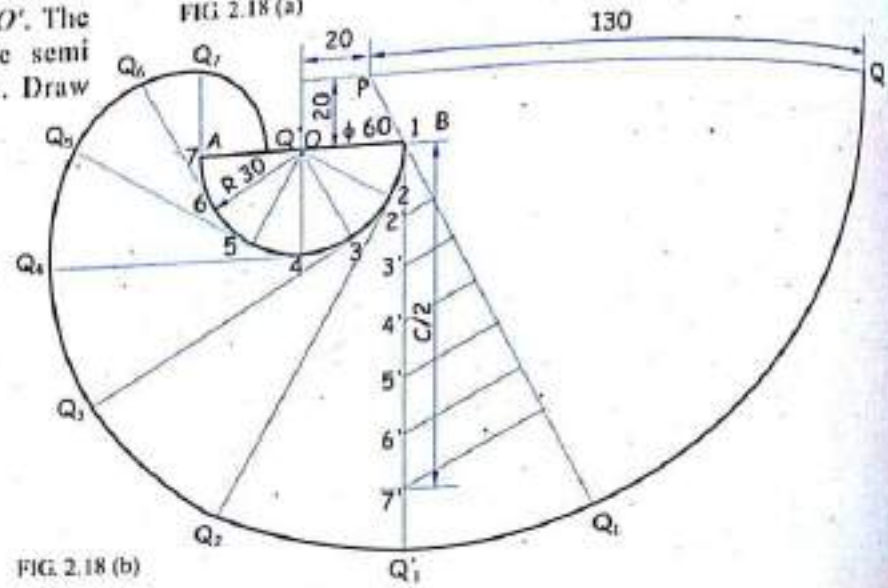

FIG. 2.18 (b)

Problem 19

One end of an inelastic string *AB* 150.5 mm long is attached to the circumference of a half circular, half hexagonal disc 49 mm diameter. Draw the curve traced out by the other end of the string *A* when it is completely wound round the circumference of the disc, keeping the string always tight. Take initial position of the string tangent at the midpoint of the circular portion. ***(May '11, M.U.)***

Solution

Refer figure 2.19.

It is self explanatory.

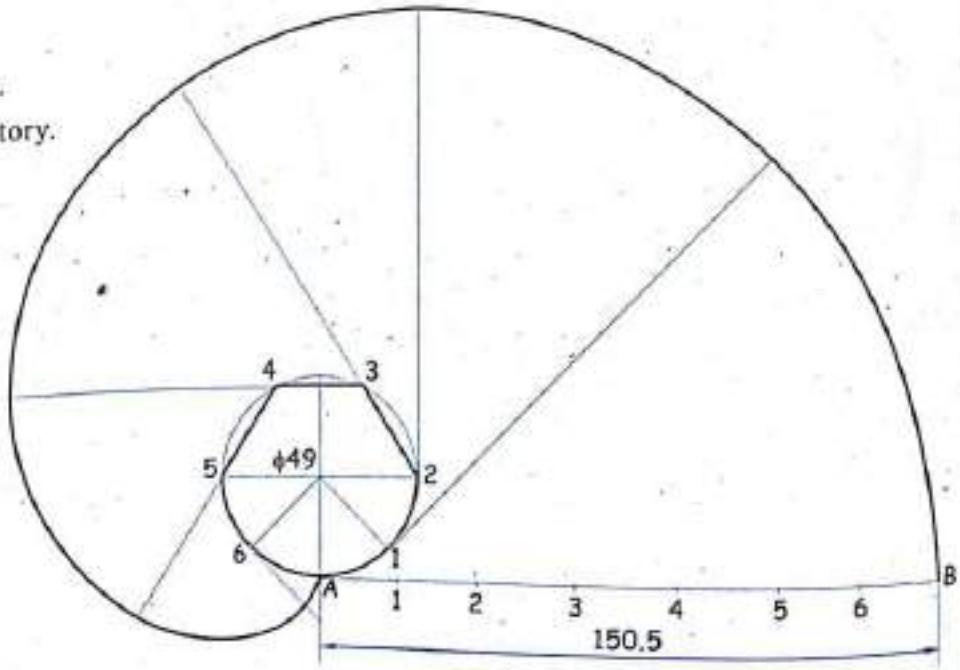

FIG. 2.19

Scanned by CamScanner

2.4 Helix

Cylindrical Helix

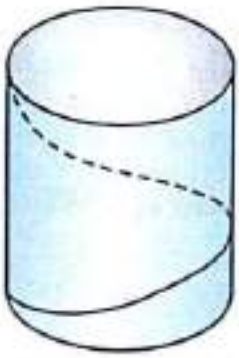

A curve generated by a point, moving around a surface of a right circular cylinder such that its axial advancement is uniform with its movement around the surface of the cylinder is called a *cylindrical helix*.

Pitch : The axial advancement of the point during one complete revolution is known as *pitch of the helix*.

Application of Helix

(i) The screw threads have helical profile.

(ii) The screw jack used for lifting heavy vehicle has a helical profile.

(iii) Helical springs are used in machines, it may be a cylindrical spring or a conical spring.

Problem 20

Draw a helix of pitch equal to 50 mm on a cylinder of 60 mm diameter and develop the surface of the cylinder.

Solution : *Refer figure 2.20.*

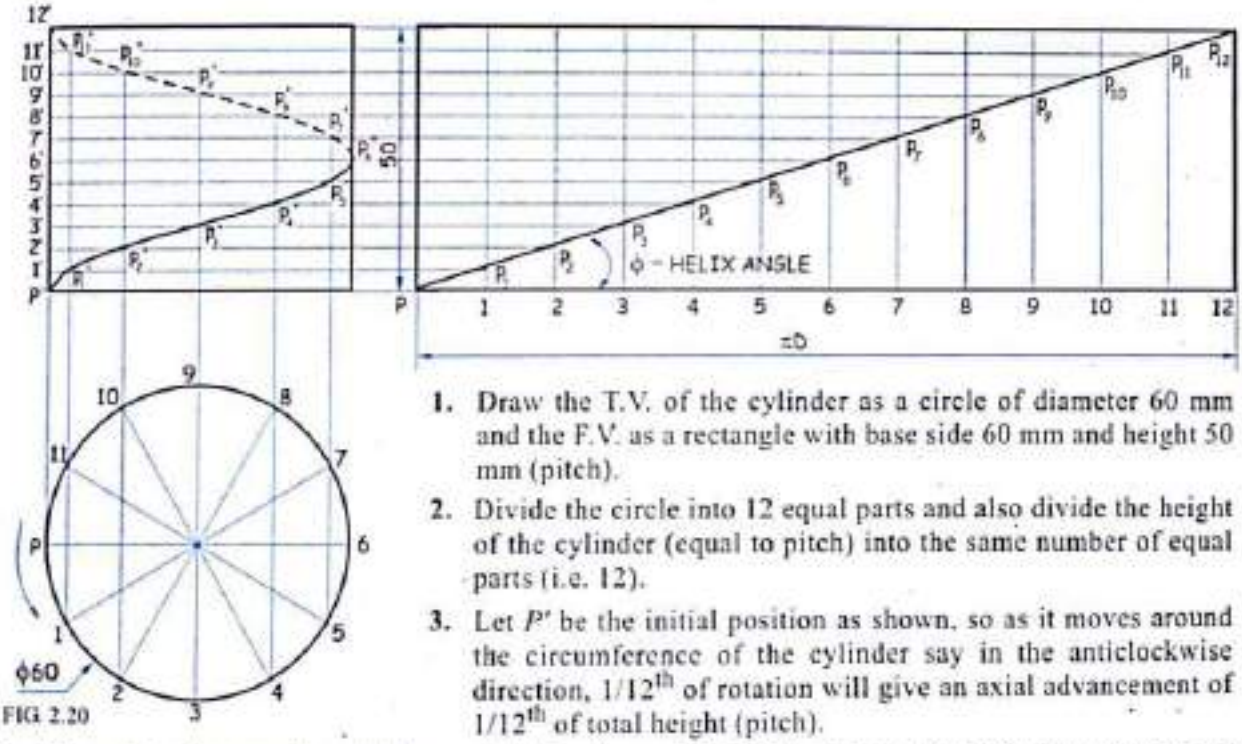

FIG 2.20

1. Draw the T.V. of the cylinder as a circle of diameter 60 mm and the F.V. as a rectangle with base side 60 mm and height 50 mm (pitch).
2. Divide the circle into 12 equal parts and also divide the height of the cylinder (equal to pitch) into the same number of equal parts (i.e. 12).
3. Let P' be the initial position as shown, so as it moves around the circumference of the cylinder say in the anticlockwise direction, $1/12^{th}$ of rotation will give an axial advancement of $1/12^{th}$ of total height (pitch).
4. The point of intersection of the vertical line through 1 (T.V.) and horizontal line through point $1'$ (F.V.) gives P'_1.
5. Repeat the same procedure and mark $P'_2, P'_3, \ldots$ etc.
6. Draw a smooth curve through $P'_1, P'_2, \ldots P'_6$ (visible) and through $P'_6, P'_7, \ldots P'_{12}$ (dotted) to obtain the required helix curve.
7. The right side figure to F.V. is the development of the helix, which is represented by a straight line and is the hypotenuse of right angled triangle with base equal to circumference of a circle, and vertical side equal to the pitch of a helix and angle ϕ is the helix angle.

Scanned by CamScanner

Problem 21

A point P is moving along the curved surface of a cylinder with an uniform speed and parallel to the axis. The cylinder is rotating about its axis with an uniform angular velocity in anticlockwise direction. From bottom of the cylinder, point P is covering a distance of 120 mm in two rotation of the cylinder. Plot the locus of P for two complete rotation of the cylinder. Take the cylinder diameter equal as 60 mm. Name the plotted curve.

Solution

Refer figure 2.21.

It is self explanatory.

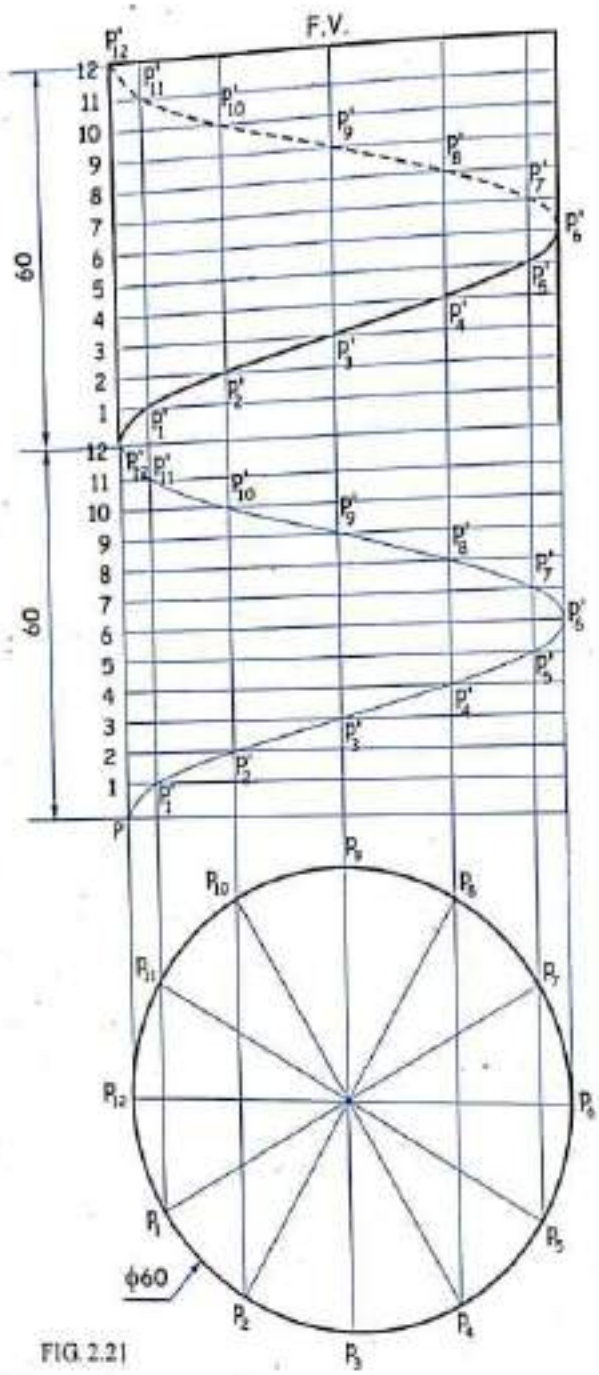

FIG. 2.21

Scanned by CamScanner

Problem 22

A rectangular door $ABCD$ has its vertical edge $AB = 2$ m long and a horizontal edge $BC = 0.8$ m long. It is rotated about the hinged vertical edge AB as the axis and at the same time, a fly X moves from point C towards D and another fly Y moves from A towards D. By the time, the door rotates through 180°, both the flies reach point D. Using suitable scale, trace the paths of the flies in elevation and plan if the motions of the flies and the door are uniform. Name the curve traced out by the flies. Assume the door to be parallel to the V.P. in initial position and the thickness of the door equal to that of your line.

Solution

Refer figure 2.22.

It is self explanatory.

Hint :

Suitable scale taken is 1:20

$AB = 2\ m = 2000\ mm$

$\therefore \quad \dfrac{2000}{20} = 100\ mm\ (AB)$

$BC = 0.8\ m = 800\ mm$

$\therefore \quad \dfrac{800}{20} = 40\ mm\ (BC)$

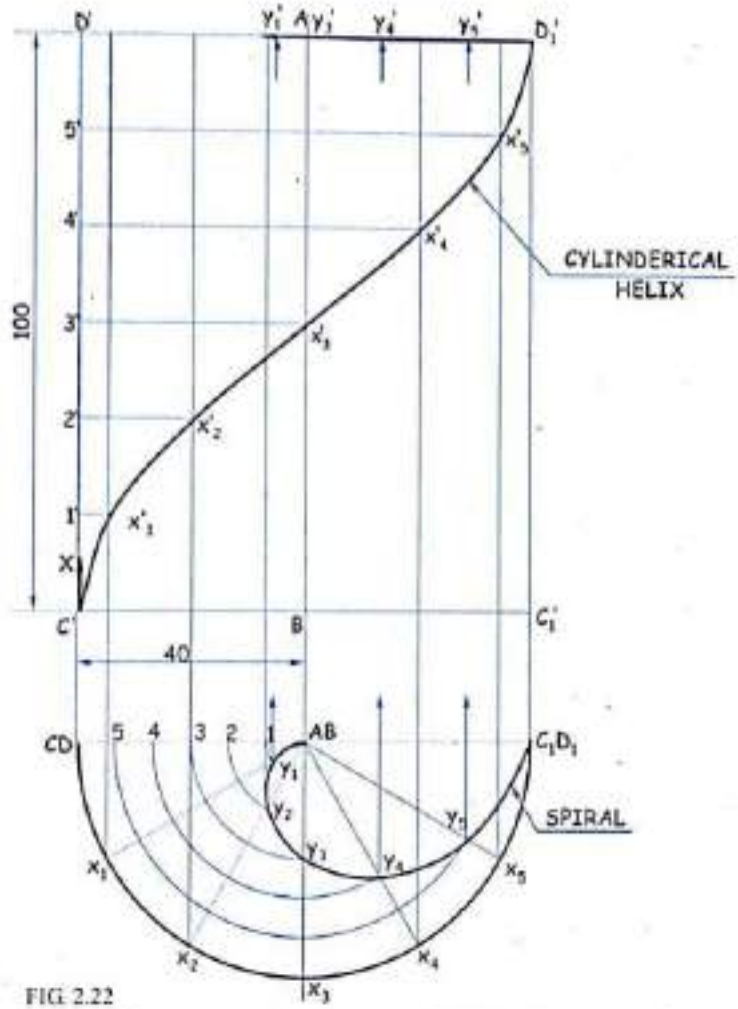

FIG. 2.22

2.5 Exercise

Cycloidal Curves

1. A circle of 60 mm diameter rolls on a straight line without slipping. Draw the locus of point P for one complete revolution of the circle if the point is 30 mm above the straight line and towards the left of the vertical centre line of the circle. Name the curve and draw the tangent and normal at any point on the curve. *(Dec. '88, M.U.)*
2. A circle of 50 mm diameter rolls on a straight line without slipping. Trace the locus of a point on the circumference if the circle rolls for one and half revolution. Name the curve. Draw the tangent and normal to the curve at a point 35 mm above the straight line and on the ascending side of a curve.

Scanned by CamScanner

3. ABC is an equilateral triangle of side equal to 70 mm. Trace the path of the vertices A, B and C when the circle circumscribing ABC rolls without slipping along a fixed straight line for one complete revolution.
4. A circle of 50 mm diameter rolls on a horizontal line for half revolution and then on a line at 30° for another half revolution. Draw a curve traced out by a point on the circumference of a circle.
5. A circle of 60 mm diameter rolls on a straight line without slipping. Draw the locus of point P for one complete revolution of the circle. The point P is 38 mm above the straight line and towards the left of the vertical centre line of a circle. Name the curve and draw the tangent and normal at any point on the curve. *(Dec. '89, M.U.)*
6. A wheel of 50 mm diameter rolls in two stages. For the first half of the revolution of the wheel, it rolls on a vertical straight line. In the second half of the revolution, it rolls on a line inclined at 40° to the vertical. Draw the complete curve traced by a point on the circumference of the wheel.
7. A car travels along a straight road inclined at 30° to the horizontal. Diameter of each wheel of the car is 70 cm. Looking in the direction perpendicular to the plane of motion. Draw the elevation of the path traced by a point on the circumference of the wheel for one complete revolution of the wheel. Name the curve.
8. A circle passing through three corners A, B and C of an equilateral triangle of 50 mm side rolls on a straight line without slipping. Draw a curve traced by a point B and C for one complete revolution if BC is horizontal in initial position. Draw the curve.

Involute

9. A line AB 120 mm long is tangent at the top of a circular disc of 50 mm diameter so that point A is at the top of the circumference of a circle. Then line AB rolls around the circumference of the circular disc in clockwise direction. Draw the locus of the end A till end B touches the circumference of the circular disc. Name the curve.
10. Draw an involute of a hexagon of 30 mm side.
11. Draw an involute of a circle of 40 mm diameter. Draw the tangent and normal to it at a point 100 mm from the centre of a circle.
12. Draw a horizontal line, AB = 40 mm long. Construct a semicircle with AB as a diameter and an equilateral triangle ABC above and below AB respectively. The figure represents the shape of a disc partly semicircular and partly triangular. A string of length equal to periferial length of disc is attached at corner C and wounding is done around the disc. Trace the path of other end of string.
13. Draw a circle with diameter AB equal to 50 mm. Draw a line AC 110 mm long and tangent to the circle. Trace the path of A and C when the line AC rolls on the circle without slipping. Name the curve.
14. One end of an elastic string 100 mm long is attached to the semicircle of diameter 65 mm. Find the locus of the other end of a string if it is wound round the semicircle. Name the curve.
15. Draw a horizontal line AB, 50 mm long. Construct a semicircle with AB as a diameter and half hexagon $ABCD$ (taking AB as a distance between the corner points of hexagon) below and above respectively.

Helix

16. An ant is moving on a vertical cylinder in a circumferential direction at a constant angular speed in clockwise direction as seen axially from the top and the simultaneous uniform rate of advance in the axial direction. If the diameter of the cylinder is 40 mm and the ant moves 60 mm in the axial direction one turn. Draw the path of an ant.
17. Draw a helical spring for a diameter of 60 mm and pitch 60 mm.

Scanned by CamScanner

3 CONCEPT OF PROJECTIONS

3.1 Introduction

Engineering drawing is based on projection drawing, which studies practical methods of representation of points, lines, planes, solids, various objects, parts of machines, instruments and apparatus. Projection drawing is specially important for developing three dimensional visualisation with logical reasoning. To be able to read a complicated drawing, a student must practice and study the fundamentals of projection drawing.

3.2 Projection

The representation of any three dimensional object placed in front of a plane is called the *projection of an object* on a plane. The word projection is of latin origin and means *to throw forward*; thus the projection is a view of an object *thrown* onto a plane by means of straight lines or rays, which are usually drawn through the definitive or significant points of the objects upto where they pierce the plane. The point at which the rays intersect with the plane is called the *projection of points* and the plane is called the *plane of projection*. If all the rays, called *projecting lines* (projectors) emerge from a point *O* (eye), then the projection is called the *central projection* of that object.

3.2.1 Projection of an Object

If an object which is placed in front of a plane of projection, and is observed from a finite distance, the rays from the observers eye will pass through all the points on the contour of an object and intersect the plane of projection. The figure drawn by joining all the points in correct sequence is called the *projection of an object*. The lines from the object to the plane are called *projectors*. *Refer figure 3.1.*

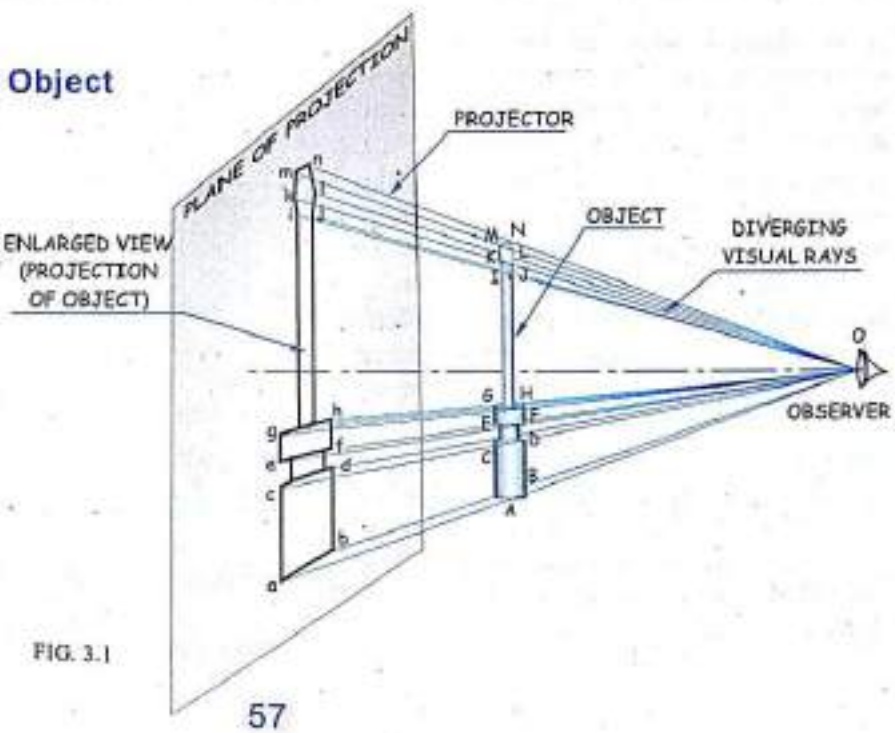

FIG. 3.1

Scanned by CamScanner

3.3 Orthographic Projection

The size of projection of an object will vary depending upon the observer's distance from the plane of a projection, though the actual size of an object is constant. To overcome this inconvenience, orthographic projection is introduced.

Assuming that the observer is at an infinite distance, the projecting lines (projectors) from the eye of an observer to the object becomes parallel to each other and perpendicular to the plane of projection. Since the projectors are perpendicular (i.e. orthogonal) to the plane of projection, the view is called *orthographic view* and the projection method is called the *orthographic projection*. In orthographic projection, the size of the view of an object is equal to the actual size of an object. Since, one view is not sufficient to give the complete idea of an object (its thickness is not shown), minimum two views are required to get an idea of the simple object. But in case of complicated object, sometimes three or more views are required.

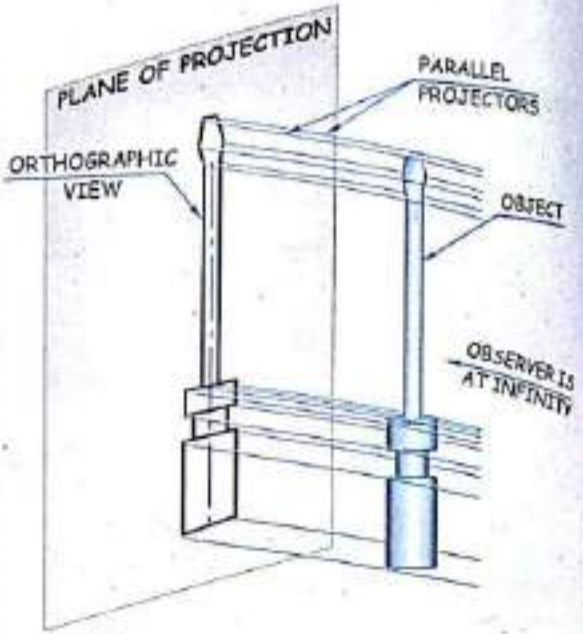

FIG. 3.2

For describing an object, any one methods can be used.

1. Orthographic projection. *Refer figure 3.2.*
2. Isometric projection.
3. Oblique projection.
4. Perspective projection.

3.3.1 Principal Views and Principal Planes of Projection

If an object is observed from front, the orthographic view is called *front view*. Since, the plane of projection is vertical, it is called *vertical plane*.

If an object is observed from top, the orthographic view is called *top view*. Since, the plane of projection is horizontal, it is called *horizontal plane*.

If an object is observed from side (left/right), the orthographic view is called *side view* or *profile view* and its plane of projection is called *profile plane*.

The vertical, horizontal and profile planes are called the *three principal planes of projection*. The views projected on them i.e. front view, top view, and profile view are called *principal views* respectively.

Refer figure 3.3.

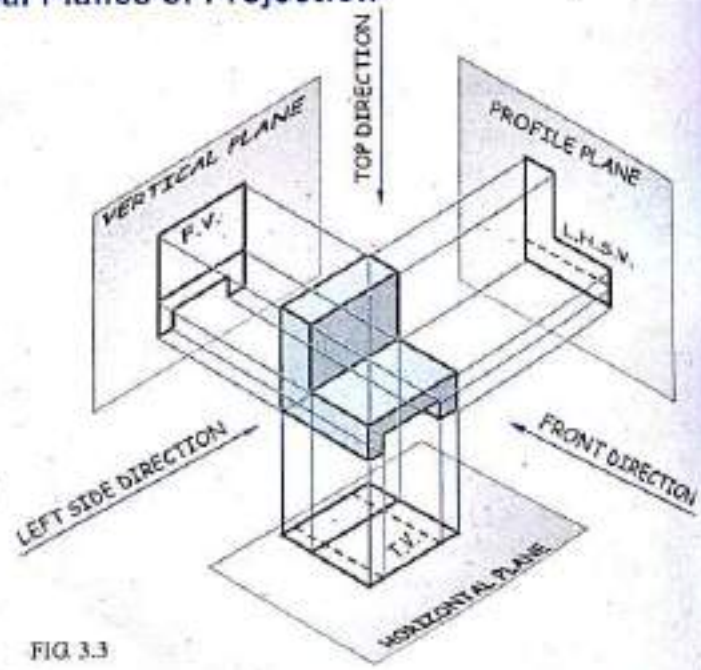

FIG. 3.3

Scanned by CamScanner

Practice of Using the General Terms and Abbreviations

Sr. No.	General Terms	Abbreviation
1.	Vertical Plane or Vertical Reference Plane or Frontal Reference Plane.	V.P. or V.R.P. or F.R.P.
2.	Horizontal Plane or Horizontal Reference Plane.	H.P. or H.R.P.
3.	Profile Plane or Profile Reference Plane or Auxiliary Vertical Plane.	P.P. or P.R.P. or A.V.P.
4.	Front View or Elevation.	F.V.
5.	Top View or Plan.	T.V.
6.	Side View (Left Hand Side View / Right Hand Side View) or Profile View or End View.	S.V. (L.H.S.V. / R.H.S.V.) or P.V. or E.V.

TABLE 3.1

3.4 System of Orthographic Projection

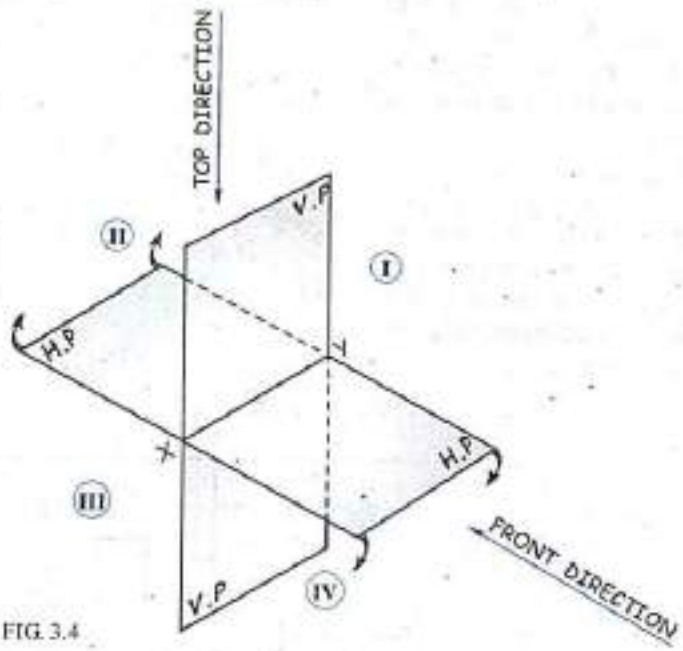

FIG. 3.4

When the vertical plane and horizontal plane intersect at right angle, four quadrants are formed. The line of intersection of the principal planes is termed as *reference line XY*. The four quadrants are numbered as I, II, III and IV. The direction of viewing for the F.V. and T.V. remains same for all the four quadrants. An object is imagined to be situated in each of the quadrant and F.V. and T.V. on the V.P. and the H.P. are obtained respectively. For getting an orthographic view, convention of rotation of planes is to keep the V.P. fixed and the H.P. is to rotate about *XY* by 90° in clockwise direction. So the rotation directs I and III quadrants, the V.P. and the H.P. to lie one below the other. Considering the same convention of rotation, II and IV quadrants, the V.P. and the H.P. will overlap each other. This is the reason, which allows us to follow I quadrant and III quadrant and so called *first angle projection method* and *third angle projection method* respectively. Since, quadrants are formed by the planes, it is also called as *dihedral angle. Refer figure 3.4.*

Scanned by CamScanner

3.4.1 First Angle Projection Method

The object is situated in the 1st quadrant, i.e. the object lies between the observer and the principal planes. The F.V. of an object is projected on the V.P., T.V. of an object is projected on the H.P. and L.H.S.V. of an object is projected on the profile plane (P.P.). The three principal planes, i.e. the V.P., H.P. and P.P. are perpendicular to each other. *Refer figure 3.5.*

In order to make all the three principal planes of projection coplanar (on the same plane), it is convention to fix the V.P., rotate the H.P. about the reference line XO in clockwise direction by 90° and rotate the P.P. about the reference line X_1O by 90°, hence on the drawing sheet on which the views are required to be drawn lies in the same plane.

The T.V. (plan) of an object lies below the F.V. (elevation) and the left hand side view (end view) lies on the right of F.V. The F.V. and T.V. are drawn in vertical alignment. To project the L.H.S.V., draw X_1Y_1 perpendicular to XY line. *Refer figure 3.6.*

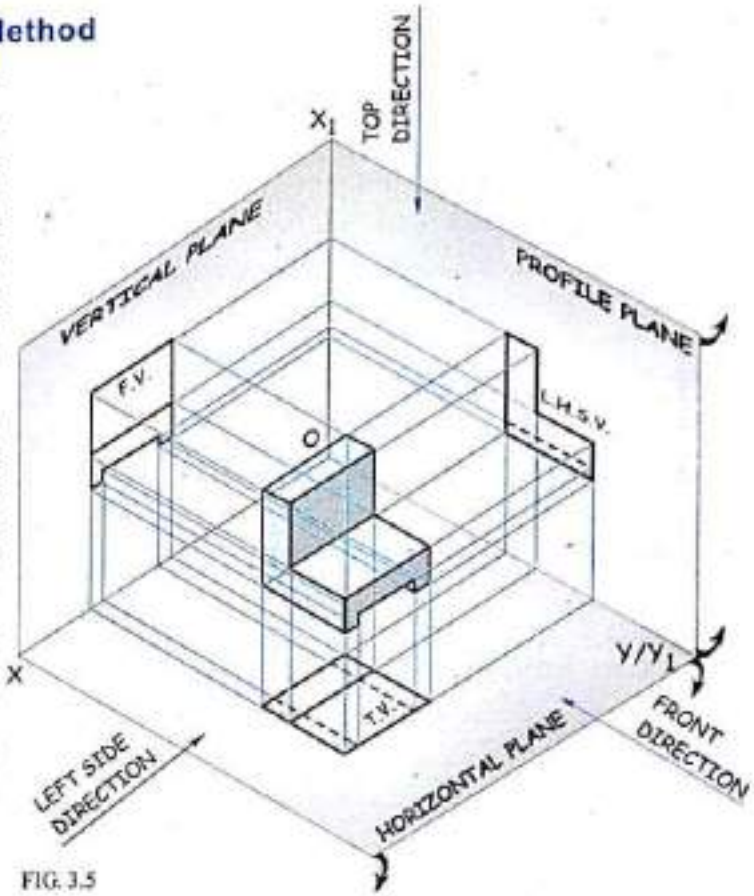

FIG. 3.5

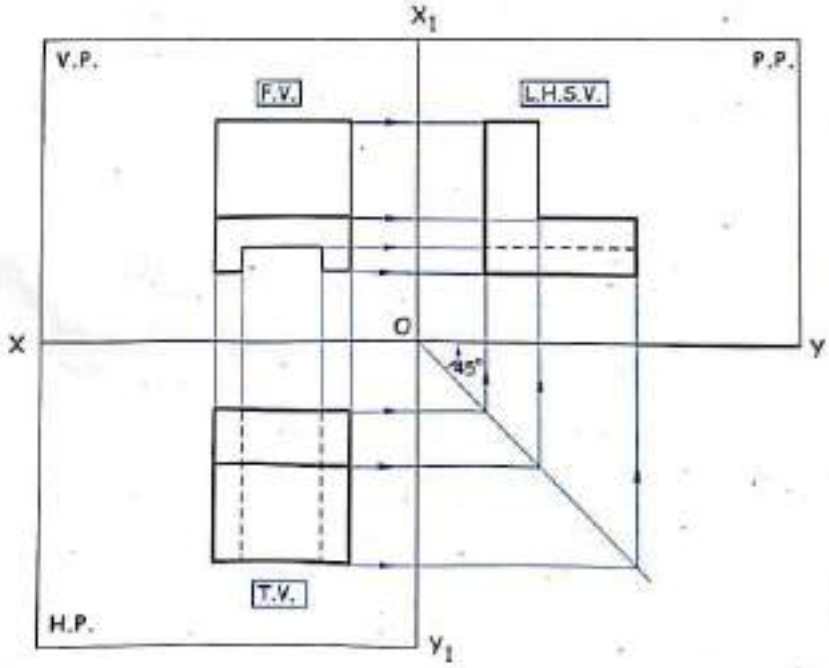

FIG. 3.6

Scanned by CamScanner

Through the point of intersection of XY and X_1Y_1 (i.e. O) draw a 45° line. Draw the horizontal projectors from the T.V. to intersect the 45° line. Through the point of intersection, draw the vertical projectors. Draw the horizontal projectors from the F.V. to intersect the previously drawn vertical projectors and complete the L.H.S.V. The drawing representation of the three views in orthographic projection is shown in *figure 3.7* without boundaries of the principal planes.

***Note :** Hidden edges are shown by dotted lines.*

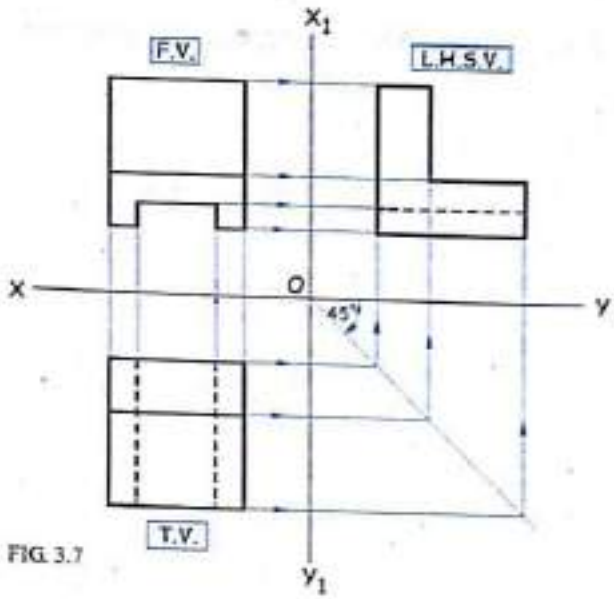

FIG. 3.7

Conclusion *(Refer figure 3.8.)*

1. The object is situated in the first quadrant.
2. The object lies between the observer and the principal planes.
3. The orthographic projection of an object obtained on the V.P. is F.V. and lies above the XY line.
4. The orthographic projection of an object obtained on the H.P. is T.V. and lies below the XY line.
5. The orthographic projection of an object obtained on the P.P. is S.V. and lies on the side of F.V.
   a. L.H.S.V. is drawn on the right side of F.V.
   b. R.H.S.V. is drawn on the left side of F.V.

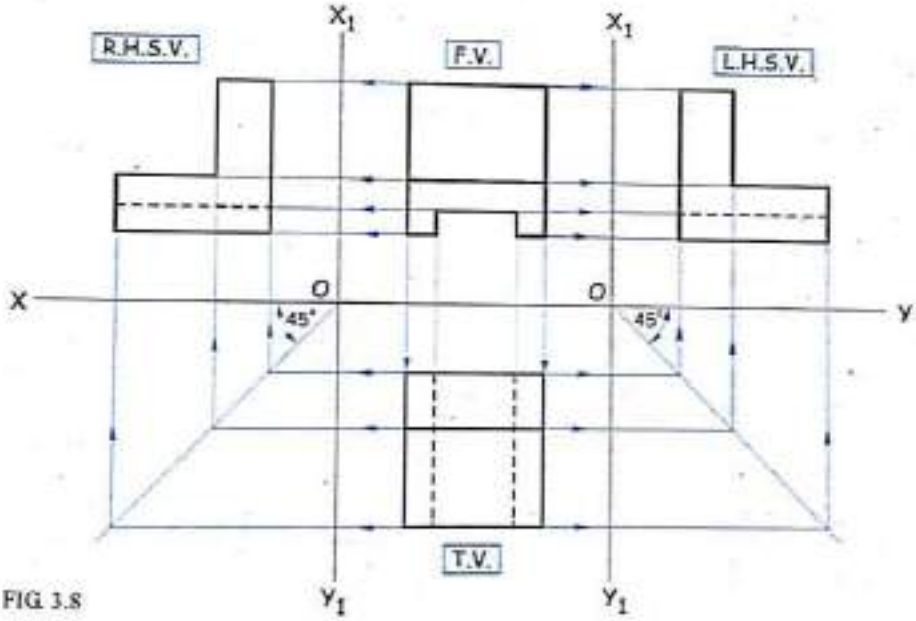

FIG. 3.8

***Note :** First angle projection method had been recommended by the Bureau of Indian Standard in 1991, hence, the first angle projection method is followed in this book.*

Scanned by CamScanner

3.4.2 Third Angle Projection Method

The object is situated in the 3rd quadrant, i.e. the principal planes lies between the observer and the object, and the principal planes are assumed to be transparent. The F.V. of an object is projected on the V.P., the T.V. of an object is projected on the H.P. and L.H.S.V. of an object is projected on the P.P. The three principal planes, i.e. V.P., H.P. and P.P. are perpendicular to each other. *Refer figure 3.9.*

In order to make all the three principal planes of projection coplanar (on the same plane), it is a convention to fix the V.P., rotate the H.P. about the reference line OY in clockwise direction by 90° and rotate the P.P. about the reference line OY_1 by 90°, hence on the drawing sheet on which the views are required to be drawn lies in the same plane. (*Refer figure 3.10*).

The T.V. (plan) of an object lies above the F.V. (elevation) and the left hand side view (end view) lies on the left of F.V. The F.V. and T.V. are drawn in vertical alignment. To project the L.H.S.V., draw X_1Y_1 perpendicular to XY line. Through the point of intersection of XY and X_1Y_1, (i.e. O) draw a 45° line. Draw the horizontal projectors from the T.V. to intersect the 45° line.

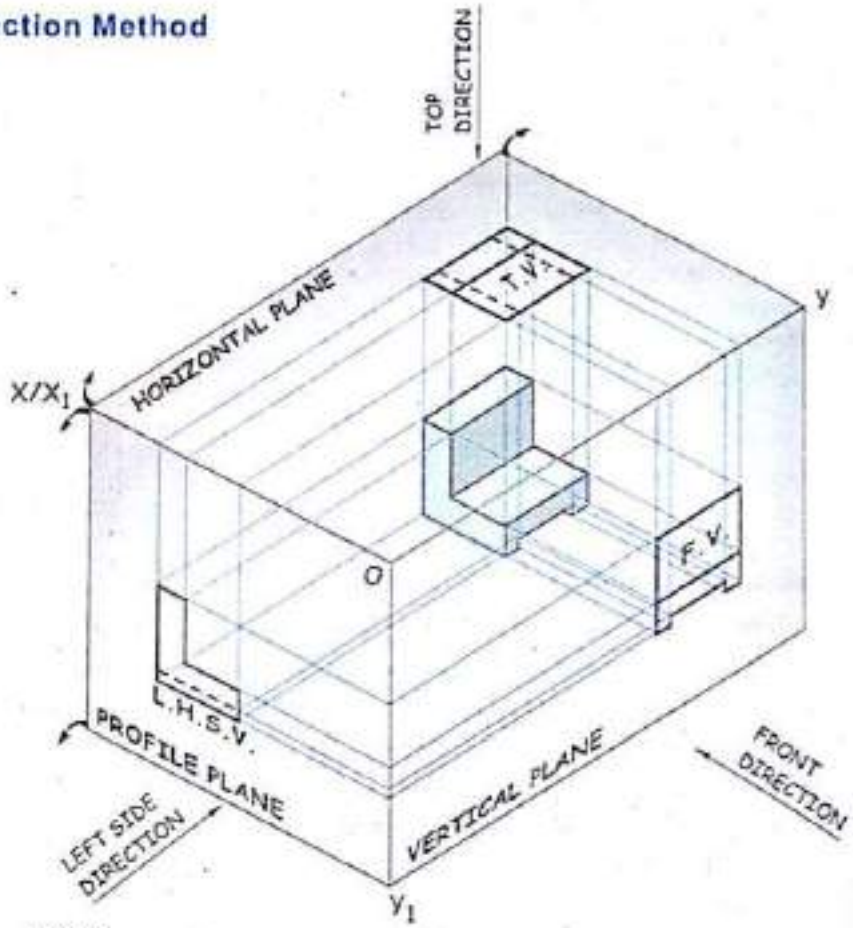

FIG. 3.9

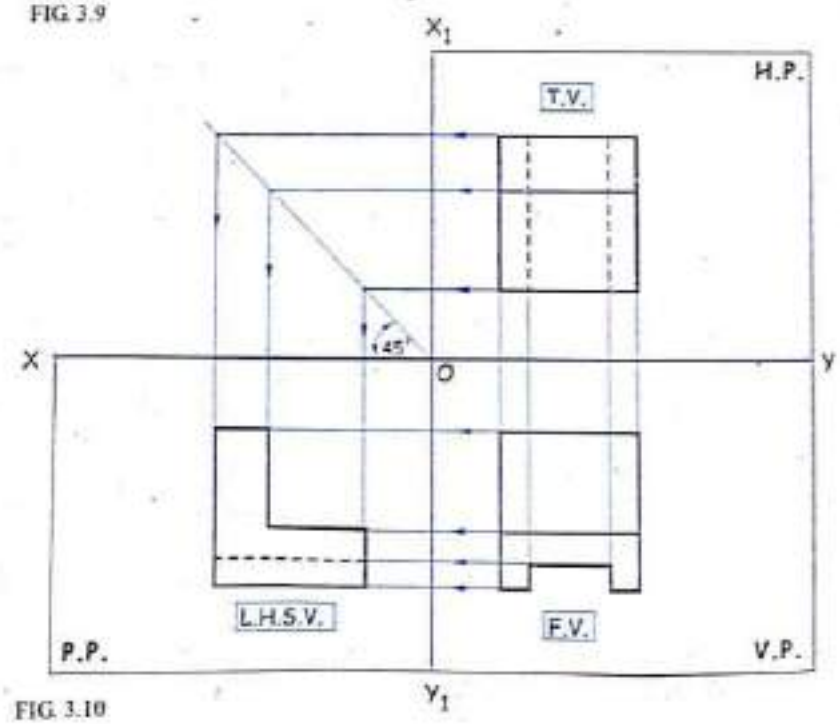

FIG. 3.10

Scanned by CamScanner

Through the point of intersection, draw vertical projectors. Draw the horizontal projectors from the F.V. to intersect the previously drawn vertical projectors and complete the L.H.S.V. The drawing representation of the three views in orthographic projection is shown in *figure 3.11* without boundries of principal planes.

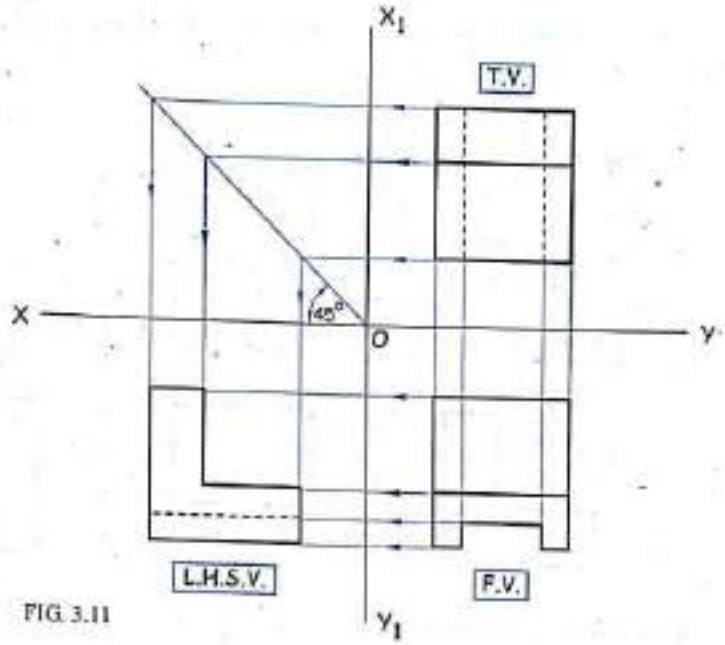

FIG. 3.11

Conclusion *(Refer figure 3.12)*

1. The object is situated in the third quadrant.
2. The principal planes are assumed to be transparent.
3. The principal planes lies between the observer and the object.
4. The orthographic projection of an object obtained on the V.P. is F.V. and lies below the *XY* line.
5. The orthographic projection of an object obtained on the H.P. is T.V. and lies above the *XY* line.
6. The orthographic projection of an object obtained on the P.P. is S.V. and lies on the side of F.V.
   a. L.H.S.V. is drawn on the left side of F.V.
   b. R.H.S.V. is drawn on the right side of F.V.

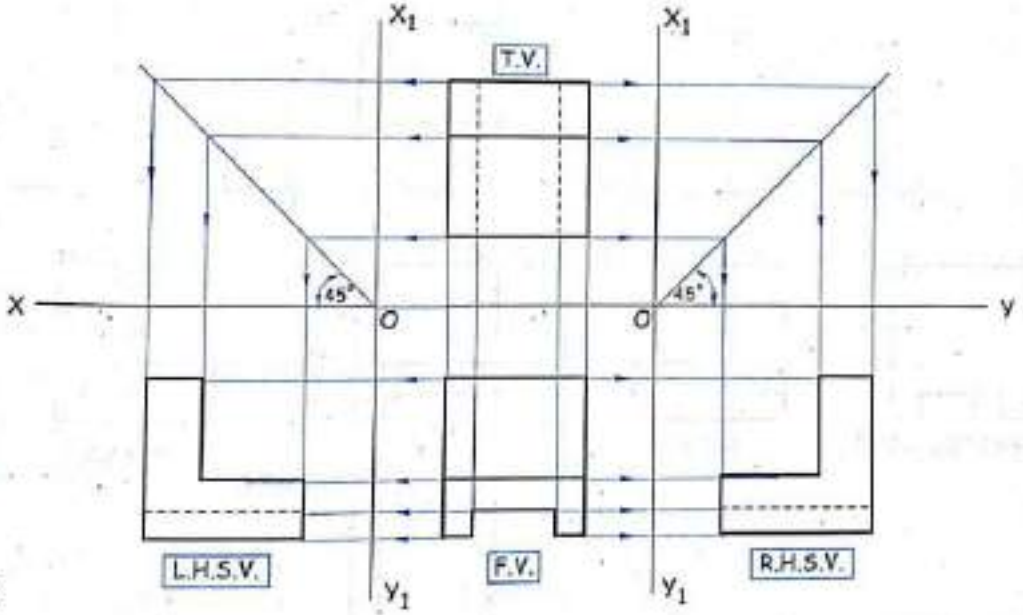

FIG. 3.12

***Note :** Third angle projection method is recommended in U.S.A. and the continent of Europe.*

Scanned by CamScanner

Six Views of an Object *[Refer figure 3.13 (a), (b), (c).]*

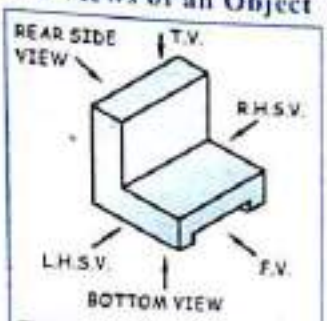

FIG. 3.13 (a)

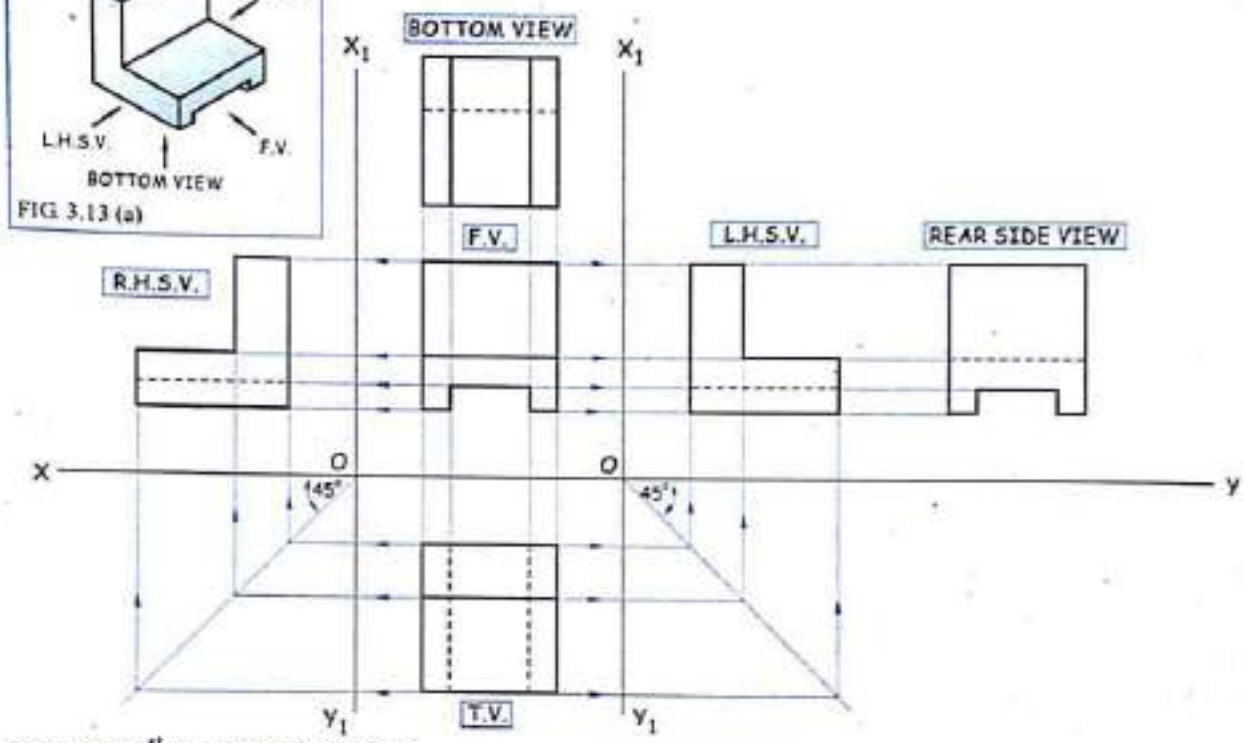

FIG. 3.13(b) 1st Angle Projection Method

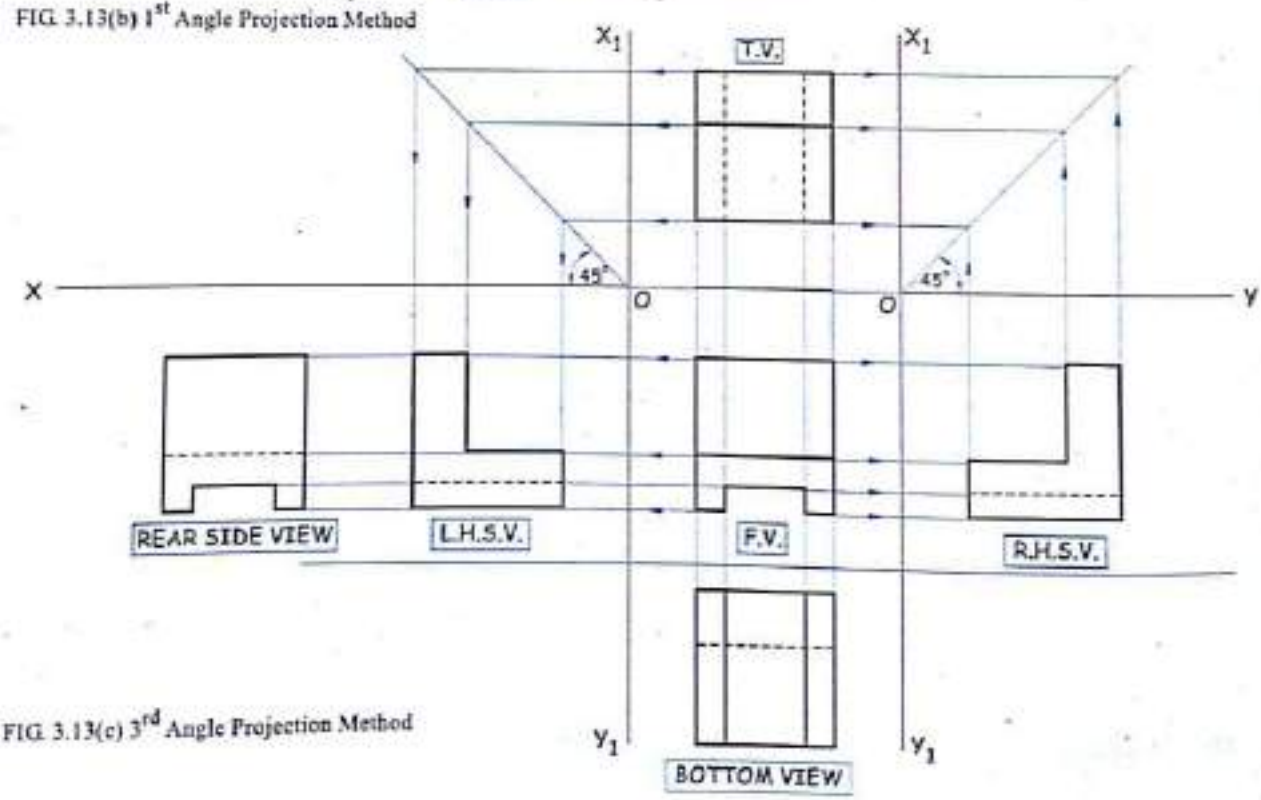

FIG. 3.13(c) 3rd Angle Projection Method

Scanned by CamScanner

3.5 Symbols for Method of Projections

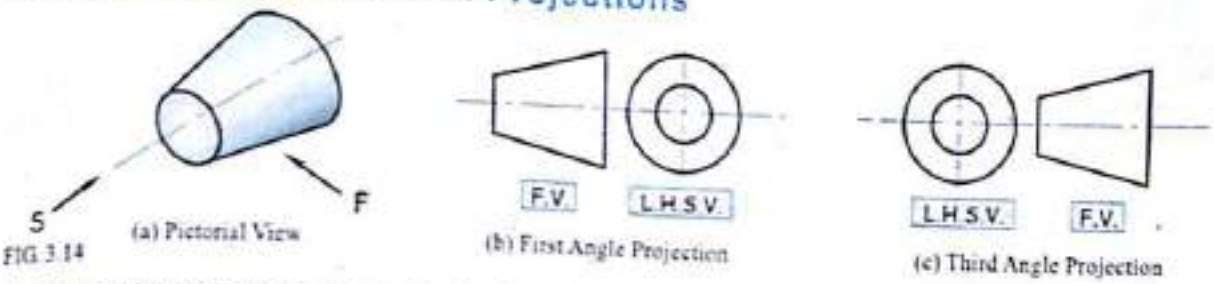

FIG 3.14 (a) Pictorial View (b) First Angle Projection (c) Third Angle Projection

It is essential to indicate the method of projection used. A symbolic figure recommended by the Bureau of Indian Standard is required to be drawn within the title block on the drawing sheet. A frustum of a cone placed with its axis horizontal is used for the symbol of projection as shown. *Refer figure 3.14.*

Methods of Drawing Hidden Lines

The hidden edges of an object are drawn by dotted lines. The dotted lines should be drawn as shown.

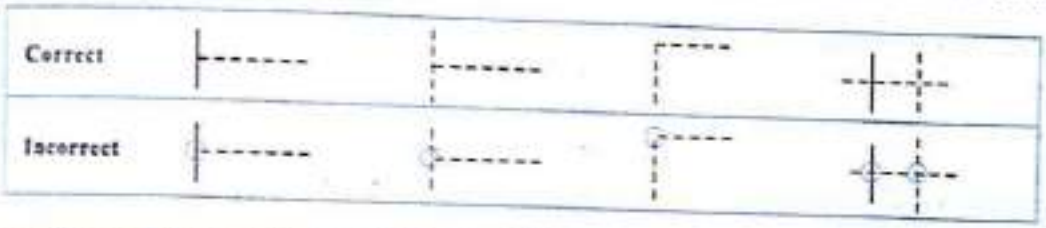

Analysis of Points, Lines and Planes in Principal Planes

1. If a line is perpendicular to one principal plane, then its projection on that principal plane will be a point view.
2. If a line is parallel to one principal plane, then its projection on that principal plane will show the true length.
3. If a line is inclined to one principal plane, then its projection on that principal plane will show the shorter line (apparent view).
4. If a plane is perpendicular to one principal plane, then its projection on that principal plane will be a line view.
5. If a plane is parallel to one principal plane, then its projection on that principal plane will show the true shape.
6. If a plane is inclined to one principal plane, then its projection on that principal plane will be fore-shortened (apparent view).
7. If two surfaces intersect, edge of an object is formed.
8. If three surfaces meet at one point, corner of an object is formed.

Relation Between Front View, Top View and Side View

1. The F.V. and the T.V. are always in line vertically.
2. The F.V. and the S.V. are always in line horizontally.
3. Height of the F.V. and the S.V. are always same.
4. Length of the F.V. and the T.V. are always same.
5. Breadth of the T.V. and the S.V. are always same.

Scanned by CamScanner

4 ORTHOGRAPHIC PROJECTIONS

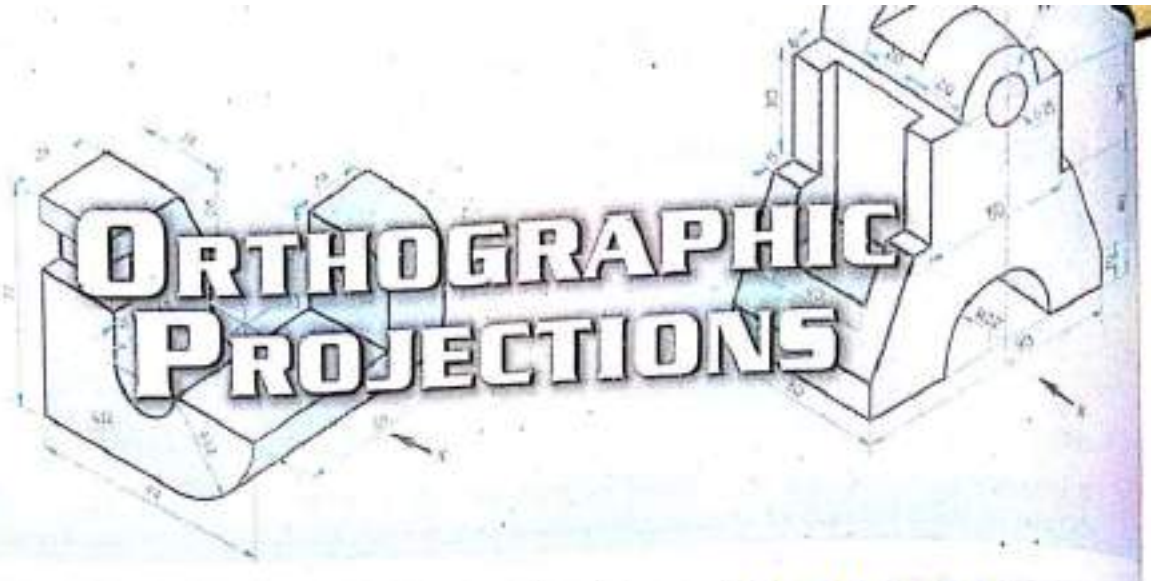

** Refer Chapter 3 Concept of Projections (Art. 3.1 to 3.5)*

4.1 Procedure for Preparing Orthographic Projections

1. Generally the arrow '*X*' represent front view direction and the side view's direction is decided by front view direction.
2. If not directed, select the view as front view which shows maximum details.
3. Decide the number of views to be drawn.
4. Considering the overall length, height and width of an object from the given pictorial view determine overall dimensions of the required views.
5. Draw the block for each view with overall sizes and proper location - keep at least 20 gap between the views.
6. Draw centre lines, if any, in all the views.
7. Draw simultaneously the required details in all the views. Preferably follow order of details drawing as circles, arc of circles, straight lines for proper shape of an object, straight lines for the minor details of an object.
8. Draw the dotted lines to represent the hidden edges of the object.

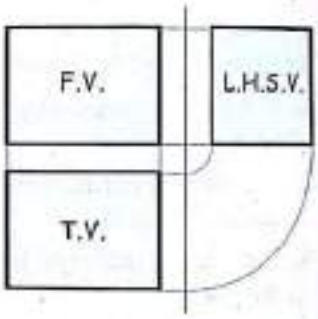

9. The view should be drawn with fair and required types of lines say object line, centre line, dotted line etc. so as to give good appearance.
10. Insert the dimensions and notes in proper places and name the views.
11. Mention the scale and method of projection used.
12. If sectional view is asked complete the views by drawing hatching lines wherever required.

Precedence of Lines

In case of coinciding condition for object lines, dotted lines, centre lines dimension lines a definite precedence is to be followed to avoid any confusion. The order of precedence of lines are as shown.

1. When a dotted line coincides with an object line, the object line will take precedence over the dotted line. *Refer figure 4.1(a).*
2. When a centre line coincides with a dotted line, the dotted line will take precedence over the centre line. *Refer figure 4.1(b).*

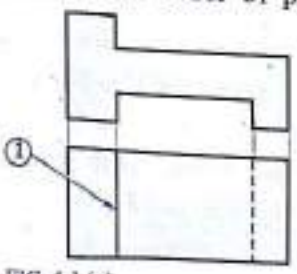

FIG. 4.1 (a)

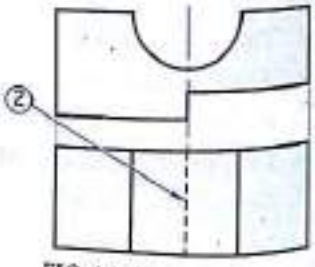

FIG. 4.1 (b)

Scanned by CamScanner

3. When a centre line coincides with a cutting plane line, the cutting plane line will take precedence over the centre line.
4. When a dimension line coincides with a section line, the dimension line will take precedence over the section line.

4.2 Elementary Solved Problems

The direction of an arrow indicates observers' position, hence it will give the F.V. The visible face on the side of F.V. is the required side view to be drawn. F, F_1, F_2, . . . are the faces visible from F.V. T, T_1, T_2 . . . are the faces visible from T.V. and S, S_1, S_2, . . . are the faces visible from side view. The given pictorial view (i.e. problem) and its orthographic view (i.e. solution) shown in figures are self explanatory. *Refer figure 4.2 (a) to (g).*

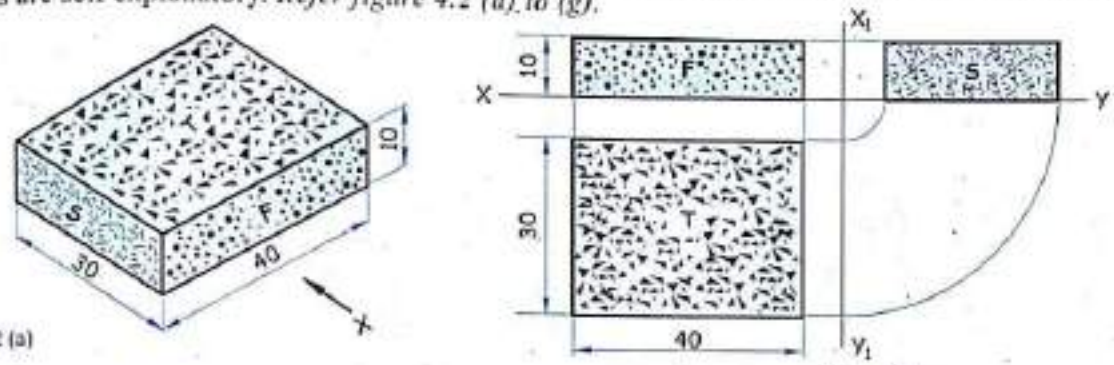

FIG 4.2 (a)

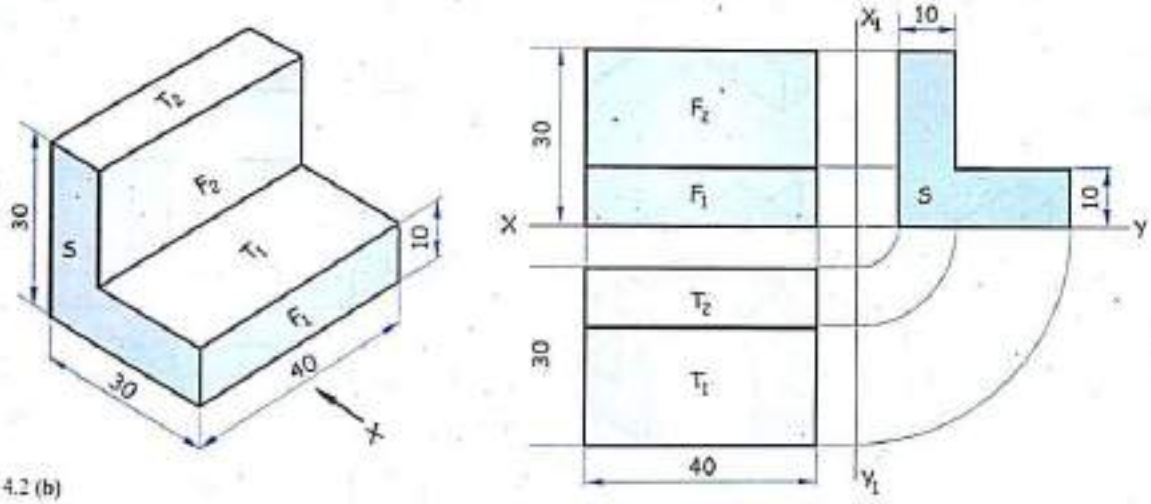

FIG 4.2 (b)

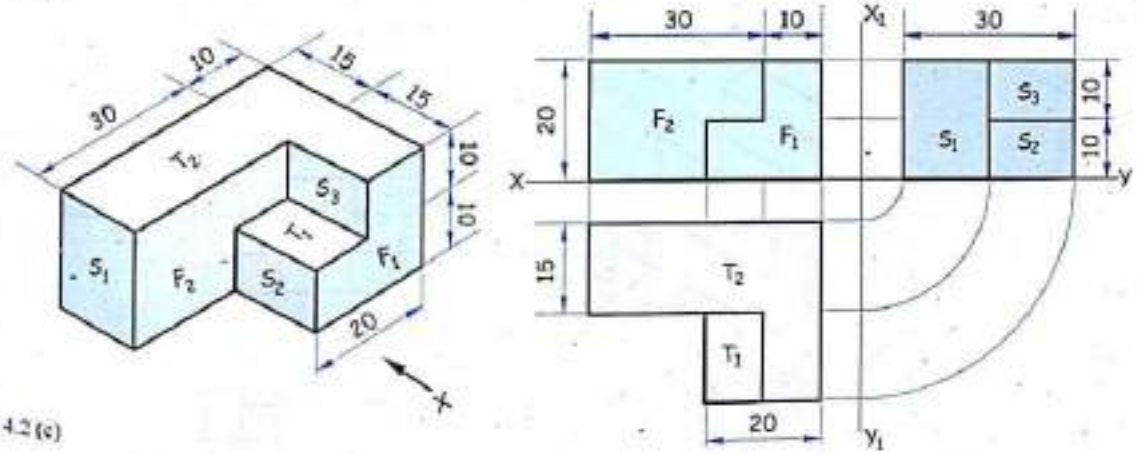

FIG 4.2 (c)

Scanned by CamScanner

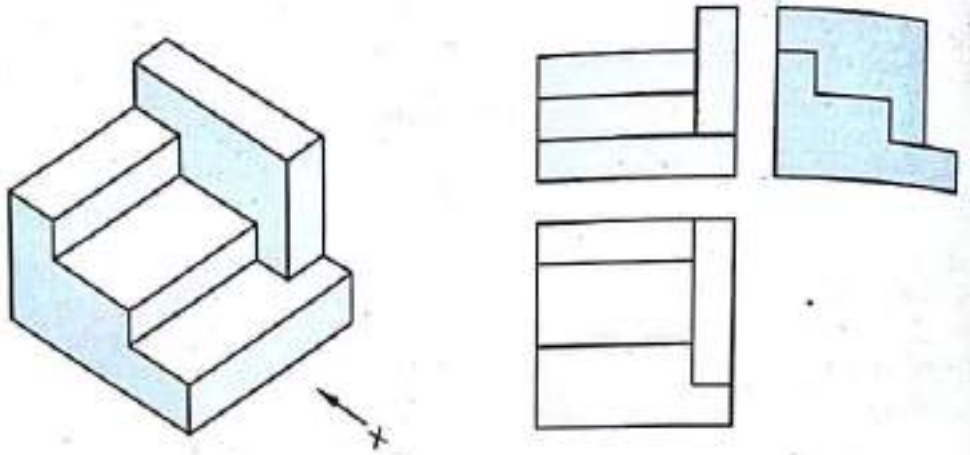

FIG. 4.2 (d)

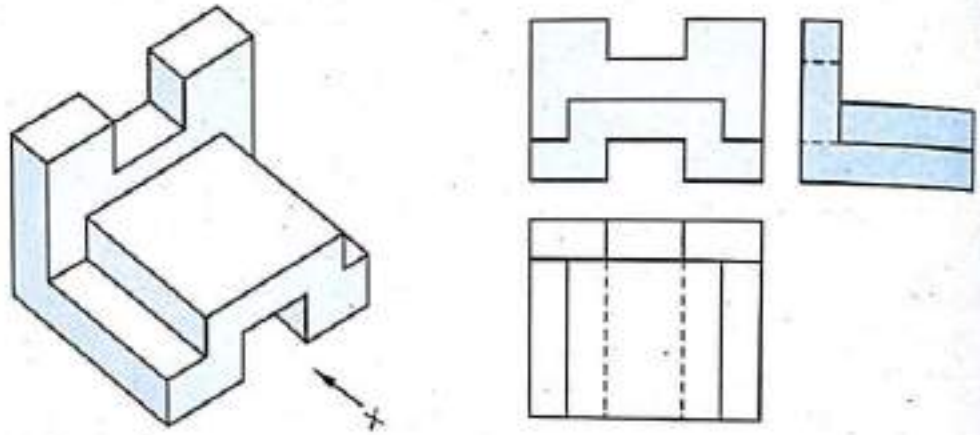

FIG. 4.2 (e)

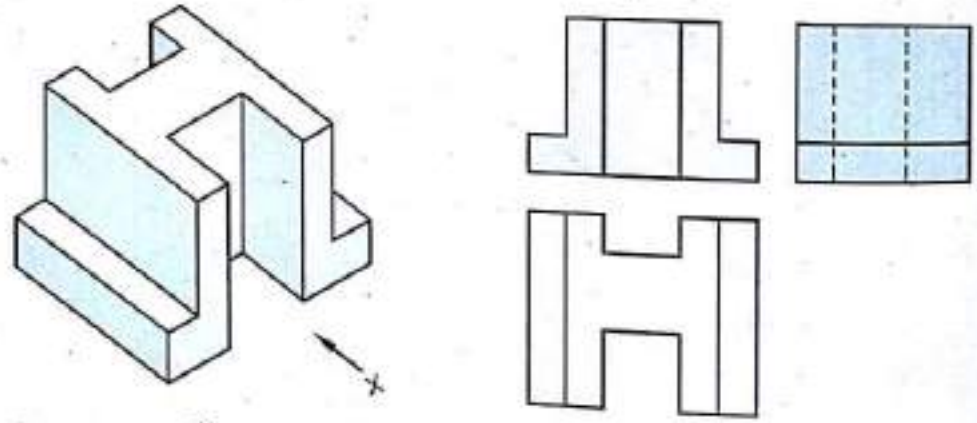

FIG. 4.2 (f)

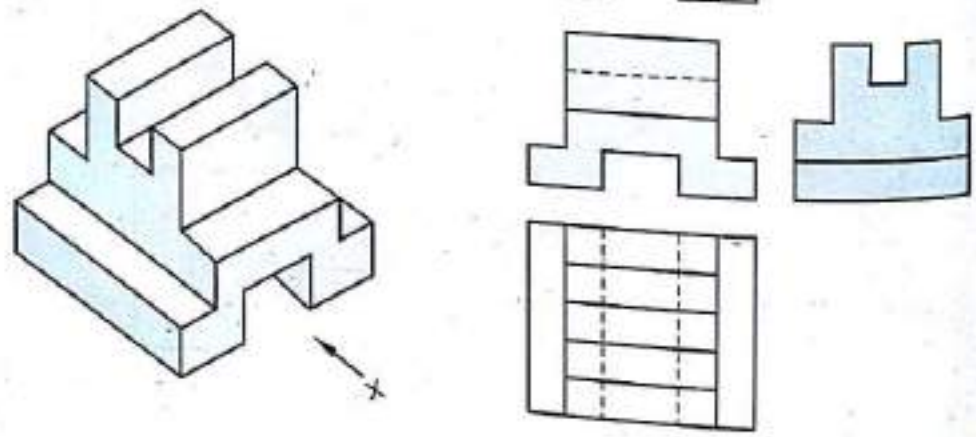

FIG. 4.2 (g)

Scanned by CamScanner

4.3 Exercise I

For the given pictorial views in *figure 4.3*, draw the F.V., T.V. and the S.V. Consider each division of mark as 10 mm.

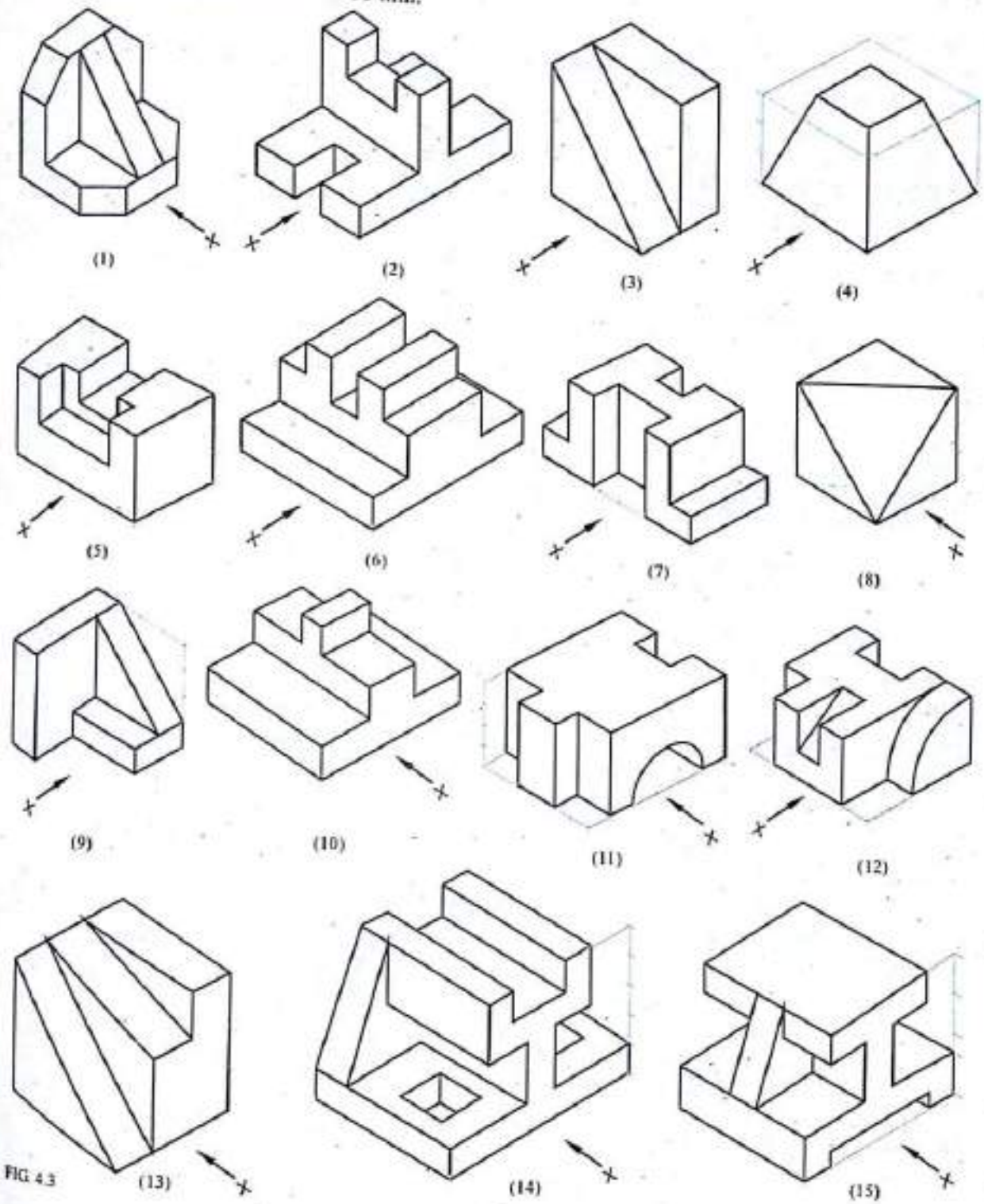

FIG 4.3

Scanned by CamScanner

4.4 Solved Problems

Problem 1

The *figure 4.4 (a)* shows pictorial view of an object, draw the following views using first angle method of projections.

(a) Front view from '*X*' direction.

(b) Top view.

(c) Right hand side view.

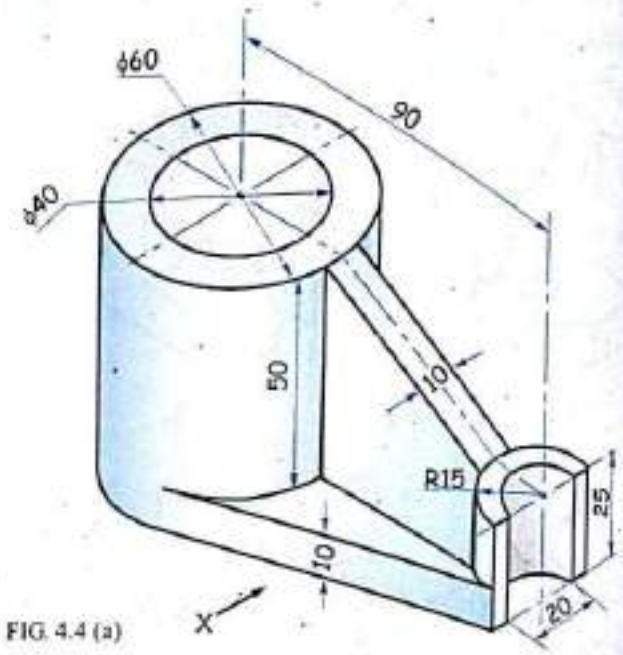

FIG. 4.4 (a)

Solution

Refer figure 4.4 (b).

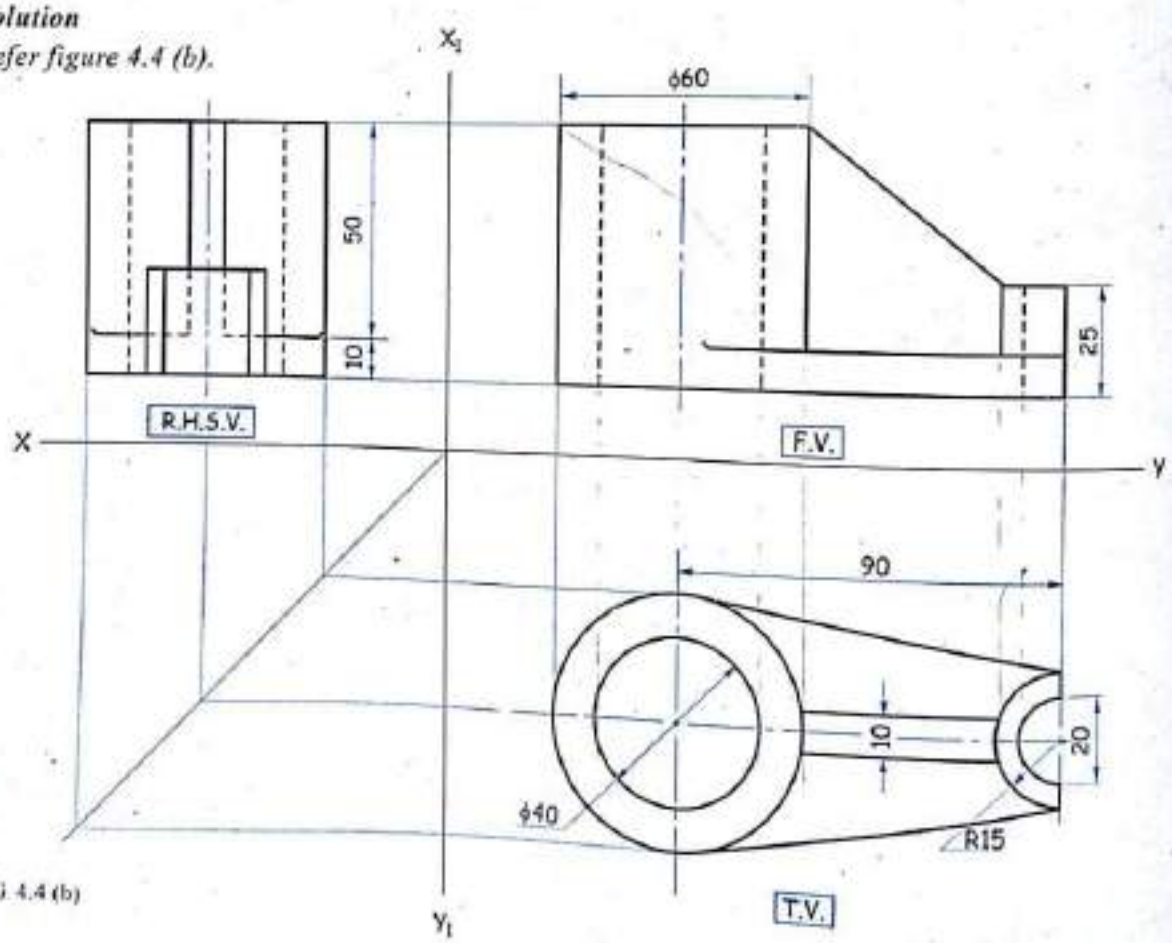

FIG. 4.4 (b)

Scanned by CamScanner

Problem 2

Figure 4.5 (a) shows pictorial view of an object. Draw the following views using first angle method of projection.

(a) Plan.

(b) Elevation.

(c) Side view.

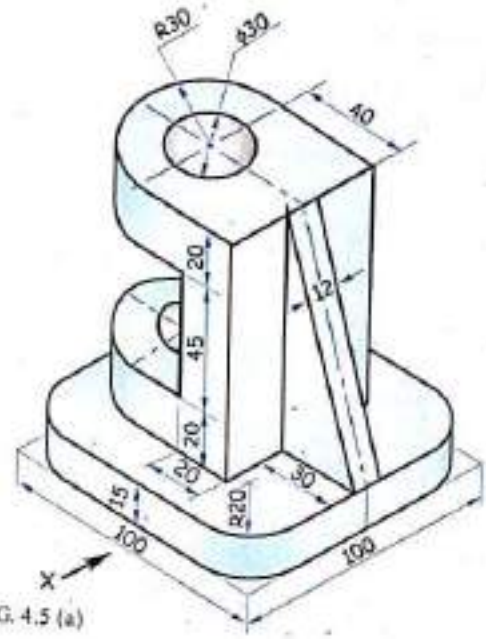

FIG. 4.5 (a)

Solution

Refer figure 4.5 (b).

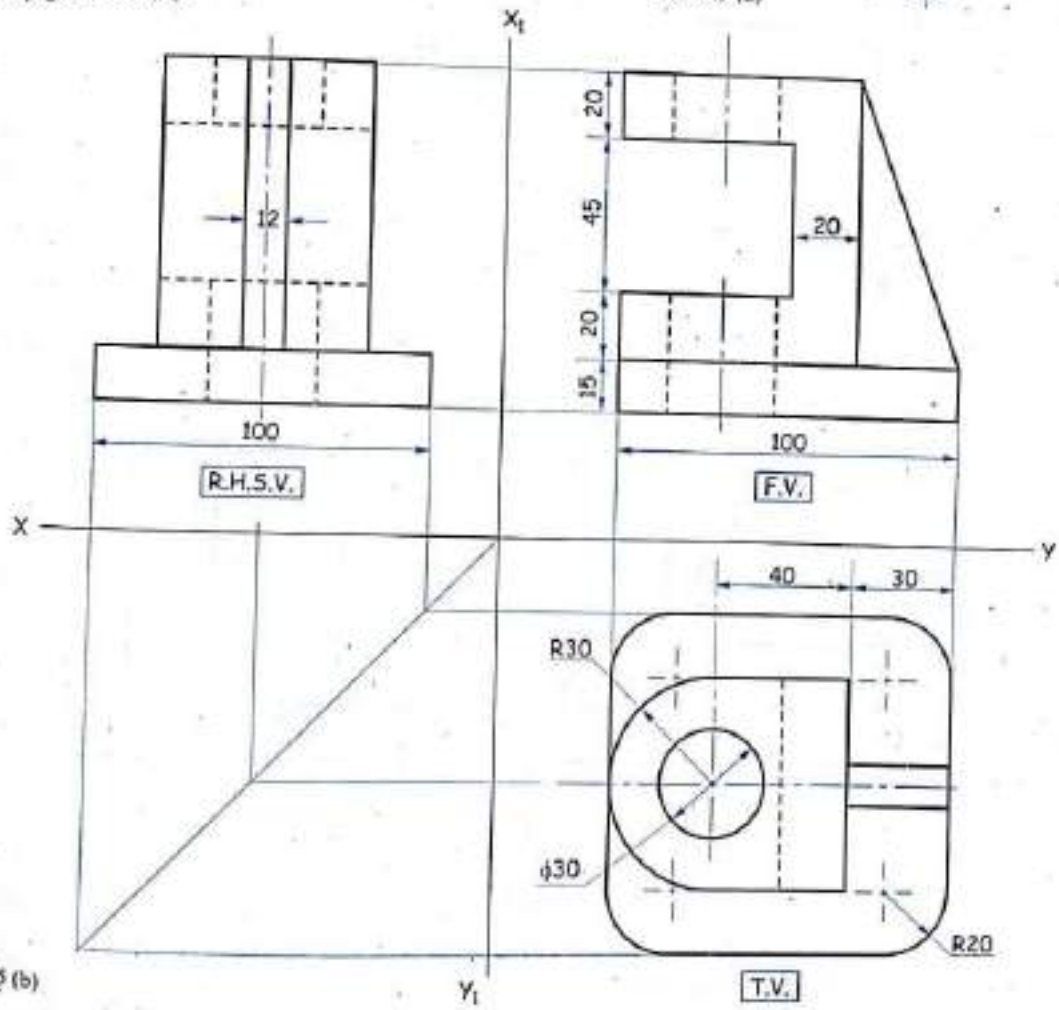

FIG. 4.5 (b)

Scanned by CamScanner

Problem 2(a)

Figure 4.5 (c) shows pictorial view of an object. Draw the following views using third angle method of projection.

(a) Plan.

(b) Elevation.

(c) Side view.

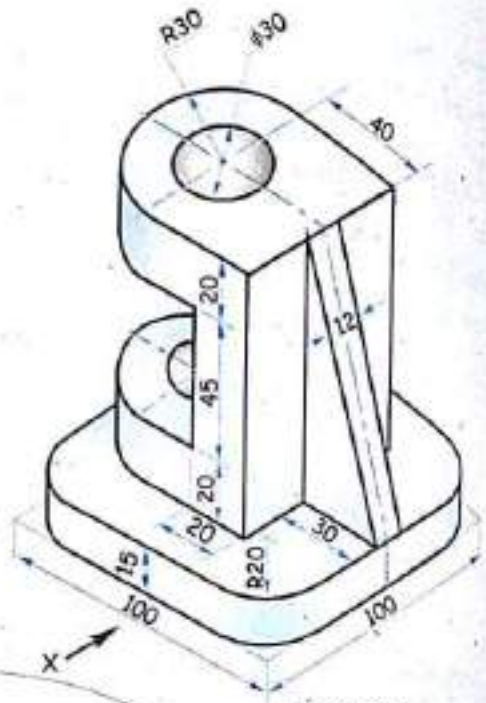

FIG. 4.5 (c)

Solution

Refer figure 4.5 (d).

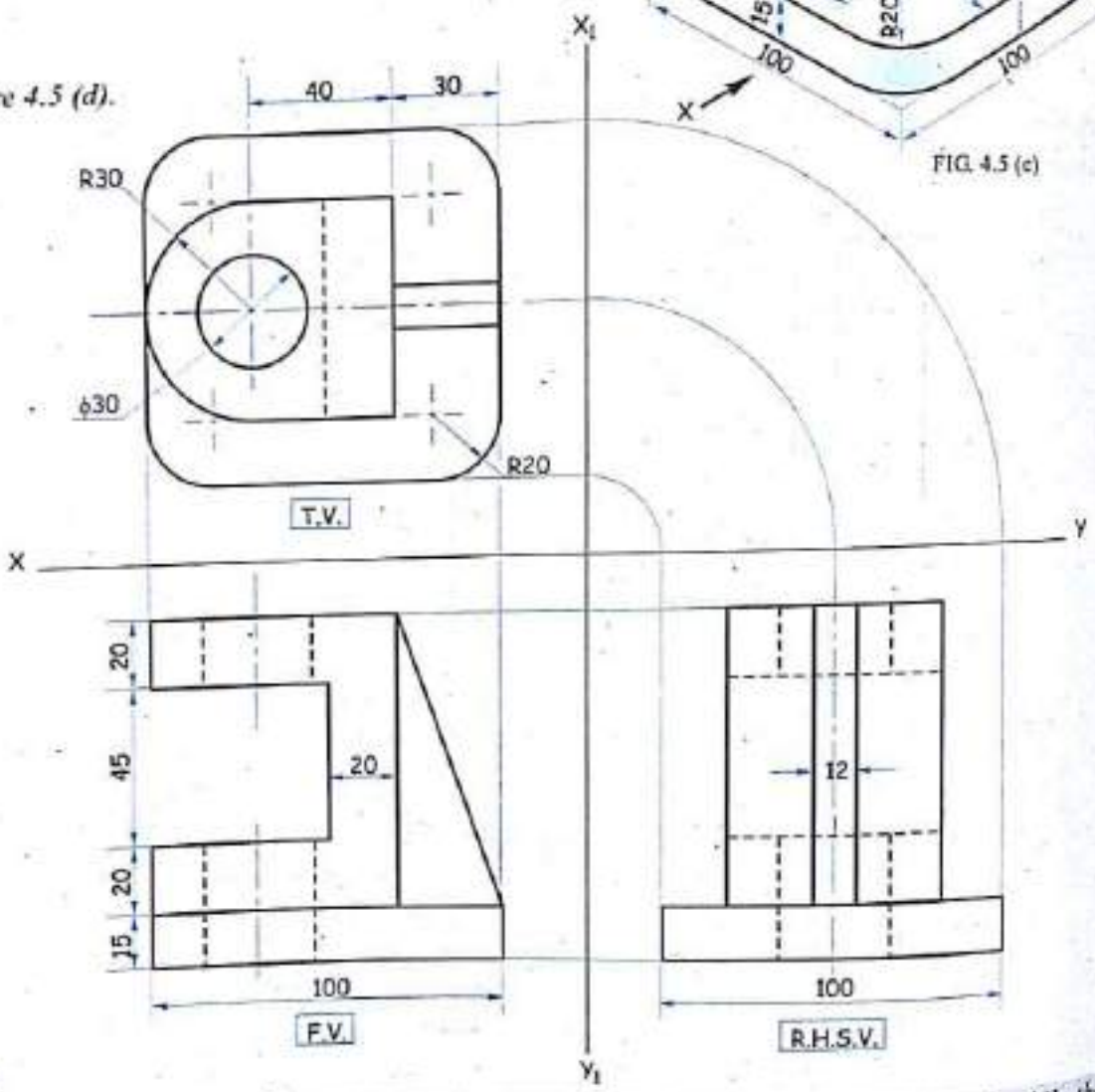

FIG. 4.5 (d)

Note : *Problems 2 and 2(a) are same. The solution for problem 2 is in first angle method while that for problem 2(a) is in third angle method. This is just to show the difference between first and third angle methods of projection.*

Scanned by CamScanner

Problem 3

Figure 4.6 (a) shows pictorial view of an object. Using first angle method of projection draw

(a) Front view from direction *X*.

(b) Top view

(c) Side view from left.

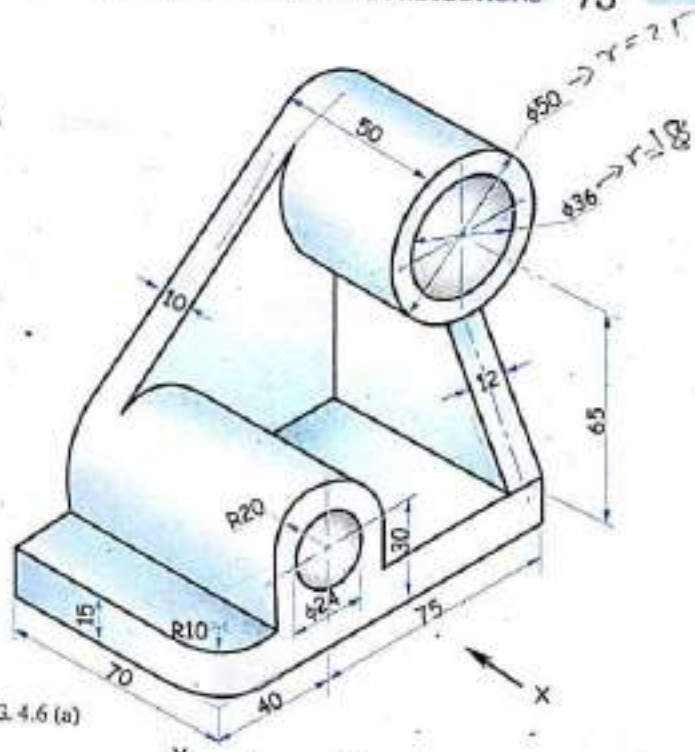

FIG. 4.6 (a)

Solution

Refer figure 4.6 (b).

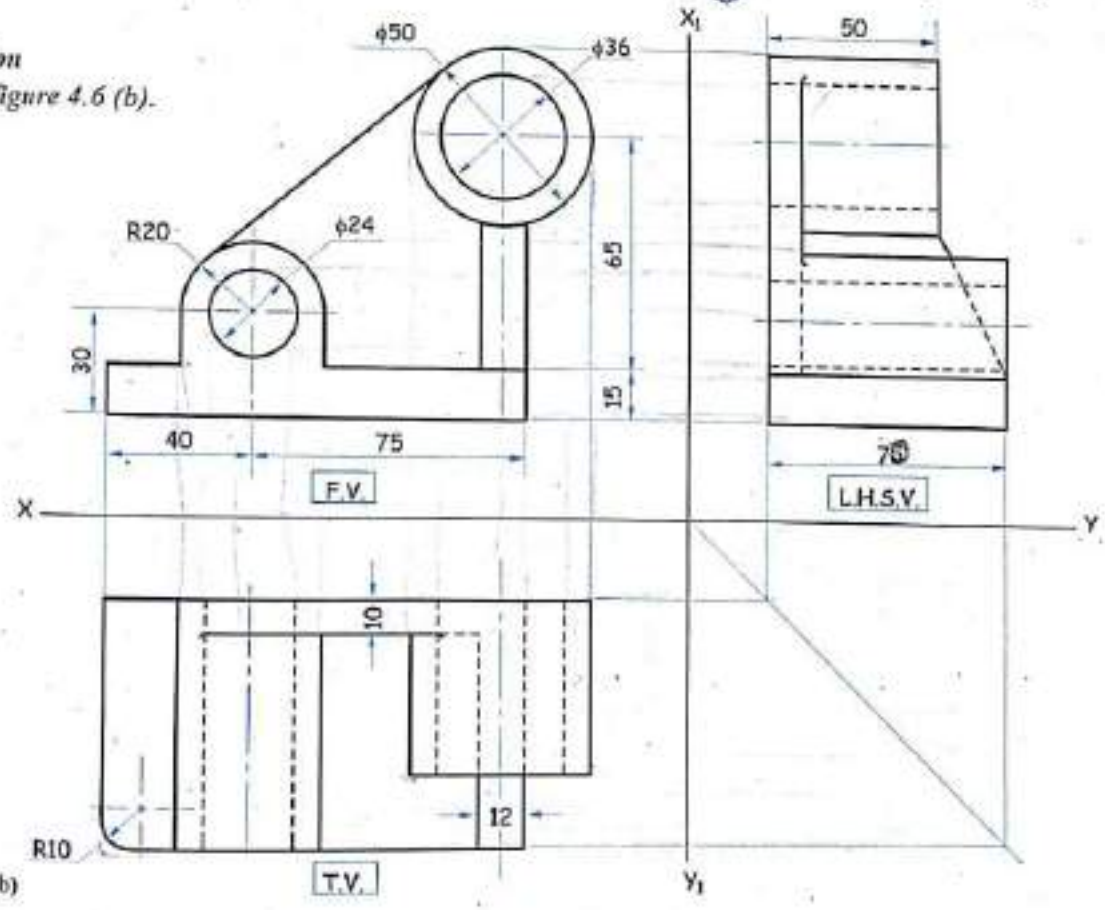

FIG. 4.6 (b)

Scanned by CamScanner

Problem 4

Figure 4.7 (a) shows pictorial view of an object. Using first angle method of projection draw :

(a) Front view in the direction *X*.

(b) Top view.

(c) Left hand side view.

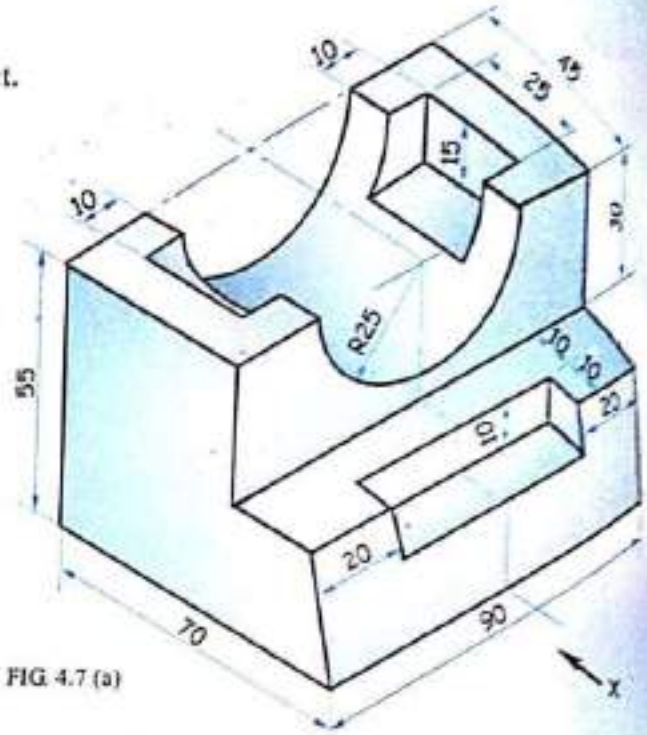

FIG. 4.7 (a)

Solution

Refer figure 4.7 (b).

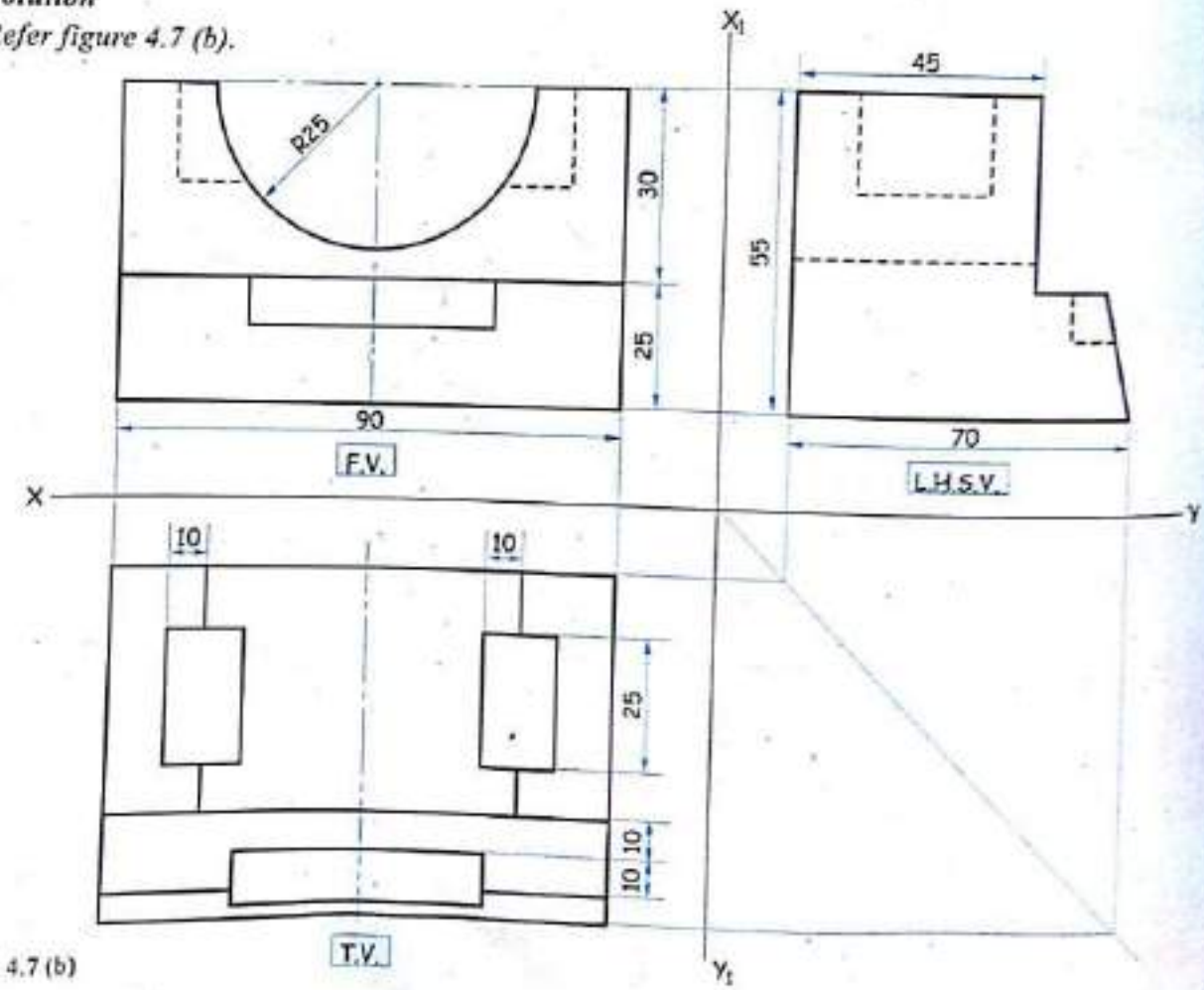

FIG. 4.7 (b)

Scanned by CamScanner

Problem 5

Figure 4.8 (a) shows pictorial view of an object. Using first angle method, draw :

(a) Front view in the direction *X*.

(b) Top view.

(c) Left hand side view.

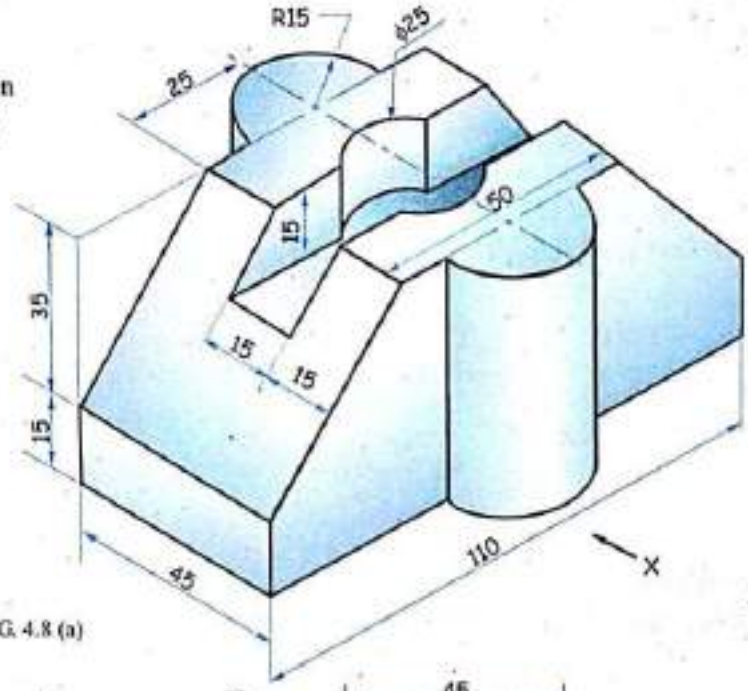

FIG. 4.8 (a)

Solution

Refer figure 4.8 (b).

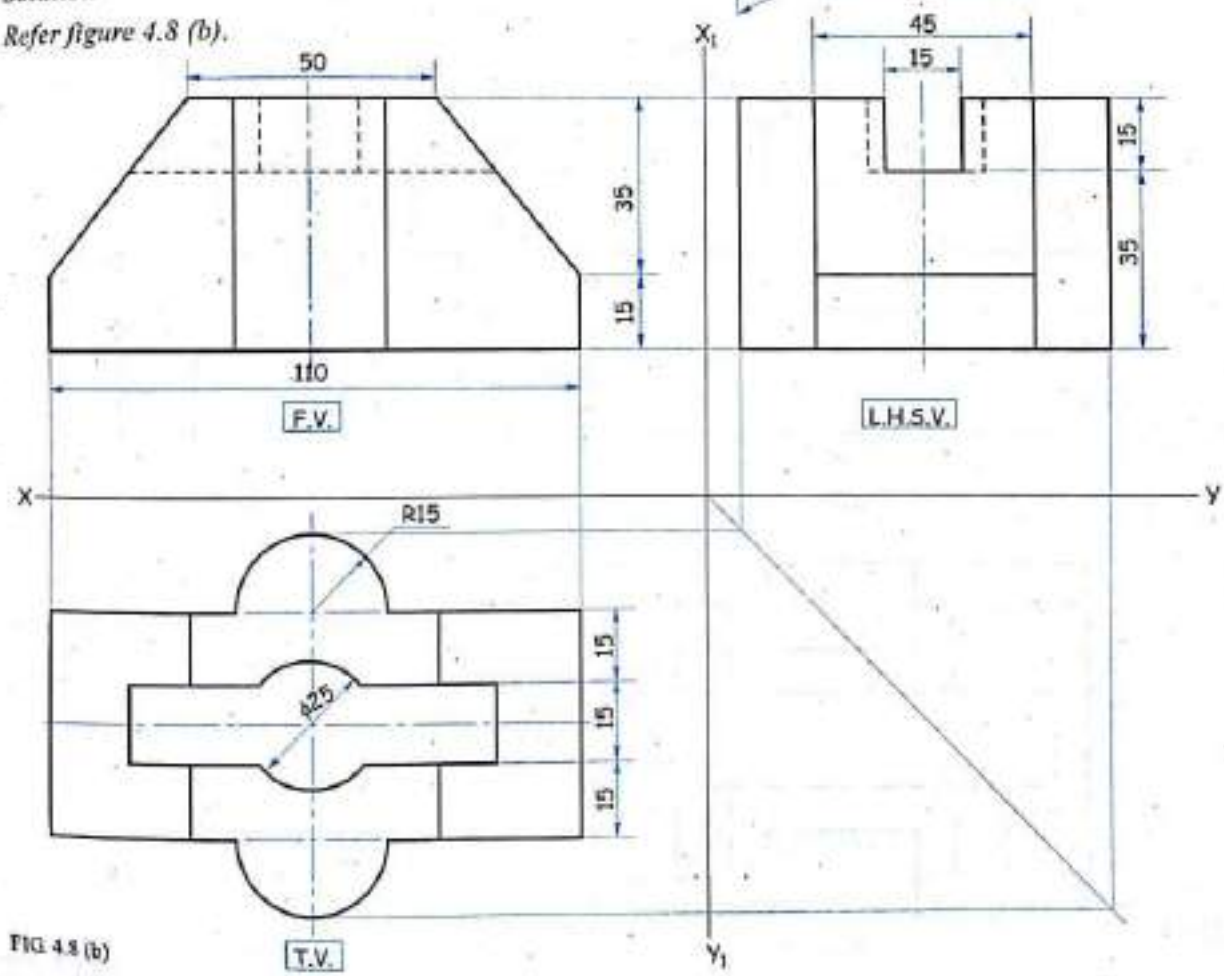

FIG. 4.8 (b)

Scanned by CamScanner

Problem 6

Figure 4.9 (a) shows pictorial view of an object. Using first angle method, draw :

(a) Front viewin the direction *X*.

(b) Top view.

(c) Left hand side view.

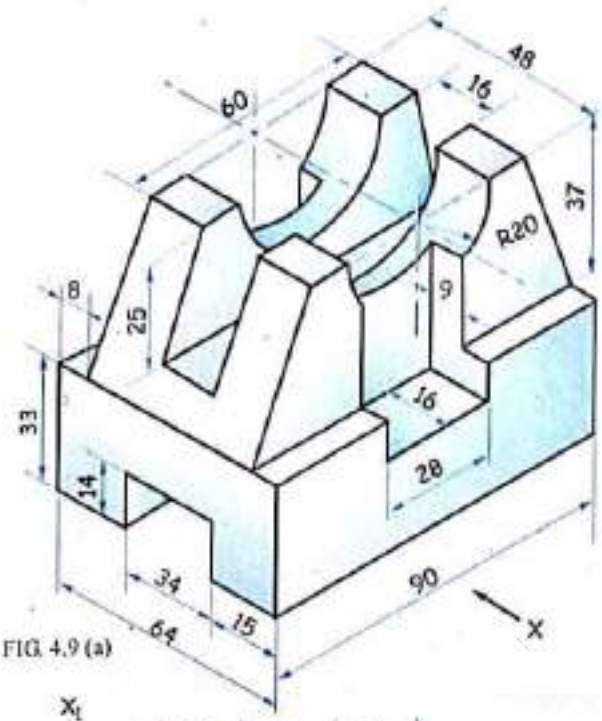

FIG. 4.9 (a)

Solution

Refer figure 4.9 (b).

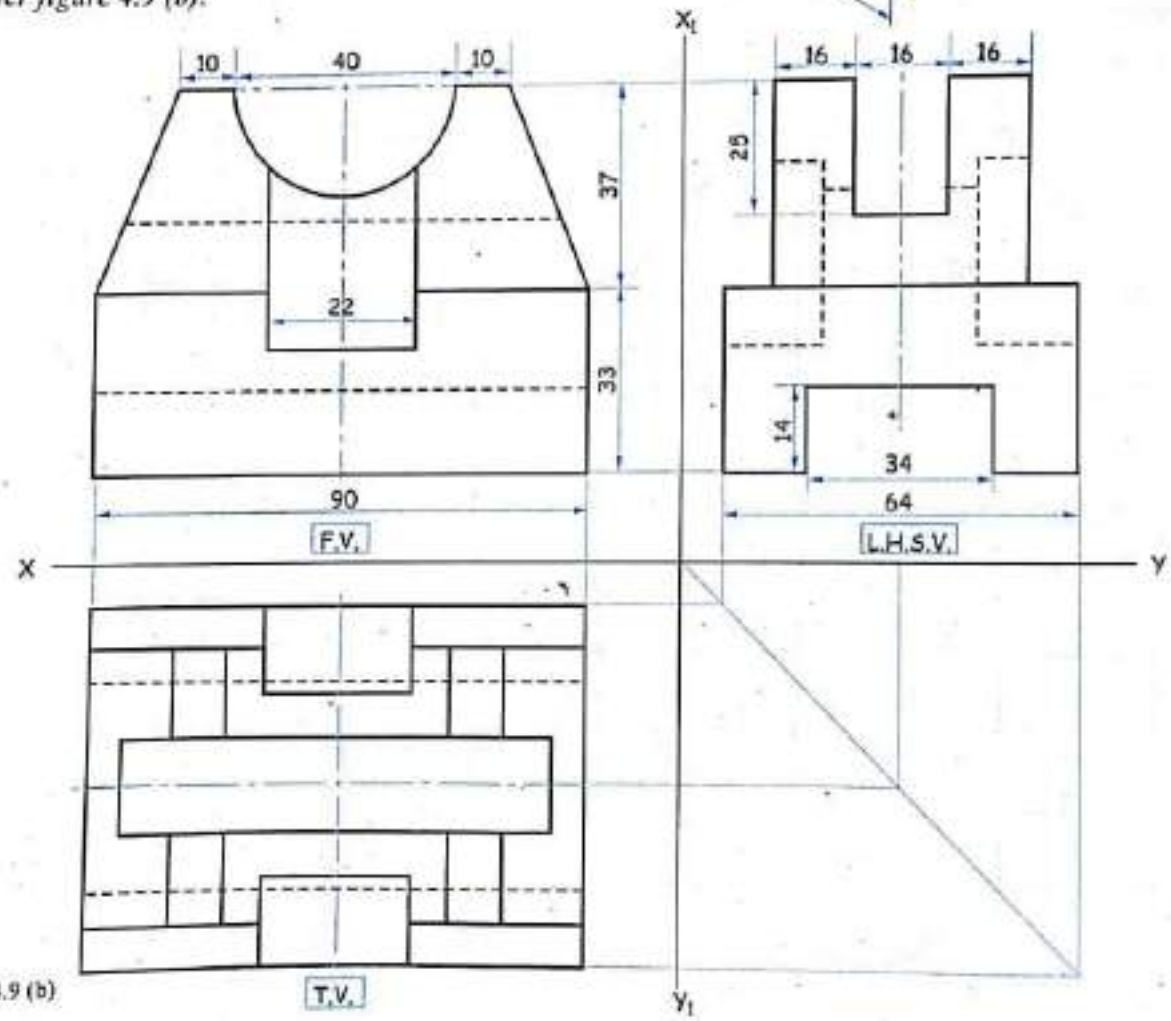

FIG. 4.9 (b)

Scanned by CamScanner

Problem 7

Figure 4.10 (a) shows pictorial view of an object.

Draw

(a) Front view.

(b) Top view.

(c) Left hand side view, if object lies in first quadrant.

(Nov. '05, M.U.)

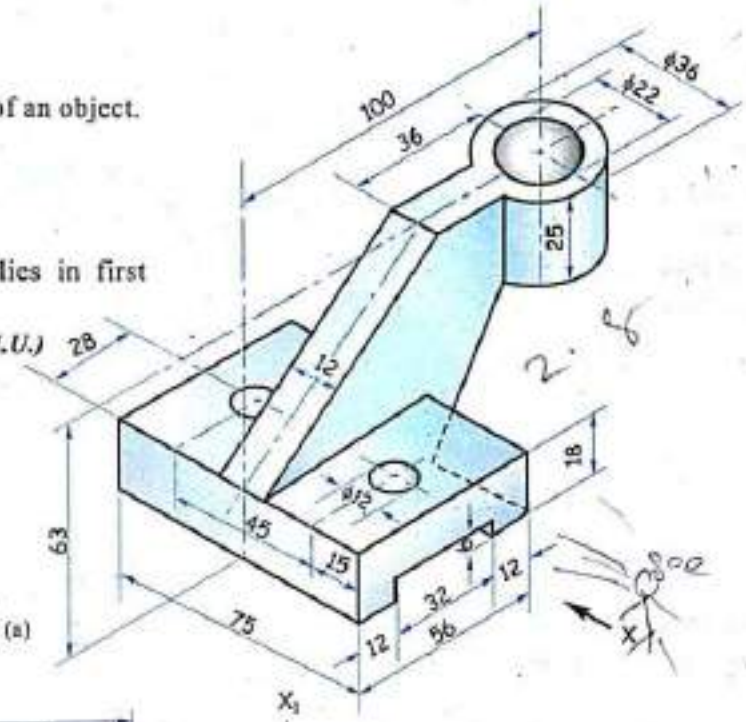

FIG. 4.10 (a)

Solution

Refer figure 4.10 (b).

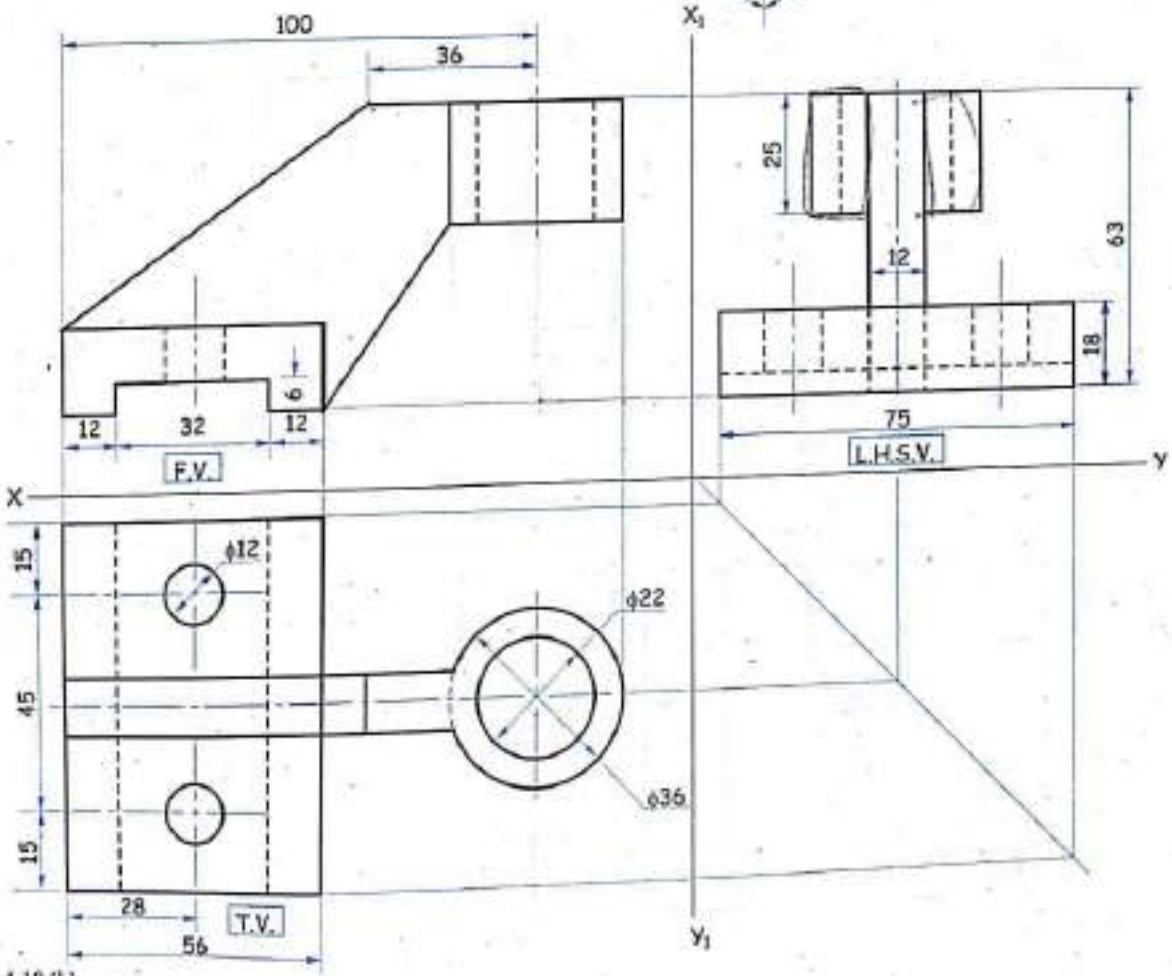

FIG. 4.10 (b)

Scanned by CamScanner

Problem 8

Figure 4.11 (a) shows pictorial view of an object.

Using first angle method of projection, draw:

(a) Front view.

(b) Top view.

(c) Left hand side view.

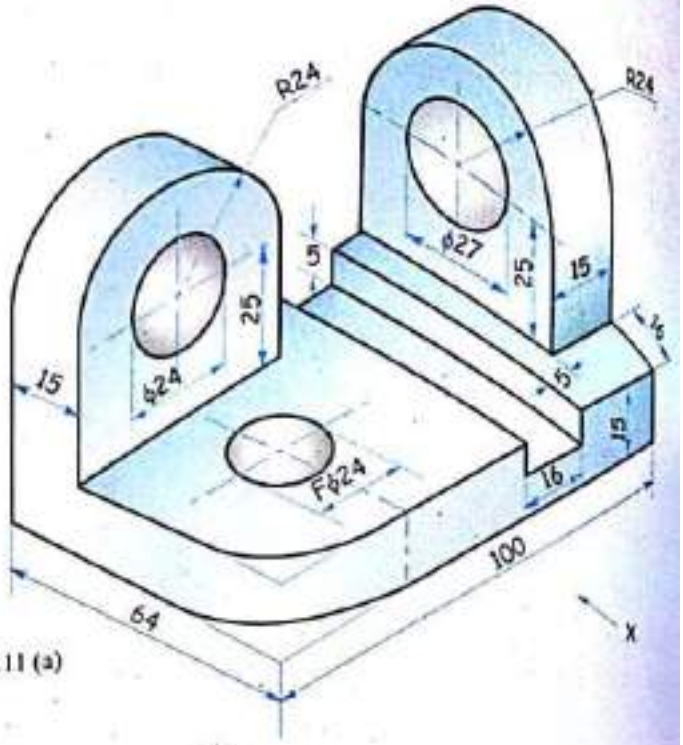

FIG. 4.11 (a)

Solution

Refer figure 4.11 (b).

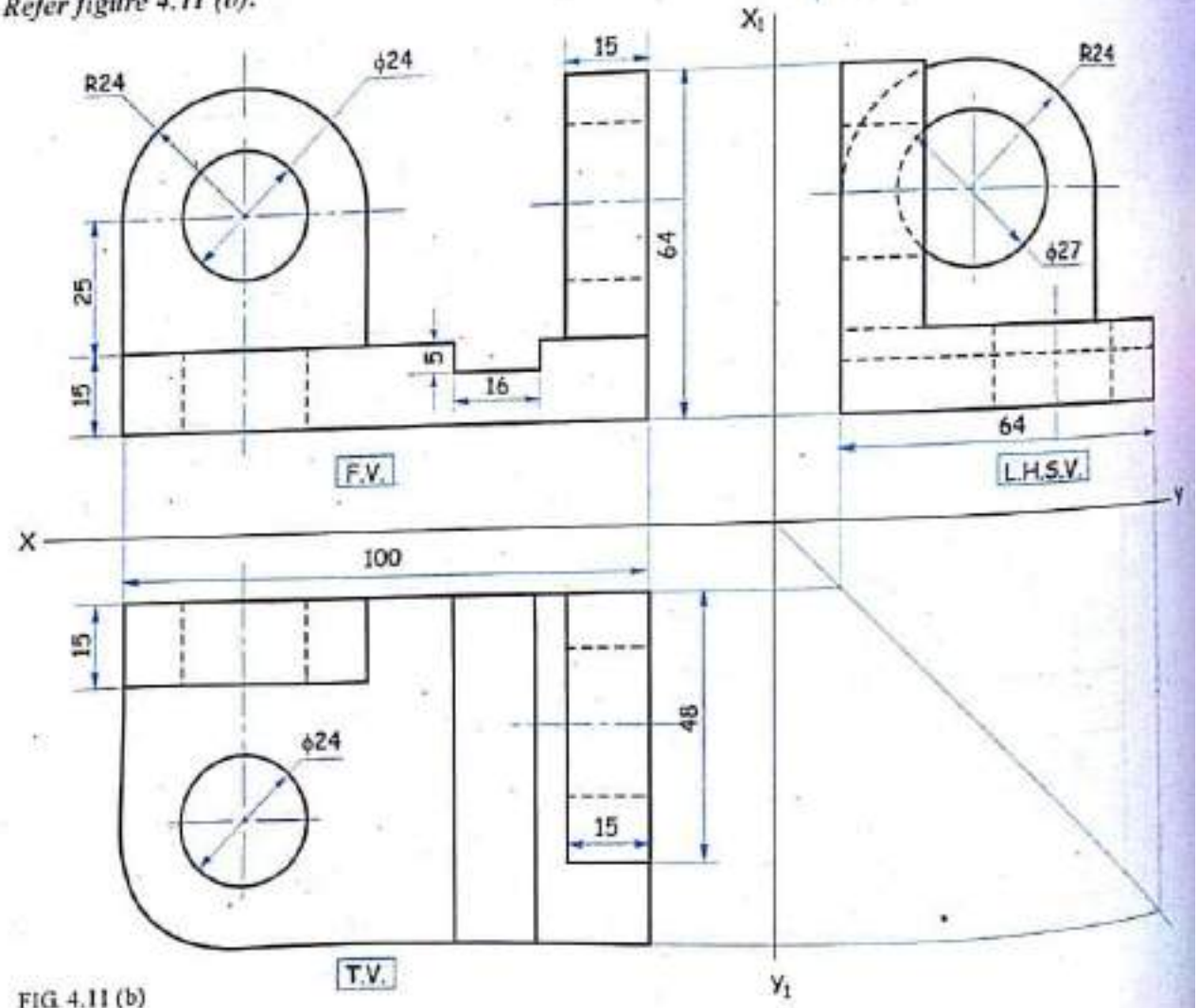

FIG. 4.11 (b)

Scanned by CamScanner

Problem 9

Figure 4.12 (a) shows a pictorial view of a Machine Block. Draw the following views :

(a) Front view looking in the direction of an arrow *X*.

(b) Top view.

(c) Left hand side view.

Show all the hidden details. Use 1:1 scale. ***(Dec. '94, M.U.)***

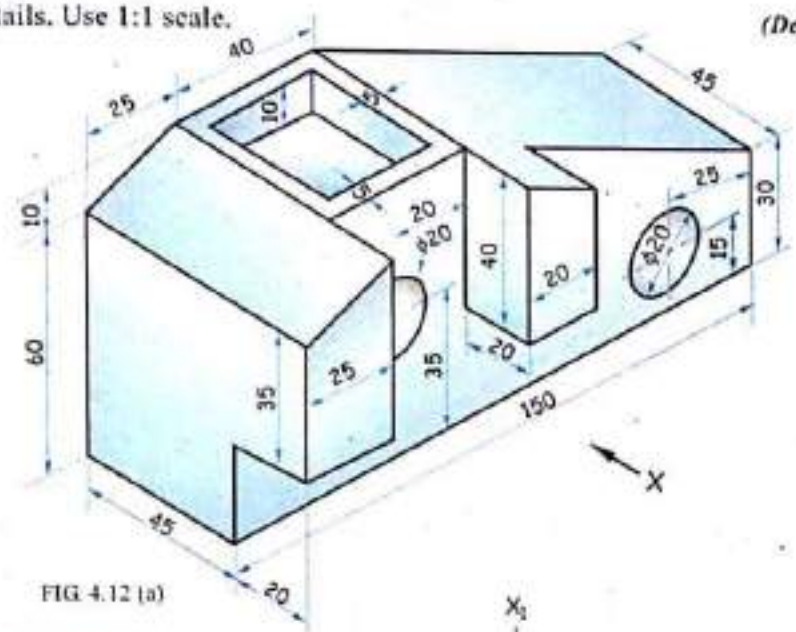

FIG. 4.12 (a)

Solution

Refer figure 4.12 (b).

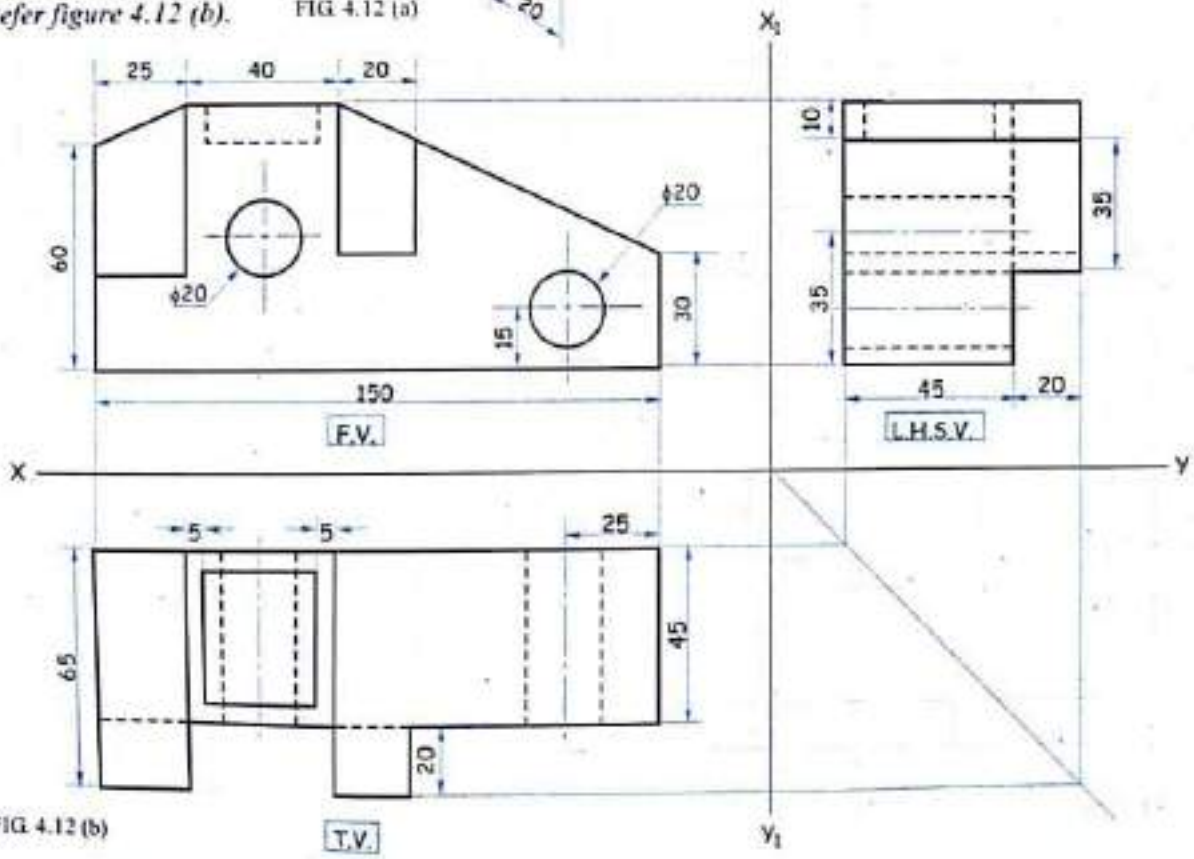

FIG. 4.12 (b)

Scanned by CamScanner

Problem 10

Figure 4.13 (a) shows the pictorial view of a Machine Block. Draw to scale full size, the following views :

(a) Front view looking in the direction of an arrow *X*.

(b) Top view.

(c) Left side view.

Dimension the views.

(May '95, M.U.)

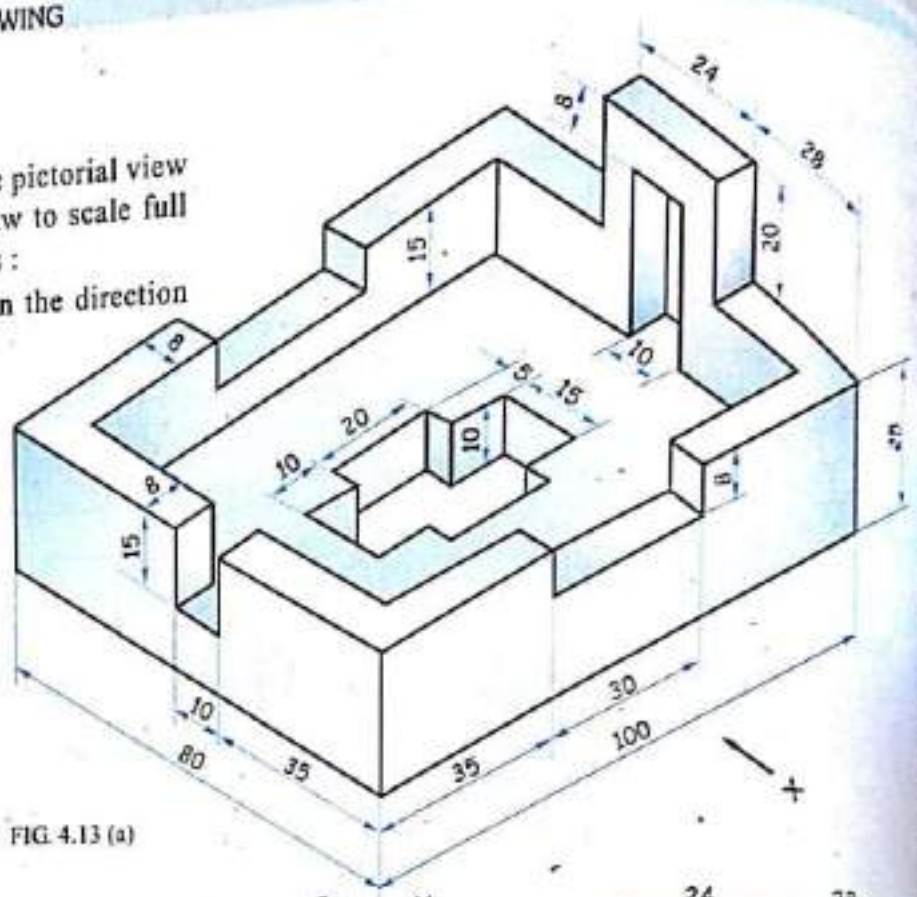

FIG. 4.13 (a)

Solution

Refer figure 4.13 (b).

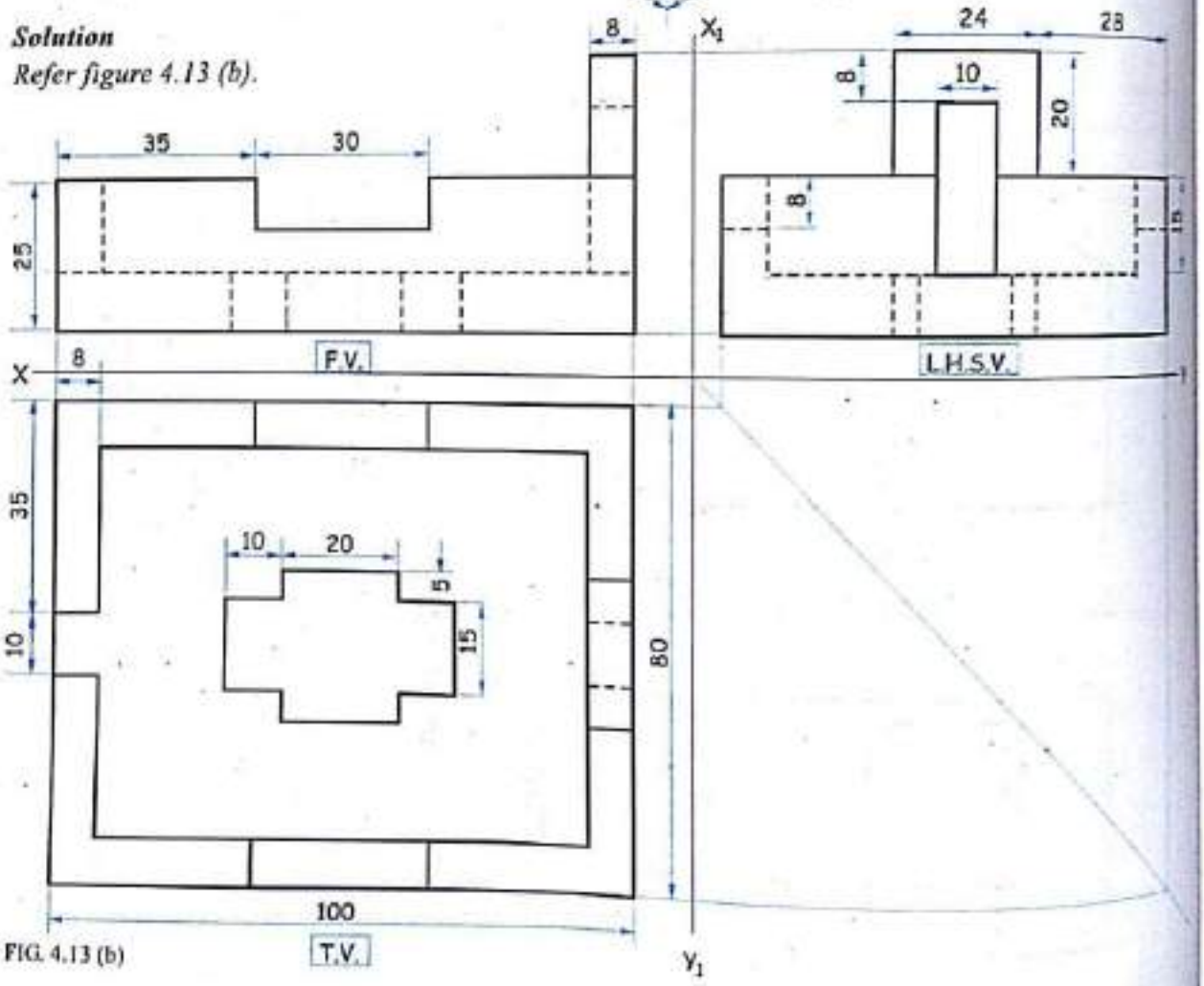

FIG. 4.13 (b)

Scanned by CamScanner

Problem 11

Figure 4.14 (a) shows the pictorial view of a Machine Block. Draw the following views using 1:1 scale by the first angle method of projection : (a) Front view along the direction of an arrow *X*. (b) Top view. (c) Left hand side view. Show all the hidden details. ***(Dec. '95, M.U.)***

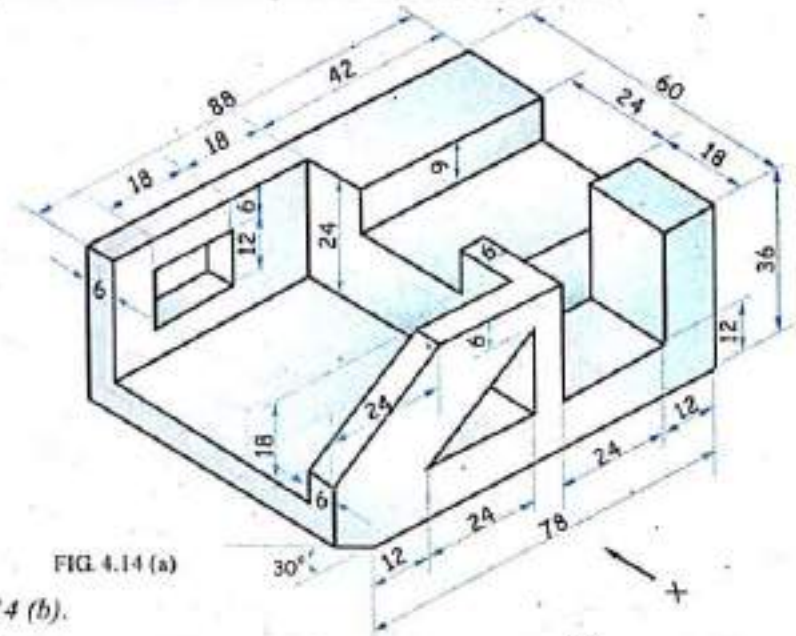

FIG. 4.14 (a)

Solution

Refer figure 4.14 (b).

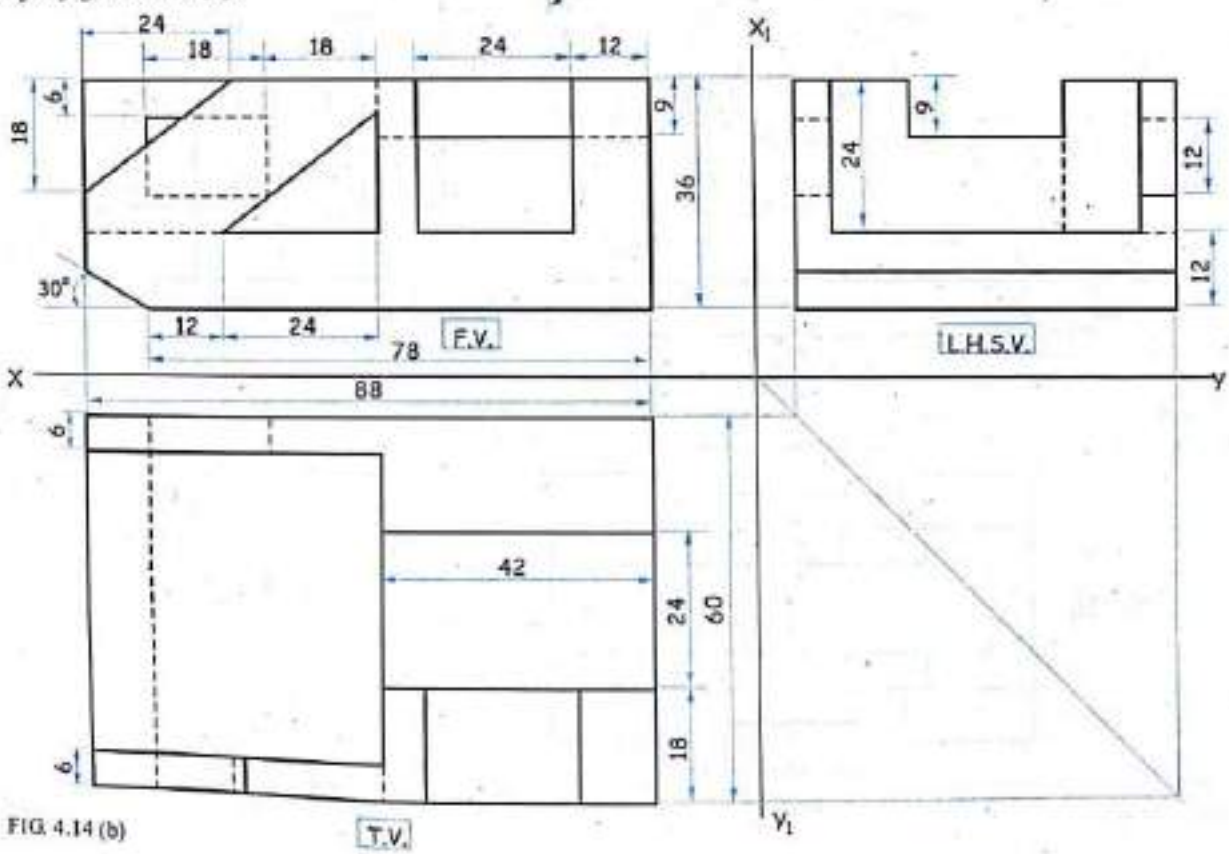

FIG. 4.14 (b)

Scanned by CamScanner

Problem 12

Figure 4.15 (a) shows a Casting. Draw to full size scale in first angle method the following :

(a) Front view in the direction *X*.

(b) Top view.

(c) Side view from left.

(Dec. '96, June '01, M.U)

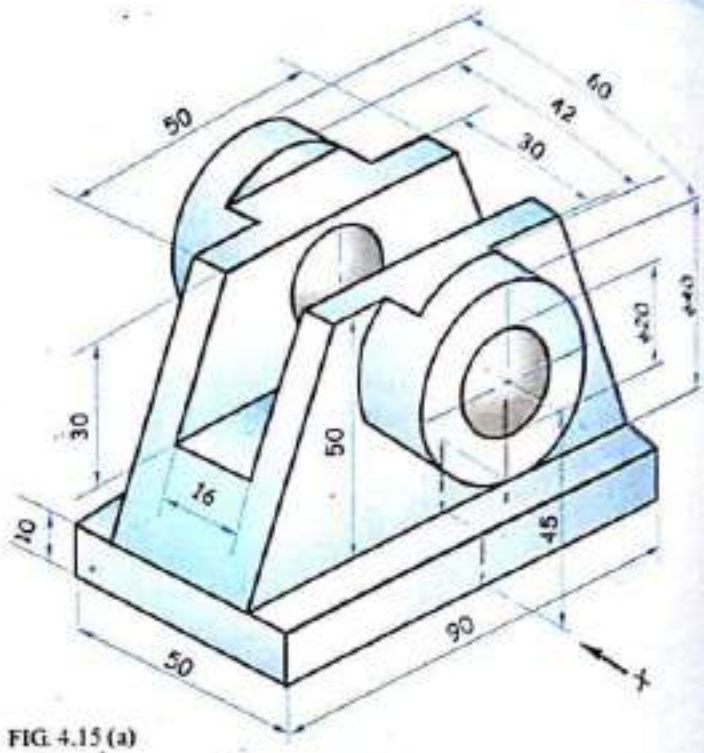

FIG. 4.15 (a)

Solution

Refer figure 4.15 (b).

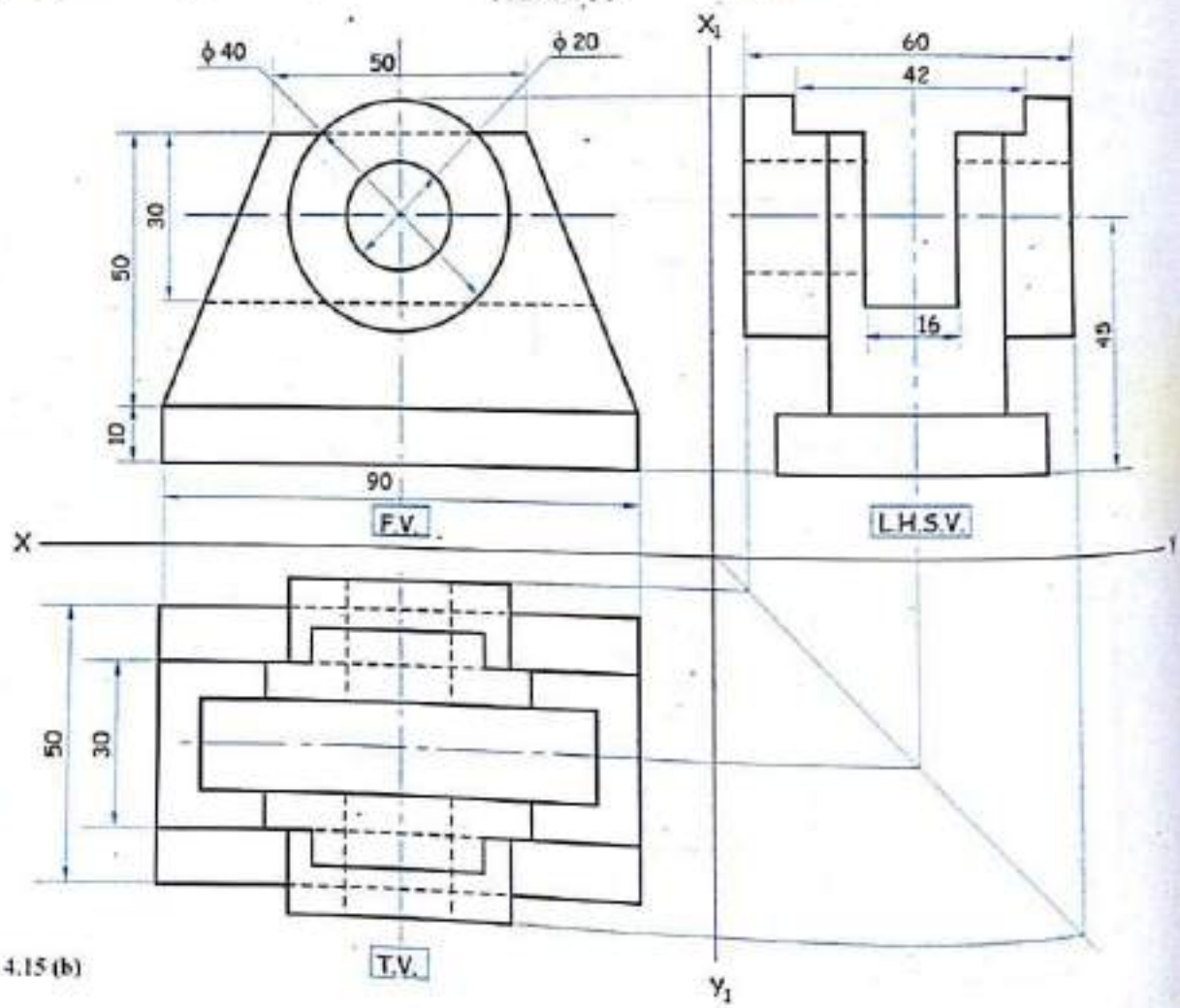

FIG. 4.15 (b)

Scanned by CamScanner

Problem 13

Figure 4.16 (a) shows a Block. Draw the following to scale.

(a) Front view in the direction of arrow *X*.

(b) Side view from left.

(c) Plan. ***(May '97, M.U.)***

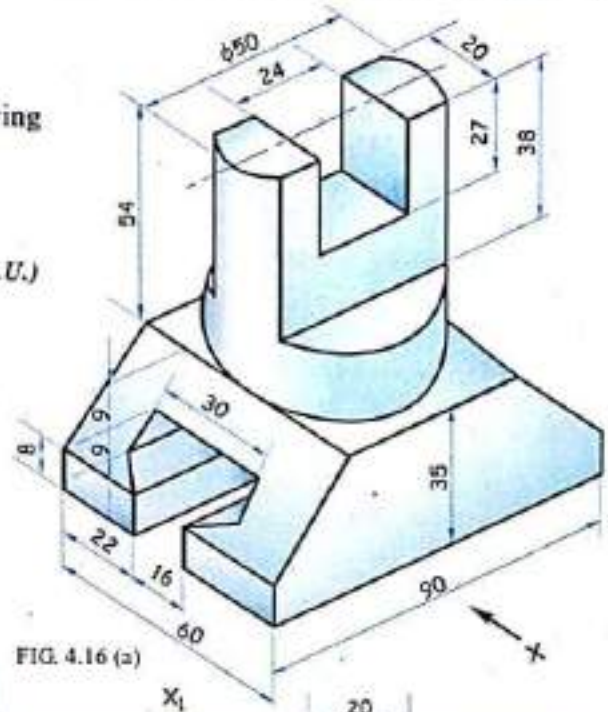

FIG. 4.16 (a)

Solution

Refer figure 4.16 (b).

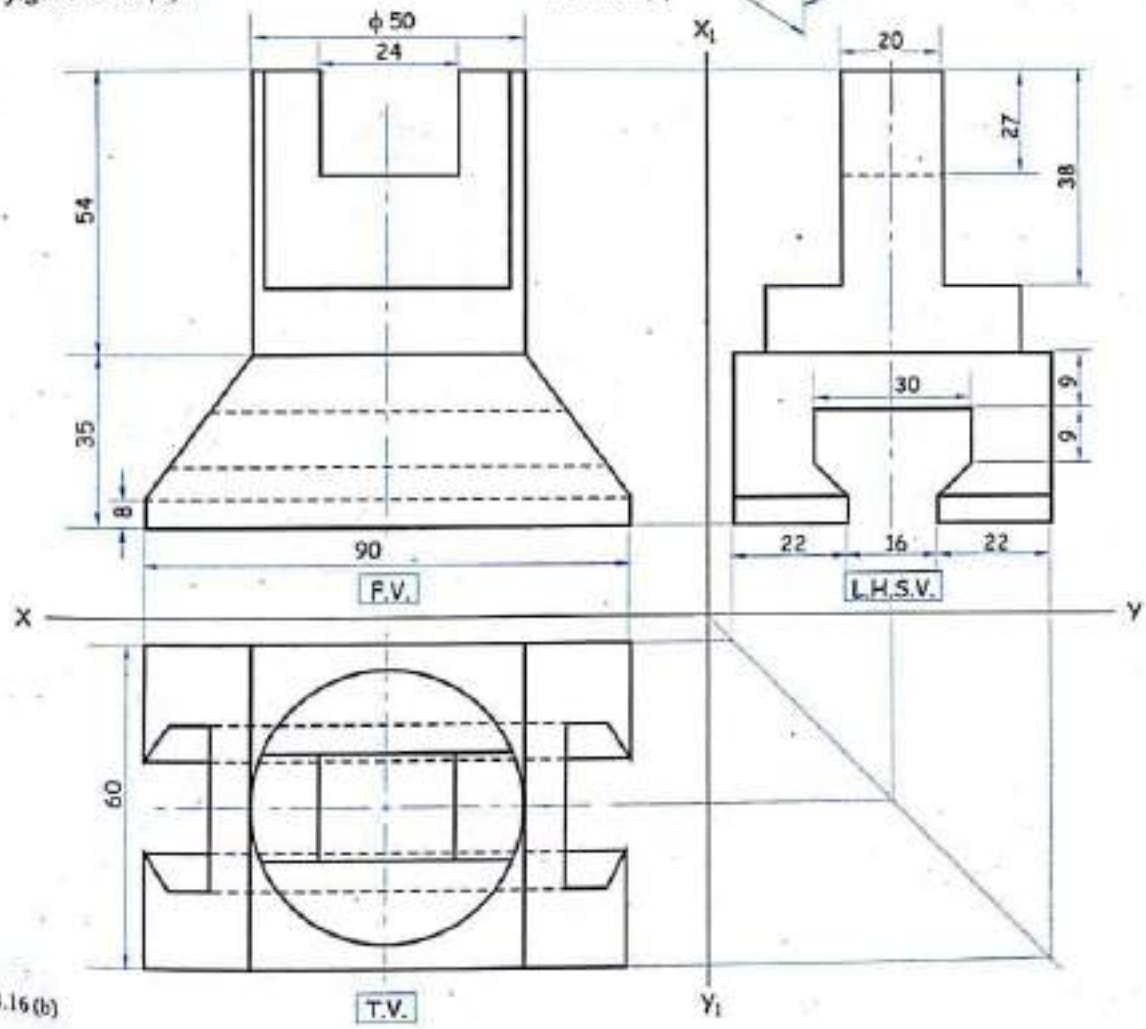

FIG. 4.16 (b)

Scanned by CamScanner

Problem 14

Figure 4.17 (a) shows a pictorial view of a Casting. Using the first angle method of projection, draw the following :

(a) Front view in the direction of an arrow *X*.

(b) View from the above.

(c) Right hand side view.

(Dec. '97, M.U.)

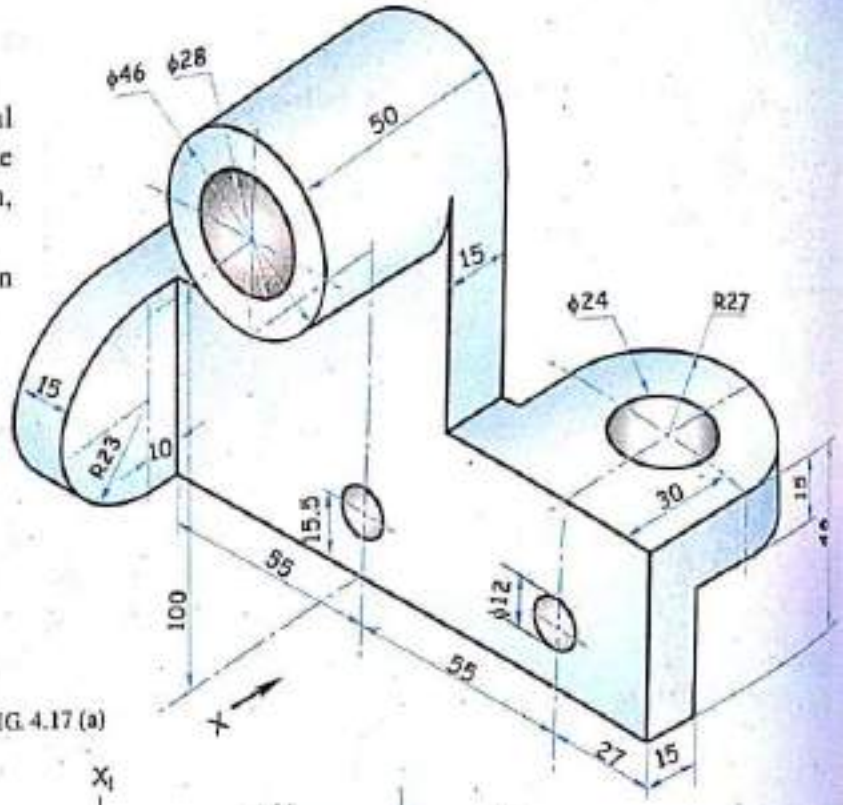

FIG. 4.17 (a)

Solution

Refer figure 4.17 (b).

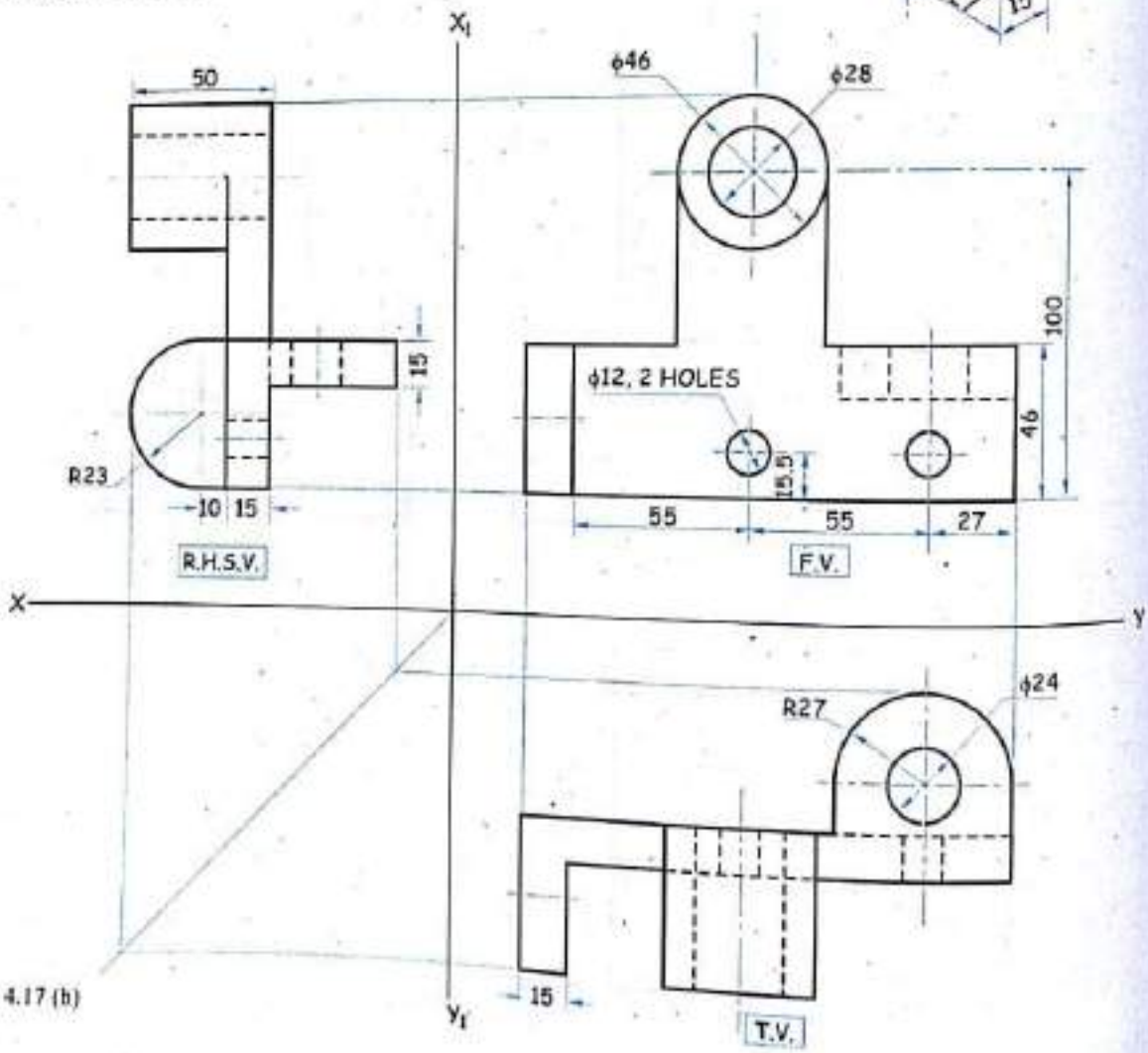

FIG. 4.17 (b)

Scanned by CamScanner

Problem 15

Figure 4.18 (a) shows an isometric view of a Block. Draw the following:

(a) Front view looking in the direction of arrow *X*.

(b) Top view.

(c) Left hand side view.

(May '98, M.U.)

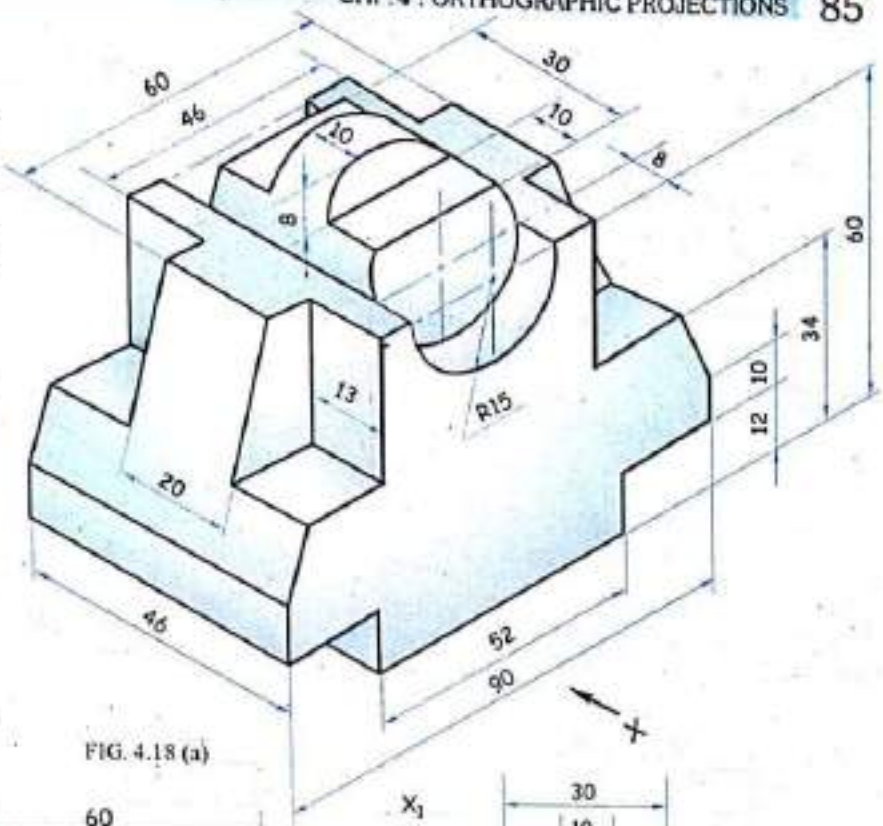

FIG. 4.18 (a)

Solution

Refer figure 4.18 (b).

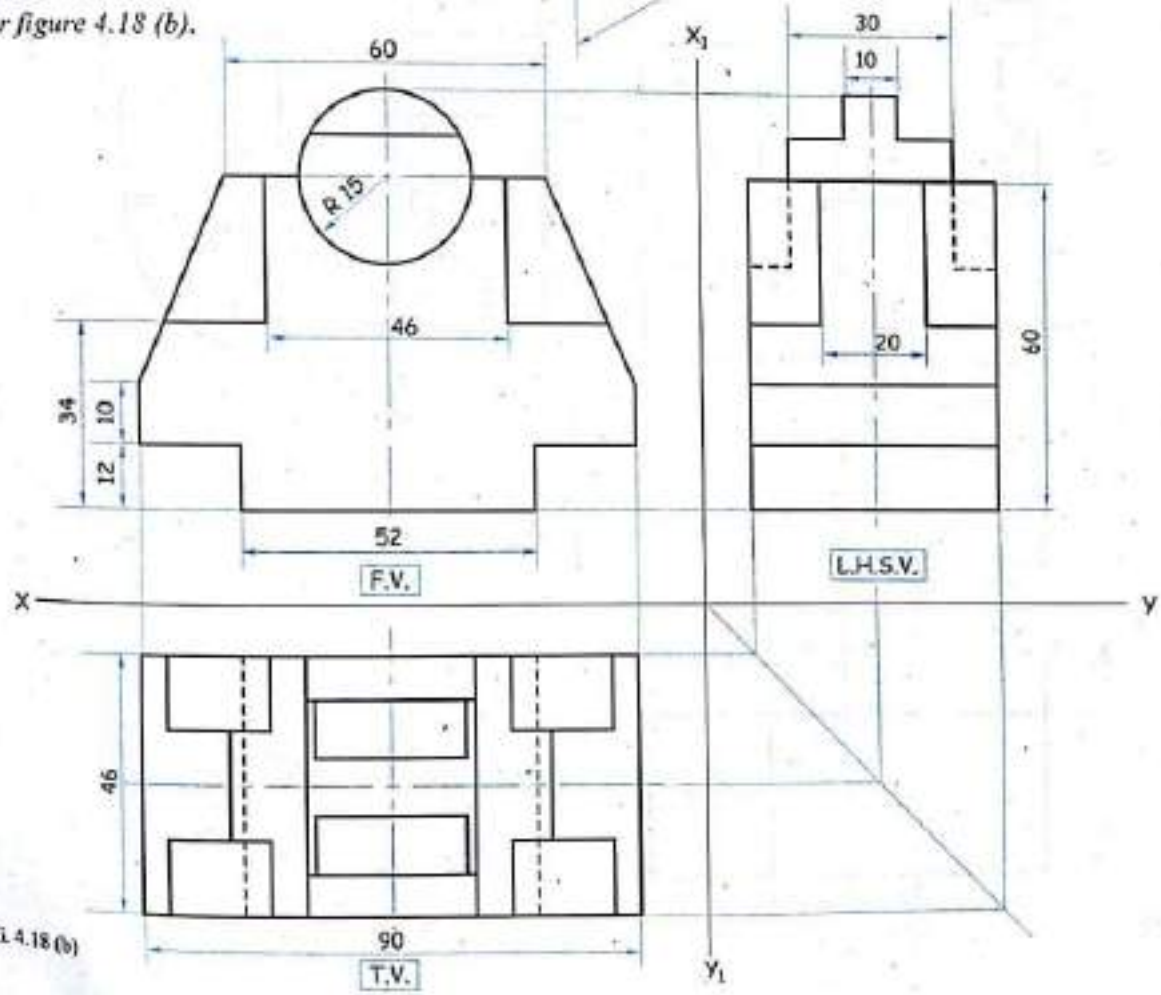

FIG. 4.18 (b)

Scanned by CamScanner

Problem 16

Figure 4.19 (a) shows an Object. Draw the following views by according to first angle convention.

(a) Front view.

(b) Left side view.

(c) Top view.

(Dec. '98, M.U.)

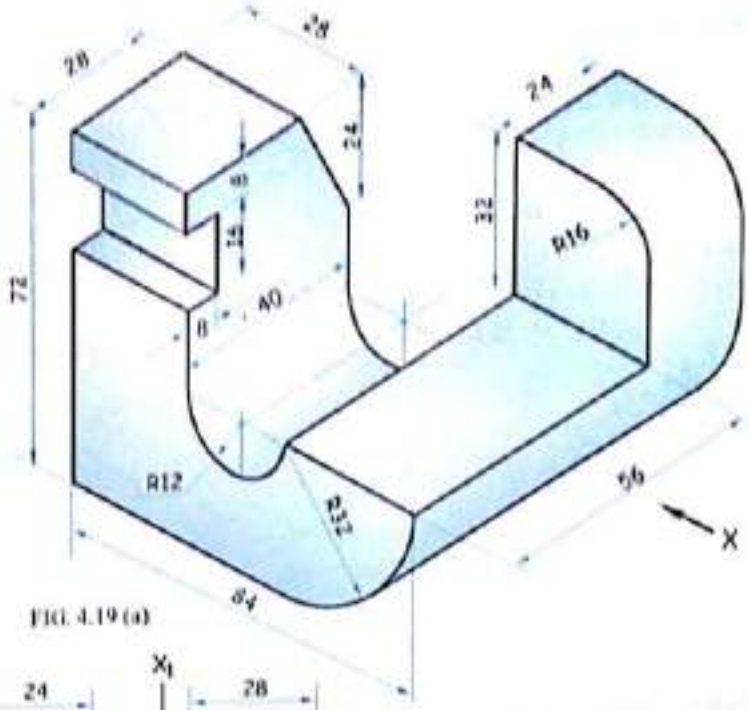

FIG. 4.19 (a)

Solution

Refer figure 4.19 (b).

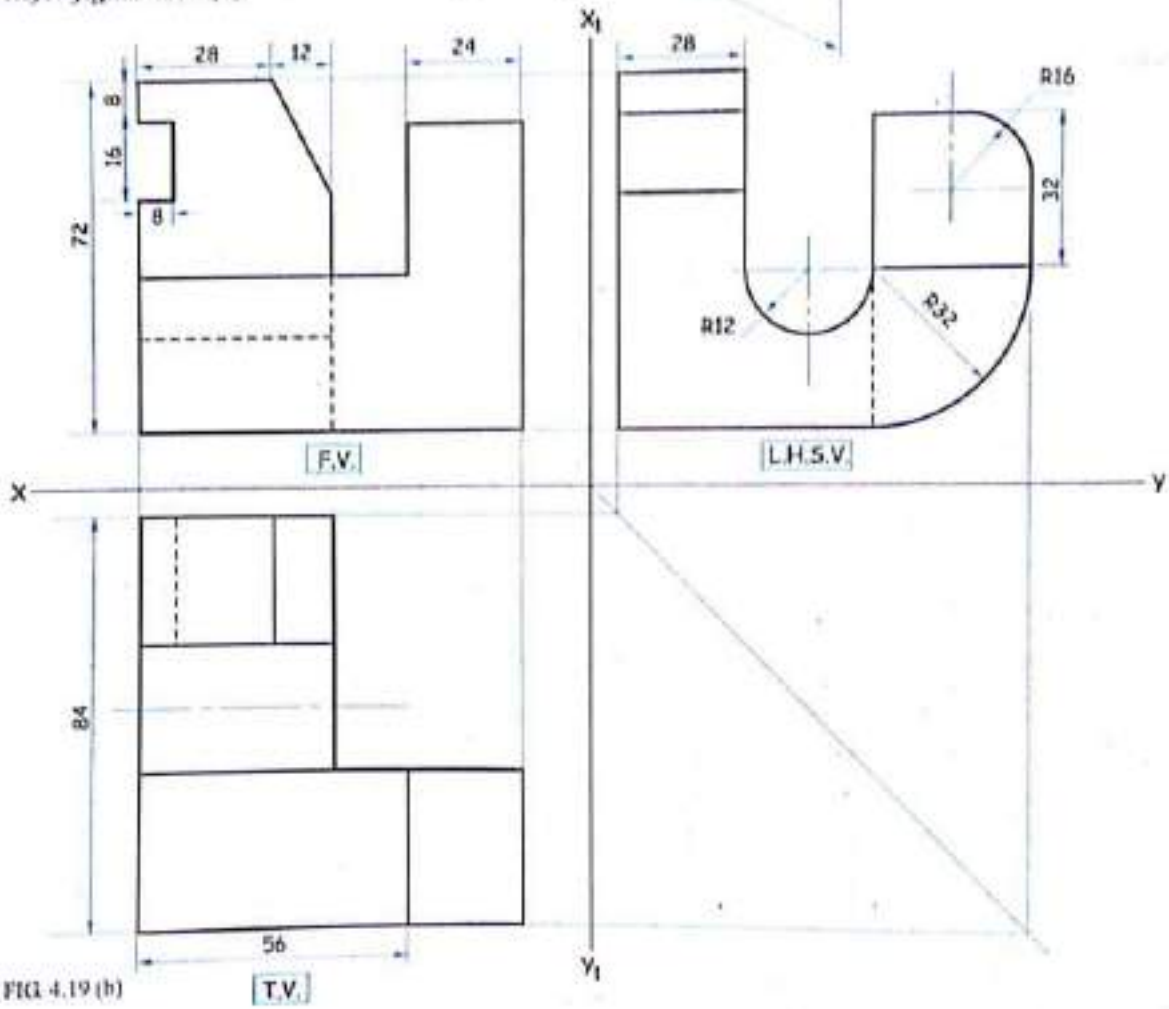

FIG. 4.19 (b)

Scanned by CamScanner

Problem 17

Figure 4.20 (a) shows a *Block*. Draw the following to full scale.
(a) Front view in the direction *X*.
(b) Right side view.
(c) Top view.

(May '99, M.U.)

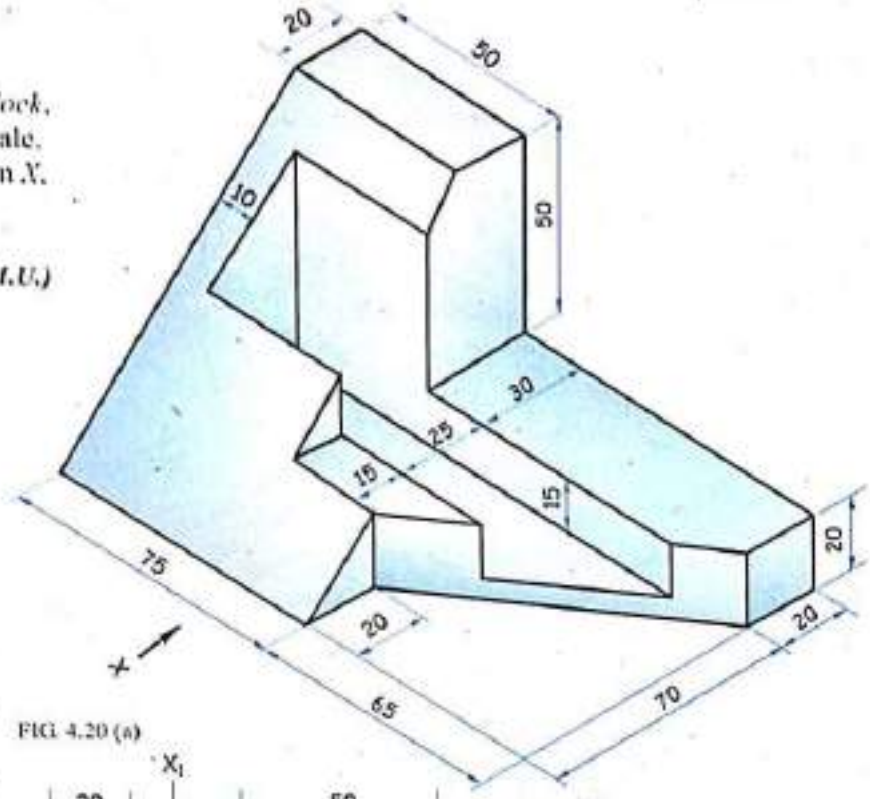

FIG. 4.20 (a)

Solution

Refer figure 4.20 (b).

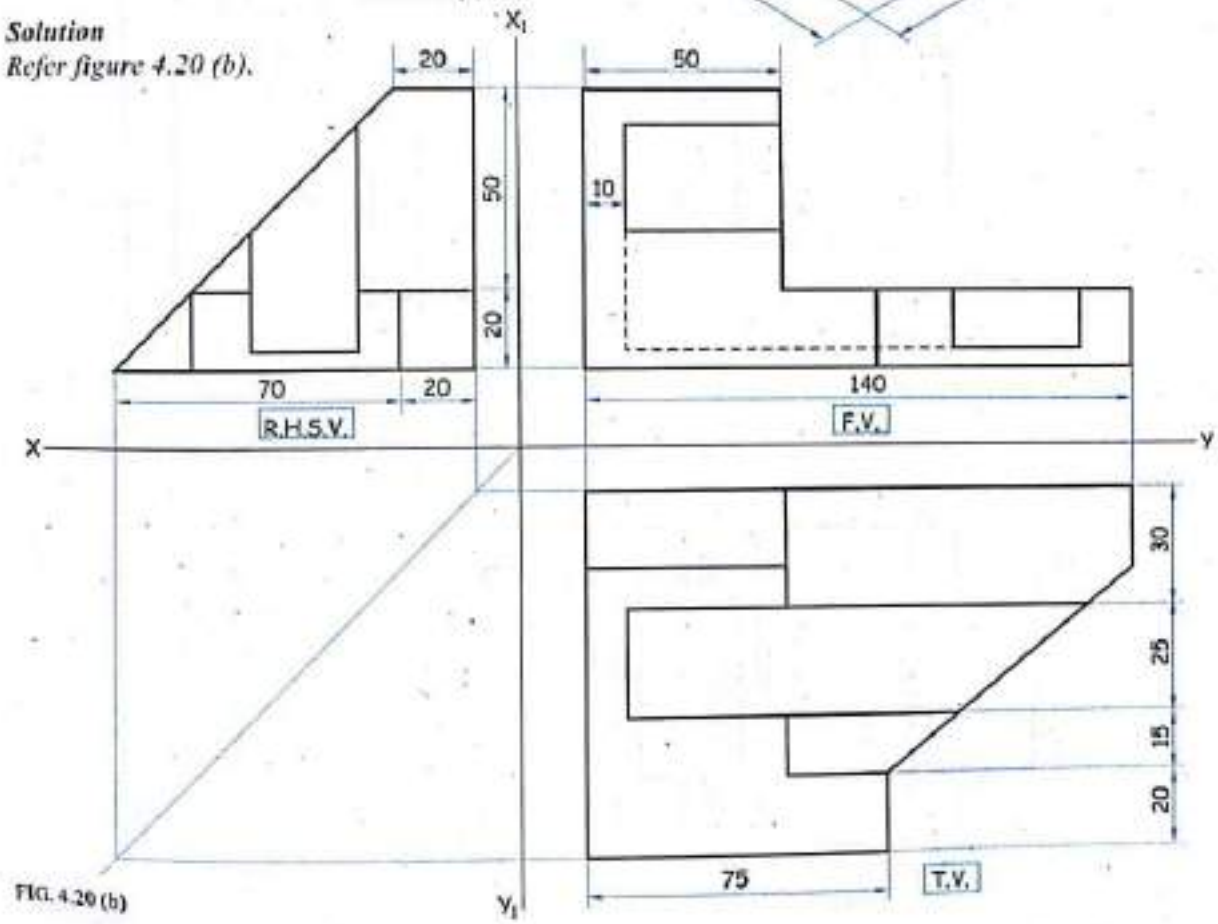

FIG. 4.20 (b)

Scanned by CamScanner

Problem 18

Figure 4.21 (a) shows an isometric drawing of a Block. Draw the following :

(a) Front view in the direction of arrow *X*.

(b) View from left.

(c) Top view.

(Dec. '99, M.U.)

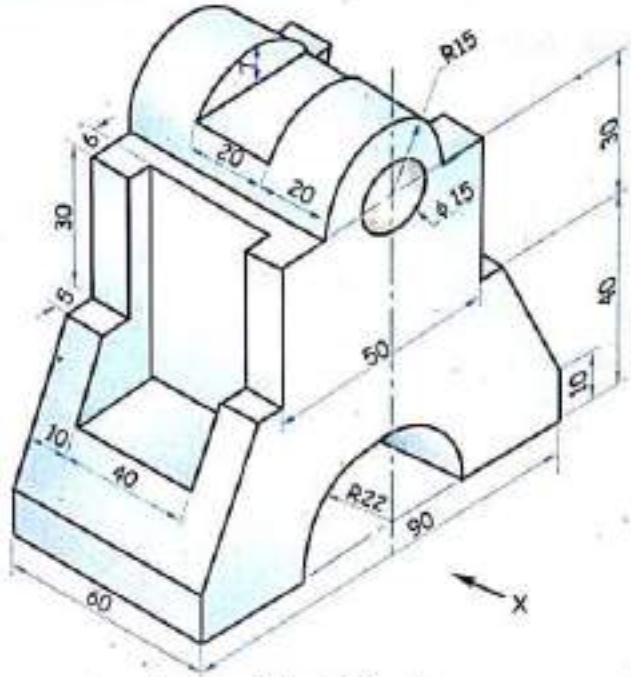

FIG. 4.21 (a)

Solution

Refer figure 4.21 (b).

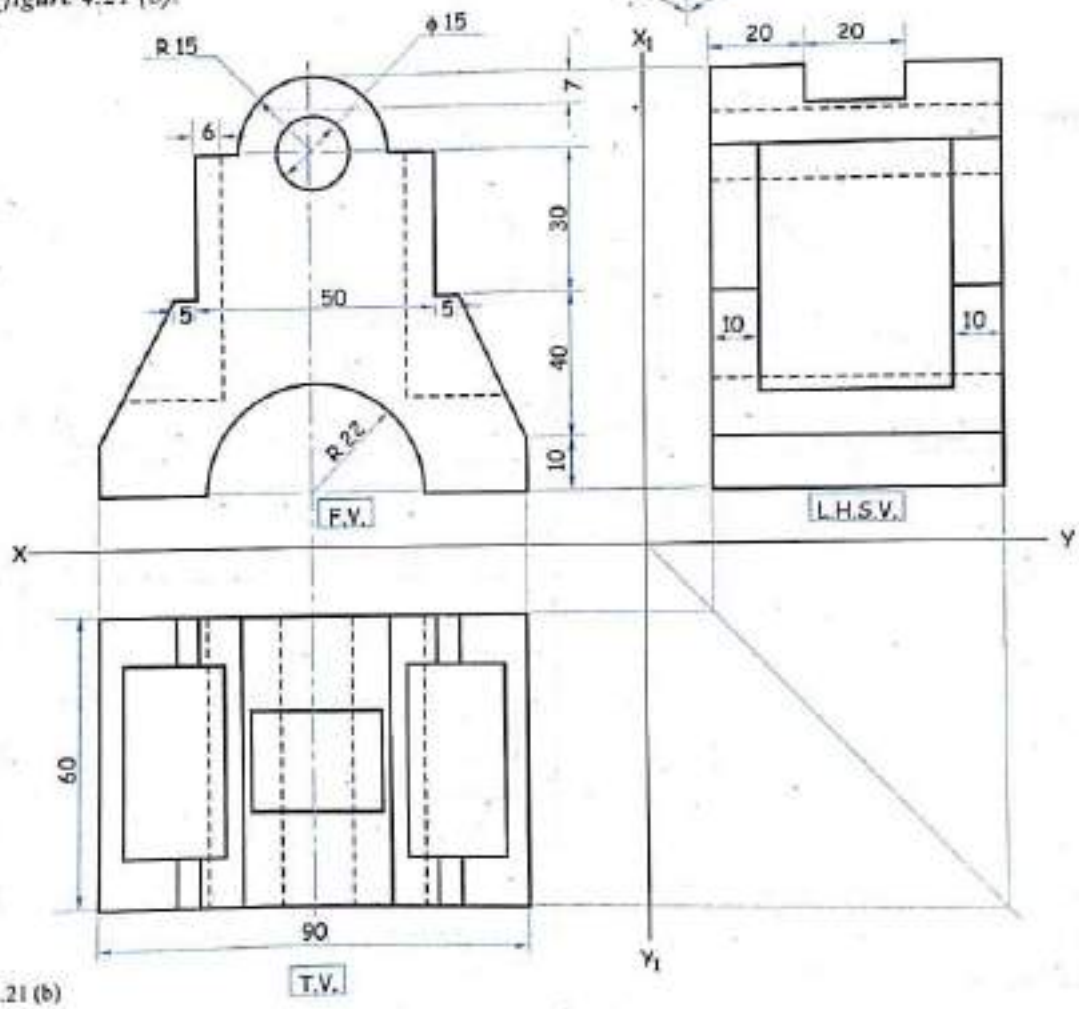

FIG 4.21 (b)

Scanned by CamScanner

Problem 19

For the object shown in *figure 4.22 (a)*. Draw the following views:

(a) Front view in the direction of arrow *X*.

(b) Side view from the left.

(c) Top view.

Give all the hidden lines in all the views.

(May 2000, M.U.)

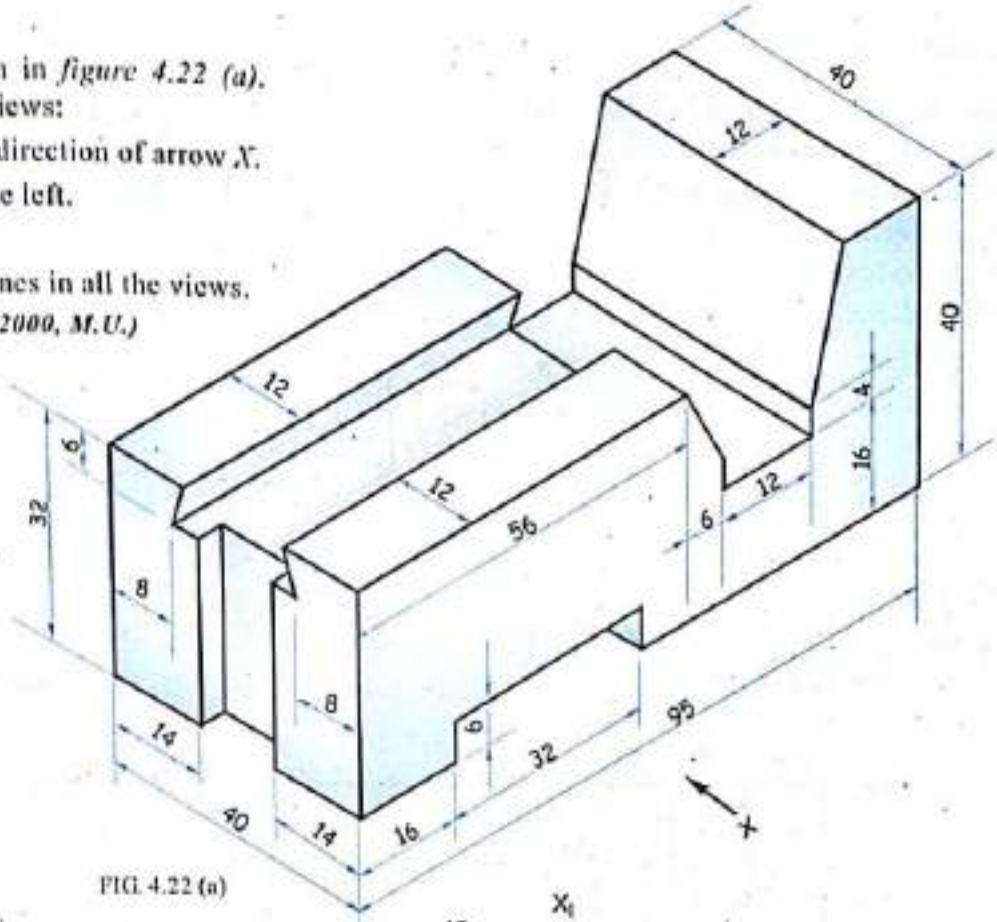

FIG. 4.22 (a)

Solution

Refer figure 4.22 (b).

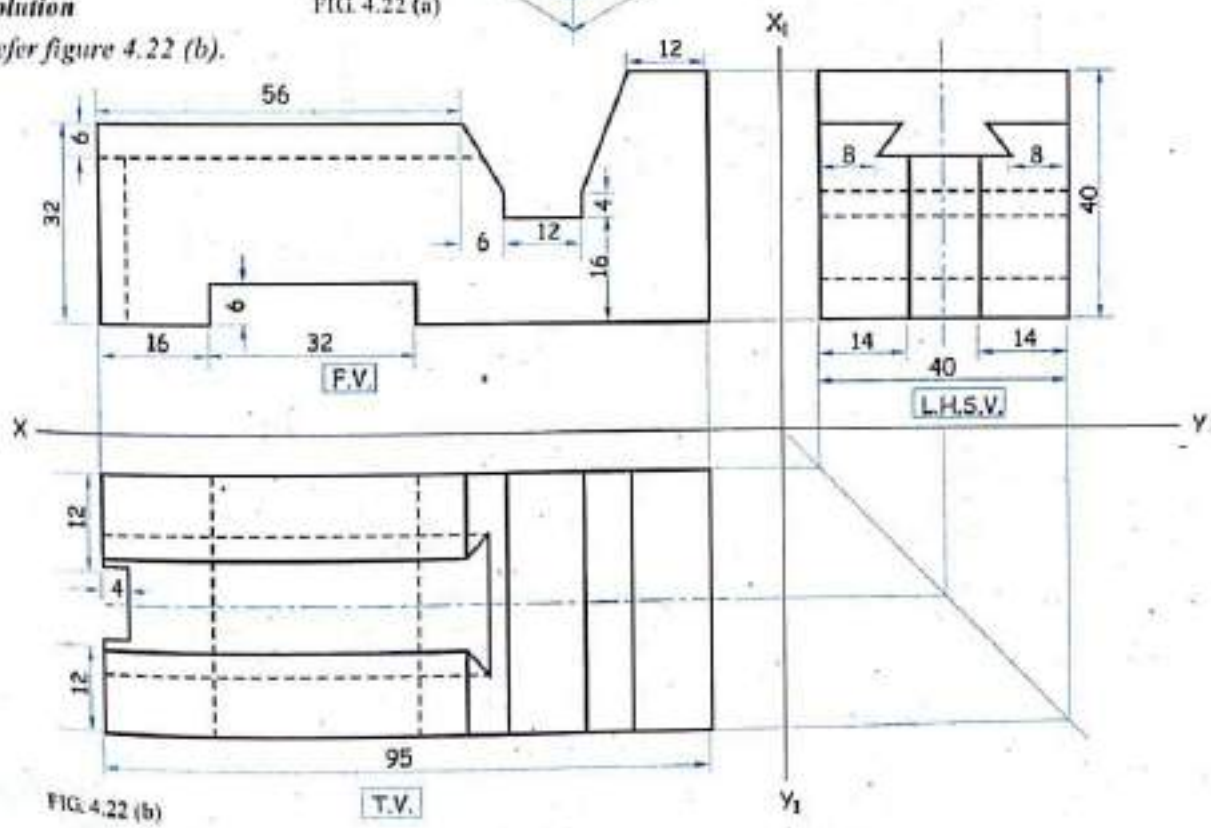

FIG. 4.22 (b)

Scanned by CamScanner

Problem 20

For the object shown in *figure 4.23 (a)*, draw the following views:

(a) Front view looking in direction *X*.

(b) Right hand side view.

(c) Top view.

Draw all the hidden lines also.

(Dec. '01, M.U.)

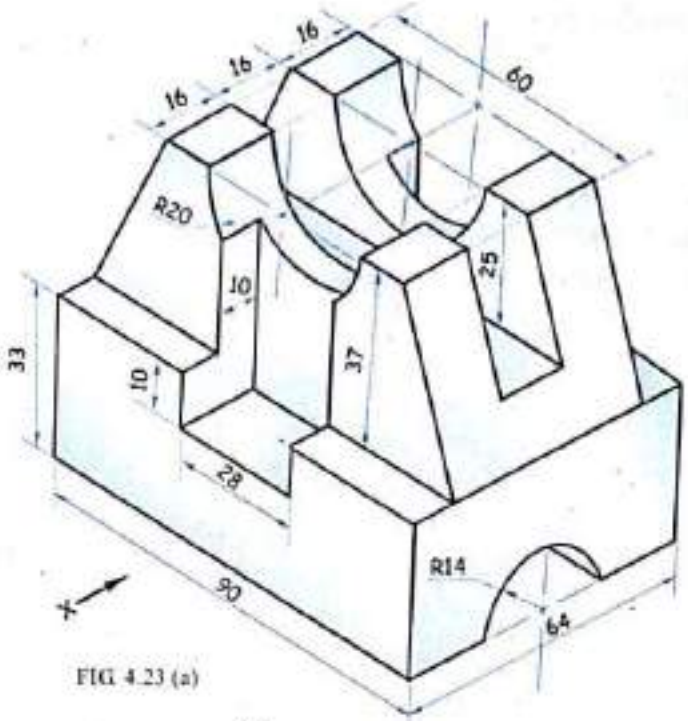

FIG. 4.23 (a)

Solution

Refer figure 4.23 (b).

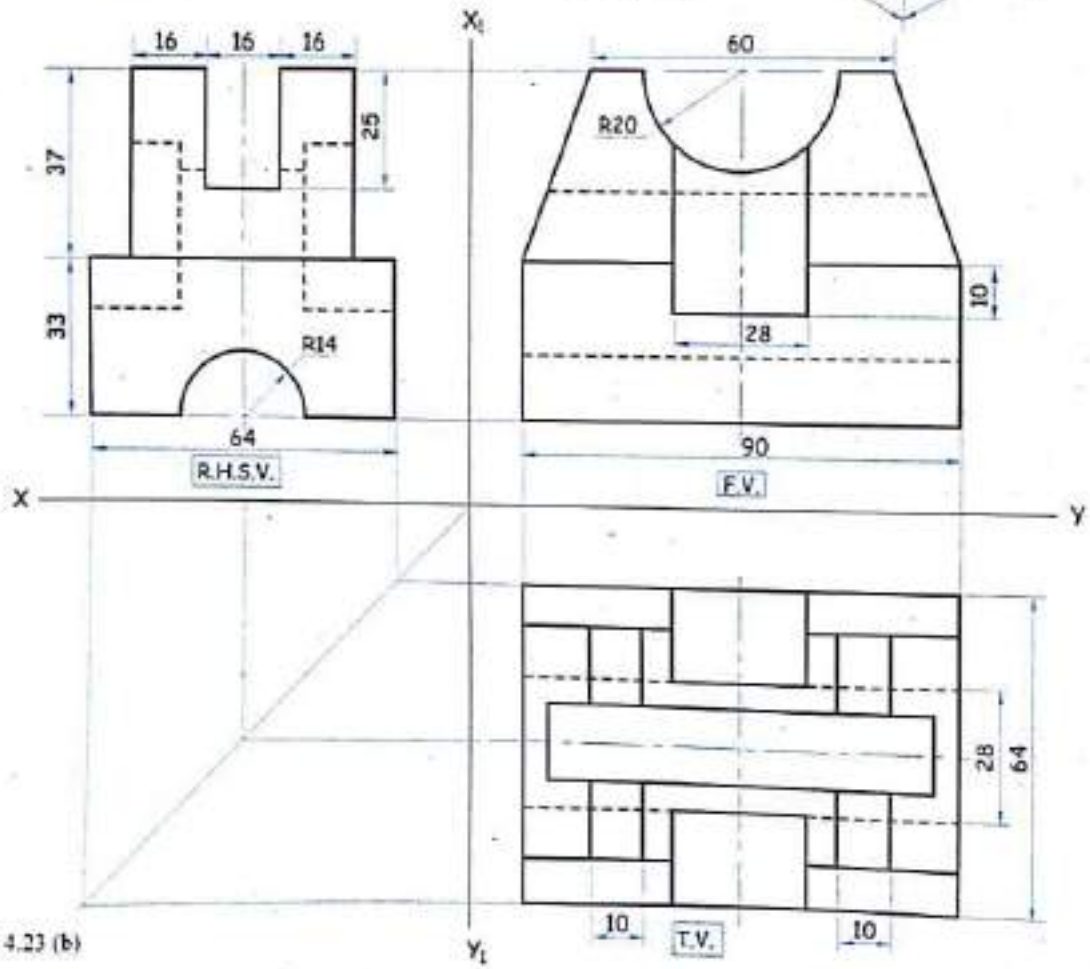

FIG. 4.23 (b)

Scanned by CamScanner

4.5 Exercise II

1. Draw F.V., T.V. and L.H.S.V.

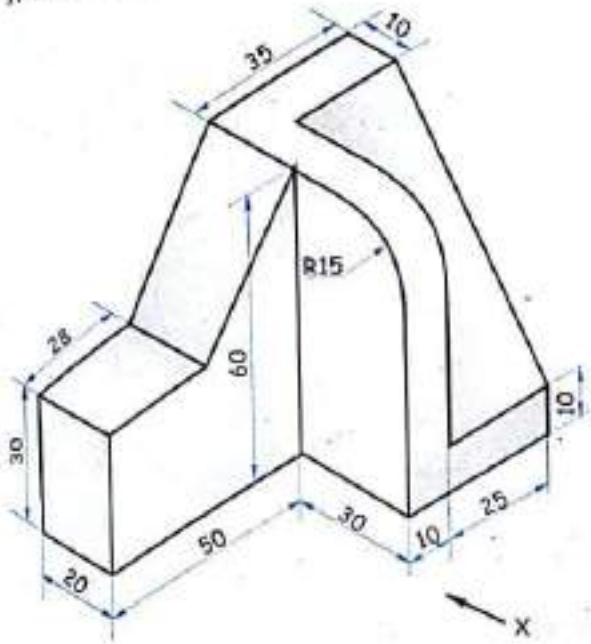

FIG 4.24

2. Draw F.V., T.V. and R.H.S.V.

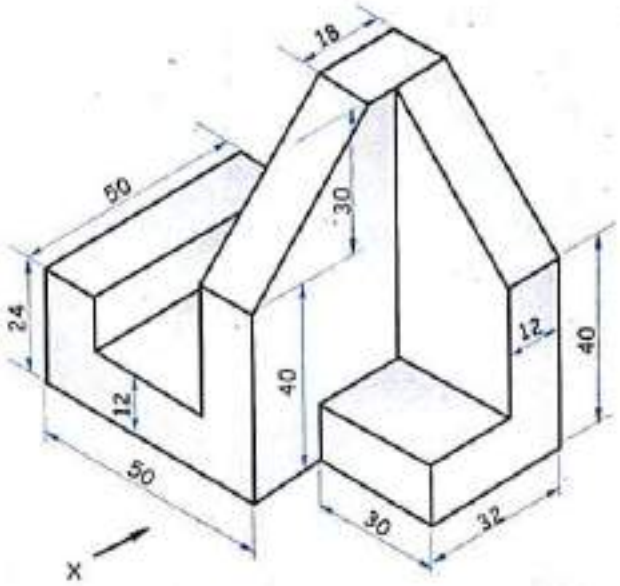

FIG. 4.25

3. Draw F.V., T.V. and L.H.S.V.

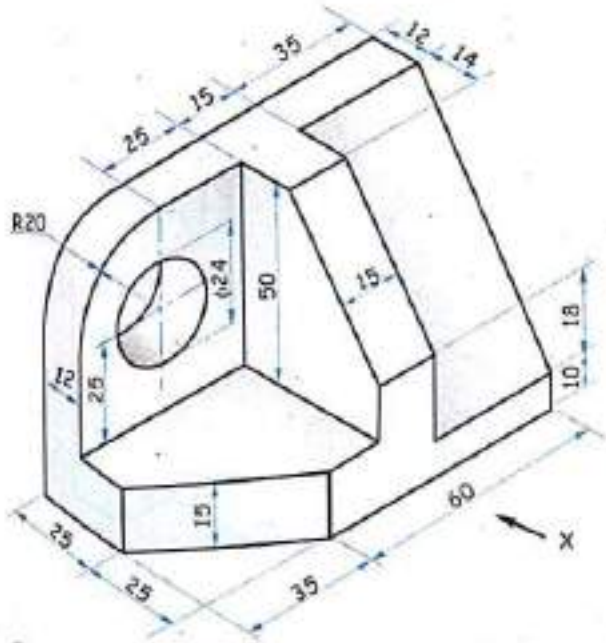

FIG 4.26

4. Draw F.V., T.V. and R.H.S.V.

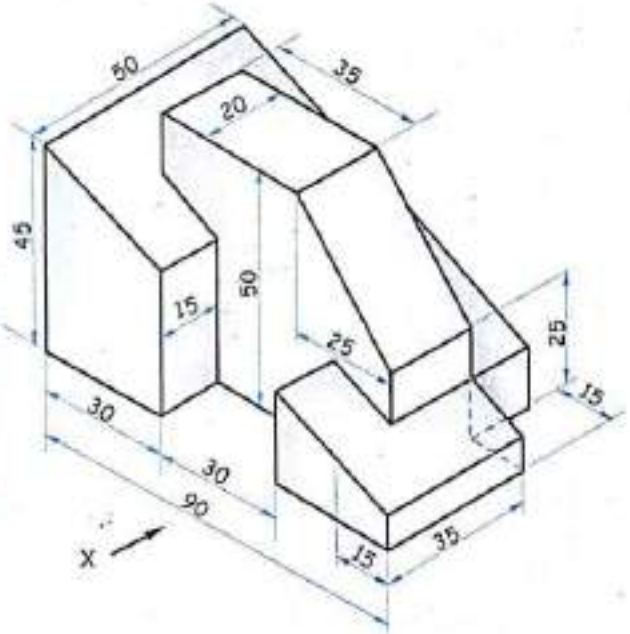

FIG. 4.27

Scanned by CamScanner

5. Draw F.V., T.V. and R.H.S.V.

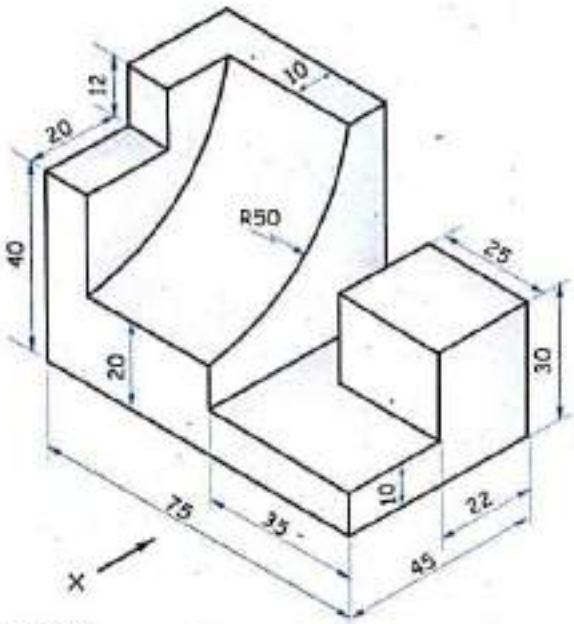

FIG. 4.28

6. Draw F.V., T.V. and L.H.S.V.

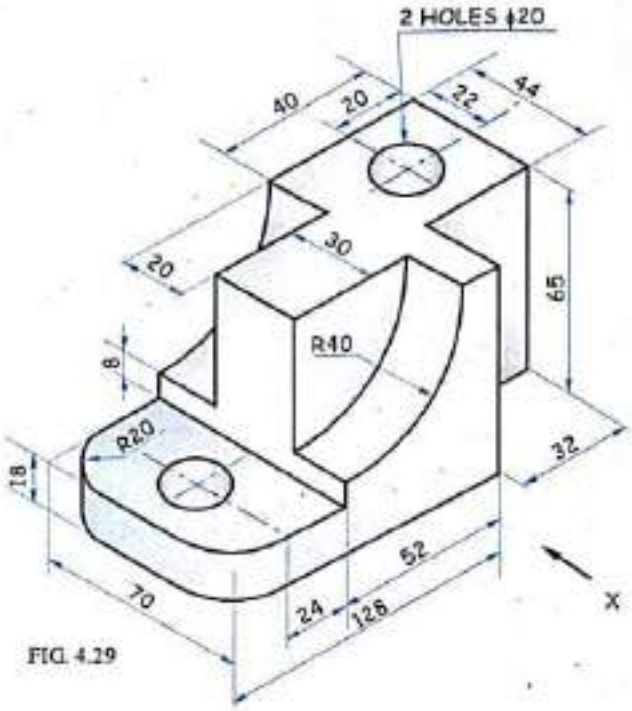

FIG. 4.29

7. Draw F.V., T.V. and L.H.S.V.

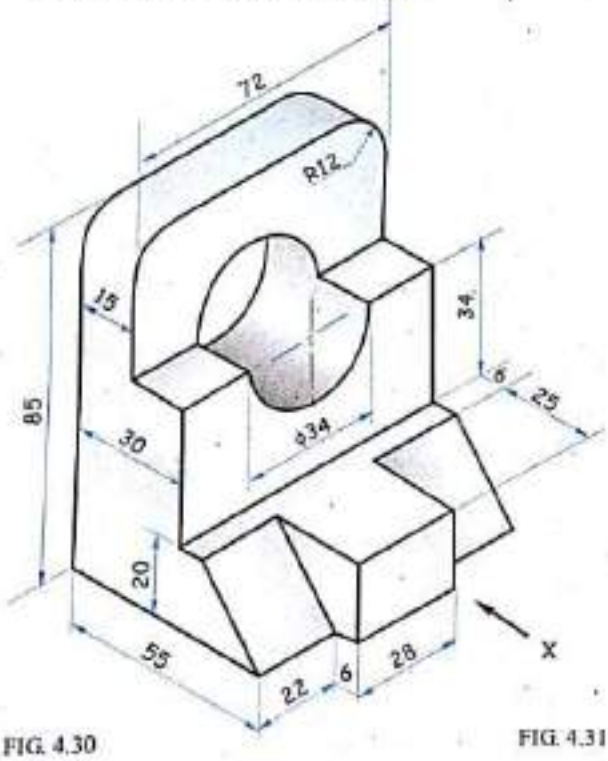

FIG. 4.30

8. Draw F.V., T.V. and R.H.S.V.

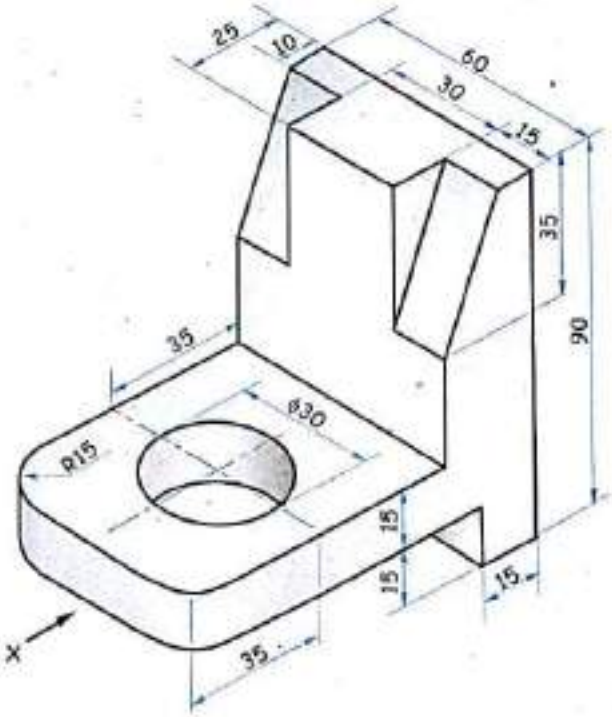

FIG. 4.31

Scanned by CamScanner

9. Draw F.V., T.V. and L.H.S.V.

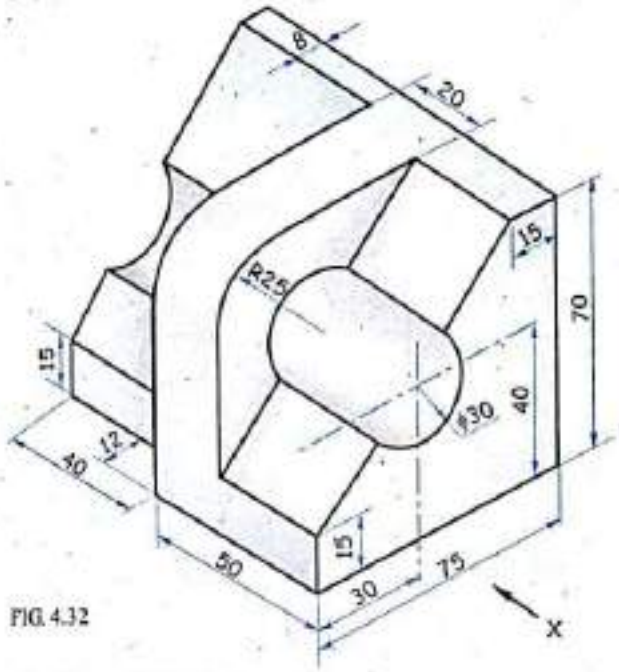

FIG. 4.32

10. Draw F.V., T.V. and L.H.S.V.

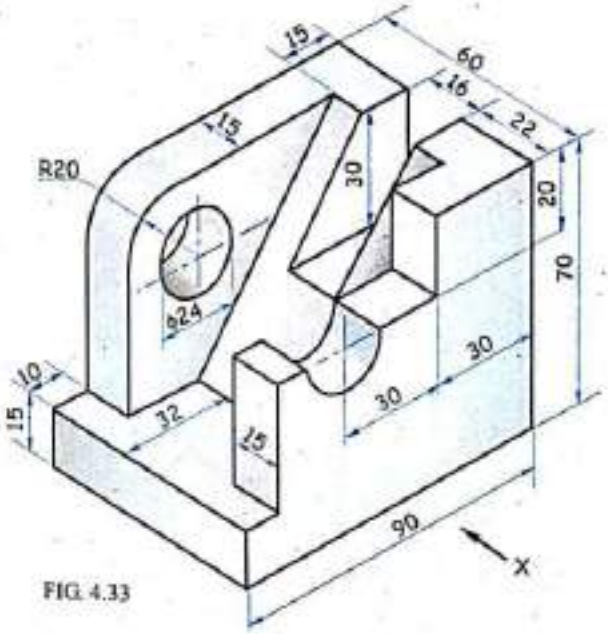

FIG. 4.33

11. Draw F.V., T.V. and L.H.S.V.

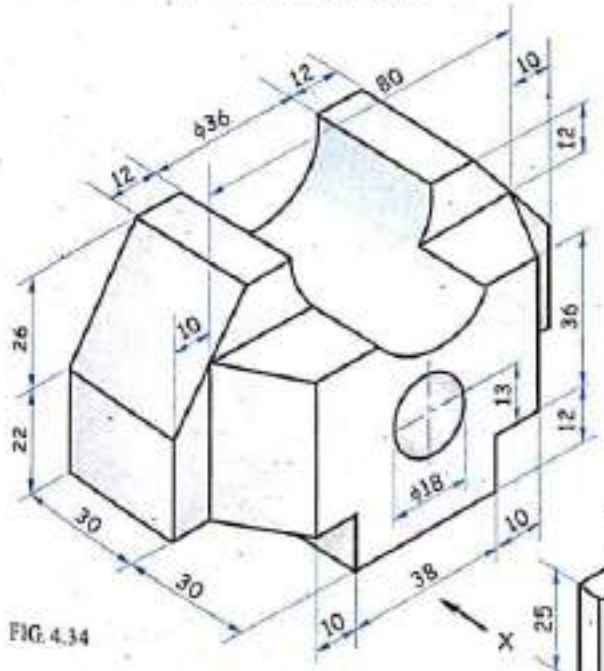

FIG. 4.34

12. Draw F.V., T.V. and L.H.S.V.

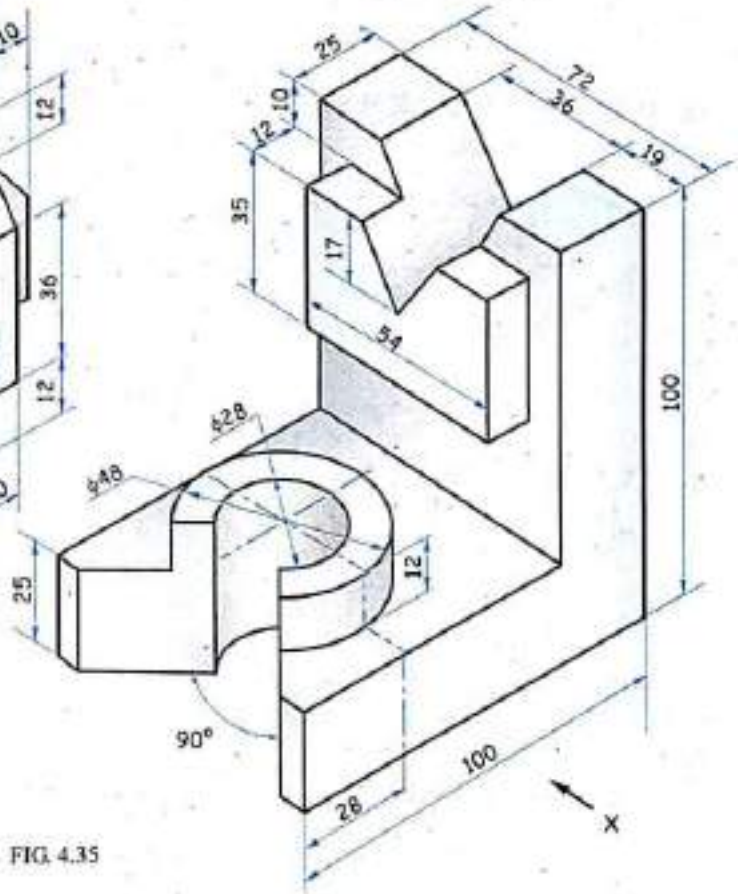

FIG. 4.35

Scanned by CamScanner

13. Draw F.V., T.V. and R.H.S.V.

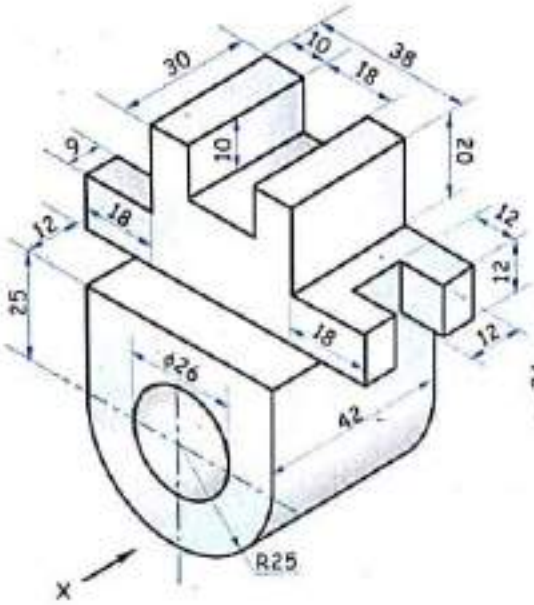

FIG. 4.36

14. Draw F.V., T.V. and L.H.S.V.

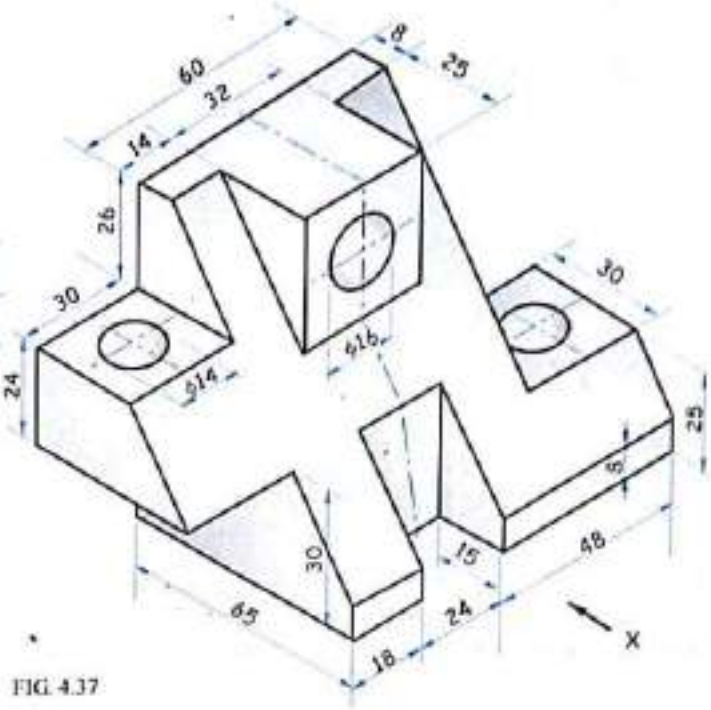

FIG. 4.37

15. Draw F.V., T.V. and R.H.S.V.

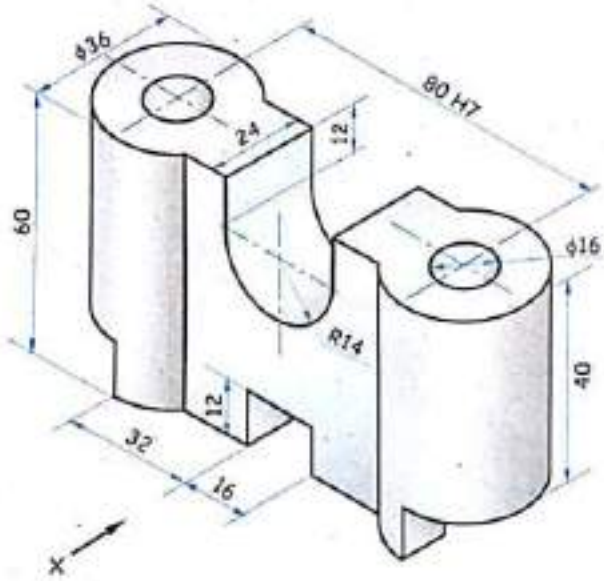

FIG. 4.38

16. Draw F.V., T.V. and L.H.S.V.

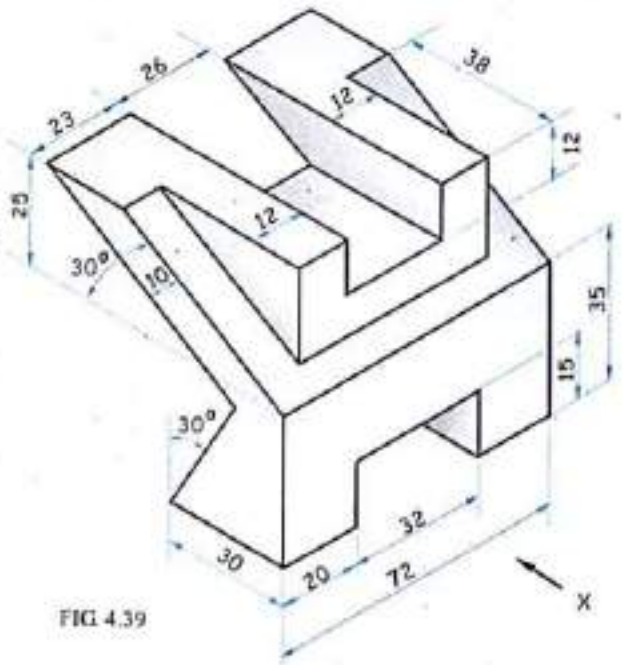

FIG. 4.39

Scanned by CamScanner

17. Draw F.V., T.V. and R.H.S.V.

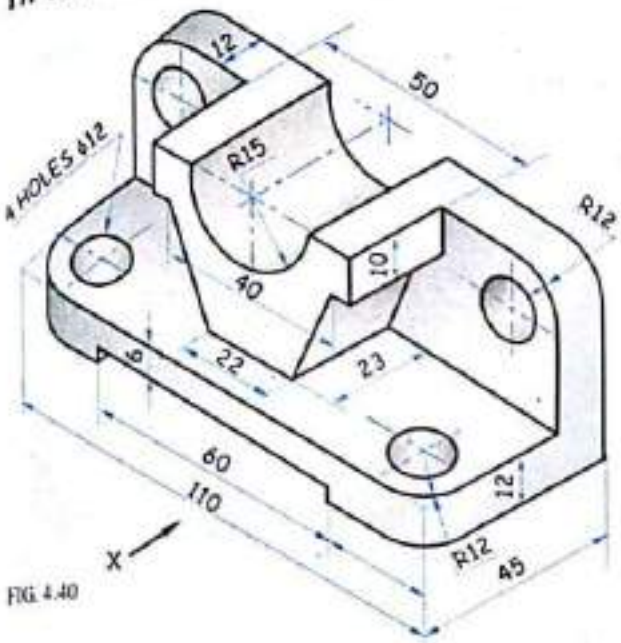

FIG. 4.40

18. Draw F.V., T.V. and R.H.S.V.

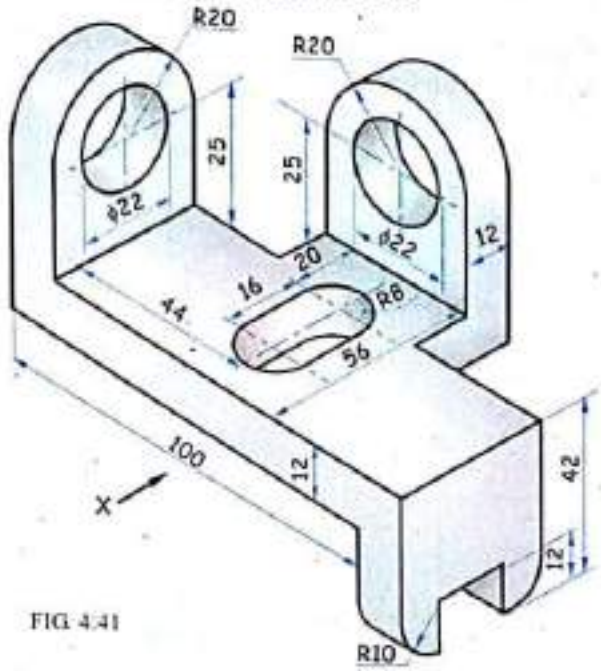

FIG. 4.41

19. Draw F.V., T.V. and L.H.S.V.

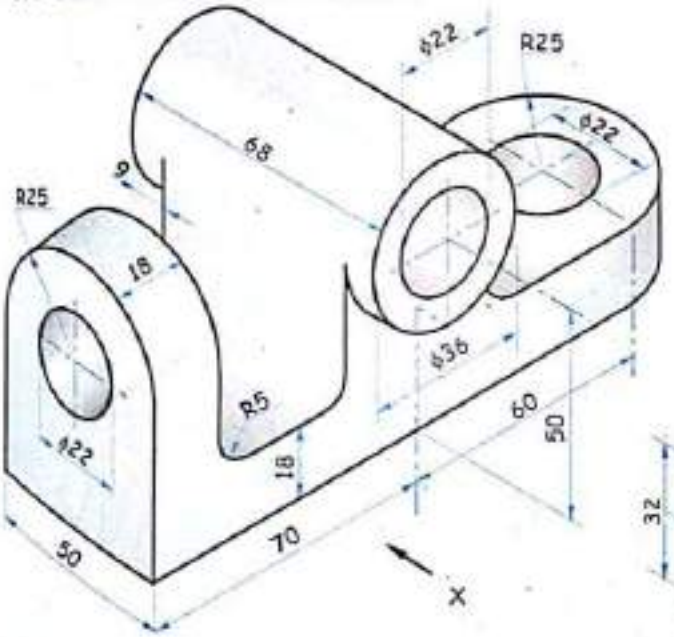

FIG. 4.42

20. Draw F.V., T.V. and R.H.S.V.

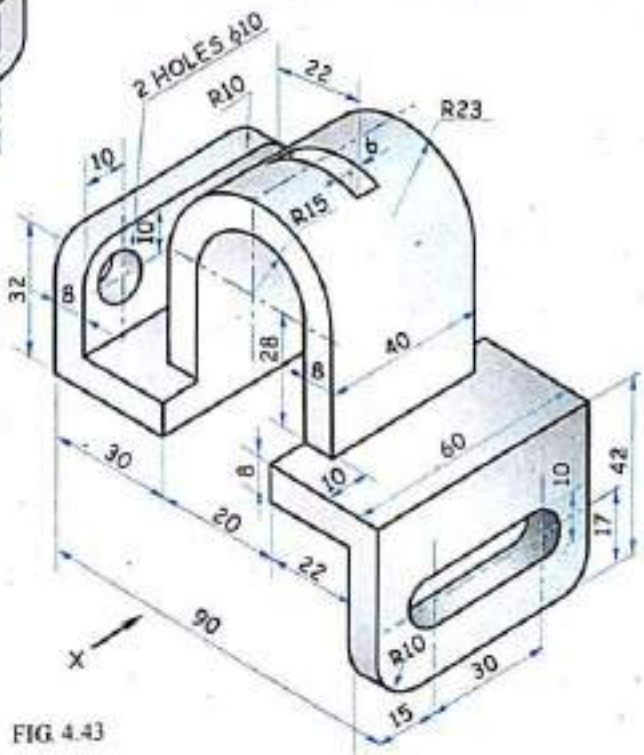

FIG. 4.43

Scanned by CamScanner

4.6 Exercise III

Figures shows pictorial view of an Object. Using first angle method of projection draw for all the figures given below : (a) Front view (b) Side view (c) Top view.

1.

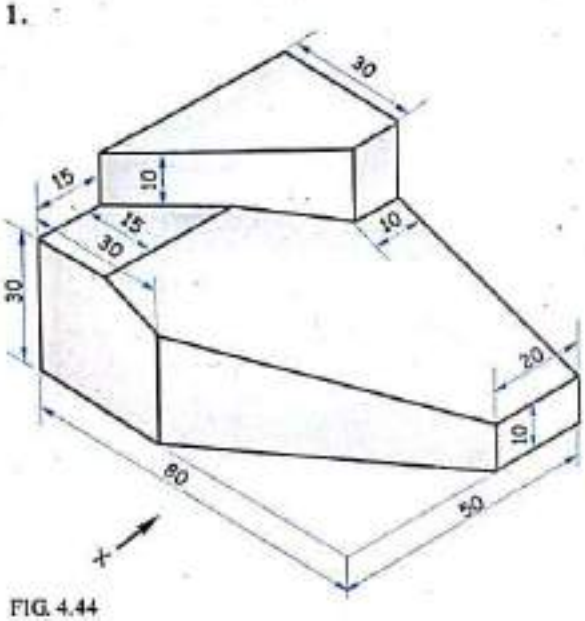

FIG. 4.44

2.

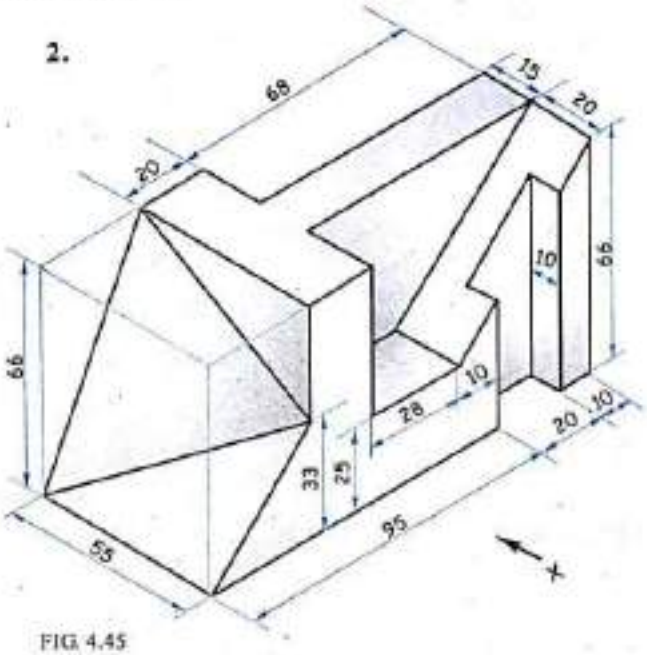

FIG. 4.45

3.

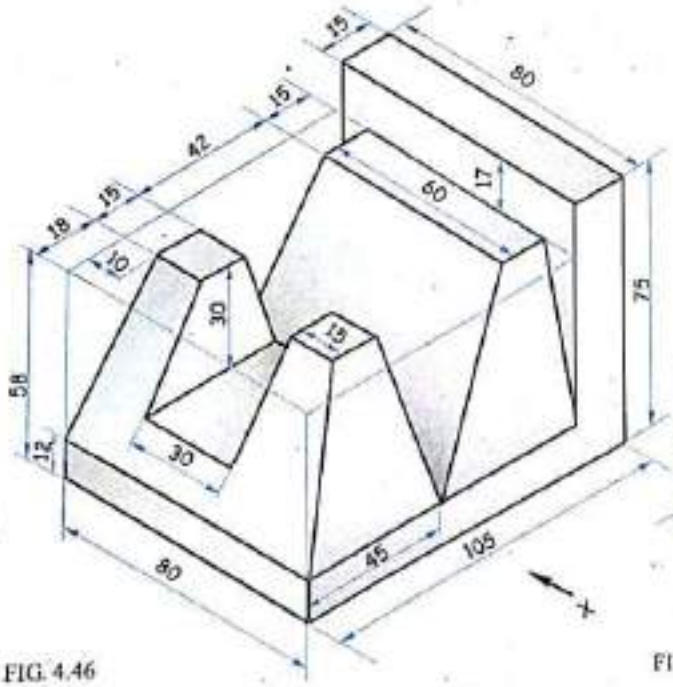

FIG. 4.46

4.

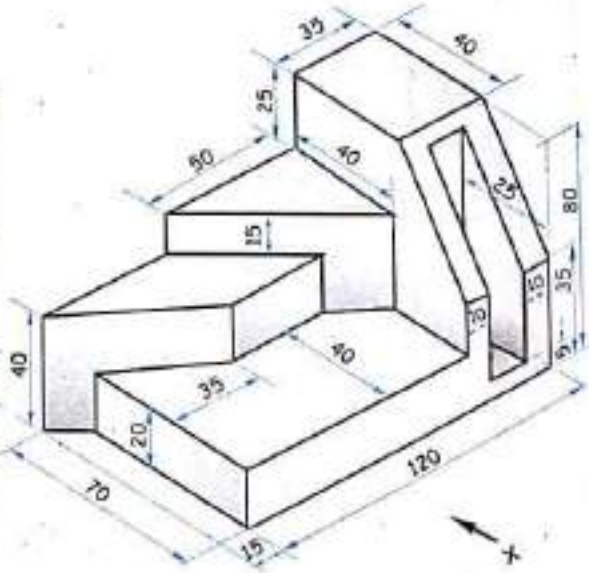

FIG. 4.47

Scanned by CamScanner

5.

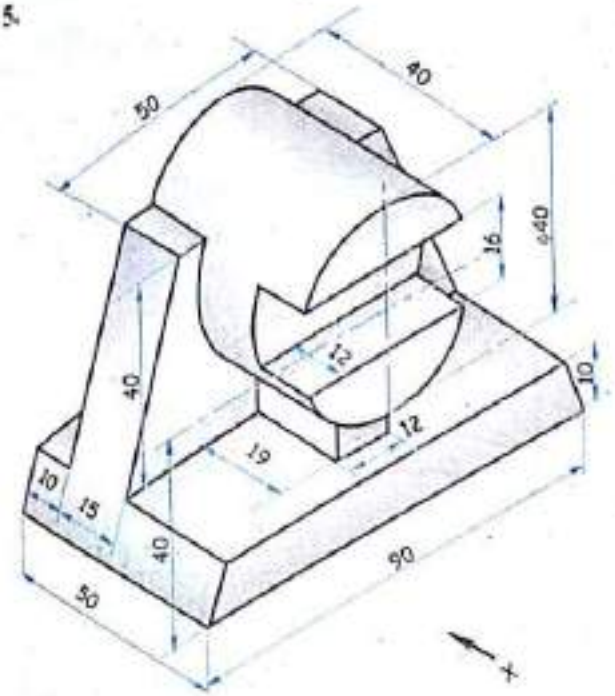

FIG. 4.48

6.

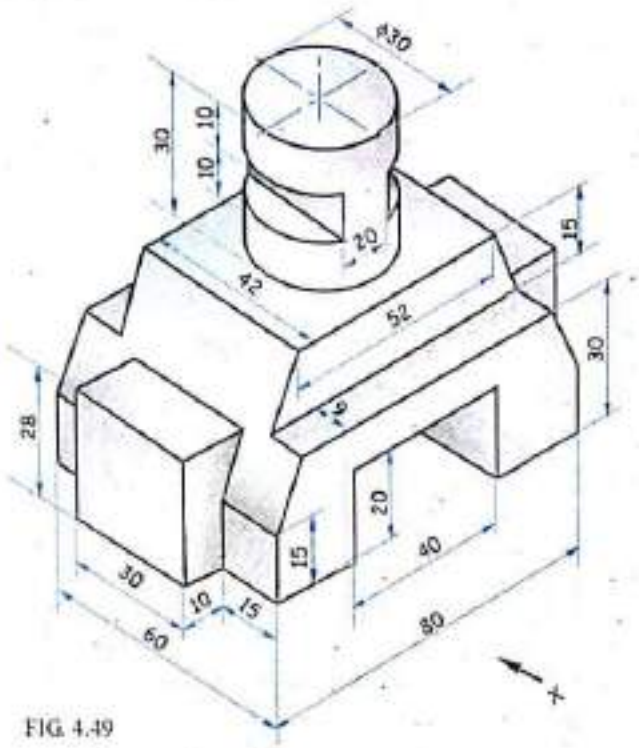

FIG. 4.49

7.

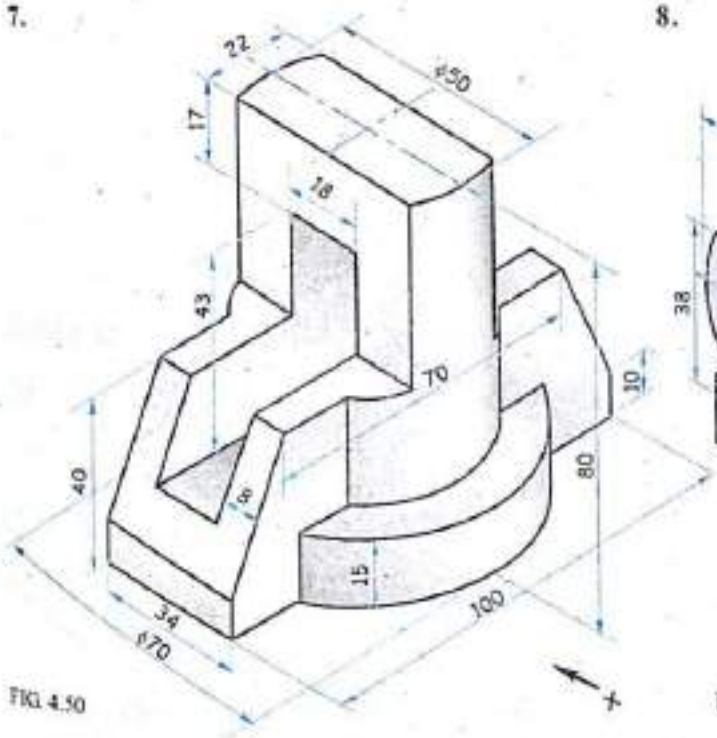

FIG. 4.50

8.

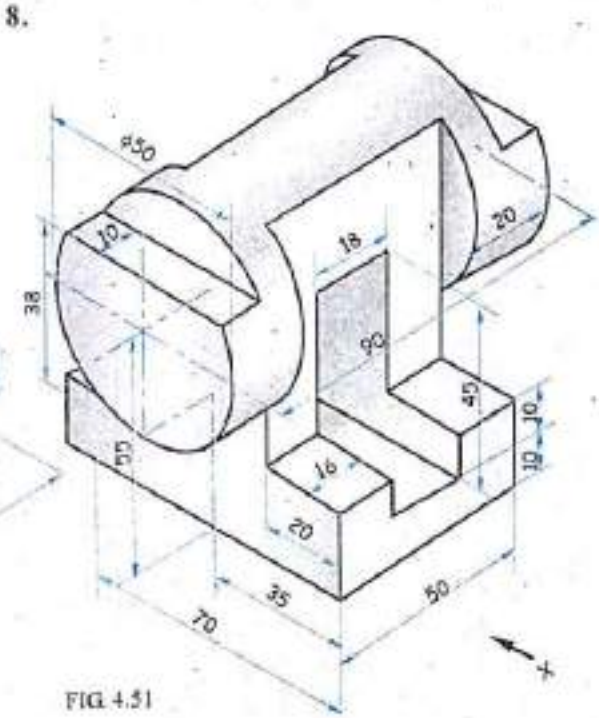

FIG. 4.51

Note : *Refer Appendix A for solutions.*

Scanned by CamScanner

4.7 Exercise IV

Figures shows pictorial view of an Object. Using first angle method of projection draw for all the figures given below : (a) Front view (b) Side view (c) Top view.

1.

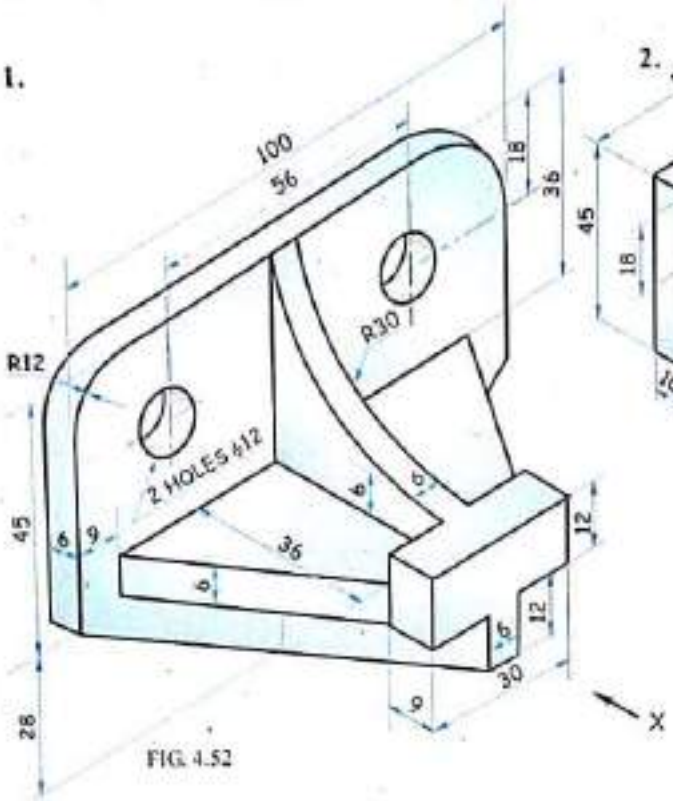

FIG. 4.52

2.

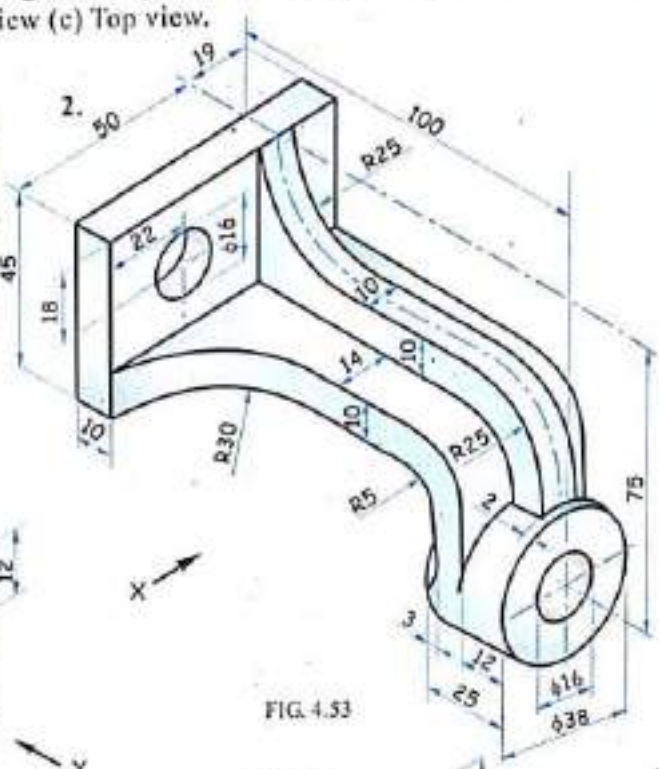

FIG. 4.53

3.

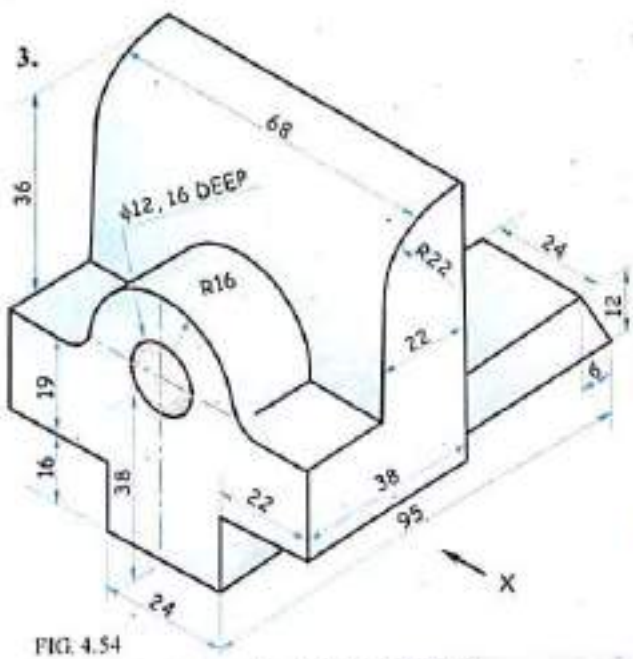

FIG. 4.54

4.

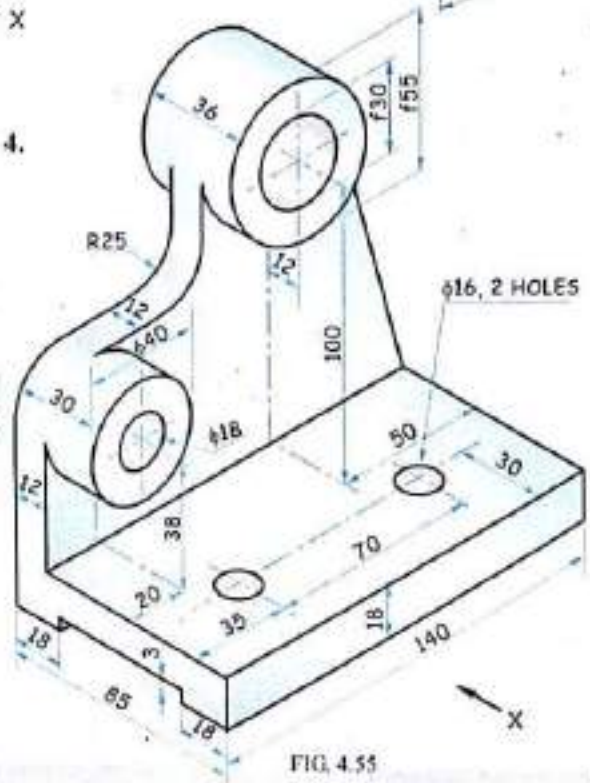

FIG. 4.55

Note : *Refer Appendix A for solutions.*

Scanned by CamScanner

5 SECTIONAL ORTHOGRAPHIC PROJECTIONS

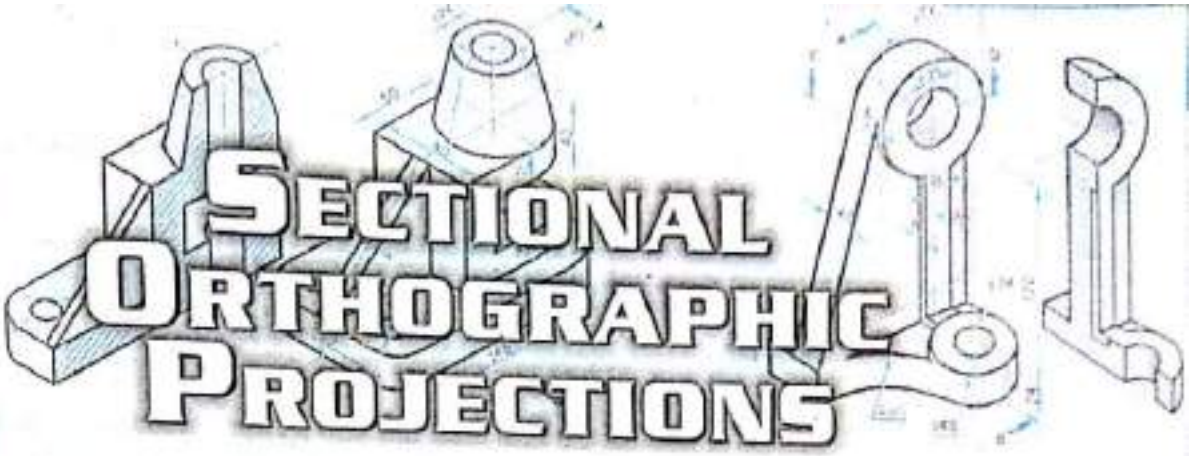

5.1 Introduction

The interior parts of hollow objects which are hidden from view, can only be presented by the dotted lines or hidden lines. If an object is simple in its interior construction, then there are a few hidden lines on the drawing, but when these hidden lines are large in number, the drawing is difficult to interpret. To overcome this difficulty, complicated objects are assumed to be cut by an imaginary plane.

A sectional view is a view seen when a position of an object nearest to the observer is imagined to be removed by means of cutting plane, so the observer can see the inner portion clearly.

In sectional orthographic projection, the portion of an object which is cut, is hatched by a thin line evenly placed. Generally, the hatching lines or section lines are drawn inclined to XY line at 45°. As per the cutting plane position when a section is assumed in one view, it does not affect the other views of an object. The other views are drawn by the usual orthographic projection assuming the entire object exist as a whole.

Points to be Followed While Drawing Section Lines

(i) Visible lines contained in the cutting plane and behind the section are shown.

(ii) Invisible lines behind the section are usually omitted.

(iii) Only the parts actually cut by the section plane are cross hatched with a thin continuous line drawn at an angle of 45° to the major outline of the object.

(iv) The cutting plane line shown in the view is a thick long chain at the ends and thin long and short lines at the centre with an arrow head drawn at the ends, which indicates the direction of an observer.

Scanned by CamScanner

(v) For two adjacent parts to be shown in section, the section lines shown should be drawn in opposite direction to distinguish them.

(vi) For third part adjacent to the first two parts should be sectioned at 30° or 60° with XY line.

(vii) If a dimension is to be given in any sectional area, the required space should be kept blank from section line.

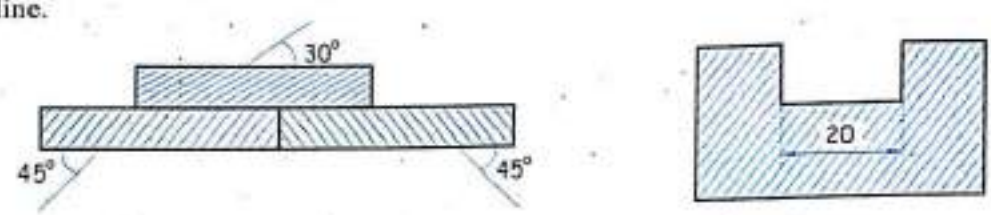

5.2 Types of Sectional View

1. Full Sectional View

If an object is cut entirely into two equal half portion by an imaginary cutting plane, which passes through the centre line, then the obtained sectional view is known as *full sectional view*. *Refer figure 5.1 (a), (b), (c).*

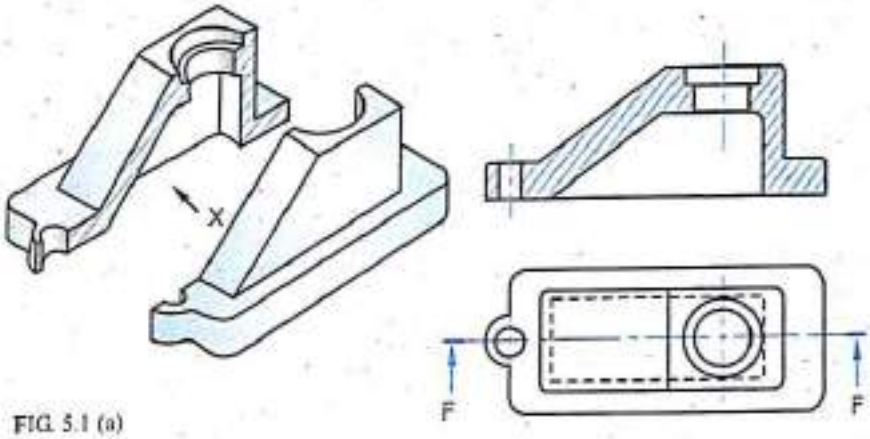

FIG. 5.1 (a)

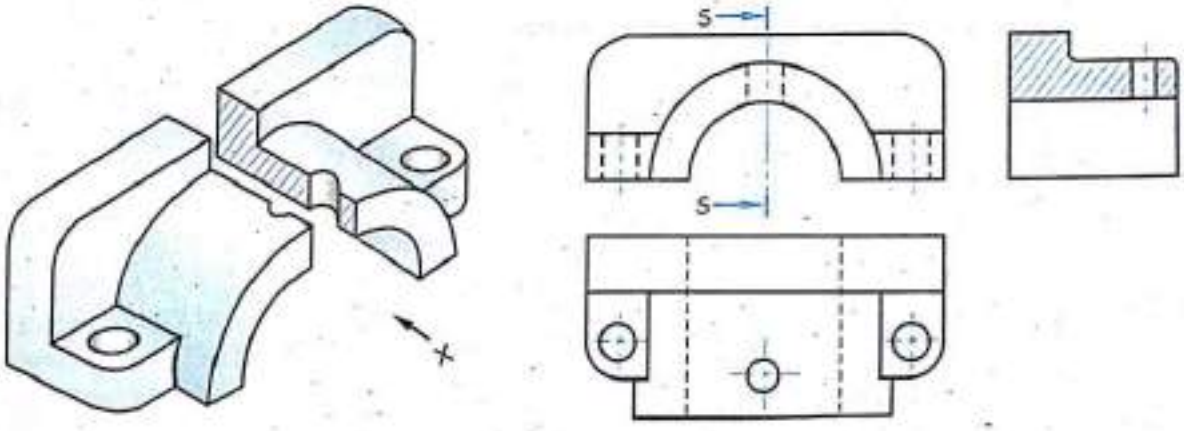

FIG. 5.1 (b)

Scanned by CamScanner

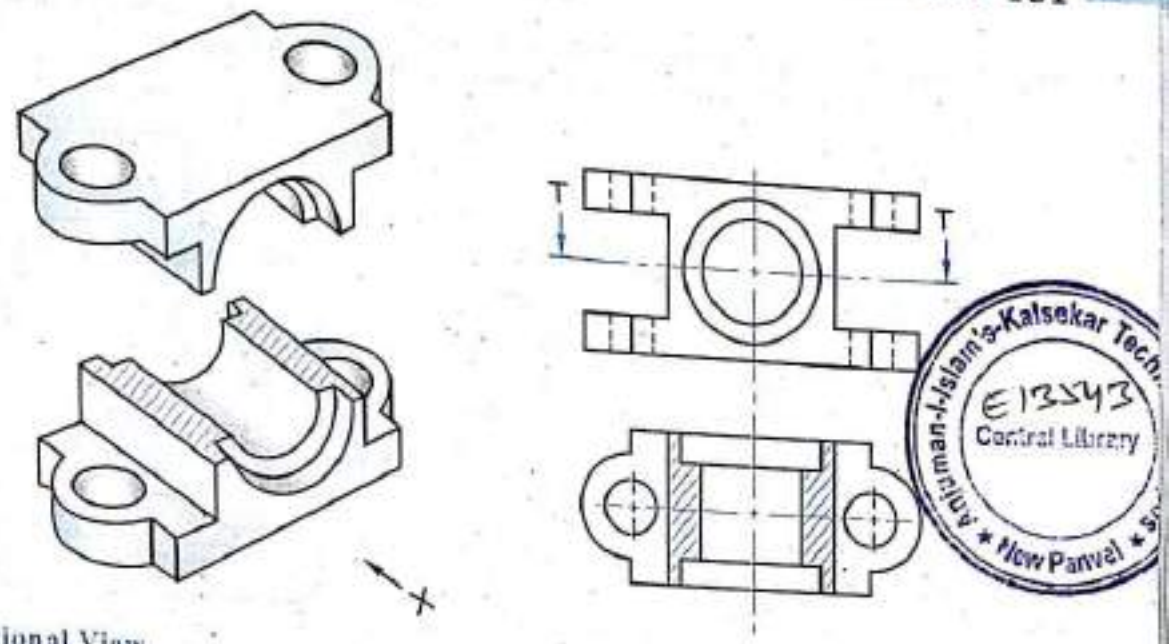

Anjuman-I-Islam's Kalsekar Tech.
E13543
Central Library
New Panvel

FIG. 5.1 (c)

2. Half Sectional View

If the projection is a symmetric figure, the combination of an exterior view and a sectional view is also permitted. If two imaginary cutting planes perpendicular to each other are so placed to cut the object on the line of symmetry to get half external view and second half sectional view, then the obtained sectional view is known as *half sectional view*. *Refer figure 5.2.*

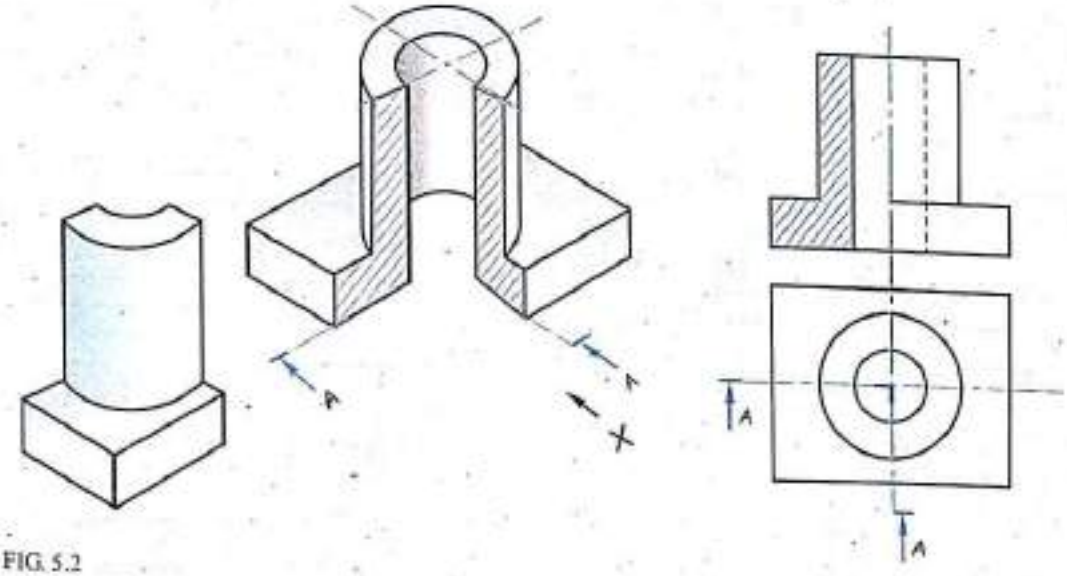

FIG. 5.2

3. Off-set Section

When the cutting plane is not passing through the axis of symmetry of an object, then to include two or more axis of symmetry and to show maximum details, the cutting plane is off-setted. A zig-zag straight path of cutting plane is set as per suitability. *Refer figure 5.3.*

Scanned by CamScanner

When an off-set section is drawn, the edges of off-set section plane are not shown in the sectional view, but the position of off-set section is shown in the respective view represented by the cutting plane line.

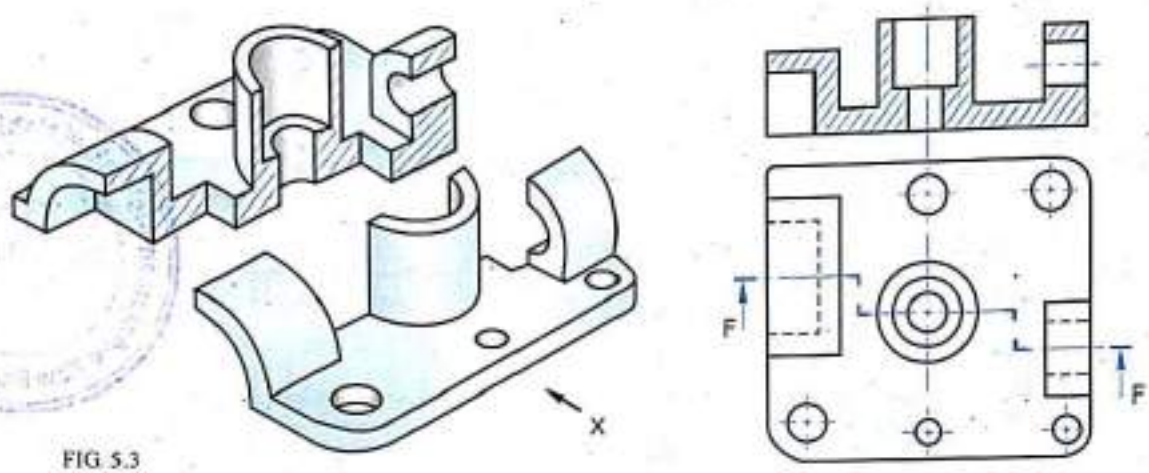

FIG 5.3

4. Revolved Section

In many cases, the cross section of some part of a structure or machine is necessary for the purpose of shape or size description. Frequently, the easiest way to obtain this without drawing an extra view is a *revolved section*. A revolved section is obtained by passing a cutting plane through a member perpendicular to one of the principal planes of projection and then revolving the cross section, thus obtained about its own axis of symmetry centre, it is parallel to the plane of projection. In this position, the section will show the true shape directly on that view. This method is particularly useful for structural shapes, e.g. spokes of wheels, arms, handles etc. *Refer figure 5.4.*

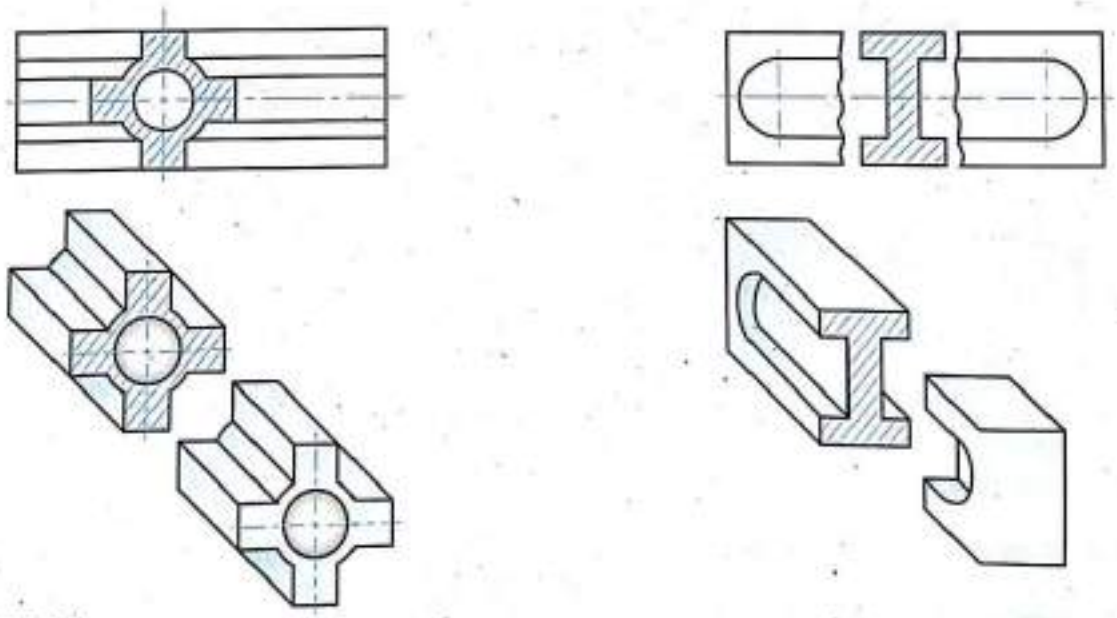

FIG 5.4

Scanned by CamScanner

5. Removed Section

The removed section is drawn outside the view to make it more clear. It is almost similar to revolved section and is taken around the extension of the cutting plane line. *Refer figure 5.5.*

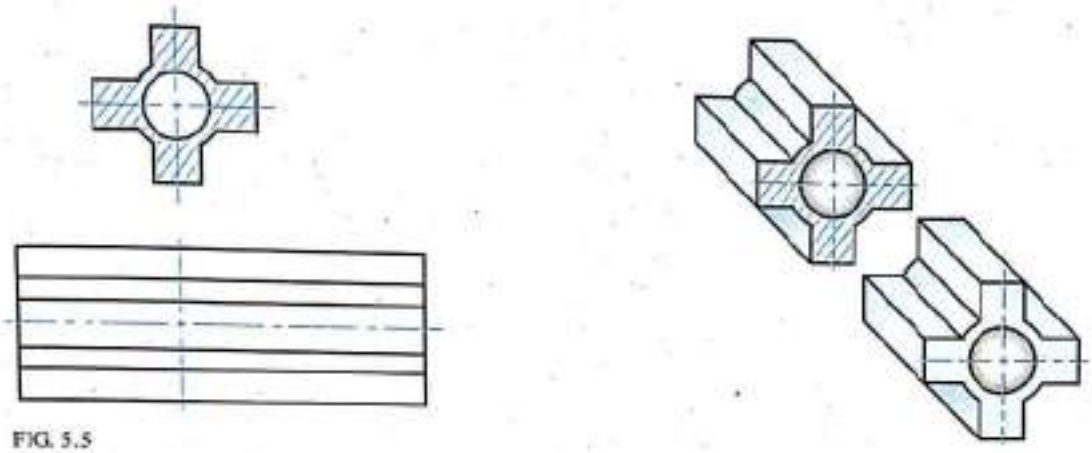

FIG. 5.5

6. Broken Out Section

The interior detail is shown by break out of a small portion of the outer point covering just the particular area. The break is outlined with a thin irregular wavy freehand lines. This line must not coincide with any contour of the view. *Refer figure 5.6.*

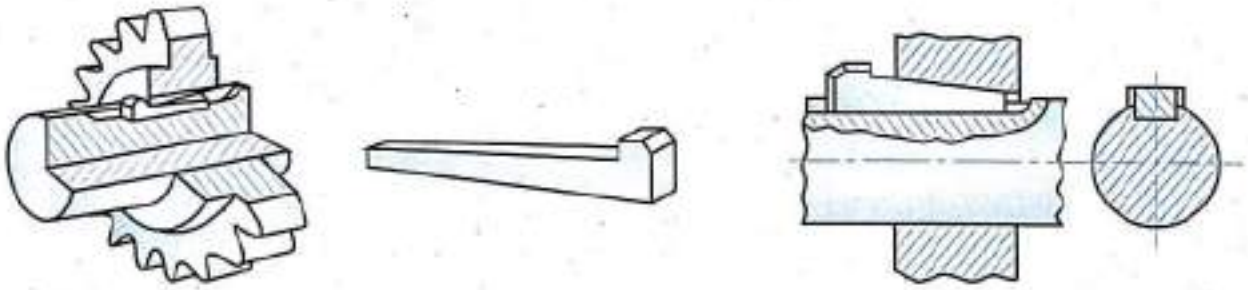

FIG. 5.6

7. Rib in Section

A rib (web) is a thin supporting part of an object, which is used for adding strength to the object. When the cutting plane passes through the rib parallel to its larger dimension, the usual practice is not to draw hatching lines or section lines on the rib portion. On other hand when the cutting plane passes through the rib perpendicular to its larger dimension, the rib is shown with hatching lines. *Refer figures 5.7(i), (ii), (iii) and (iv).*

Scanned by CamScanner

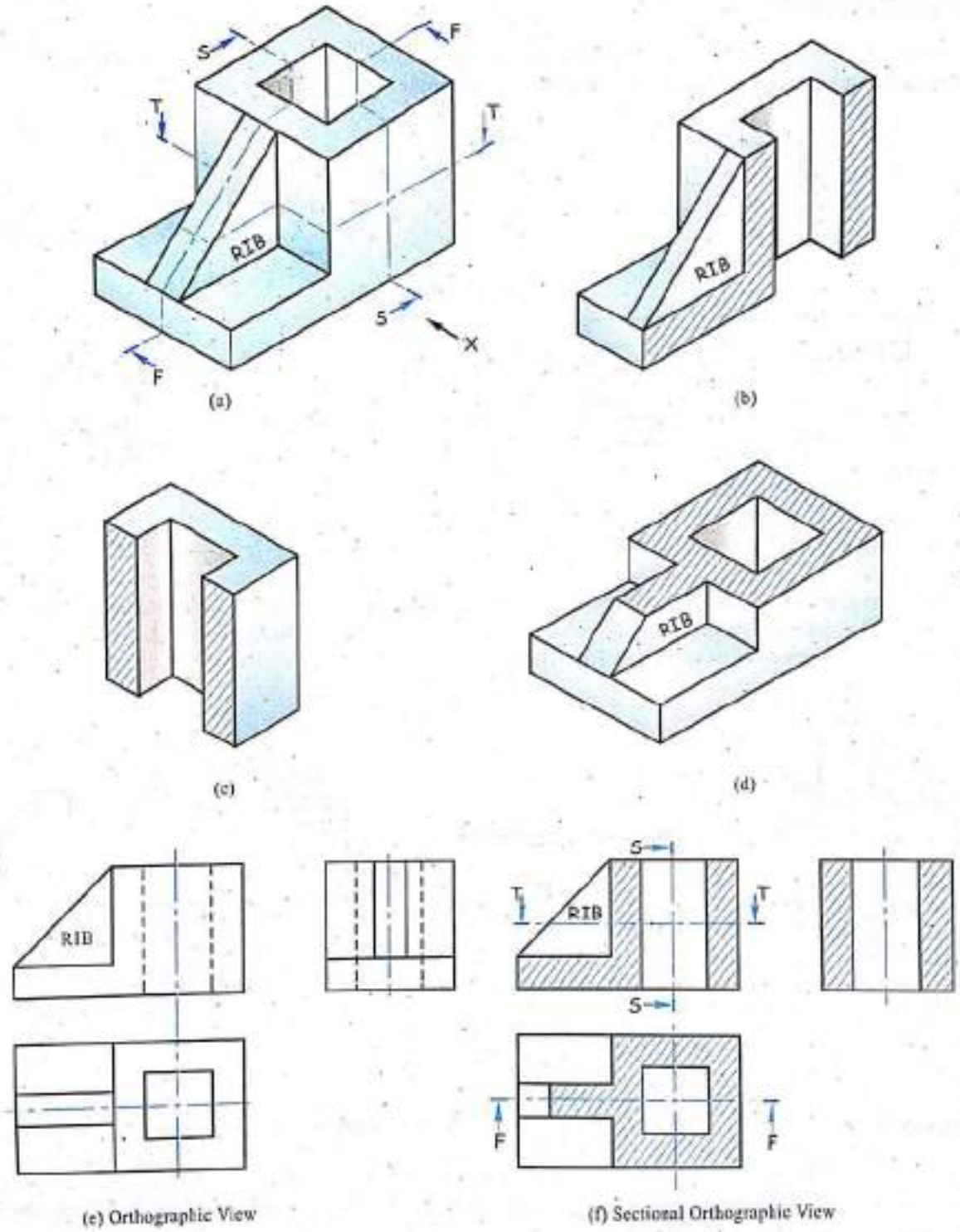

FIG. 5.7 (i)

Scanned by CamScanner

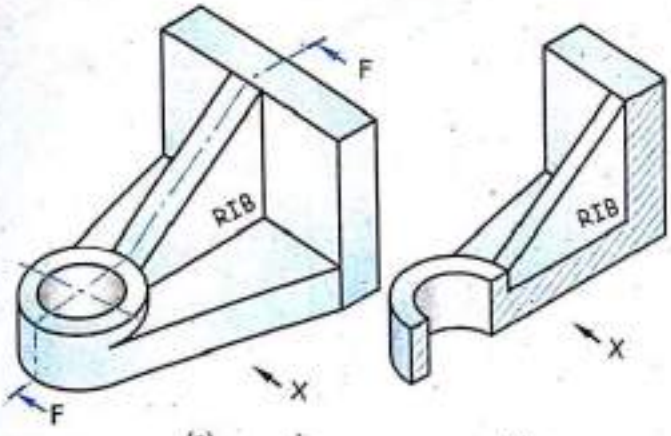

(a) (b)

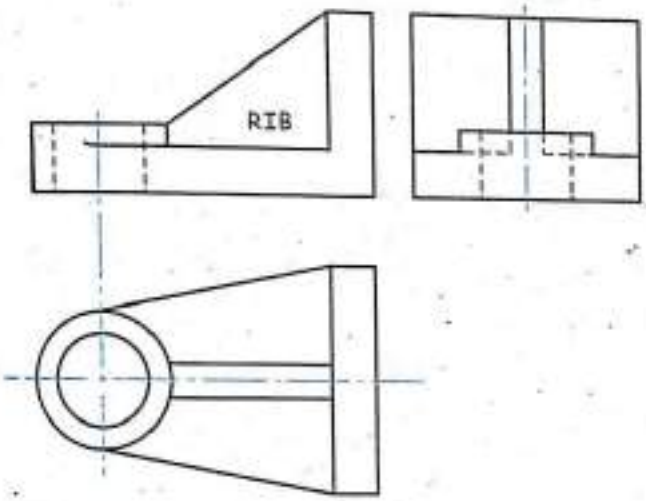

(c) Orthographic View

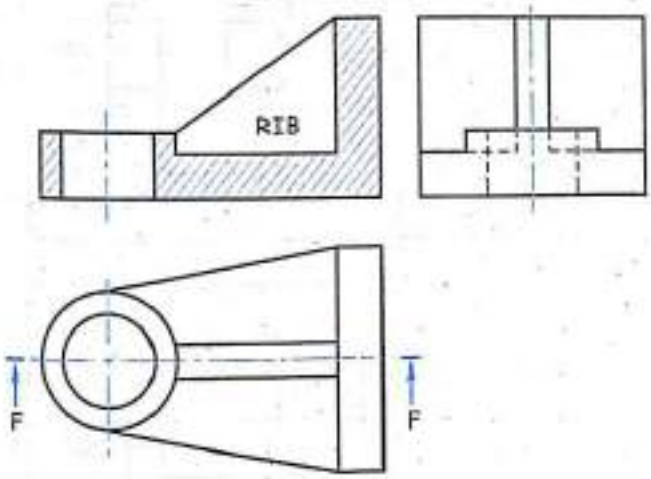

(d) Sectional Orthographic View

FIG. 5.7 (ii)

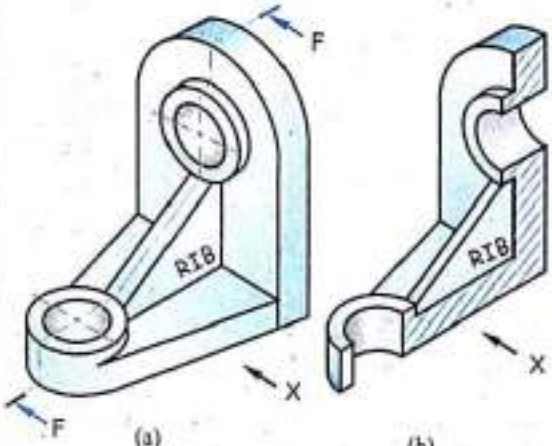

(a) (b)

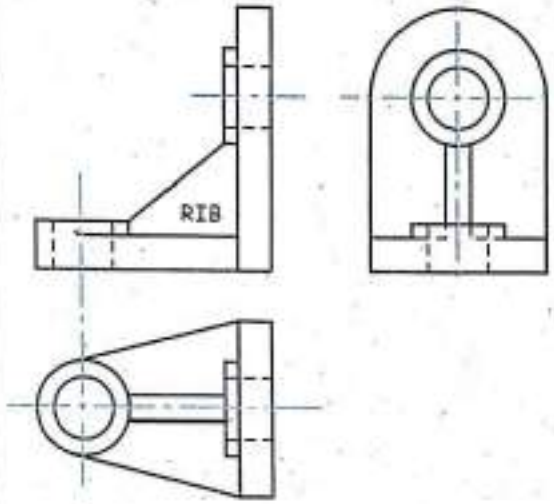

(c) Orthographic View

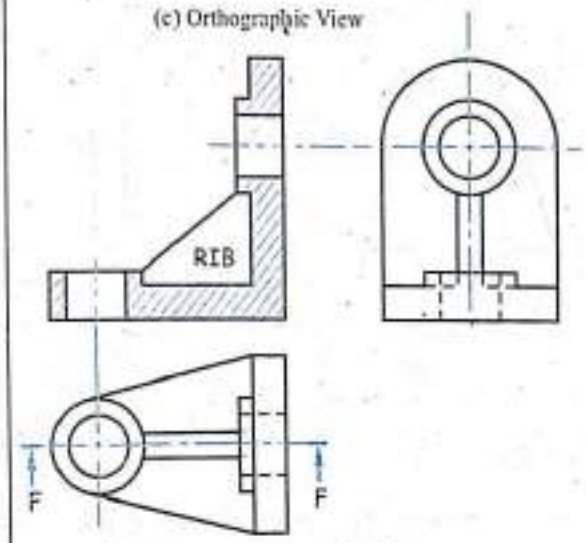

(d) Sectional Orthographic View

FIG. 5.7 (iii)

Scanned by CamScanner

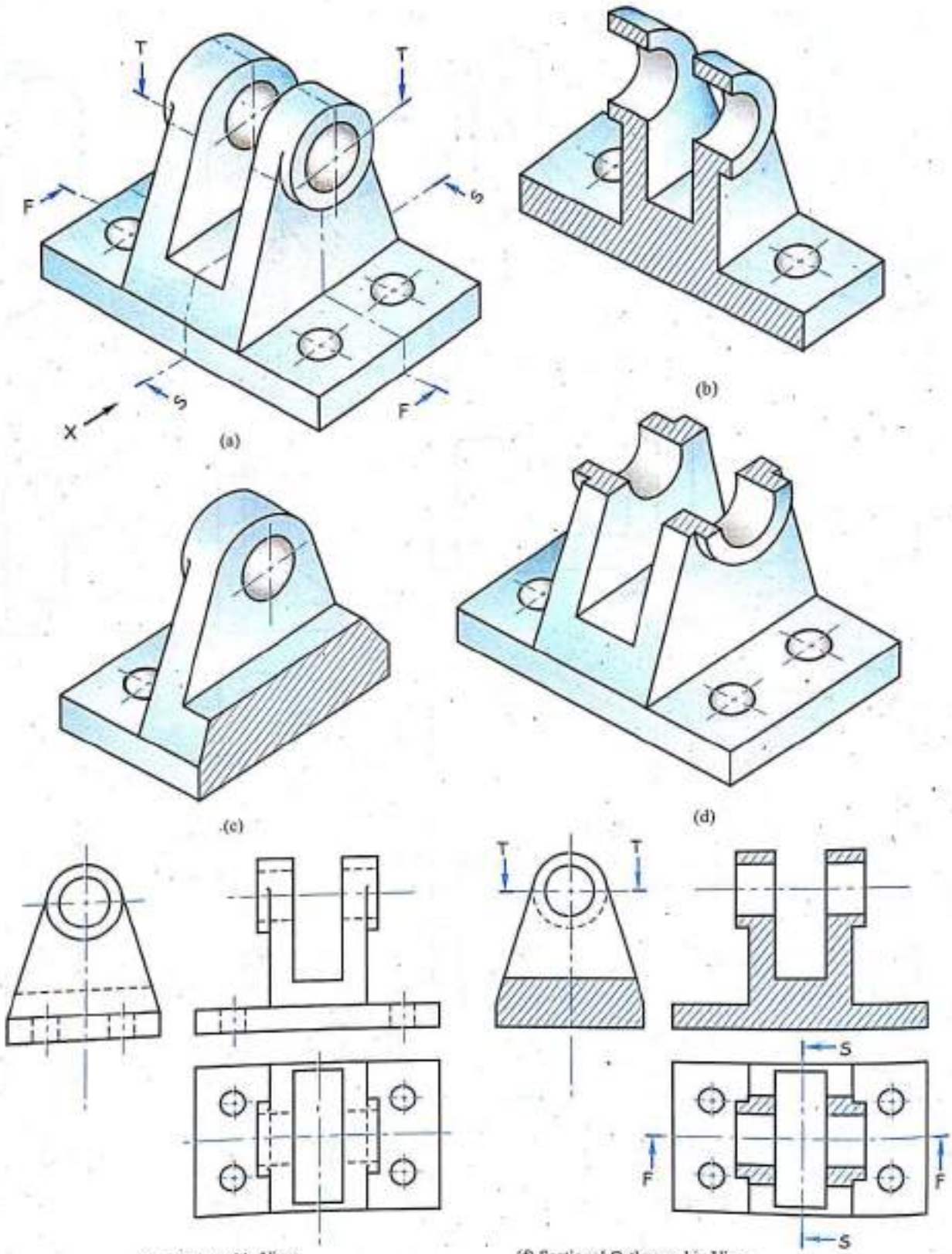

FIG. 5.7 (iv) (e) Orthographic View (f) Sectional Orthographic View

Scanned by CamScanner

5.3 Different Types of Holes

1. Through Hole

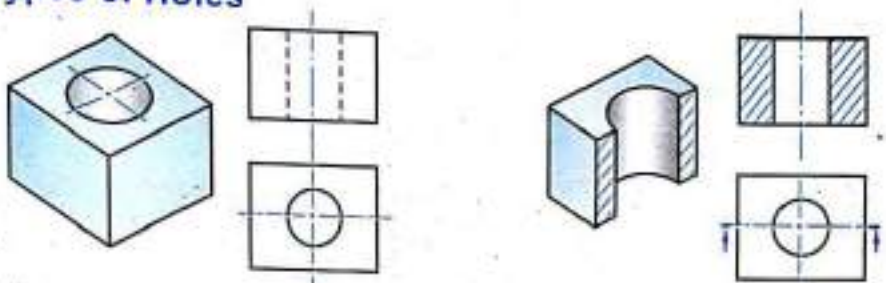

FIG. 5.8

2. Blind Drilled Hole

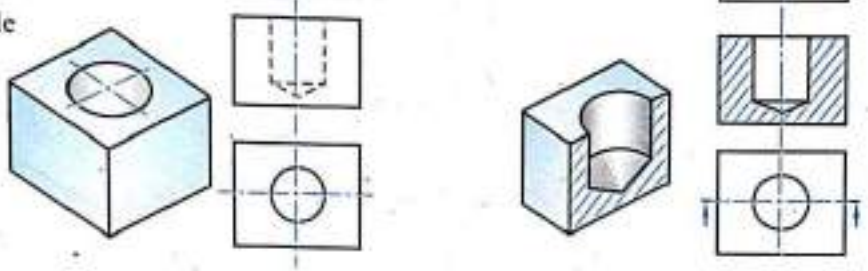

FIG. 5.9

3. Spot Face Hole

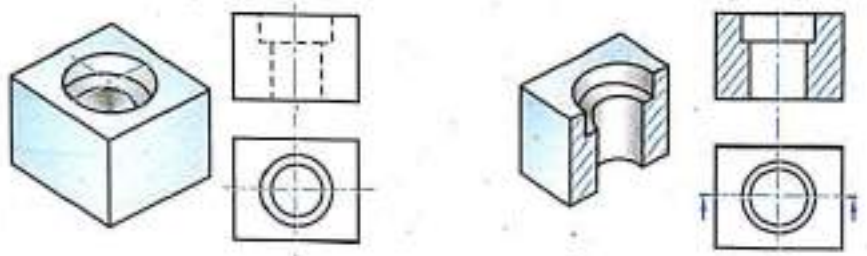

FIG. 5.10

4. Tapped Hole

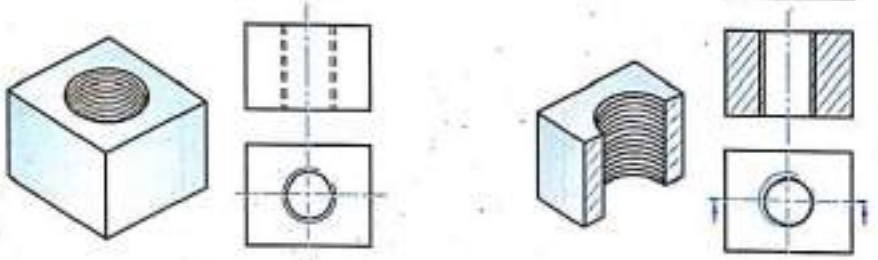

FIG. 5.11

5. Counter Sunk Hole

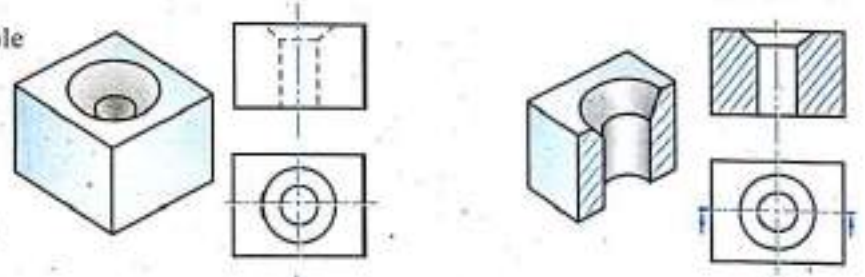

FIG. 5.12

6. Step Hole

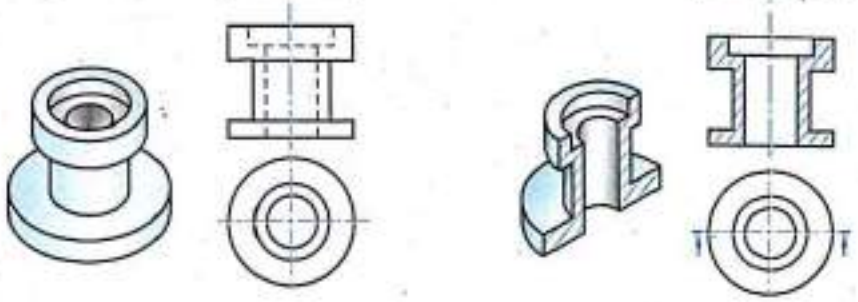

FIG. 5.13

Scanned by CamScanner

5.4 Solved Problems

Note : *In problems 1 to 10 an orthographic view is also shown along with sectional orthographic view for better understanding.*

Problem 1

Figure 5.14 (a) shows pictorial view of an object. Using first angle method of projection draw:

(a) Sectional Front view, section along *A-A*.

(b) Top view.

(c) Side view from left side.

(d) Give dimensions.

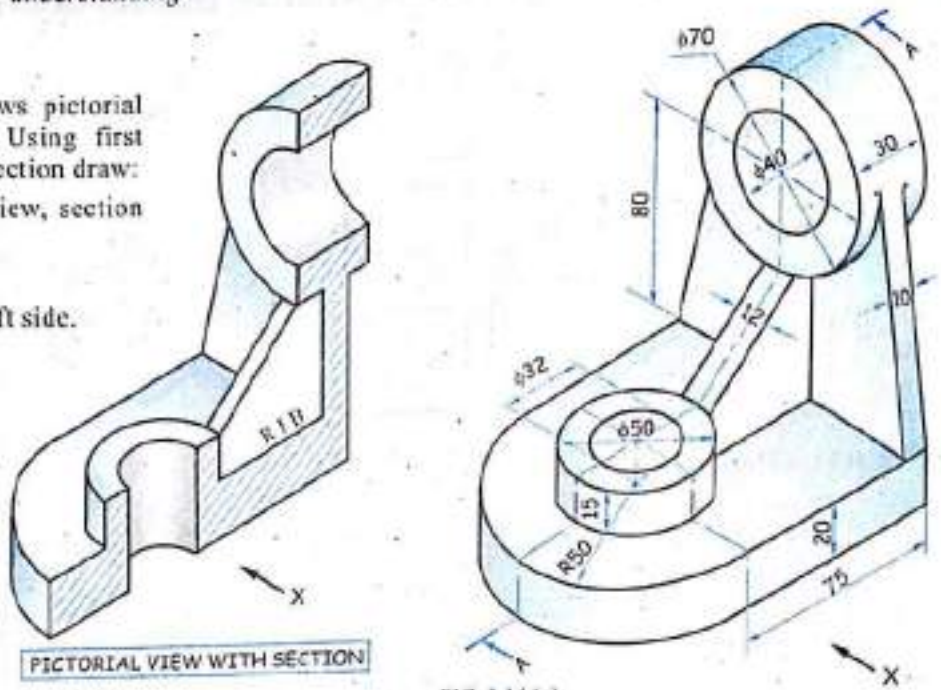

FIG. 5.14 (a)

Solution : *Refer figure 5.14 (b).*

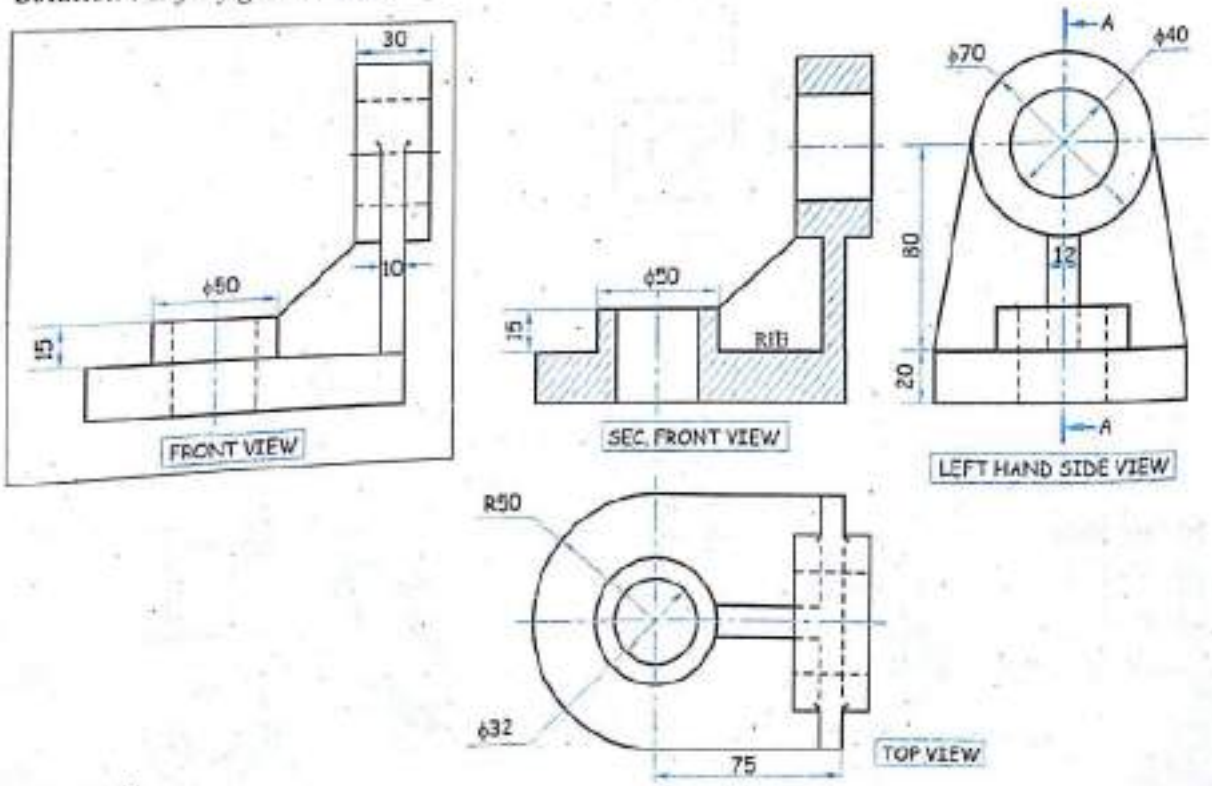

FIG.5.14 (b)

Scanned by CamScanner

Problem 2

Figure 5.15 (a) shows pictorial view of an object. Using first angle method of projection, draw:

(a) Sectional front view, section on *A-A*.

(b) Top view.

(c) Side vew from right.

(d) Give important dimensions.

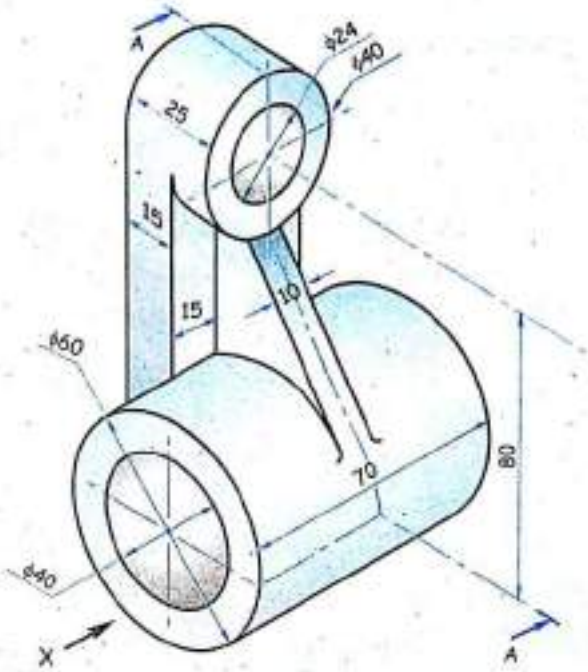

FIG. 5.15 (a)

Solution

Refer figure 5.15 (b).

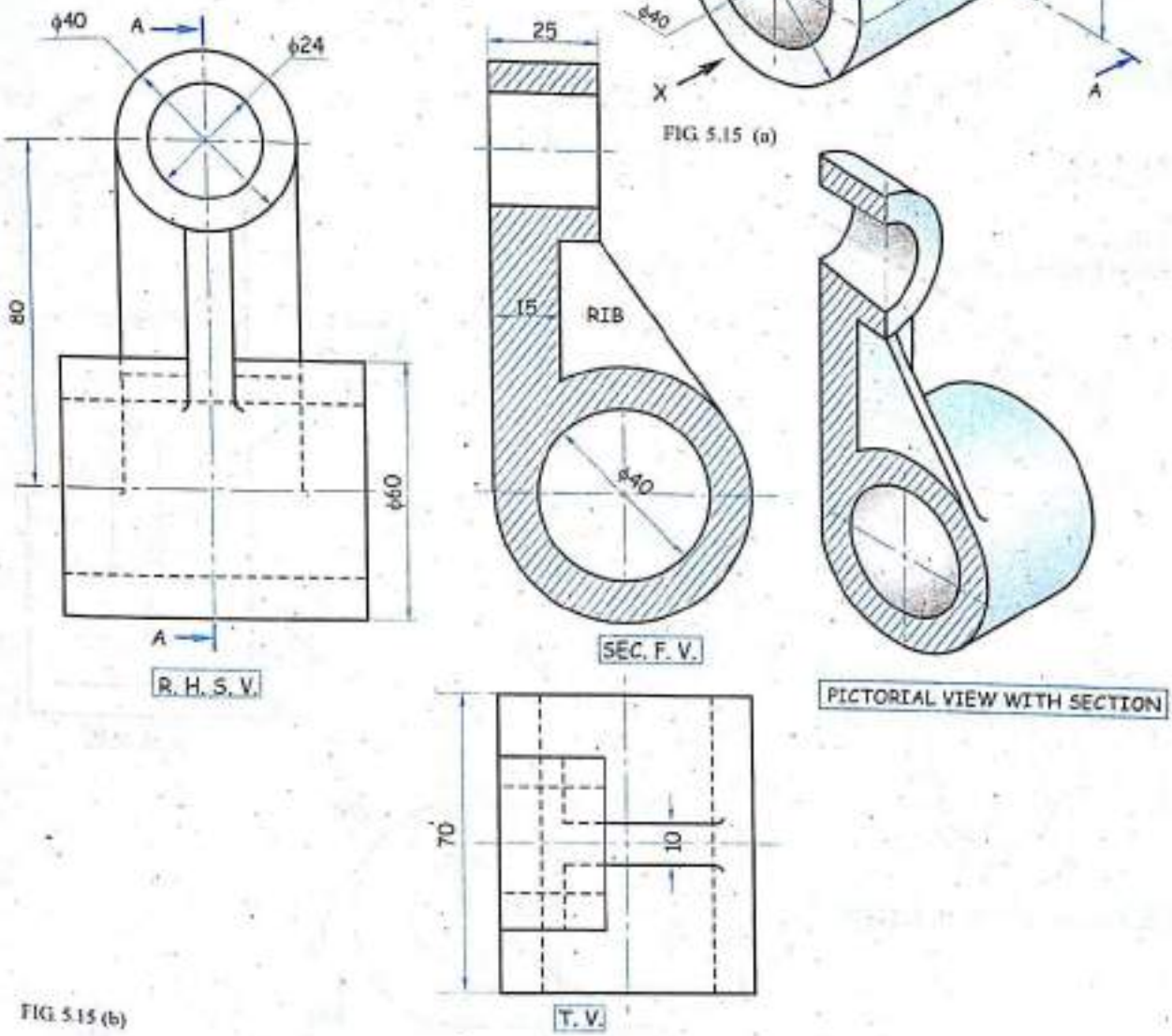

FIG. 5.15 (b)

Scanned by CamScanner

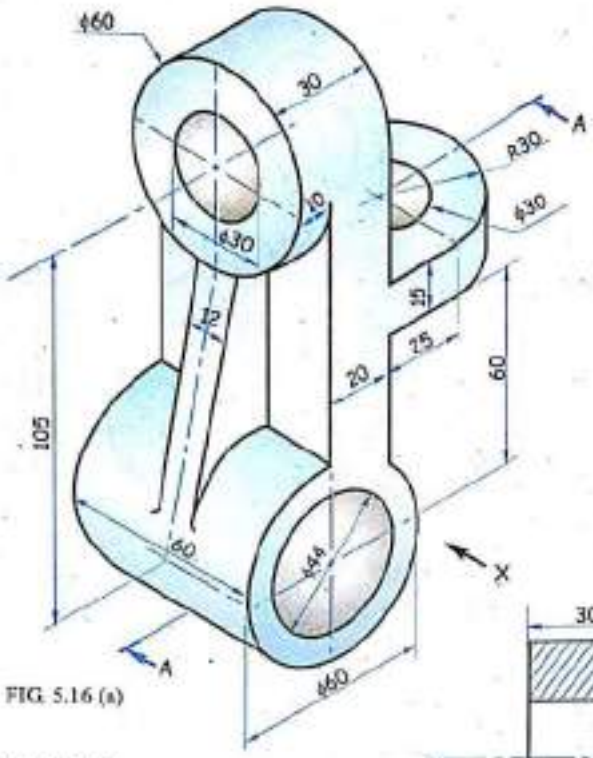

FIG. 5.16 (a)

Problem 3

Figure 5.16 (a) shows pictorial view of an object. Using first angle method of projection, draw:

(a) Sectional front view, from '*X*' direction section along *A - A*.

(b) Top view.

(c) Side view from left.

Solution

Refer figure 5.16 (b).

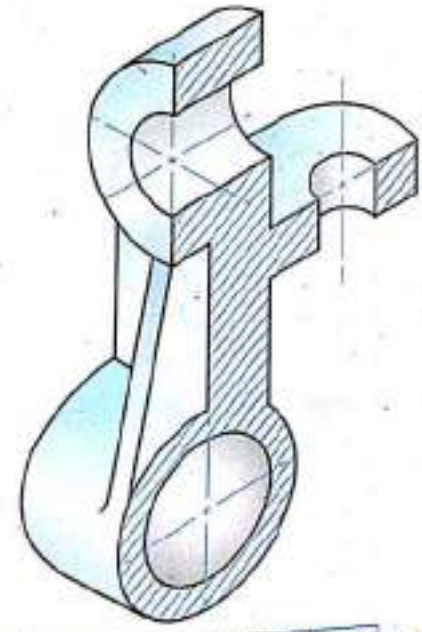

PICTORIAL VIEW WITH SECTION

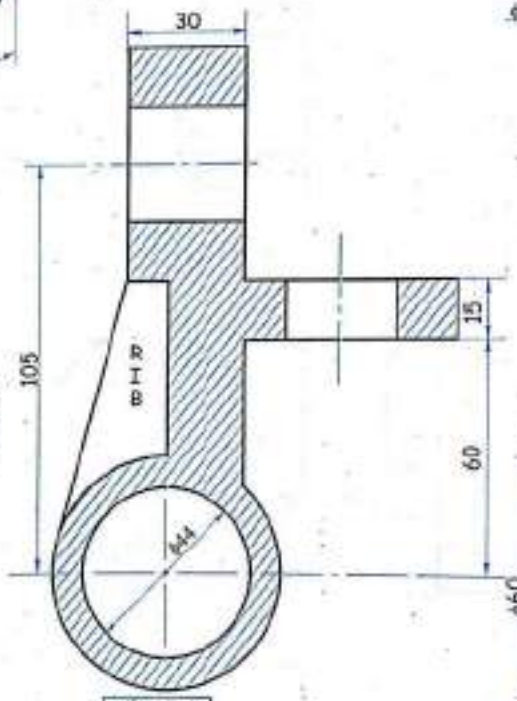

SEC. F. V.

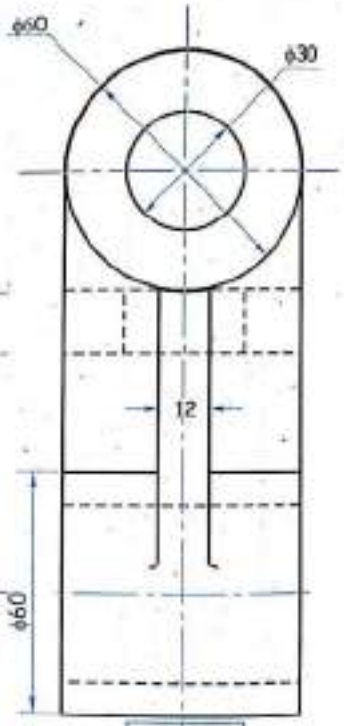

L. H. S. V.

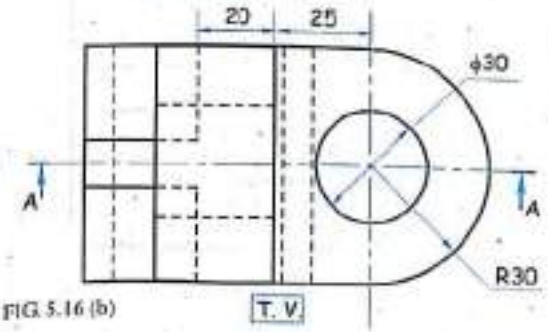

FIG. 5.16 (b)

T. V.

Scanned by CamScanner

Problem 4

Figure 5.17 (a) shows pictorial view of an object. Using first angle method of projection, draw:

(a) Front view.

(b) Top view.

(c) Sectional side view from section on *A-A*.

(d) Give important dimensions.

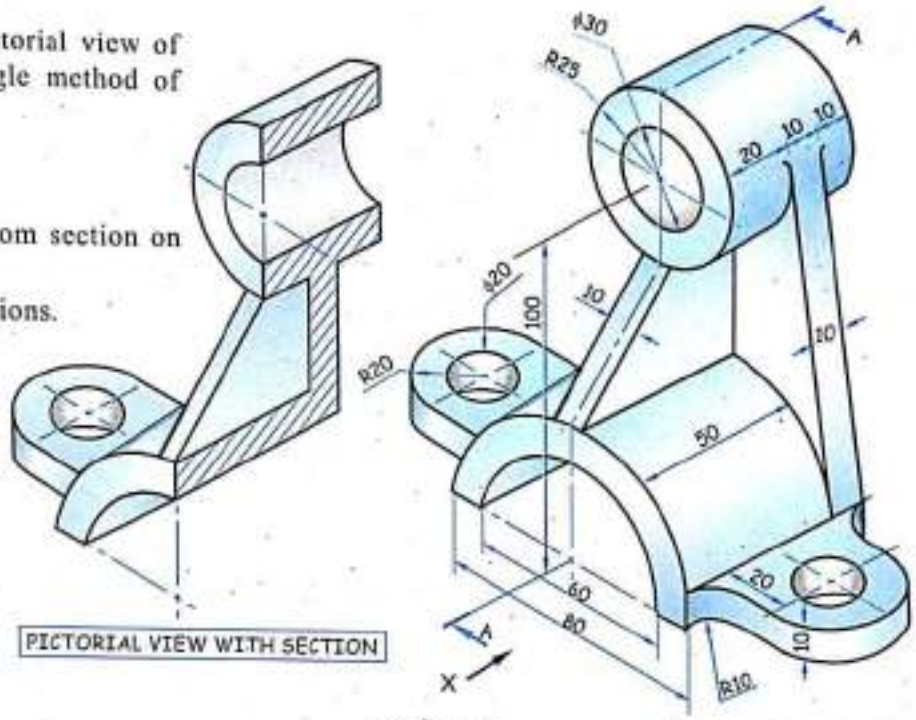

FIG. 5.17 (a)

Solution

Refer figure 5.17 (b).

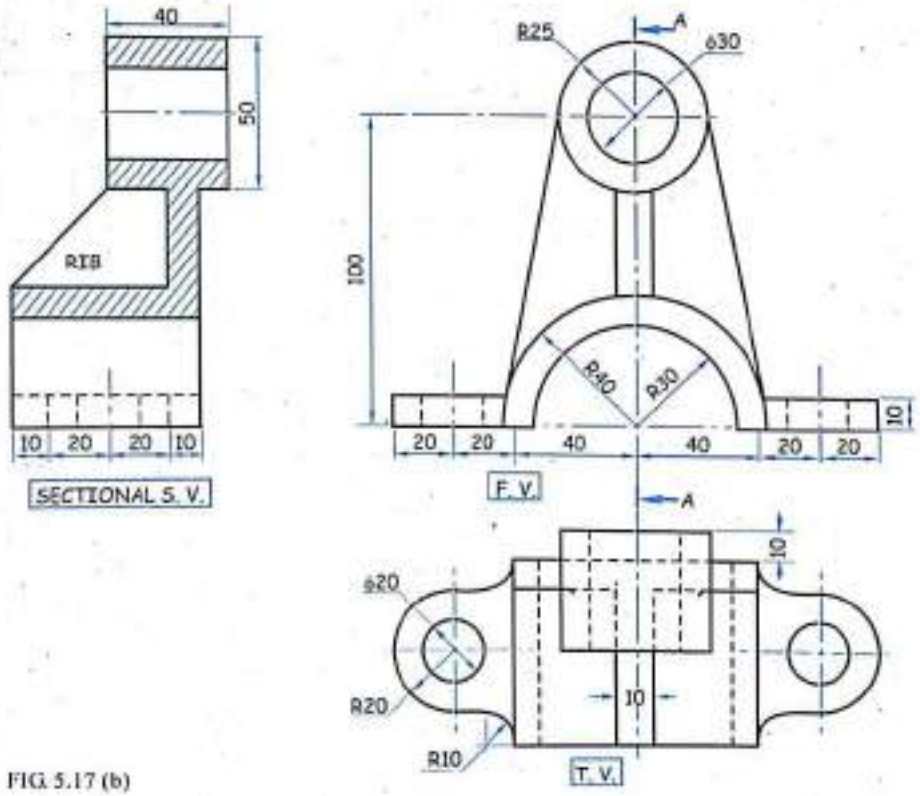

FIG. 5.17 (b)

Scanned by CamScanner

Problem 5

Figure 5.18 (a) shows pictorial view of an object. Using first angle method of projection, draw:

(a) Sectional Elevation along section *A-A*.

(b) Plan.

(c) End view from left side

(d) Show 10 to12 important dimensions.

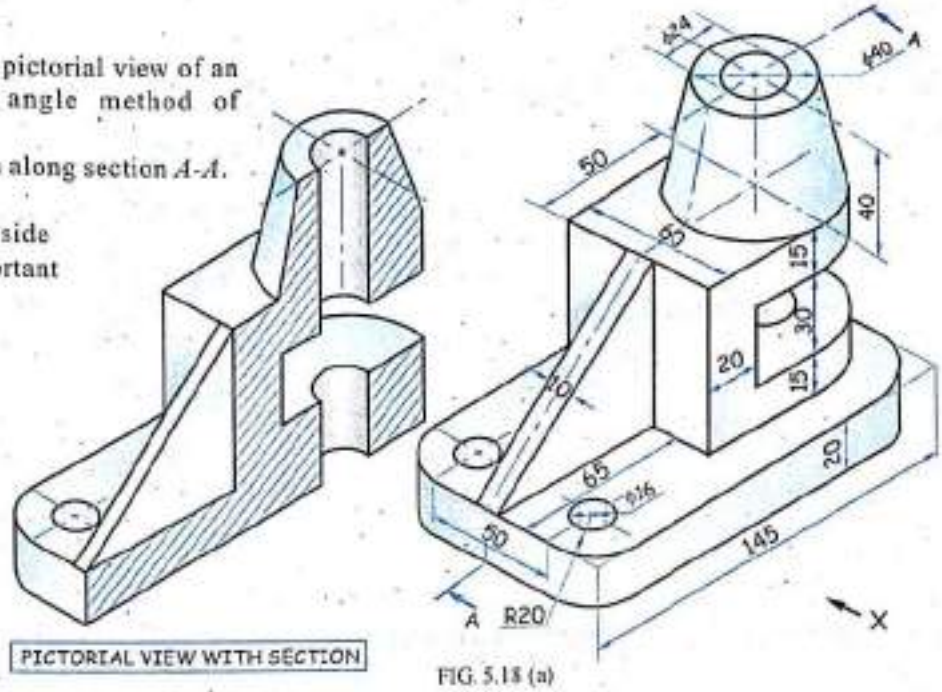

FIG. 5.18 (a)

Solution

Refer figure 5.18 (b).

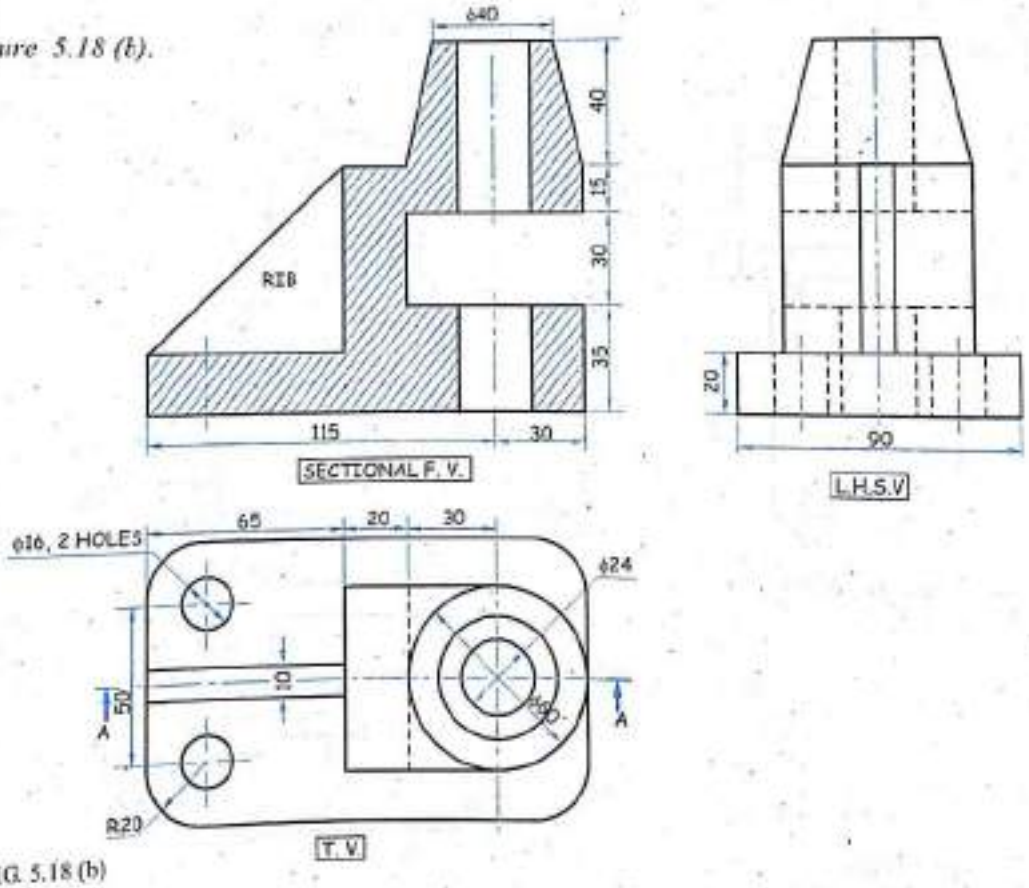

FIG. 5.18 (b)

Scanned by CamScanner

Problem 6

Figure 5.19 (a) shows pictorial view of an object. Draw the following views using first angle method of projection.

(a) Sectional Front view from *X* direction section along *A-A*.

(b) Side view from left.

(c) Top view.

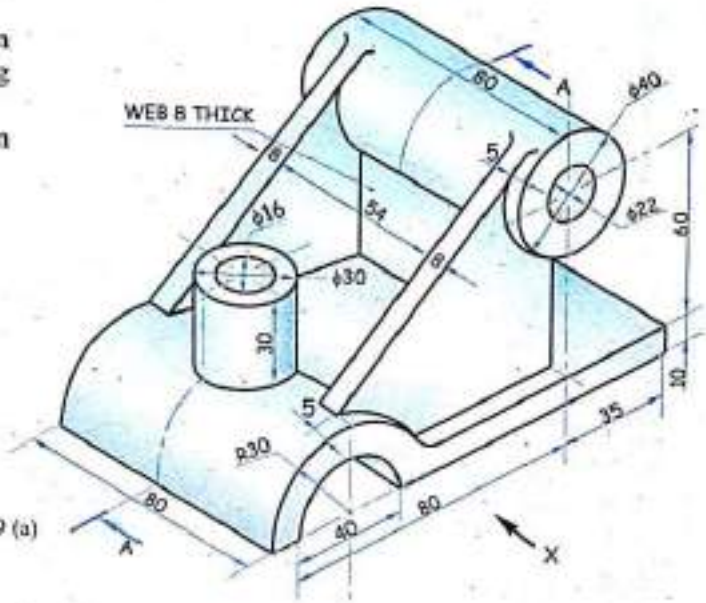

FIG. 5.19 (a)

Solution

Refer figure 5.19 (b).

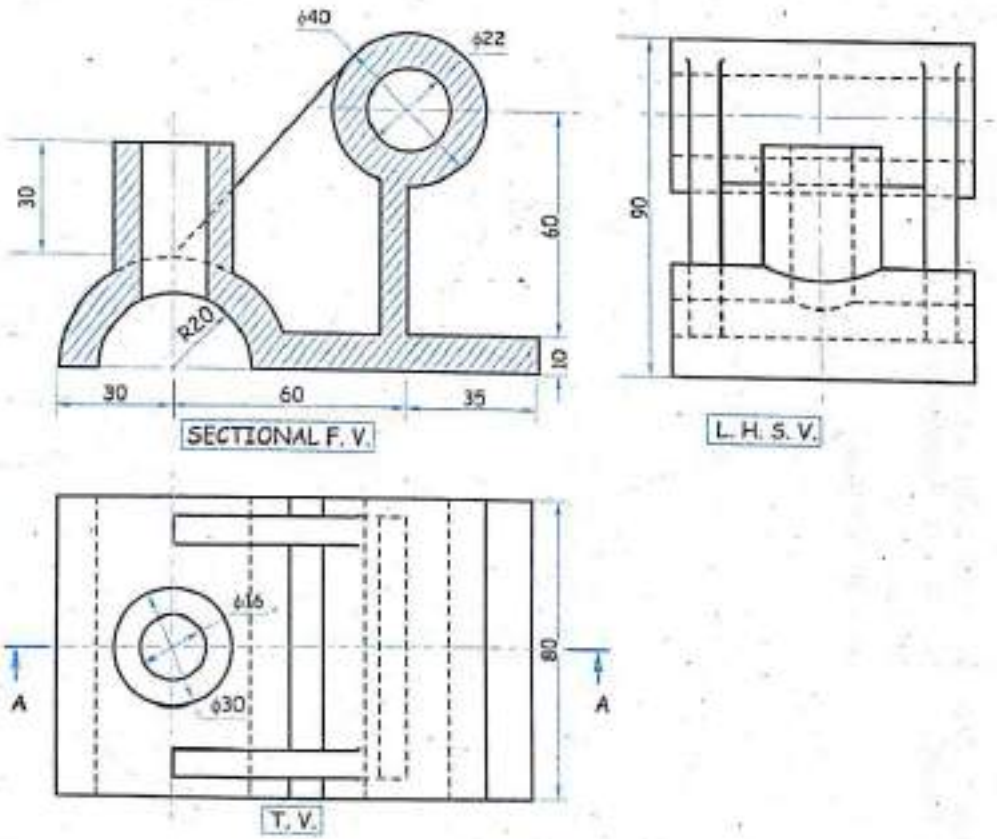

FIG. 5.19 (b)

Scanned by CamScanner

Problem 7

Figure 5.20 (a) shows a pictorial view of a C.I. Block. Draw to scale full size, the following views by using first angle method of projection :

(a) Sectional elevation along the direction of arrow *X* and the section along *A-A*.

(b) Plan.

(c) End view from left, along the direction of arrow *Y*. Dimension the views.

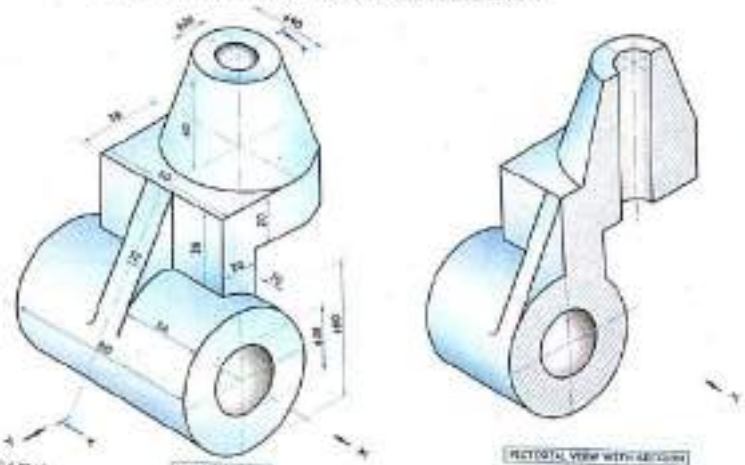

FIG. 5.20 (a)

Solution 7

Refer Figure 5.20 (b).

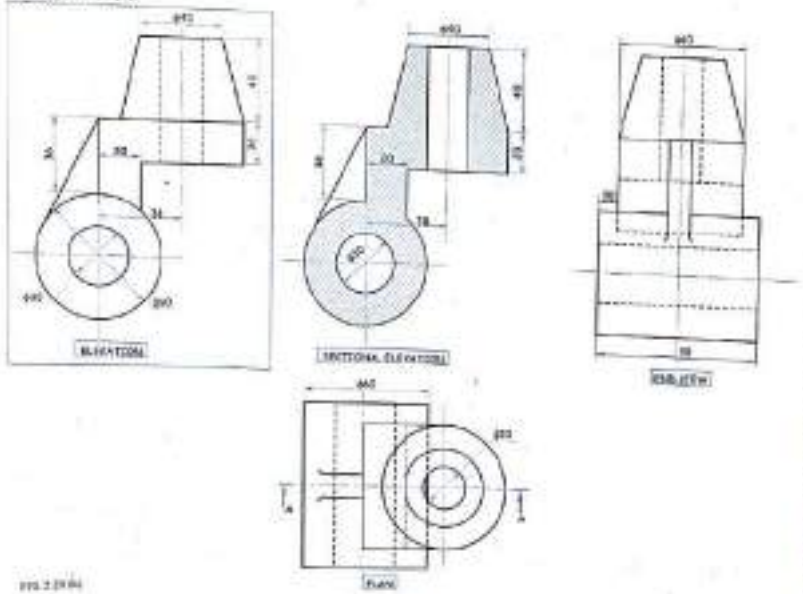

FIG. 5.20 (b)

Scanned by CamScanner

Problem 8

Figure 5.21 (a) shows a pictorial view of an object. Draw to scale full size, the following views by using first angle method of projection :

(a) Sectional front view along A-B.
(b) Left hand side view.
(c) Top view.

Dimension the views.

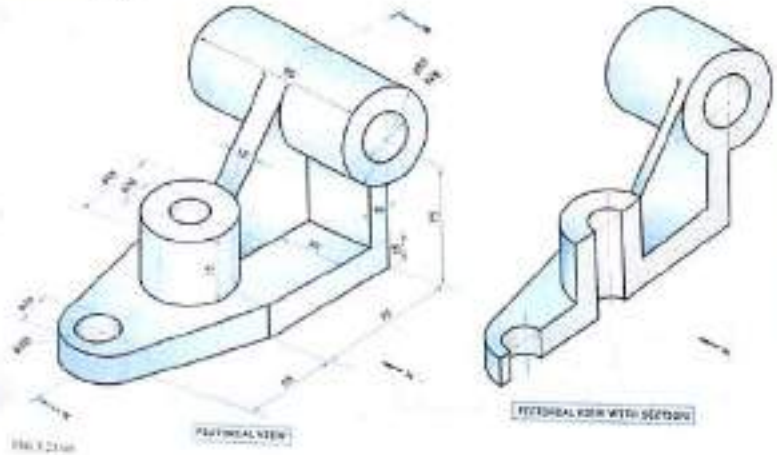

FIG 5.21 (a)

Solution 8

Refer figure 5.21 (b).

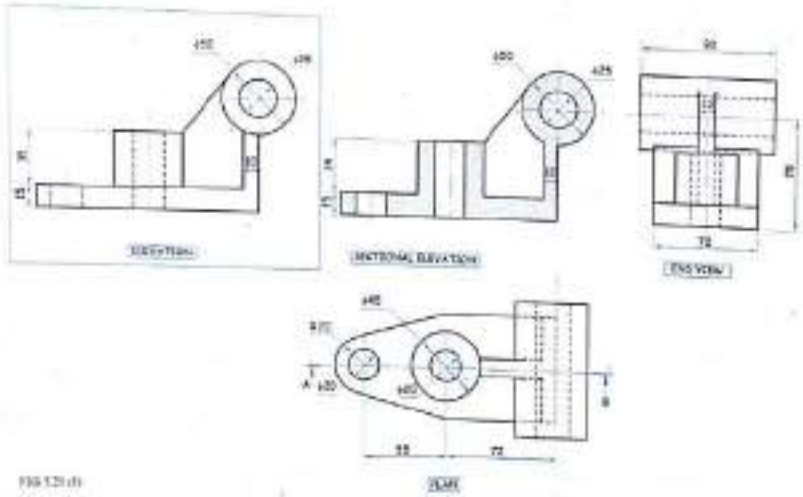

FIG 5.21 (b)

Scanned by CamScanner

Problem 9

Figure 5.22 (a) shows a pictorial view of a line Support Bracket. Draw to scale full size, the following views by using first angle method of projections :

(a) Sectional elevation along the direction of an arrow X and the section along j-k.

(b) Plan.

(c) End view along the direction of arrow E.

Give important dimensions.

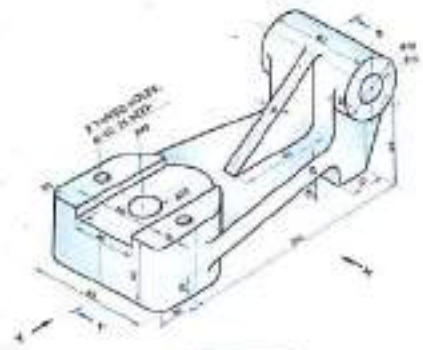

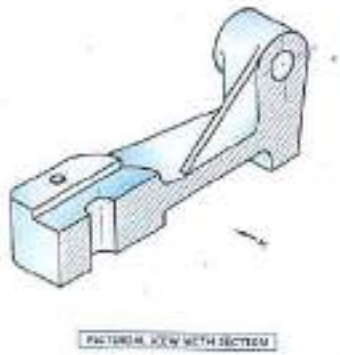

FIG. 5.22 (a)

Solution 9

Refer figure 5.22 (b).

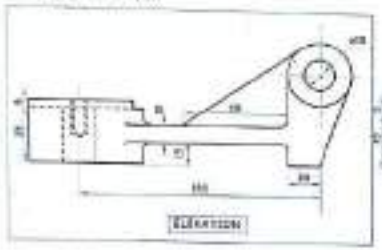

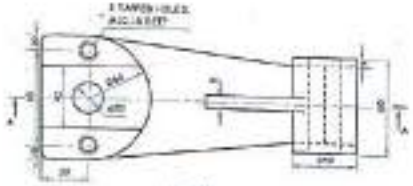

FIG. 5.22 (b)

Scanned by CamScanner

Problem 16

Figure 5.23 (a) shows a pictorial view of a Bracket. Draw to full scale, the following views by using first angle method of projection :

(a) Sectional front view along A-B as seen in the direction of an arrow X

(b) Top view

(c) Sectional side view from the right with a section along C-D.

Dimension the views.

(Nov. '03, M.U.)

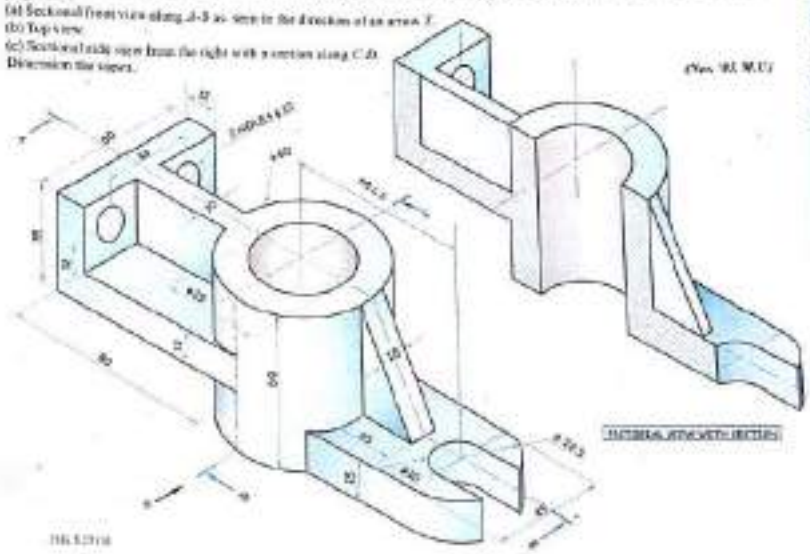

FIG. 5.23 (a)

Solution 16

Refer figure 5.23 (b)

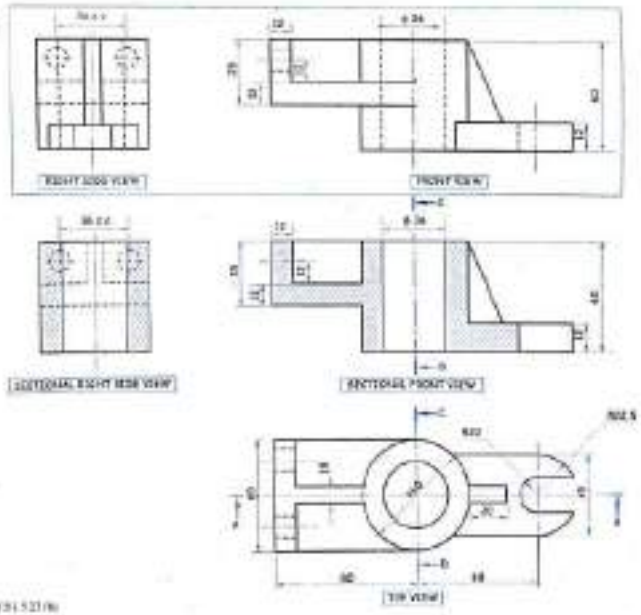

FIG. 5.23 (b)

Scanned by CamScanner

Problem 12

A pictorial view of a **Plum Bracket** is shown in figure 5.24 (a). Draw the following views by the first angle method of projection :

(a) Sectional front view along the direction of an arrow X and the section along A-A.

(b) Top view.

(c) Left side view.

Give all the dimensions.

(Dec. '92, M.U.)

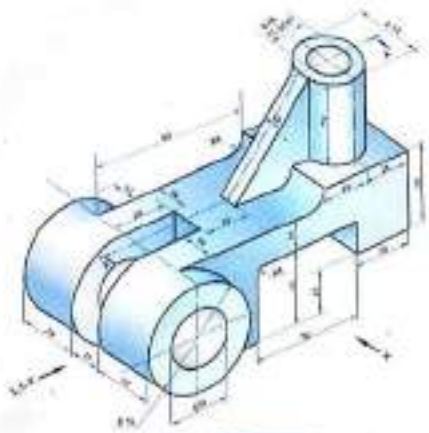

PICTORIAL VIEW

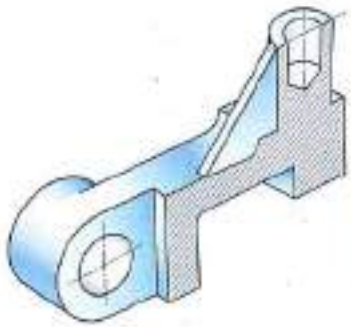

PICTORIAL VIEW WITH SECTION

FIG 5.24(a)

Solution 12

Refer figure 5.24 (b).

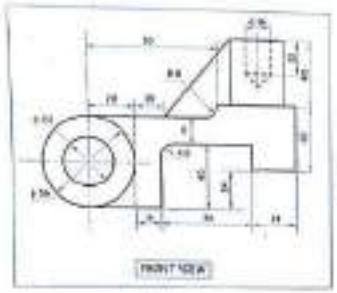

FRONT VIEW

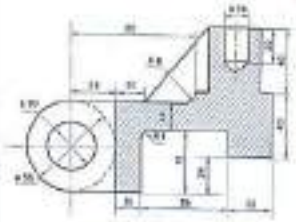

SECTIONAL FRONT VIEW

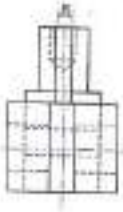

LEFT SIDE VIEW

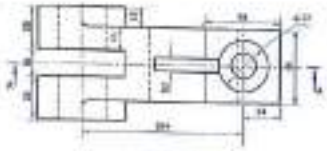

TOP VIEW

FIG 5.24(b)

Scanned by CamScanner

Problem 12

A pictorial view of a Clamp is shown in figure 5.23 (a). Draw to scale full size, the following views by using the first angle method of projection :

(a) A front view along the direction of arrow X.

(b) Top view.

(c) Half sectional side view (section along A-B)

Dimension the views.

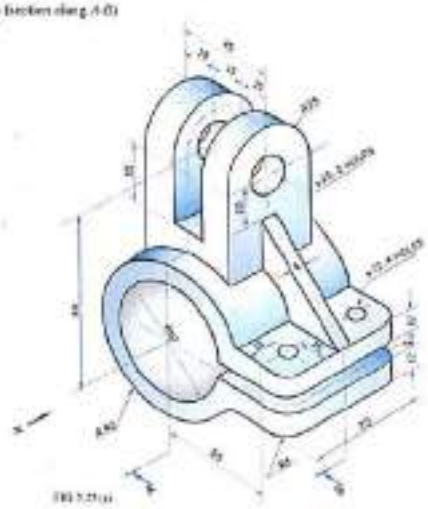

FIG 5.23 (a)

Solution 12

Refer figure 5.23 (b).

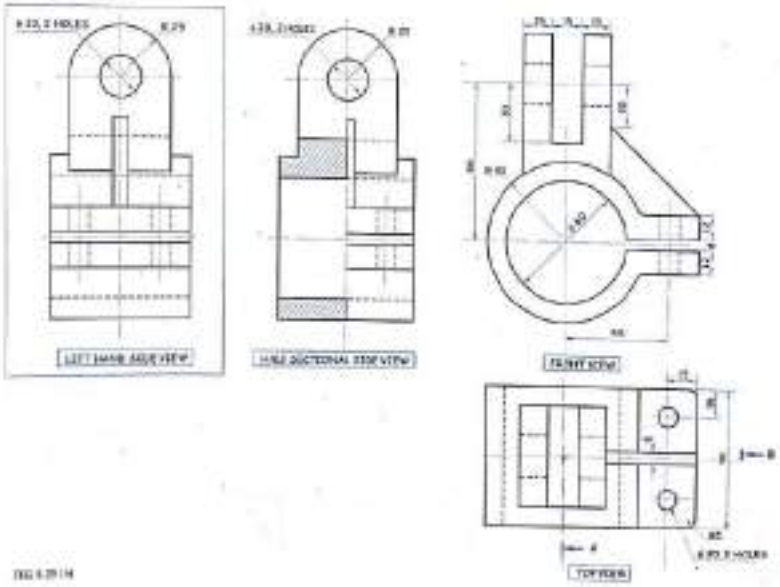

FIG 5.23 (b)

Scanned by CamScanner

Problem 13

A pictorial drawing of a Machine Part is shown in *figure 5.26 (a)*. Draw using full size scale, the following views of it. Use first angle method of projection and insert all the dimensions.

(a) Front view looking in the direction of an arrow *X*.

(b) Sectional top view on the section plane *A-B*.

(c) Sectional side view from right on the section plane *C-D*.

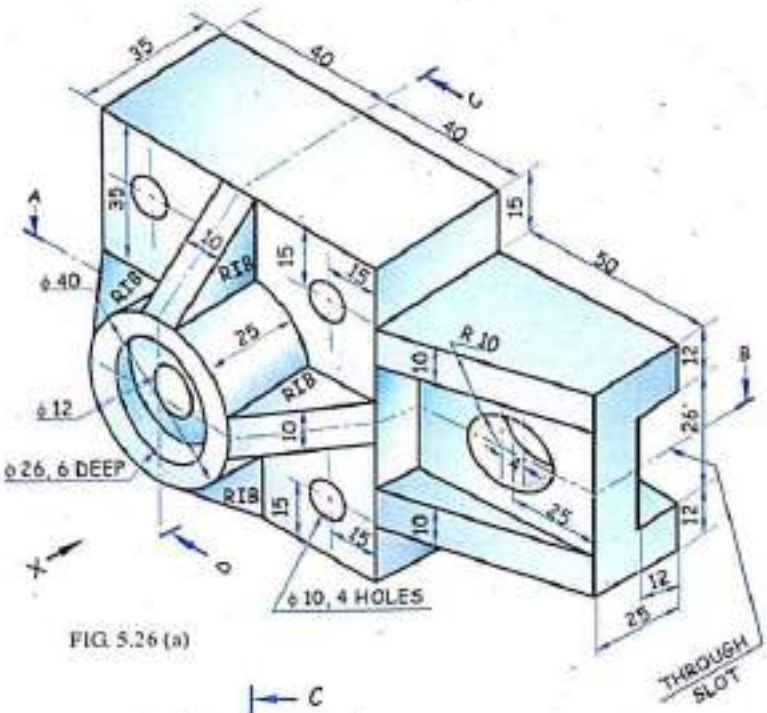

FIG. 5.26 (a)

Solution

Refer figure 5.26(b).

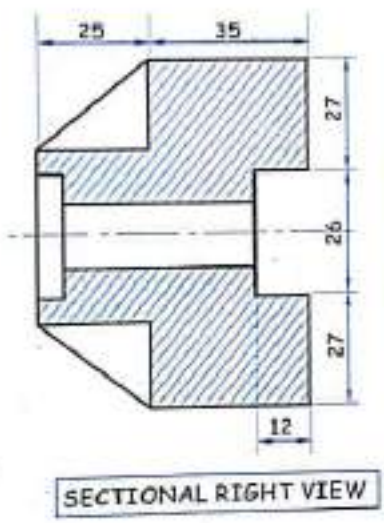

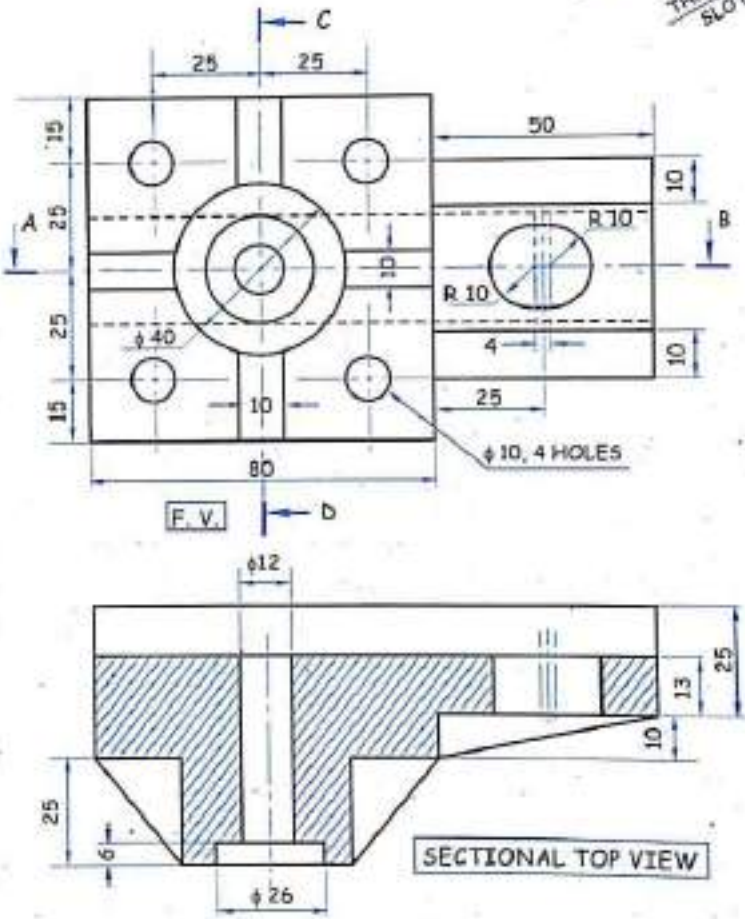

FIG. 5.26 (b)

Scanned by CamScanner

Problem 14

Figure 5.27 (a) shows pictorial view of an object, using first angle method of projection, draw : (a) Front view in the direction of *X*. (b) Top view.

(c) Sectional side view, section along *A-A*.

(d) Give important directions.

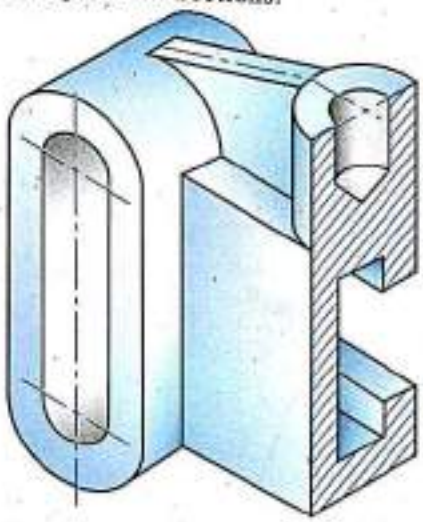

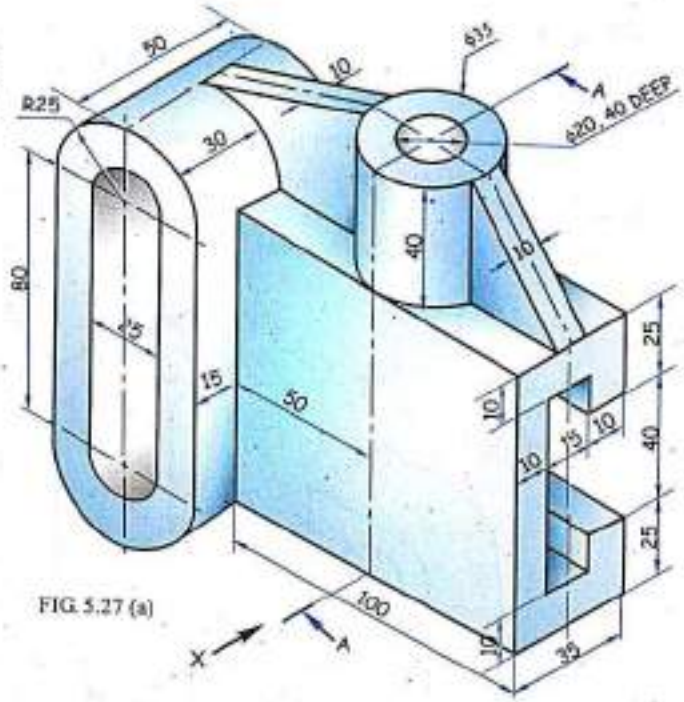

FIG. 5.27 (a)

Solution

Refer figure 5.27 (b).

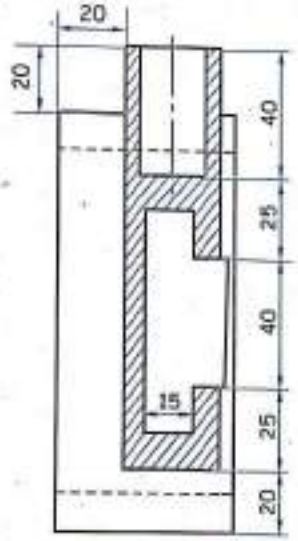

SEC. R.H.S.V.

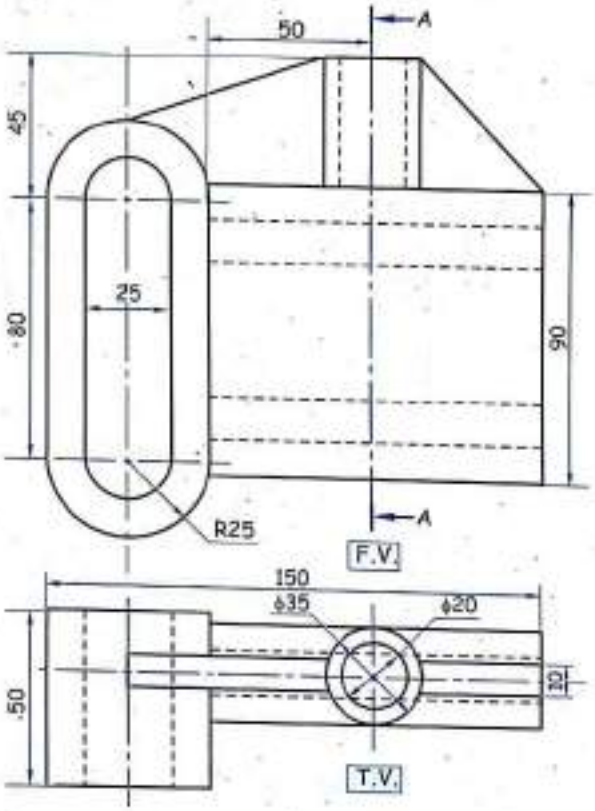

FIG. 5.27 (b)

Scanned by CamScanner

Problem 15

A pictorial view of a Machine Block is shown in figure 5.75 (a). Draw to full scale, the following views :

(a) An elevation along the direction of arrow F.

(b) Sectional end view from left on the section plane X-X.

(c) Plan.

Insert any six important dimensions. (Mar '94, M.U.)

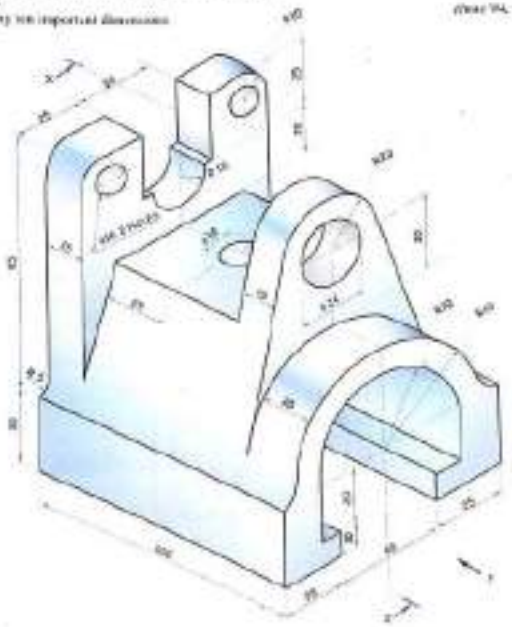

FIG. 1.29 (a)

Solution 15

Refer figure 1.29 (b).

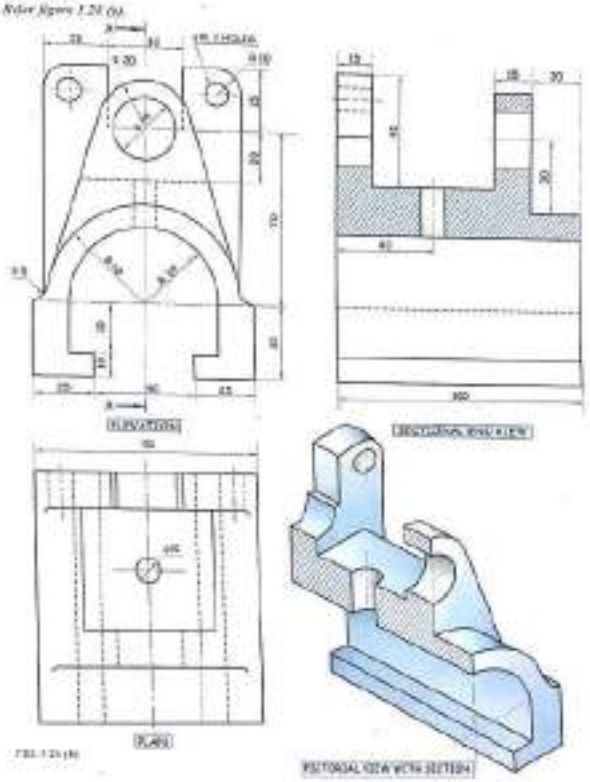

FIG. 1.29 (b)

Scanned by CamScanner

Problem 16

Figure 5.29 (a) shows a pictorial view of a Block. Draw the following views by using first angle method of projection :

(a) Front view along the direction of an arrow *X*.

(b) Sectional right hand side view.

(c) Top view. ***(May '91, M.U.)***

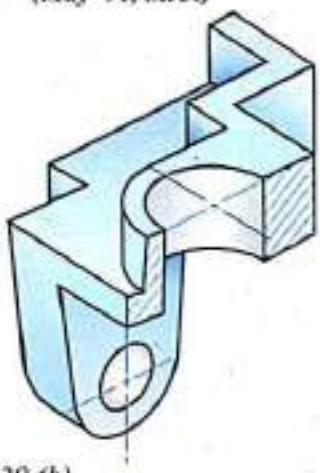

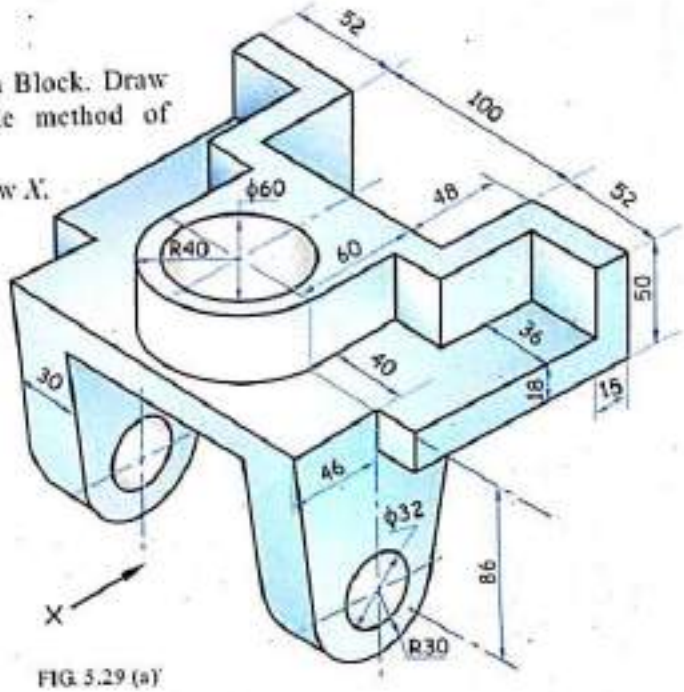

FIG. 5.29 (a)

Solution

Refer figure 5.29 (b).

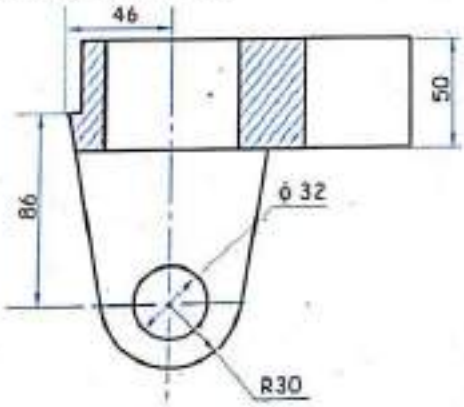

SEC. R.H.S.V.

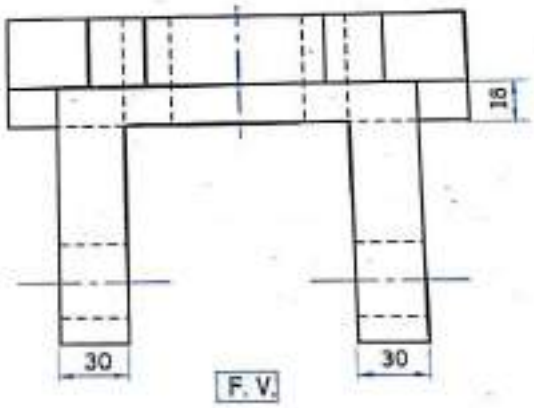

F. V.

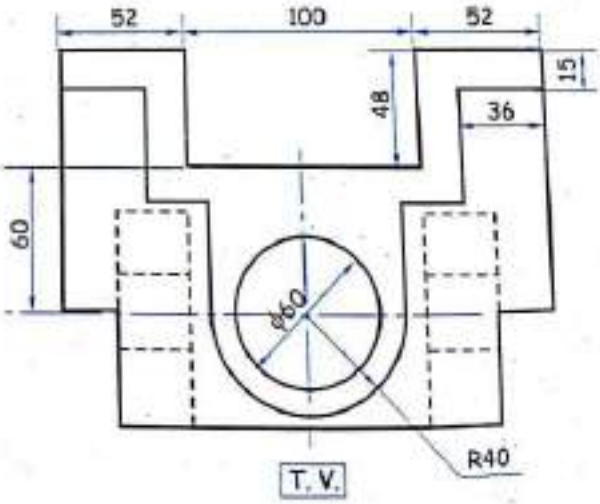

T. V.

FIG. 5.29 (b)

Scanned by CamScanner

Problem 17

A pictorial view of a Block is shown in the *figure 5.30 (a)*. Draw to scale, the following views :

(a) Front view in the direction of arrow *X*.

(b) Top view.

(c) Sectional left side view along section *A-A*.

(Nov.'91, Jan. '03, M.U.)

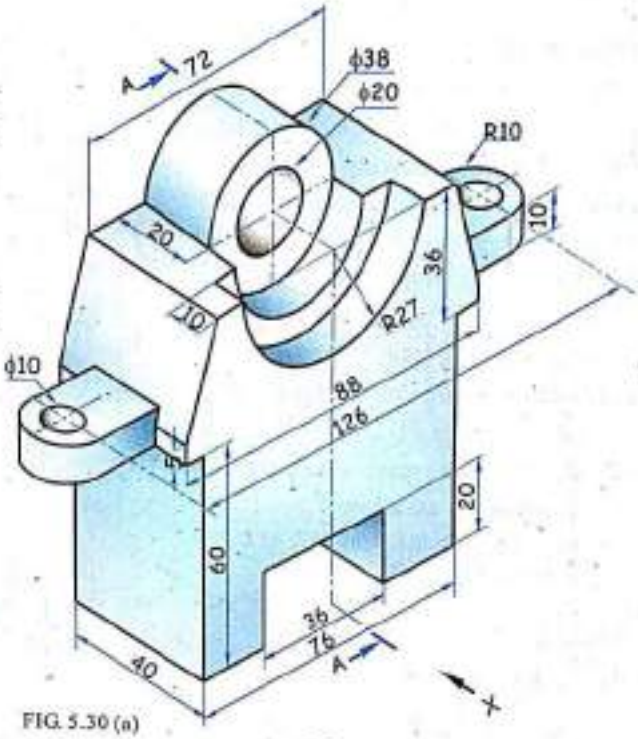

FIG. 5.30 (a)

Solution

Refer figure 5.30 (b).

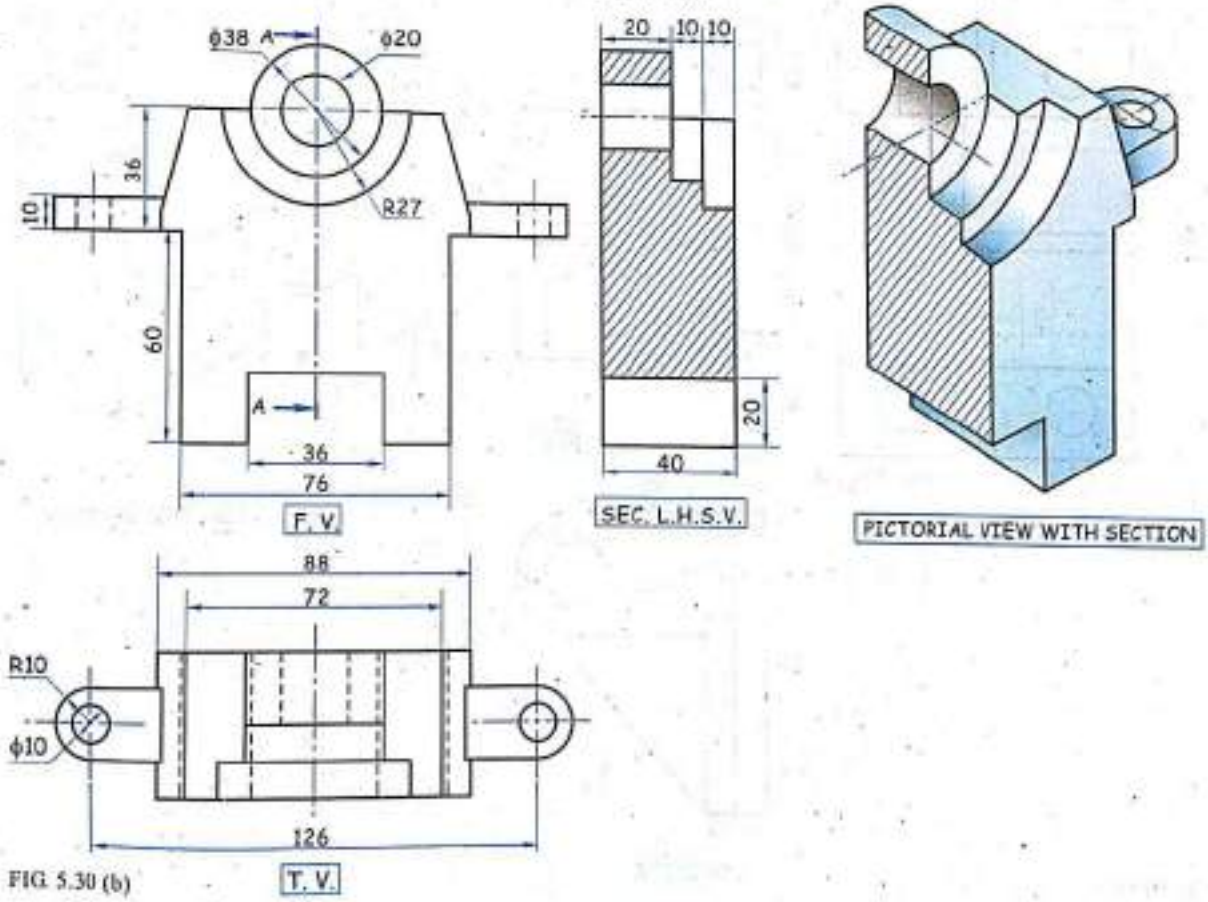

FIG. 5.30 (b)

Scanned by CamScanner

Problem 18

Figure 5.31 (a) shows a pictorial view of a Machine Block. Draw to full scale, the following views by using the first angle method of projection :

(a) Sectional front view in the direction of an arrow *X* and section along *A-A*.

(b) Sectional top view along the cutting plane *PQ*.

(c) Right side view along the direction of an arrow *Y*.

(Nov. '92, May '03, May '07, M.U.)

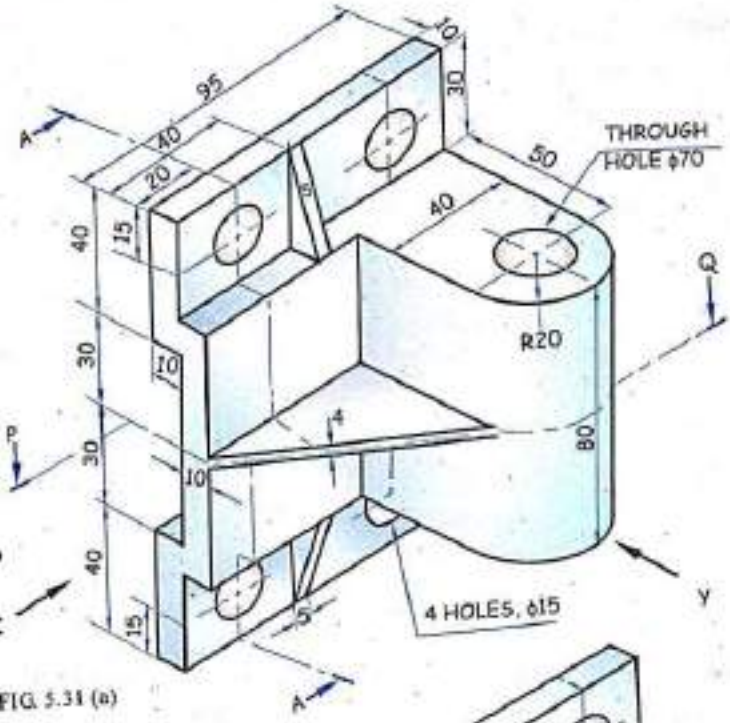

FIG. 5.31 (a)

Solution

Refer figure 5.31 (b).

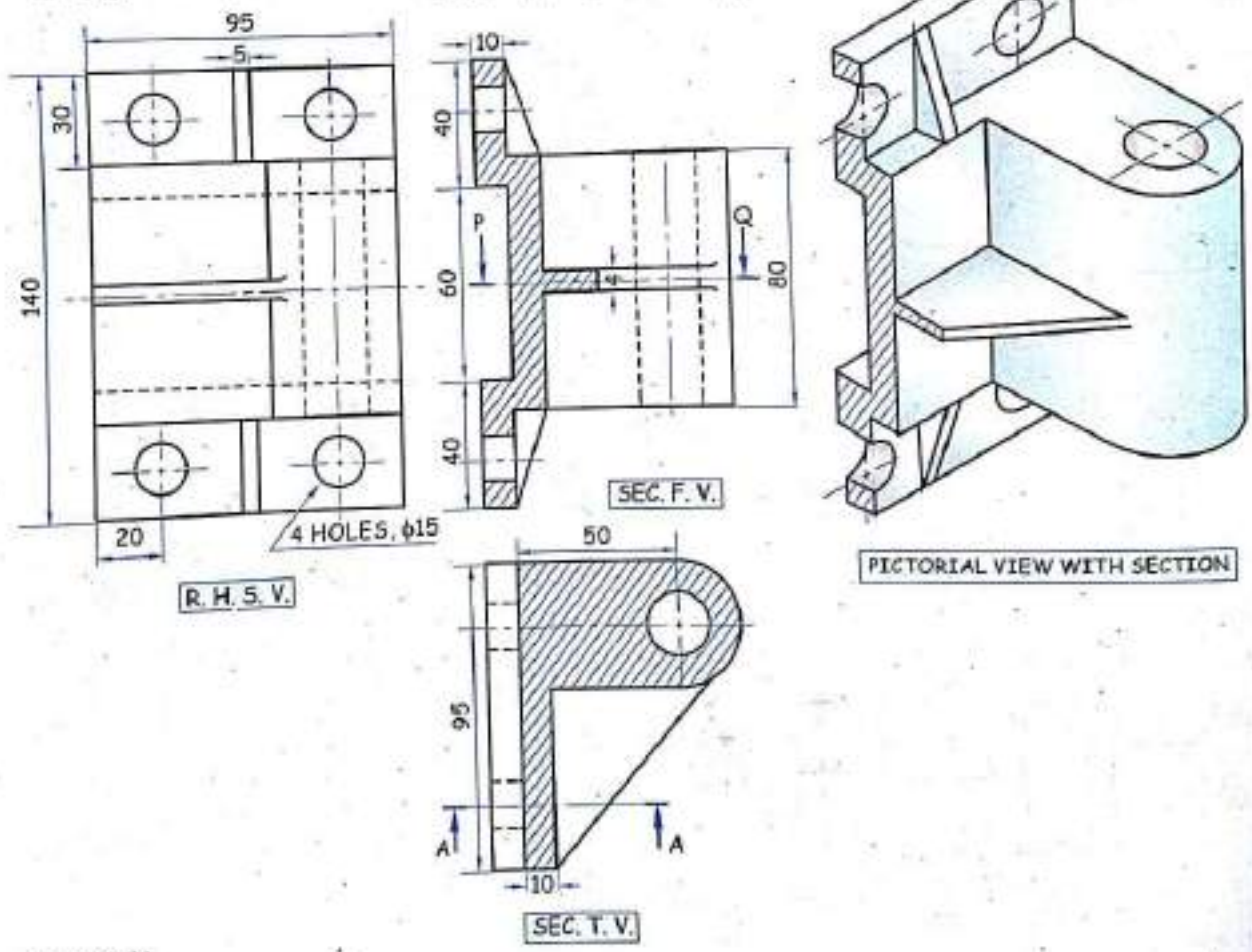

FIG. 5.31 (b)

Scanned by CamScanner

Problem 19

Figure 5.32 (a) shows a pictorial view of a Machine Part. Draw to full scale, the following views by using the first angle method of projection:

(a) Sectional front view looking along the direction of an arrow *X* and section along *A-A*.

(b) Top view.

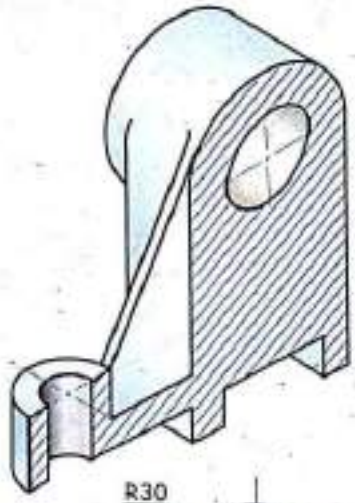

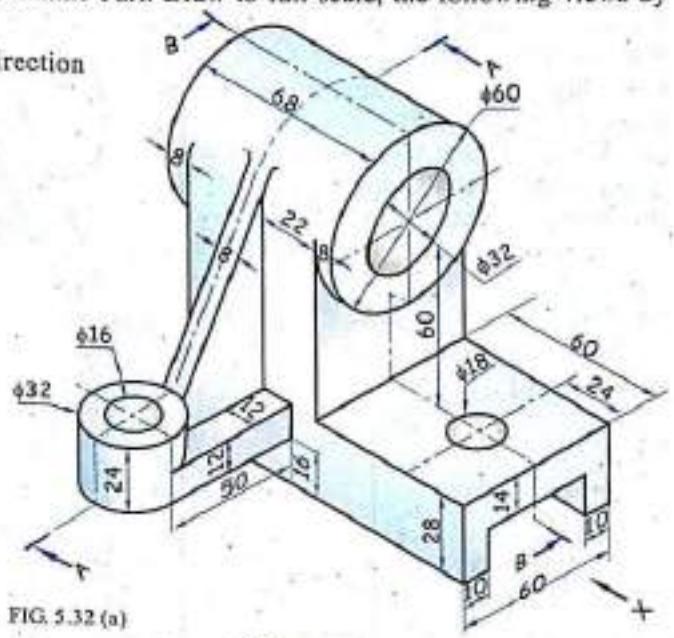

FIG. 5.32 (a)

Solution

Refer figure 5.32 (b).

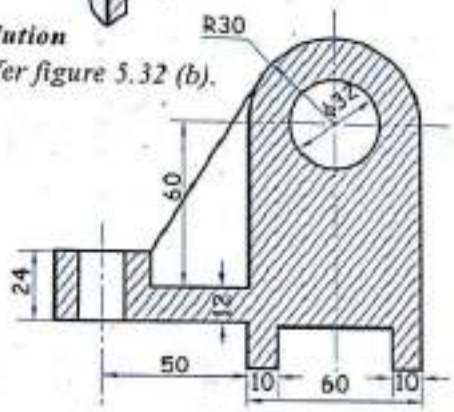

SEC. F. V.

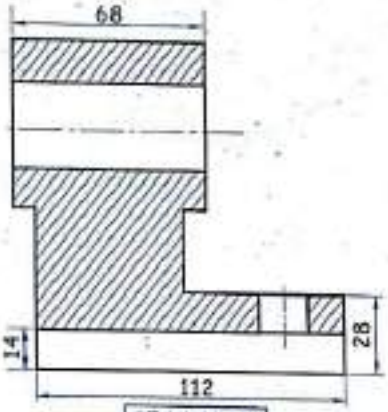

SEC. L.H.S.V.

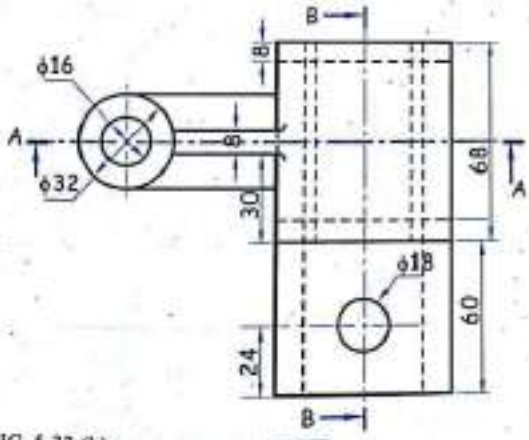

T. V.

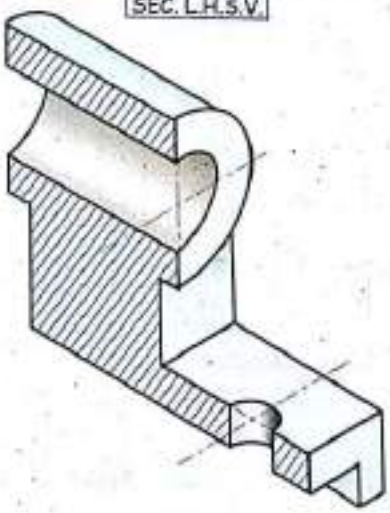

FIG. 5.32 (b)

Scanned by CamScanner

Problem 20

Figure 5.33 (a) shows a pictorial view of a Machine Part. Draw to scale full size, the following views by using the first angle method of projection:

(a) Sectional front view in the direction of an arrow *X* and section along *A-A*.

(b) Sectional left hand side view along section *B-B*. *(Dec. '93, M.U.)*

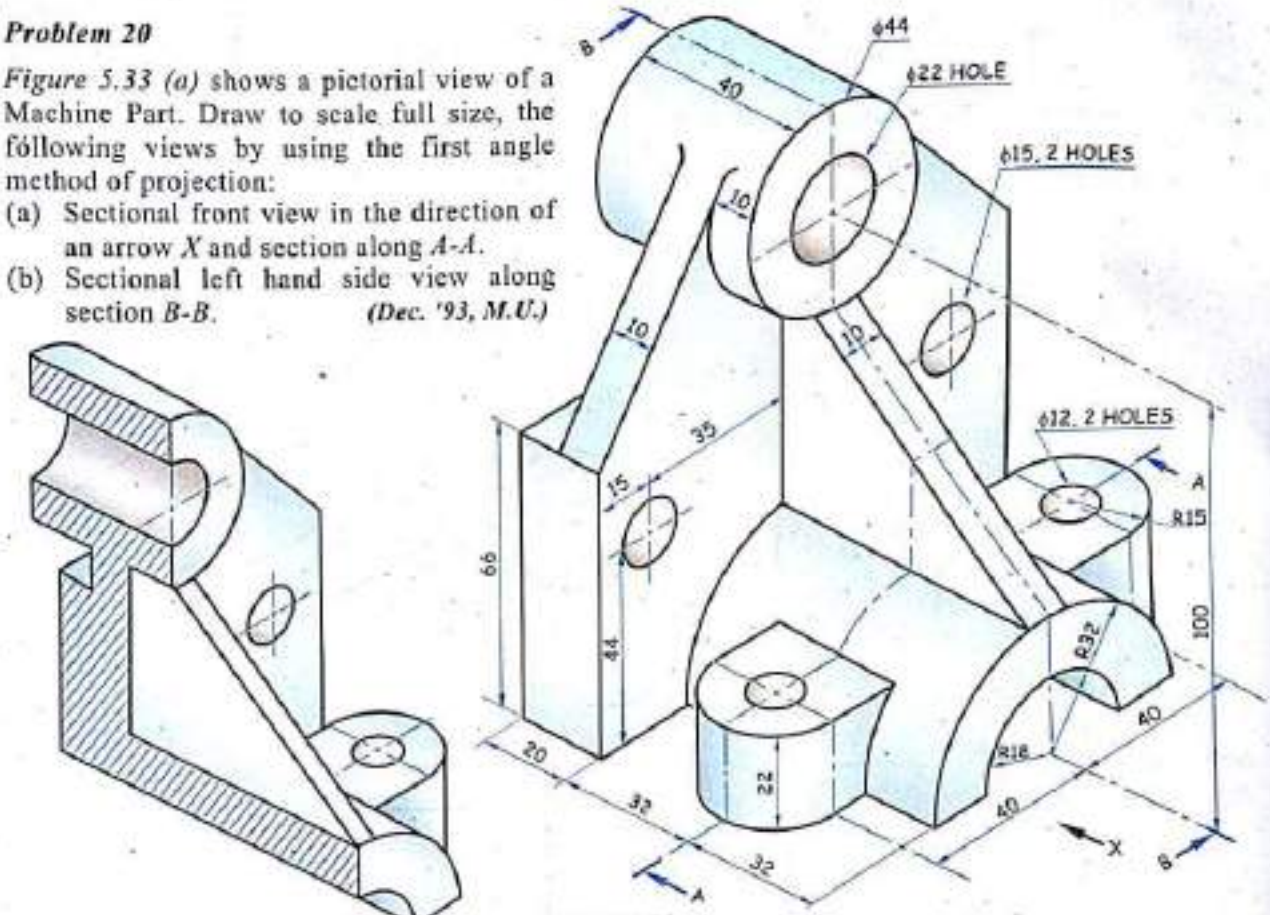

FIG. 5.33 (a)

Solution

Refer figure 5.33 (b).

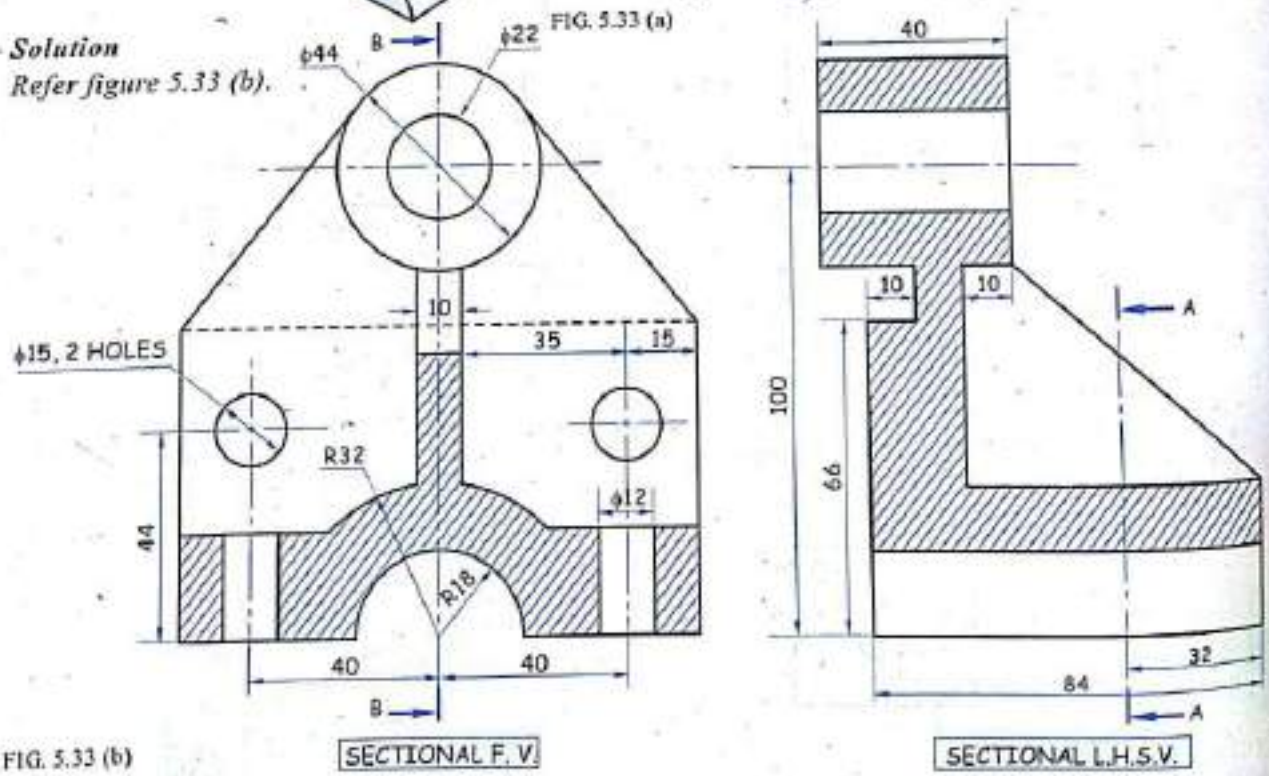

FIG. 5.33 (b)

Scanned by CamScanner

Problem 21

Figure 5.34 (a) shows a pictorial view of a Machine Part. Draw to scale full size, the following views by using the first angle method of projection :

(a) Sectional elevation along the direction of an arrow *X* and section along *A-A*.

(b) Right hand side view.

(c) Top view.

(May '94, Dec. '10, M.U.)

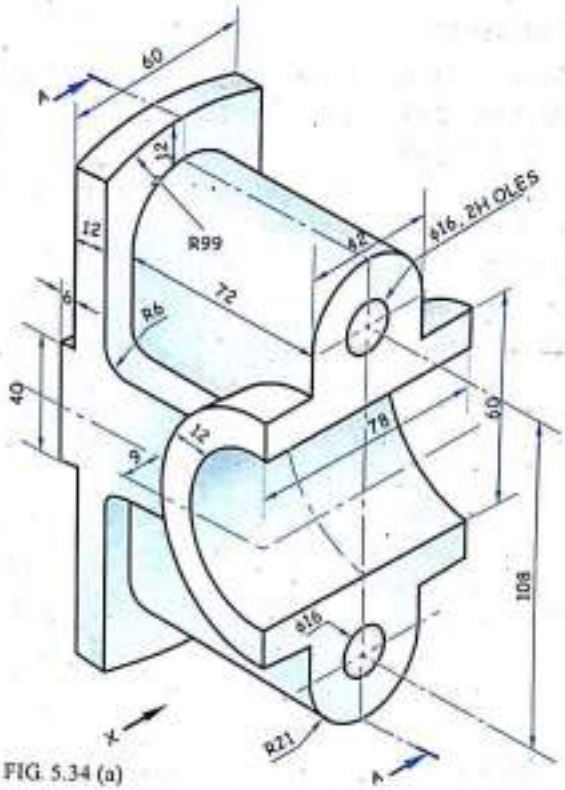

FIG. 5.34 (a)

Solution

Refer figure 5.34 (b).

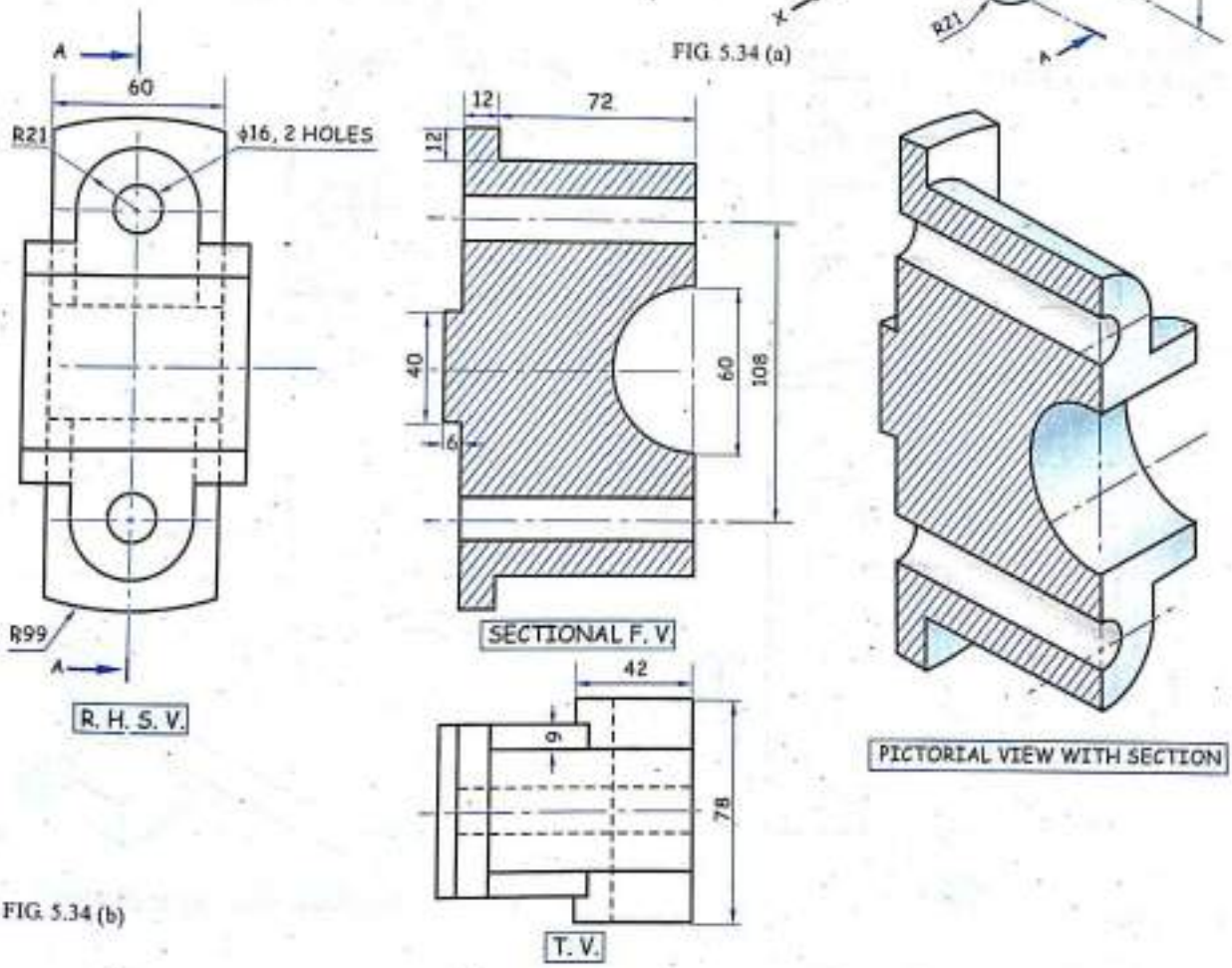

FIG. 5.34 (b)

Scanned by CamScanner

Problem 22

Figure 5.35 (a) shows a pictorial view of a Machine Part. Draw the following views using 1:1 scale :

(a) Sectional front view along *A-A* looking in the direction of arrow *X*.

(b) Left hand side view.

(c) Top view.

Show all the hidden details.

(Dec. '94, Nov. '04, M.U.)

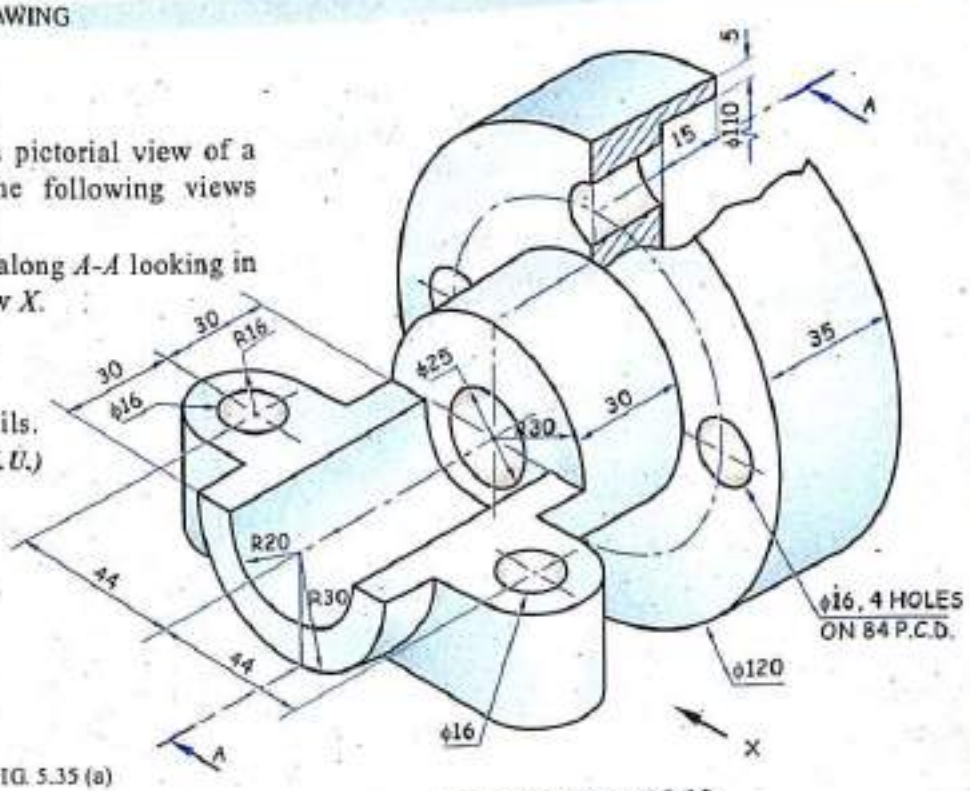

FIG. 5.35 (a)

Solution

Refer figure 5.35 (b).

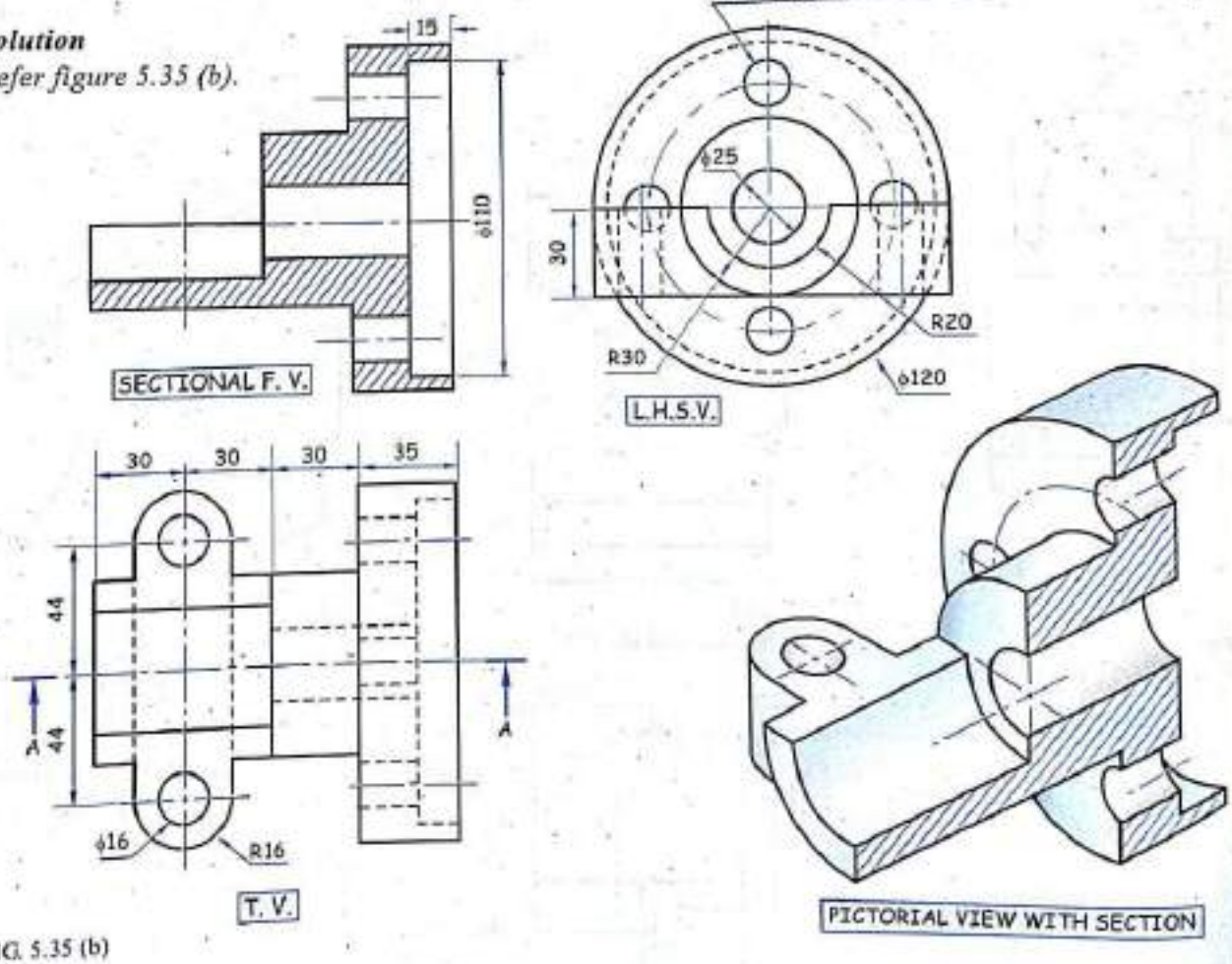

FIG. 5.35 (b)

Scanned by CamScanner

Problem 23

Figure 5.36 (a) shows a pictorial view of a Machine Part. Draw the following views using 1:1 scale :

(a) Sectional front view along *S-S* looking in the direction of an arrow *F*.

(b) Left hand side view.

(c) Top view.

Show all the hidden details.

(May '95, M.U.)

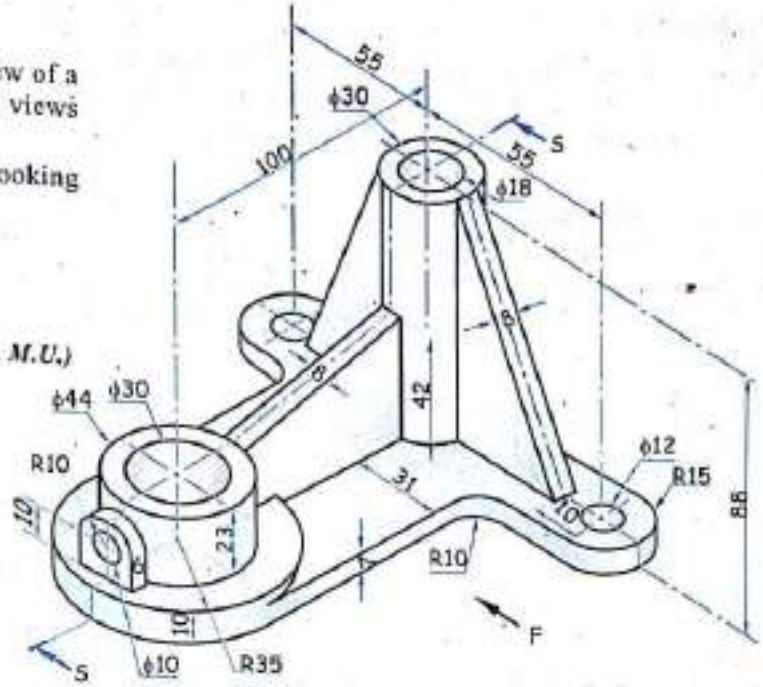

FIG. 5.36 (a)

Solution

Refer figure 5.36 (b).

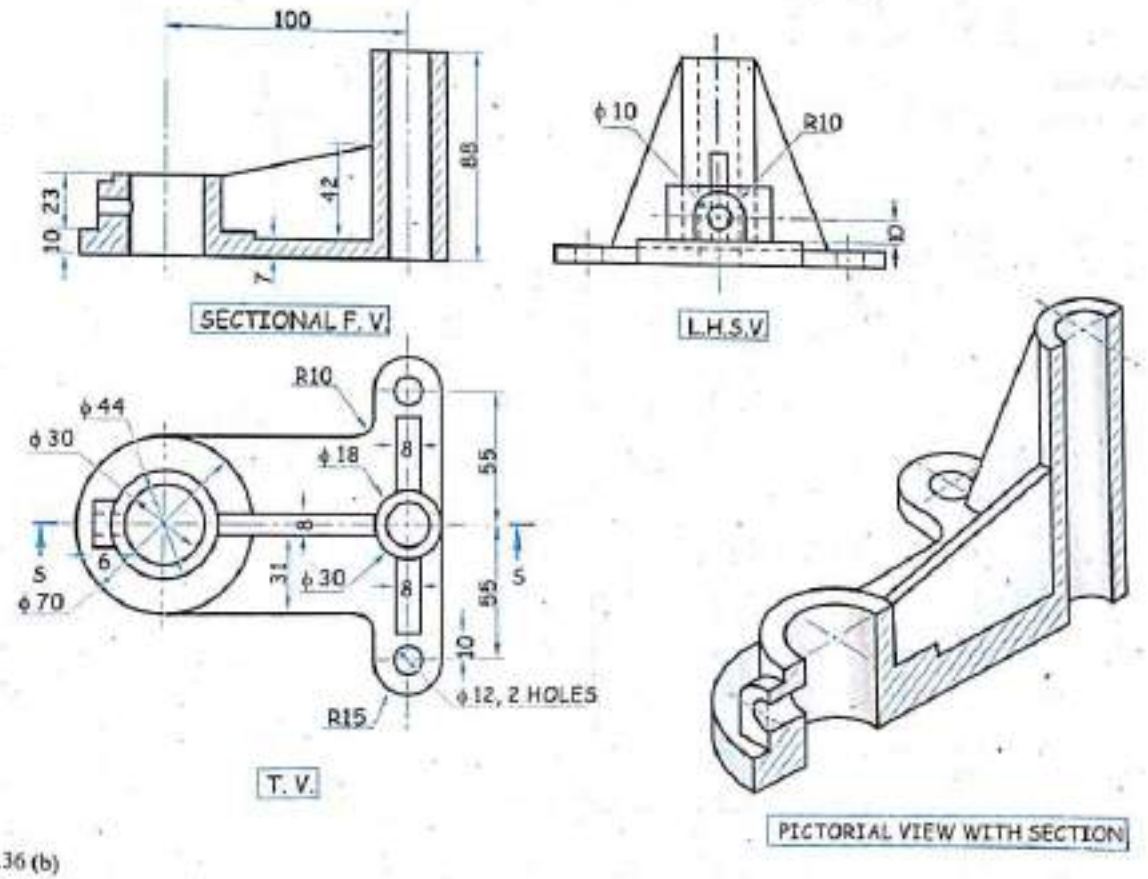

FIG. 5.36 (b)

Scanned by CamScanner

Problem 24

Figure 5.37 (a) shows a pictorial view of a Bracket. Draw using the enlarging scale 2:1 and the first angle projection method, the following views :

(a) Sectional front view along *A-A*, looking in the direction of arrow *P*.

(b) Sectional top view along *B-B*.

(c) Left hand side view.

Show all the hidden details and take all the unspecified radii as 3 R.

(Dec. '95, M.U.)

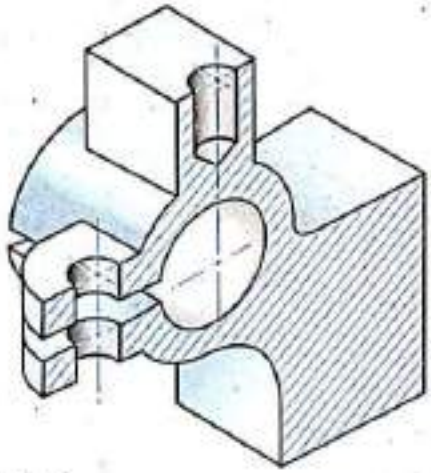

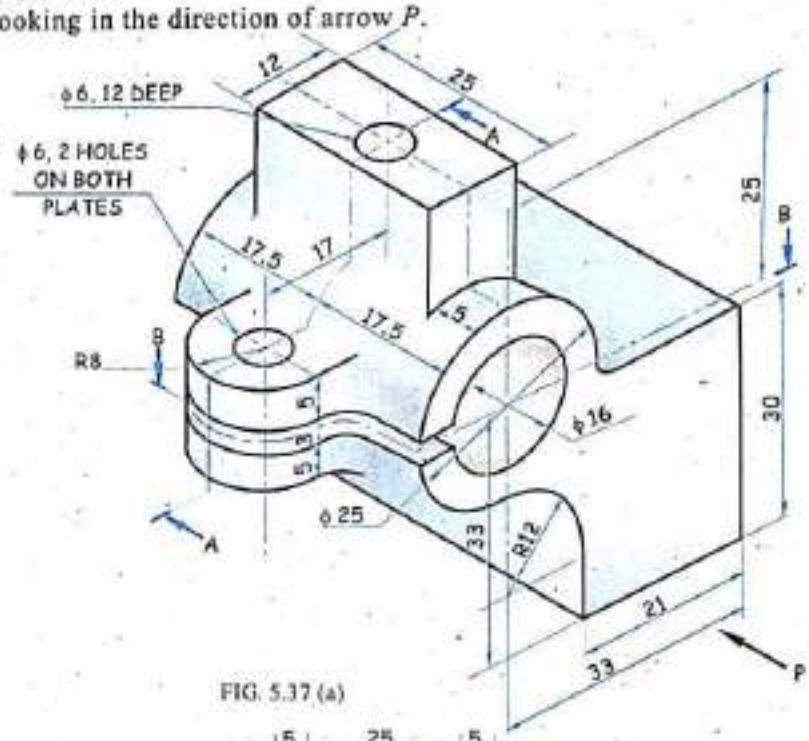

FIG. 5.37 (a)

Solution

Refer figure 5.37 (b).

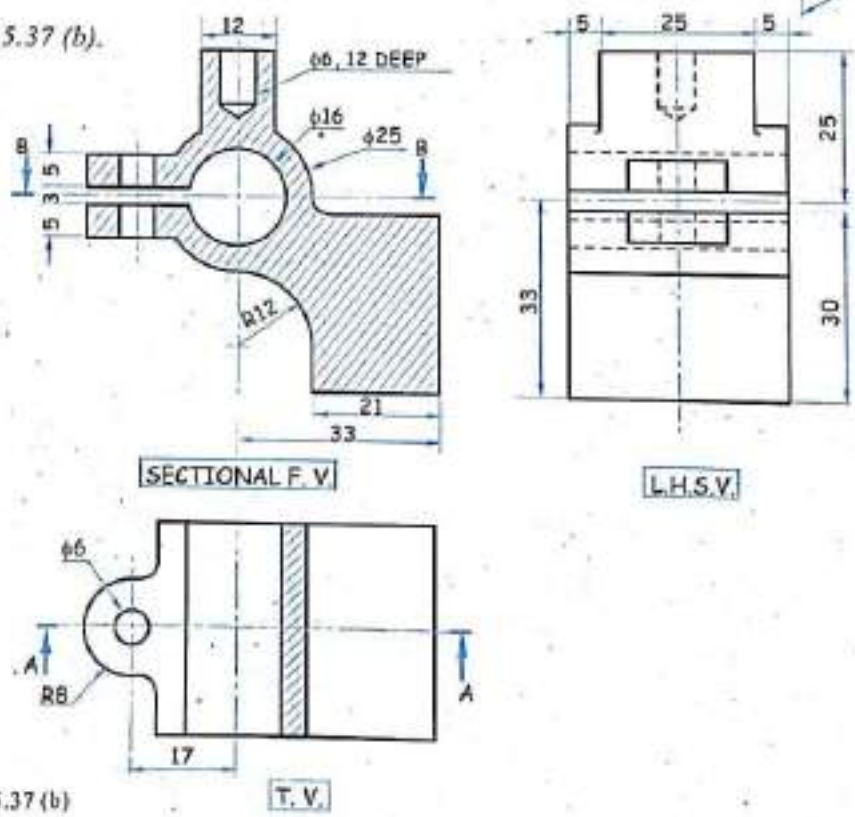

FIG. 5.37 (b)

Scanned by CamScanner

Problem 25

Figure 5.38 (a) shows an object. Draw the following :

(a) Sectional front view on section *A-A* looking in the direction of an arrow *X*.

(b) Top view.

(c) Left hand side view.

Use first angle projection method only.

(May '96, June '05, M.U.)

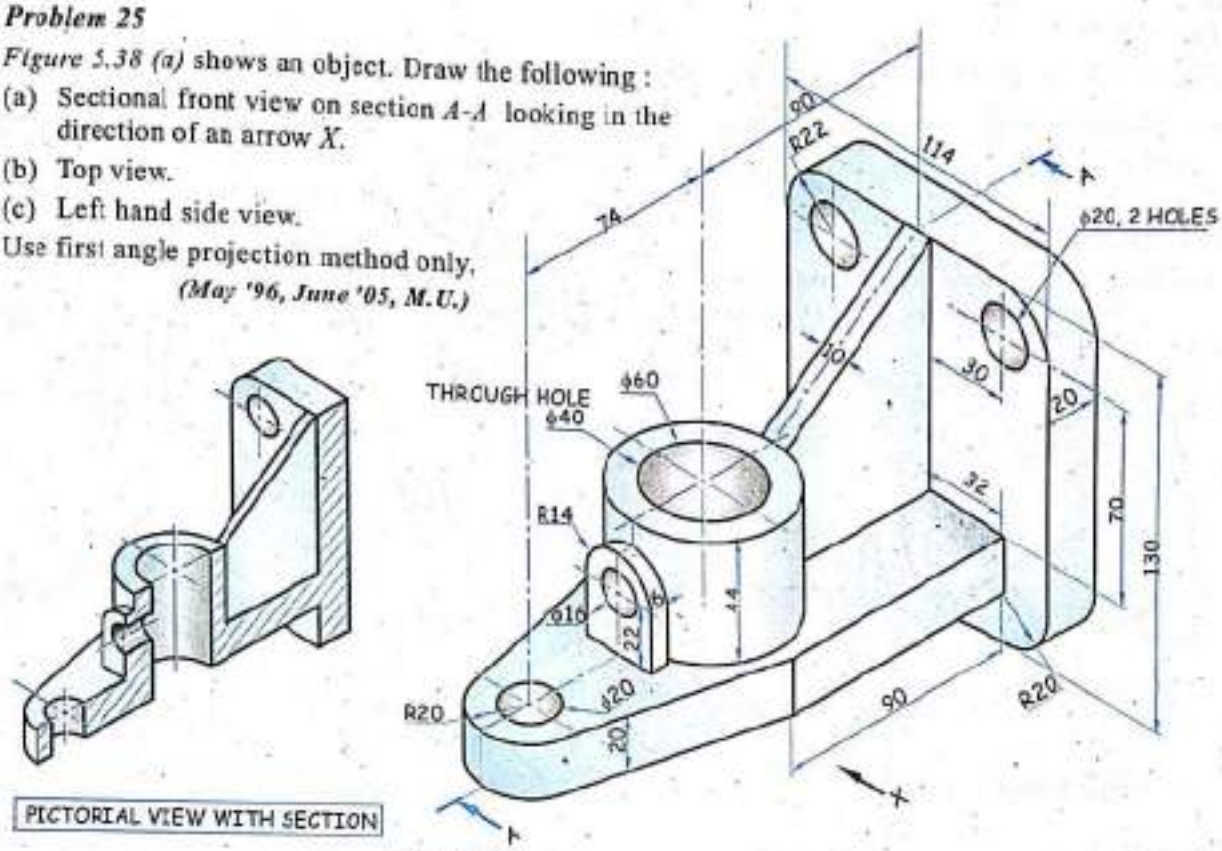

FIG. 5.38 (a)

Solution

Refer figure 5.38 (b).

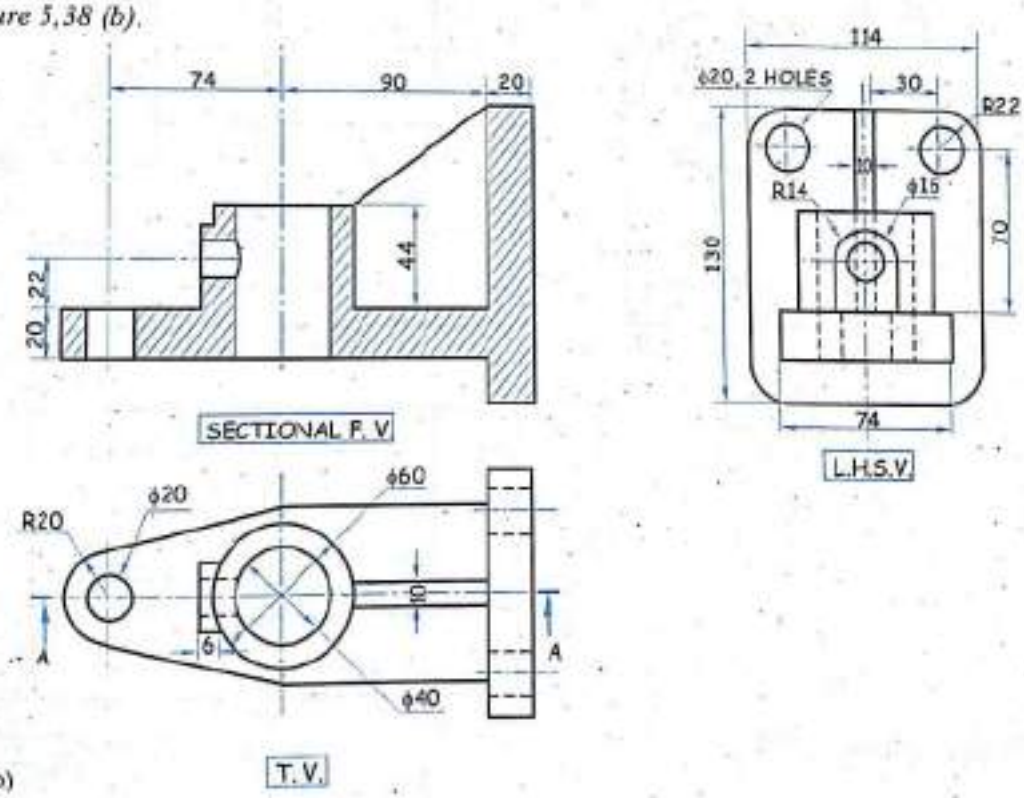

FIG. 5.38 (b)

Scanned by CamScanner

Problem 26

Figure 5.39 (a) shows isometric view of a Block. Draw the following :

(a) Sectional front view looking along arrow *Y* (section *B-B*)..

(b) Right hand side view.

(c) Top view.

Use first angle method of projection.

(May '96, May '11, M.U.)

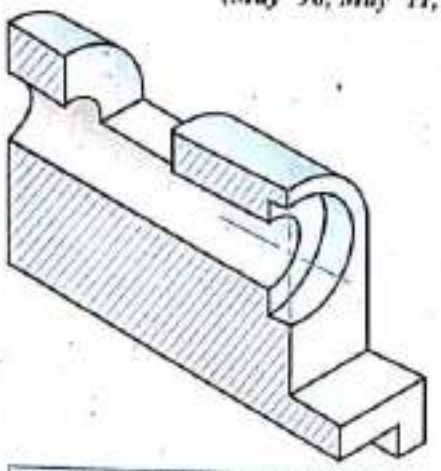

PICTORIAL VIEW WITH SECTION

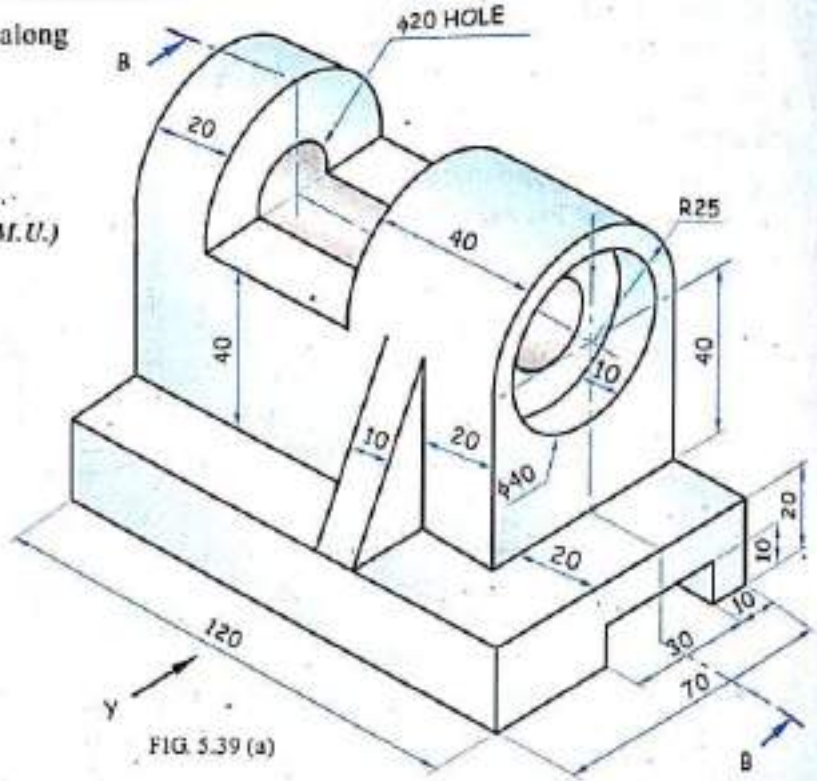

FIG. 5.39 (a)

Solution

Refer figure 5.39 (b)

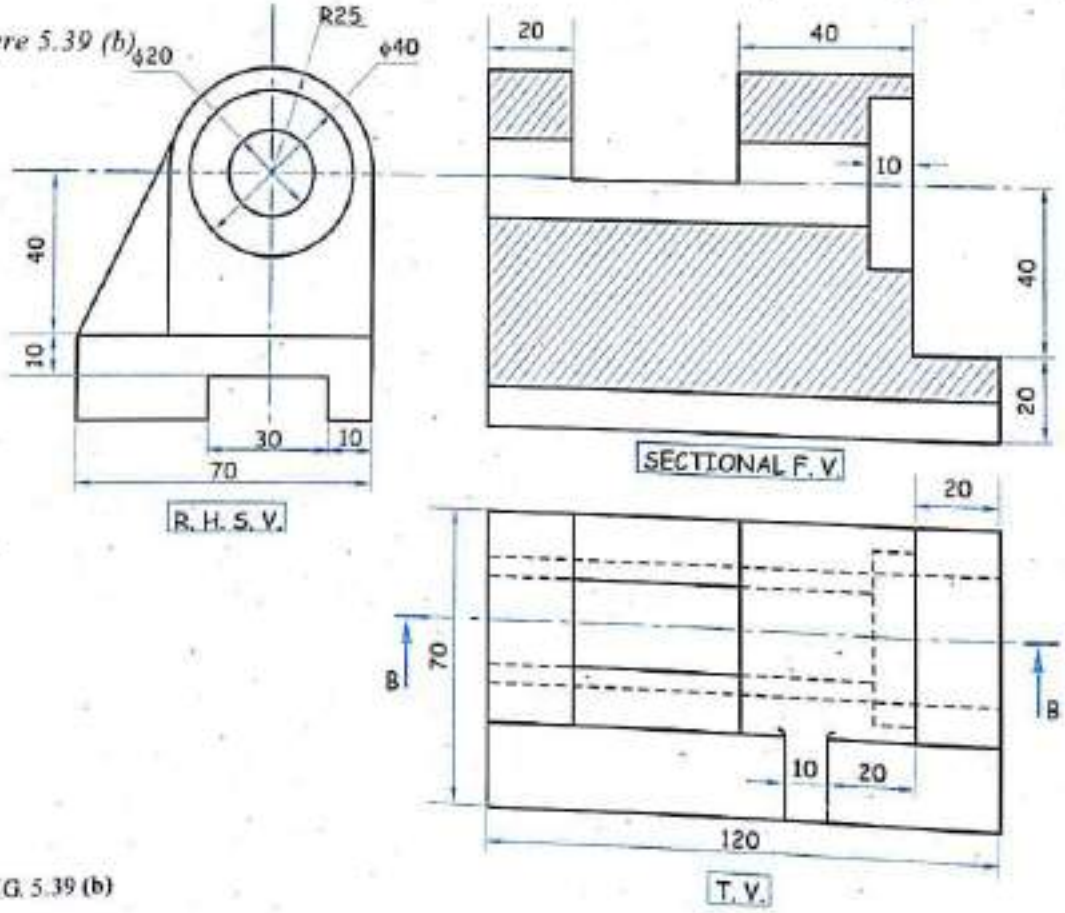

FIG. 5.39 (b)

Scanned by CamScanner

Problem 27

Figure 5.40 (a) shows a pictorial view of a Machine Part. Draw the following views by using the first angle method of projection:

(a) Sectional Front view section on *B-B*.

(b) Top view.

(c) Side view from left.

(d) Give important dimensions.

(Dec. '96, M.U.)

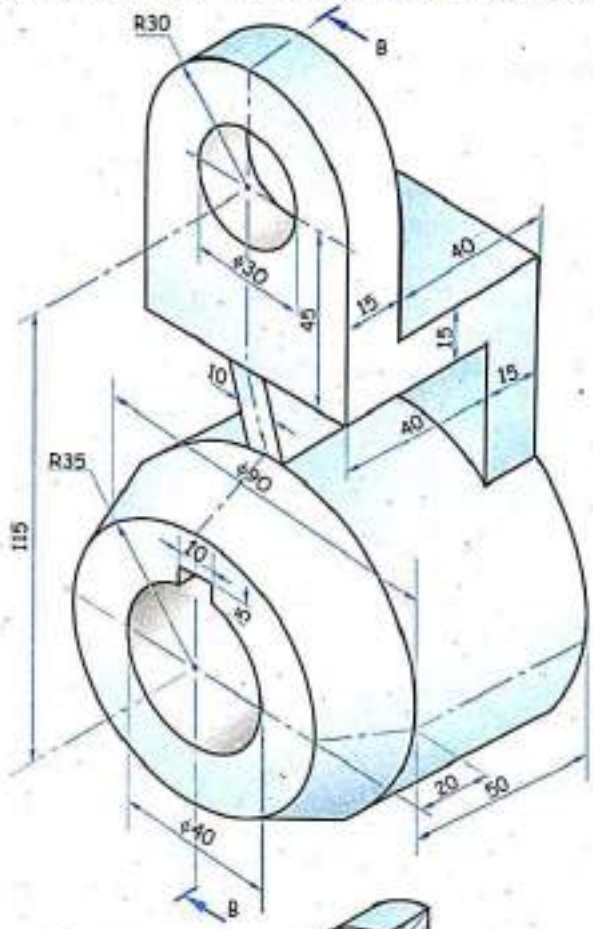

FIG. 5.40 (a)

Solution

Refer figure 5.40 (b).

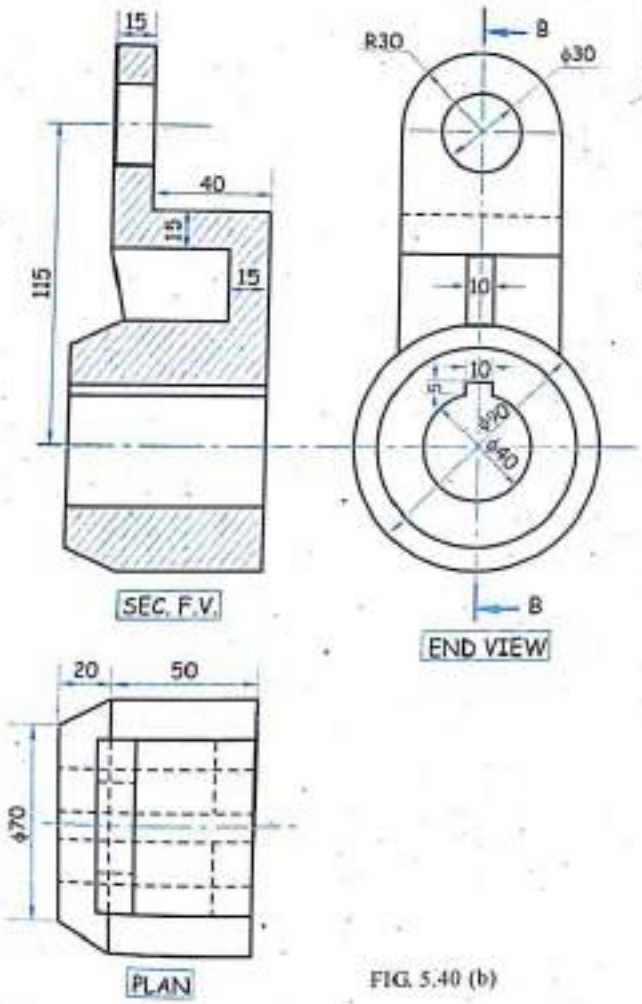

FIG. 5.40 (b)

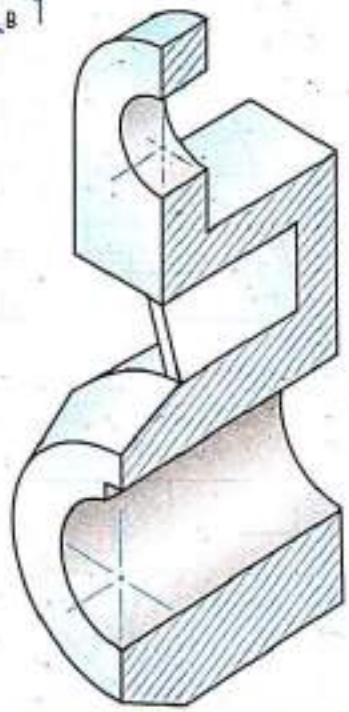

PICTORIAL VIEW WITH SECTION

Scanned by CamScanner

Problem 28

Figure 5.41 (a) shows a pictorial view of an object. Draw to scale the following views by using first angle method of projection :

(a) Front view.

(b) Sectional side view from left on section *A-B*.

(c) Sectional top view on section *C-D*.

(May '97, M.U.)

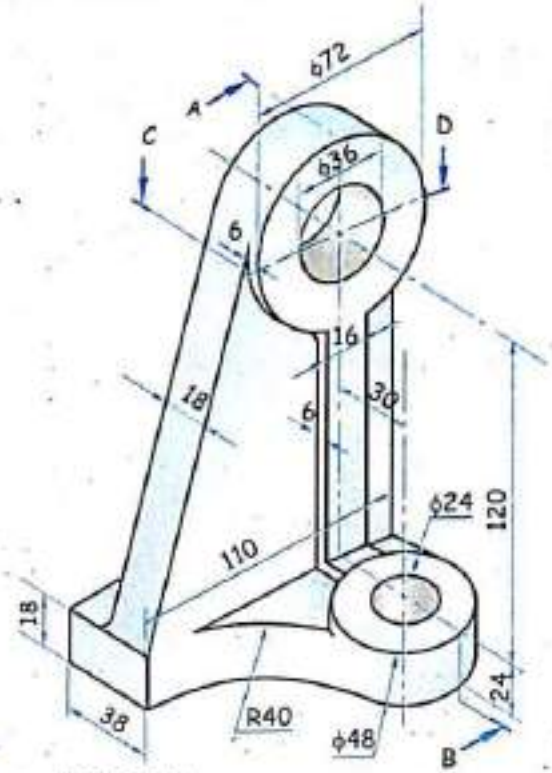

FIG. 5.41 (a)

Solution

Refer figure 5.41 (b).

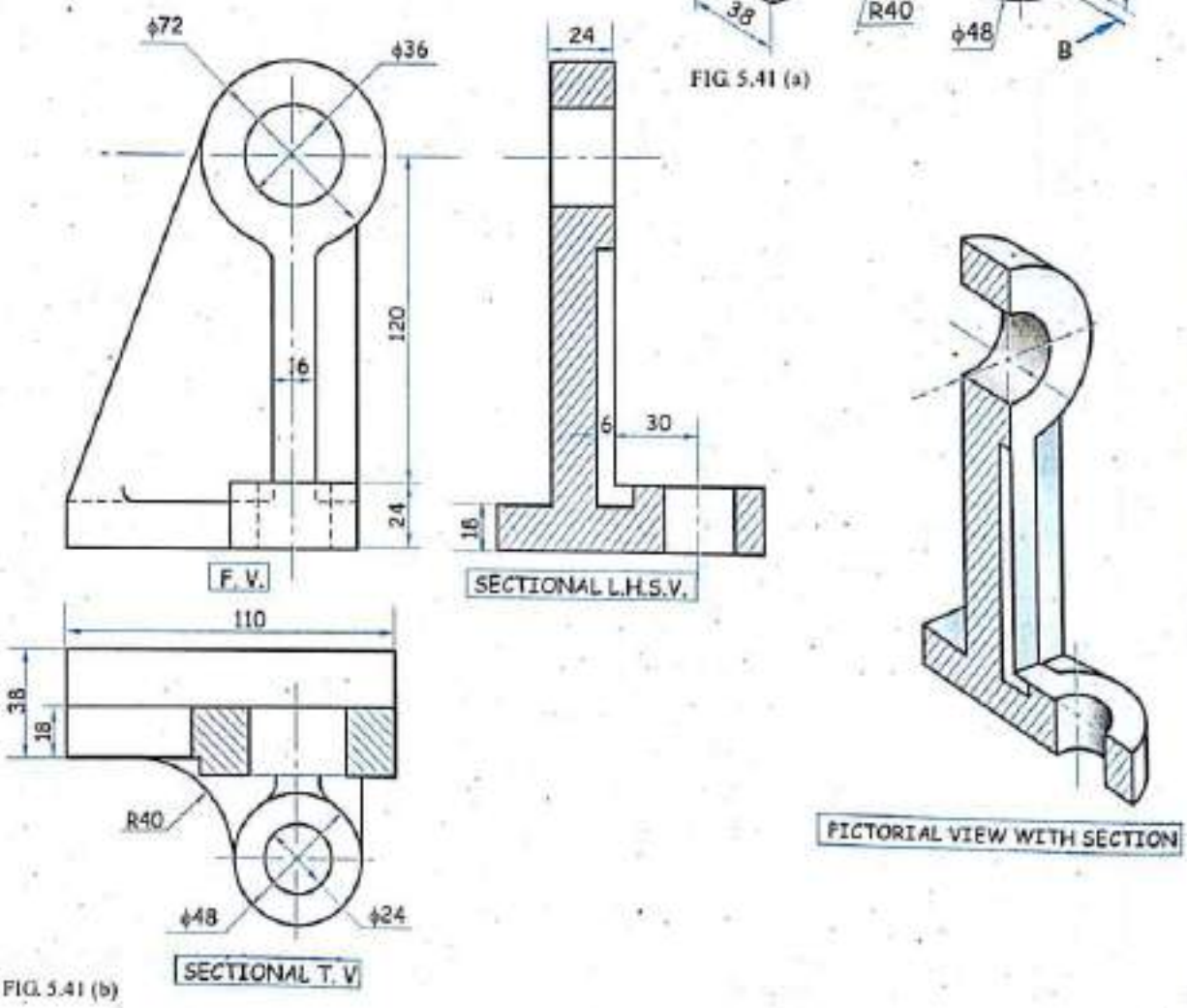

FIG. 5.41 (b)

Scanned by CamScanner

Problem 29

Figure 5.42 (a) shows an isometric view of a Block. Draw the following :

(a) Front view looking in the direction of arrow *X*.

(b) Top view.

(c) Sectional left hand side view along section '*A-A*'.

(May '98, M.U.)

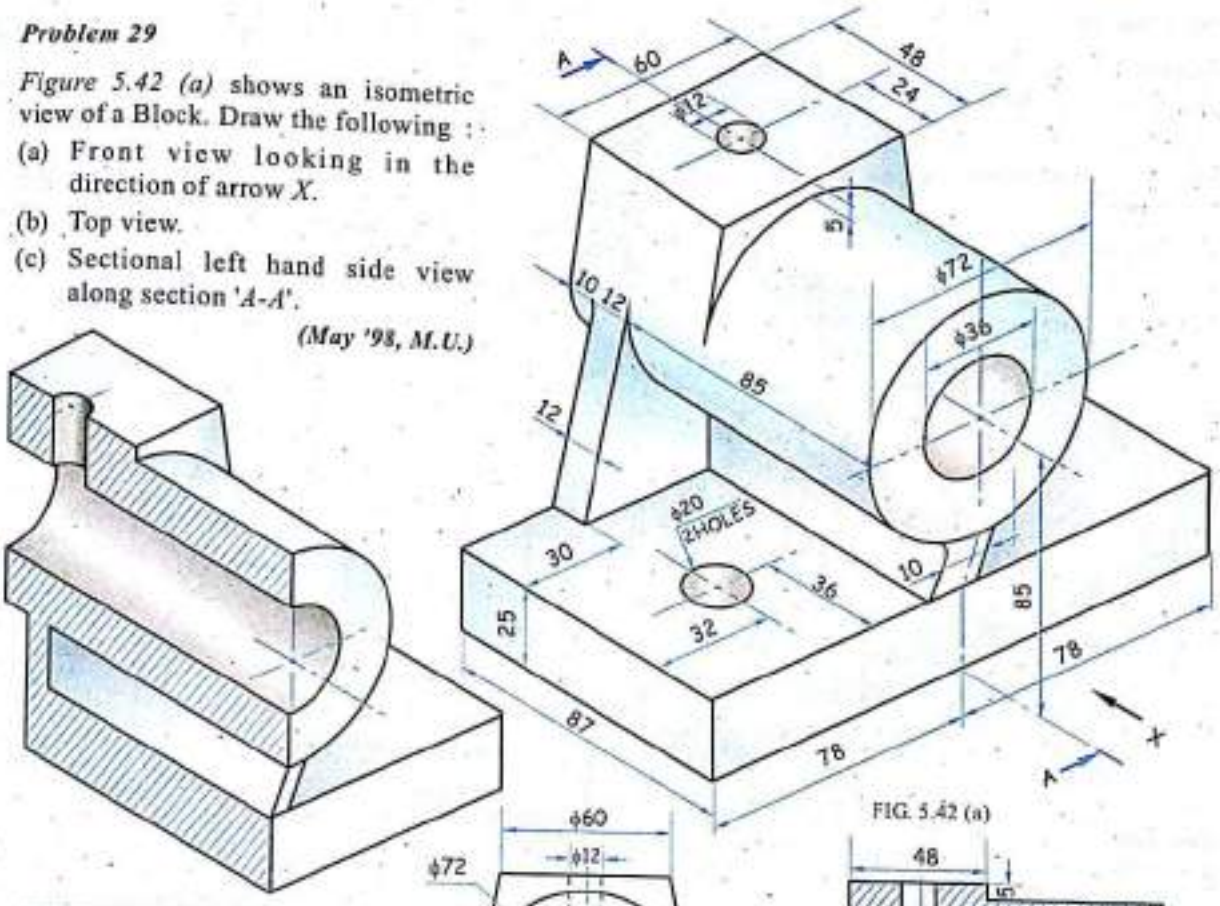

FIG. 5.42 (a)

PICTORIAL VIEW WITH SECTION

Solution

Refer figure 5.42 (b).

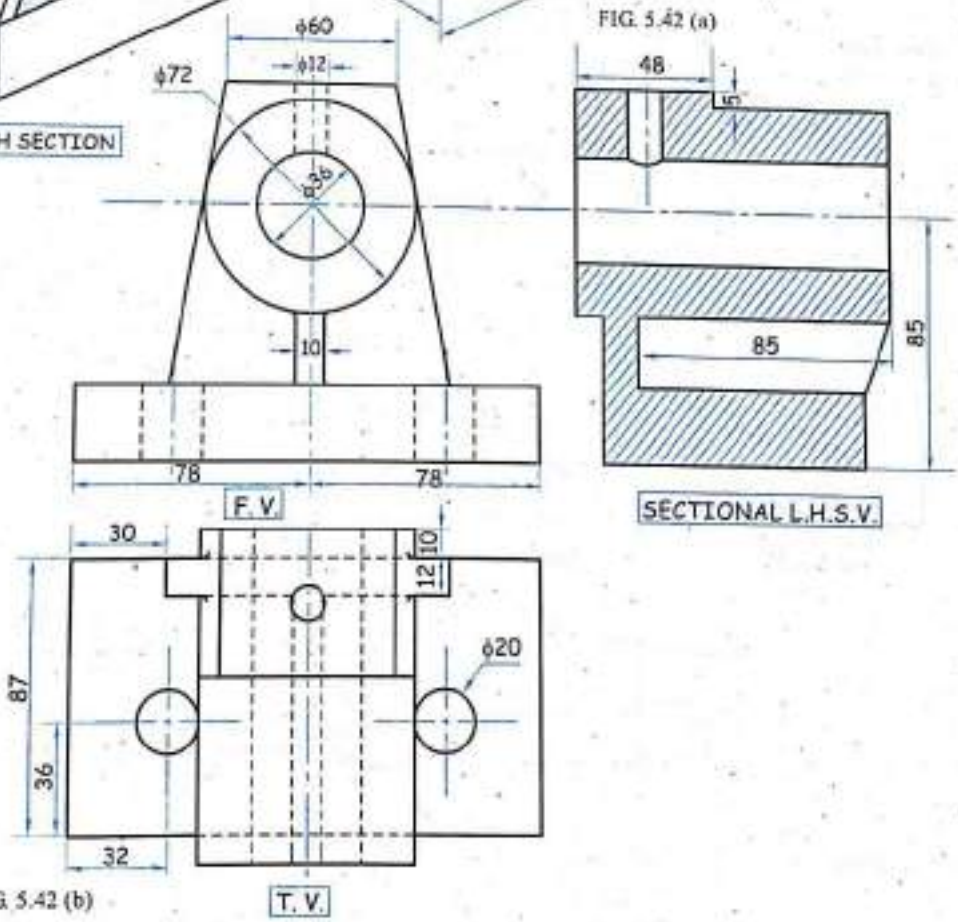

FIG. 5.42 (b)

Scanned by CamScanner

Problem 30

Figure 5.43 (a) shows a Block. Draw the following views using first angle convention.

(a) Sectional front view in the direction *X*.

(b) Top view.

(c) View from left. *(Dec. '98, M.U.)*

(d) View from right. *(Dec. '99, M.U.)*

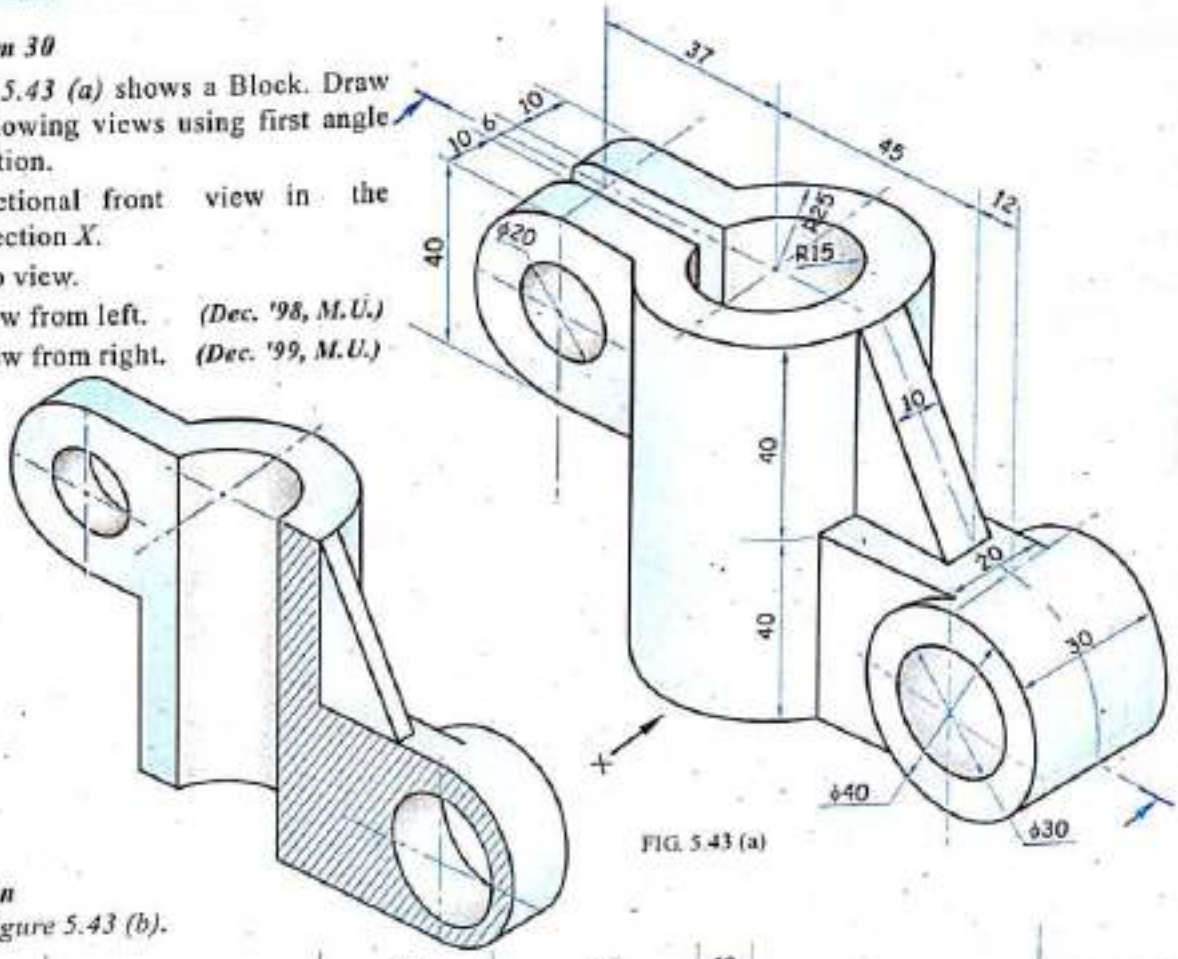

FIG. 5.43 (a)

Solution

Refer figure 5.43 (b).

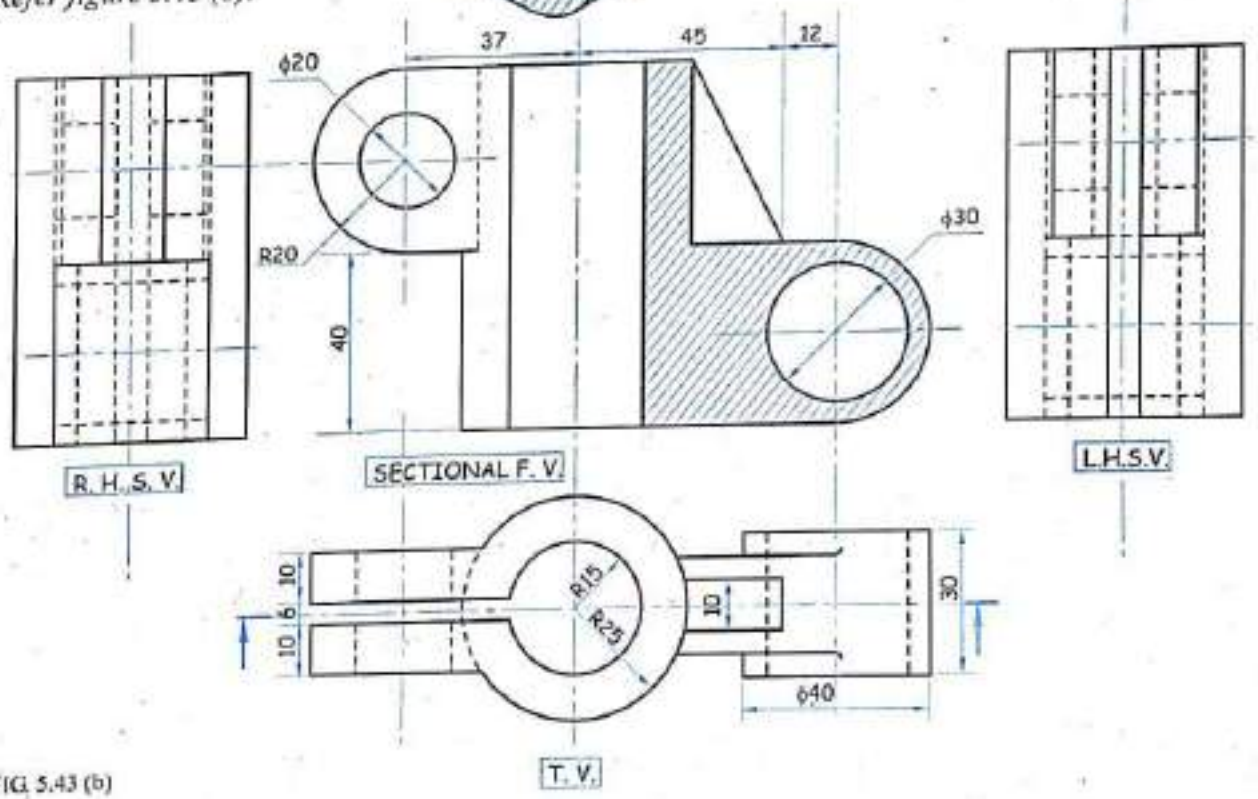

FIG. 5.43 (b)

Scanned by CamScanner

Problem 31

The *figure 5.44 (a)* shows a pictorial view of a Bracket. Draw to full scale the following views :

(a) Sectional front view section *A-A*.

(b) Top view.

(c) Right hand side view.

Show any ten major dimensions.

(Dec. '03, M.U.)

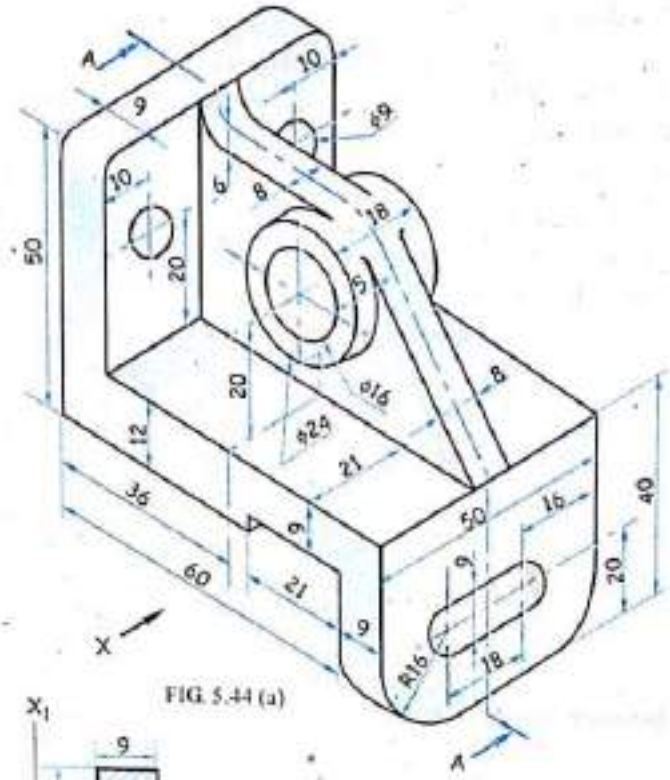

FIG. 5.44 (a)

Solution : *Refer figure 5.44 (b)*

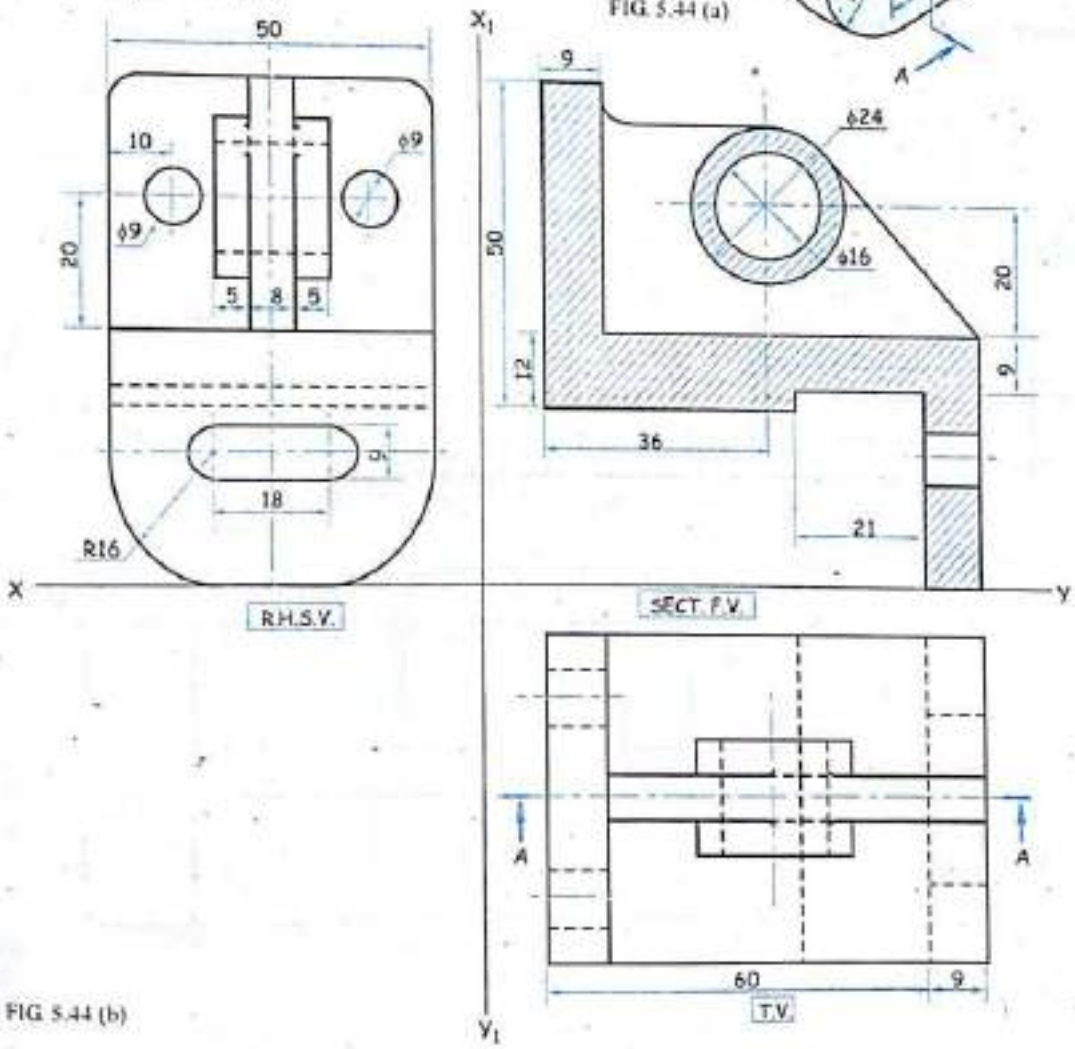

FIG. 5.44 (b)

Scanned by CamScanner

Problem 32

Figure 5.45 (a) shows a pictorial view of a Machine Part. Draw to full scale the following views :

(a) Sectional front view along *A - A*

(b) Top view

(c) Sectional side view (*P-Q*).

Insert all dimensions.

(June '06, May '07, M.U.)

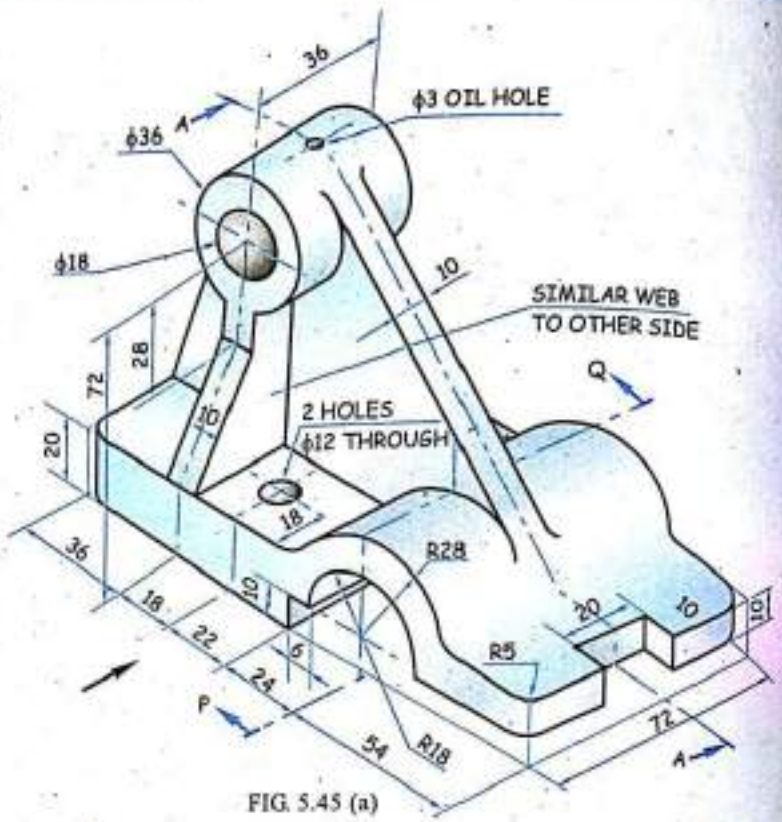

FIG. 5.45 (a)

Solution : *Refer figure 5.45 (b)*

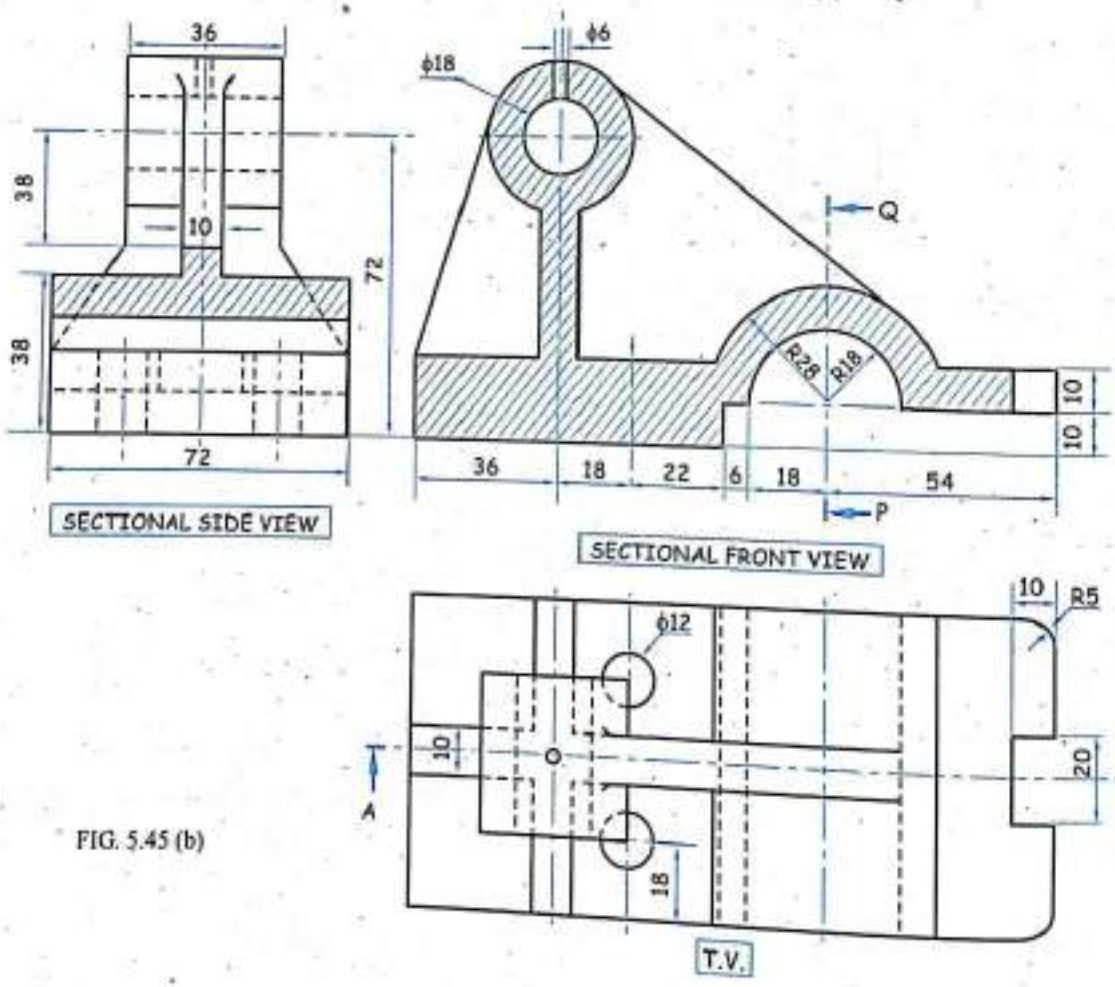

FIG. 5.45 (b)

Scanned by CamScanner

Problem 33

Figure 5.46 (a) shows a pictorial view of a bracket. Draw the following using full scale.

(a) Front view in direction *X*.

(b) Sectional left side view on *A - A*.

(c) Sectional top view on *B-B*.

Insert all dimensions. *(Dec. '06, M.U.)*

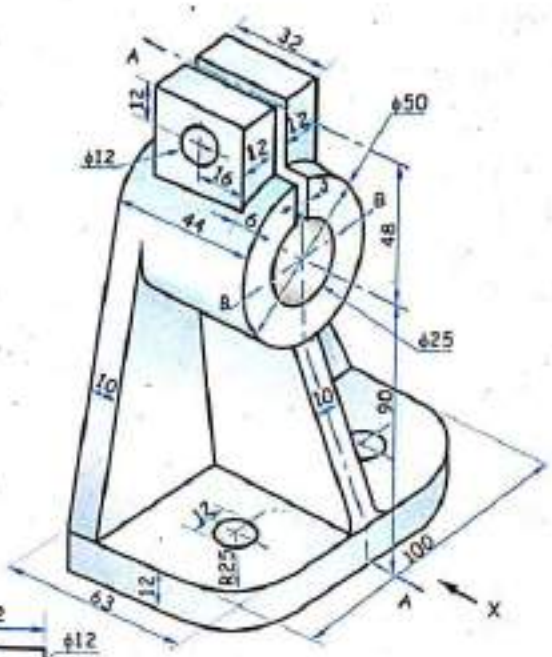

FIG. 5.46 (a)

Solution : *Refer figure 5.46 (b)*

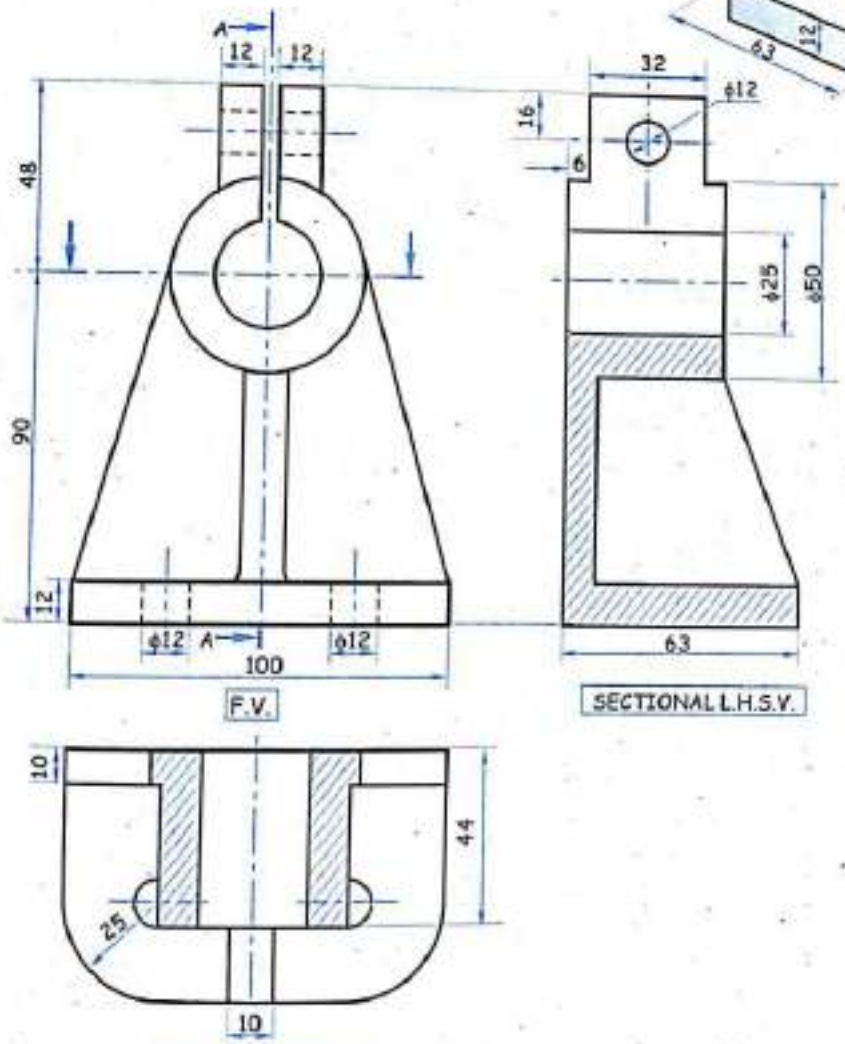

FIG. 5.46 (b)

Scanned by CamScanner

Problem 34

A pictorial view of a Guide Bracket is shown in *figure 5.47 (a)*. Draw :

(a) Sectional elevation along plane *A-A* in the direction of arrow *X*.

(b) End view in direction of arrow *Y*.

(c) Plan.

Insert at least ten major dimensions.

(May '08, M.U.)

Solution : *Refer figure 5.47 (b).*

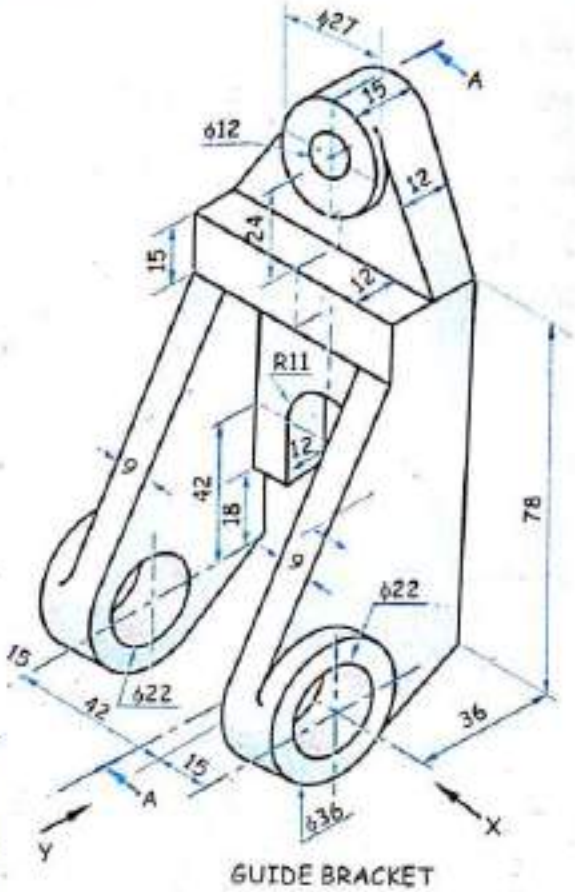

FIG. 5.47 (a)

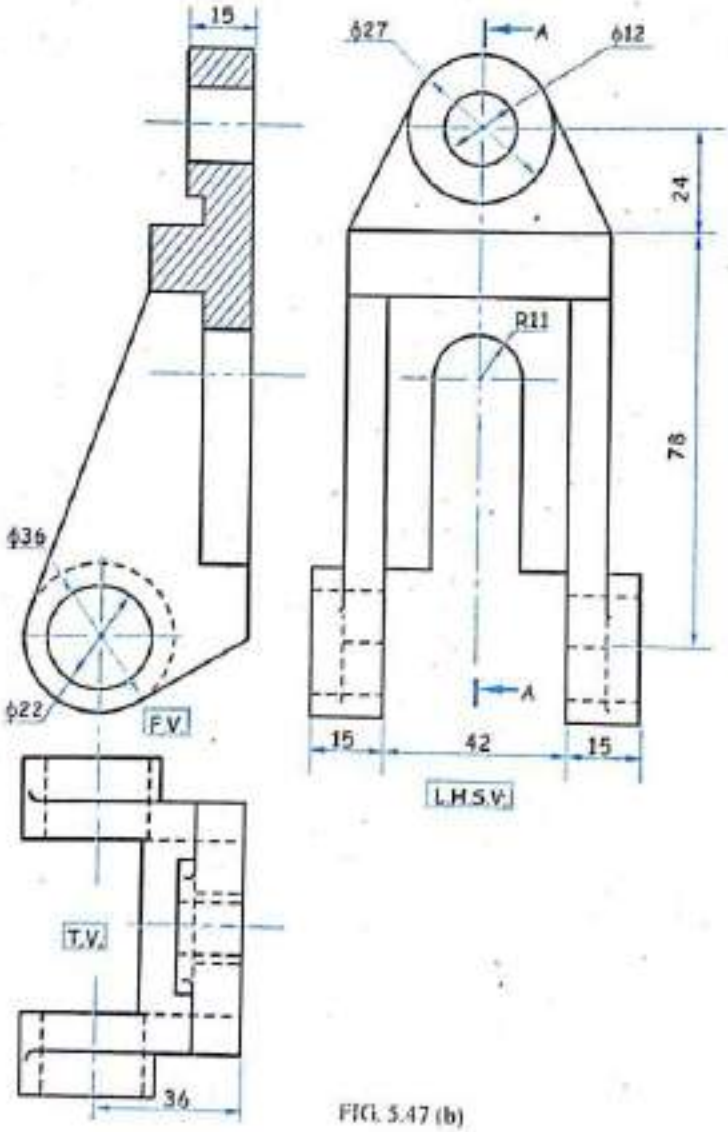

FIG. 5.47 (b)

Scanned by CamScanner

Problem 35

Figure 5.48 (a) shows the pictorial view of a machine part. Draw using full scale.

(a) Sectional front view along *A-A*.

(b) Top view.

(c) Left hand side view.

(Dec. '08, M.U.)

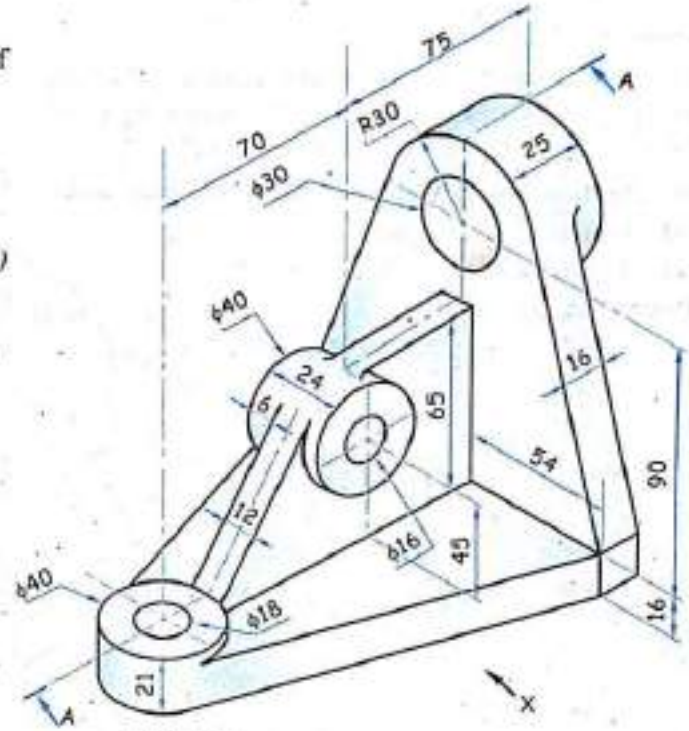

FIG. 5.48 (a)

Solution : *Refer figure 5.48 (b).*

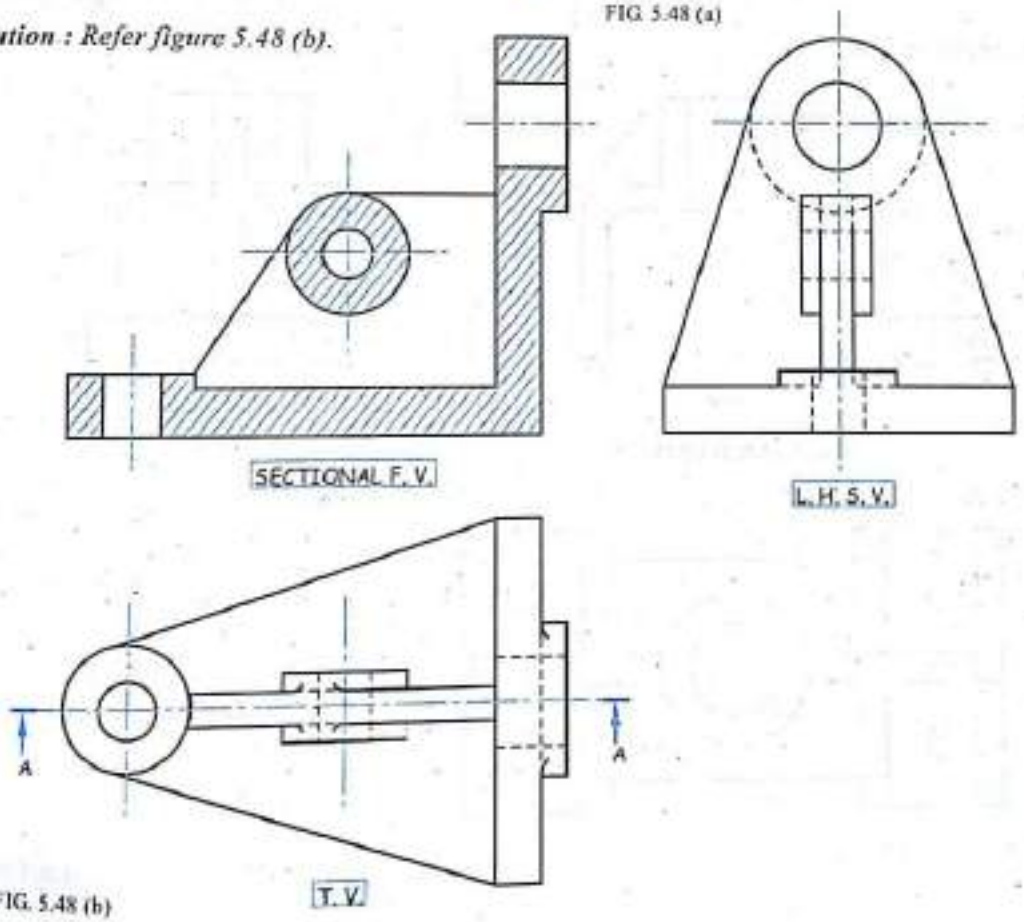

FIG. 5.48 (b)

Scanned by CamScanner

Problem 36

Figure 5.49 (a) shows a pictorial view of a Spindle Bearing. Draw to scale full size, the following views by using first angle method of projection :

(a) Sectional front view along section plane *A-A*.

(b) Left hand side view.

(c) Top view.

Dimension the views.

(May '09, Dec. '09, M.U.)

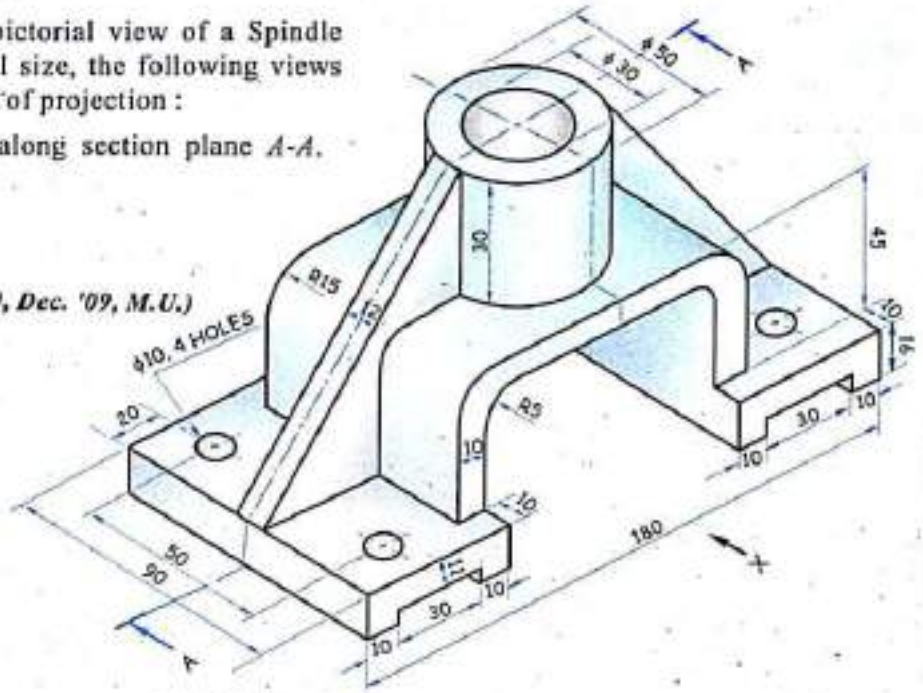

FIG. 5.49 (a)

Solution : *Refer figure 5.49 (b).*

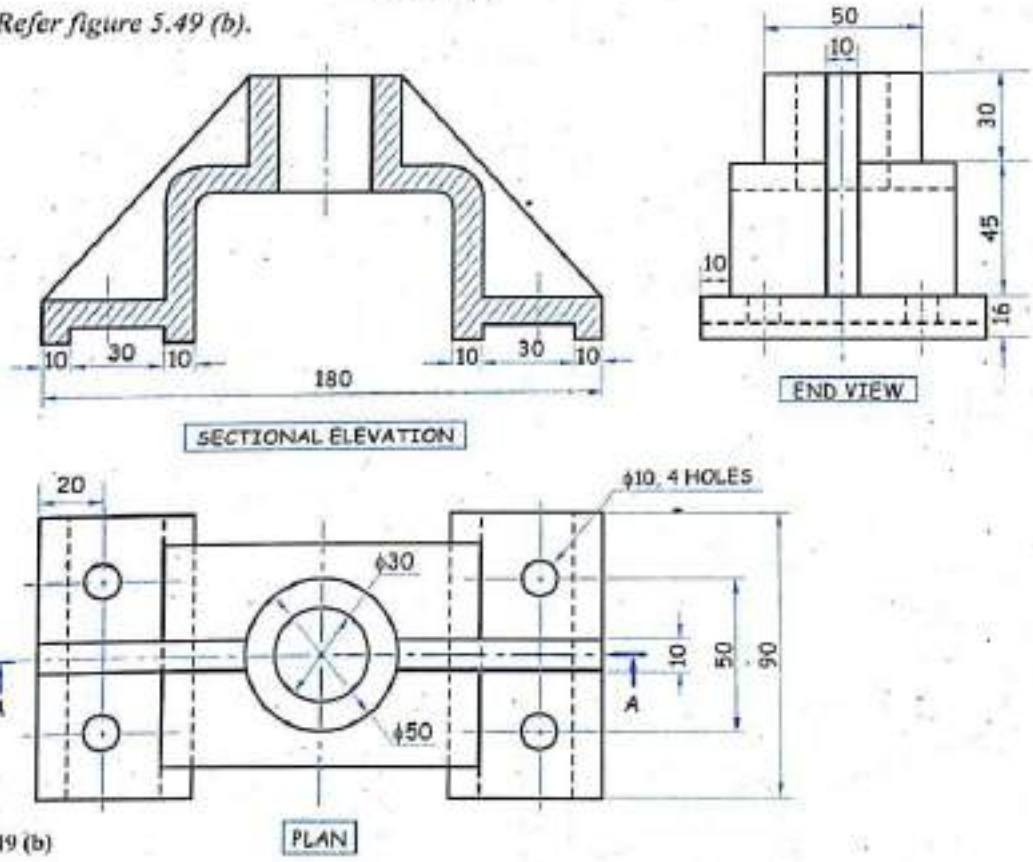

FIG. 5.49 (b)

Scanned by CamScanner

Problem 37

Figure 5.50 (a) shows a pictorial view of an object.

Draw following views :

(a) Sectional F.V. along section *A-A*.

(b) T.V.

(c) L.H.S.V.

Insert at least ten major dimensions.

(May '10, M.U.)

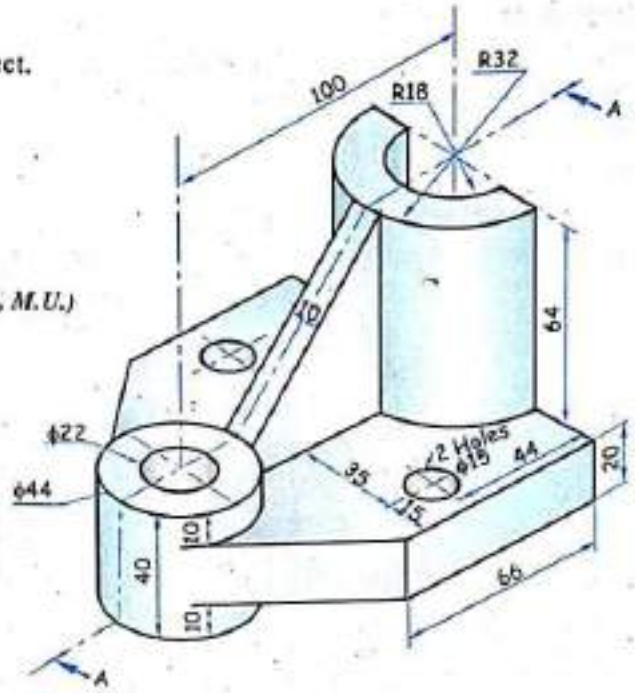

FIG. 5.50 (a)

Solution : *Refer figure 5.50 (b).*

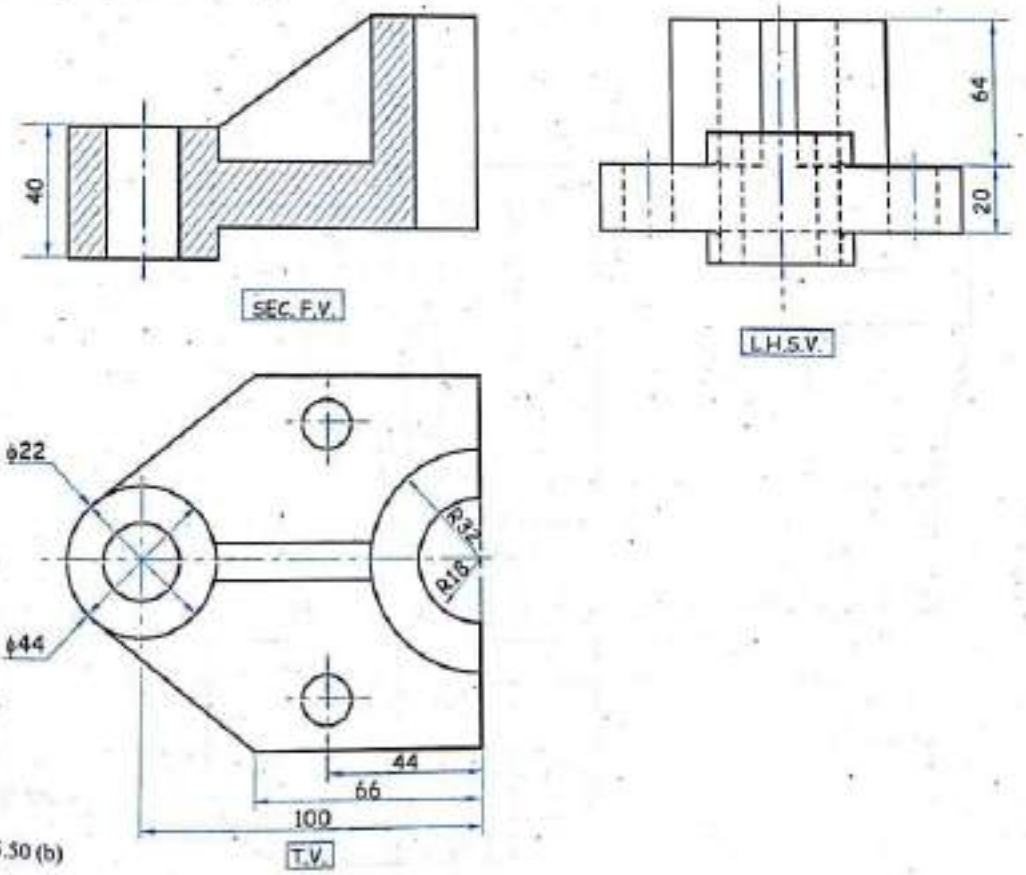

FIG. 5.50 (b)

Scanned by CamScanner

Problem 38

Figure 5.51 (a) shows a pictorial view of an object. Draw the following views :

(a) Front view along arrow *X*.

(b) Top view.

(c) Sectional side view along *P-Q*.

Insert at least 8 major dimensions.

(Dec. '11, M.U.)

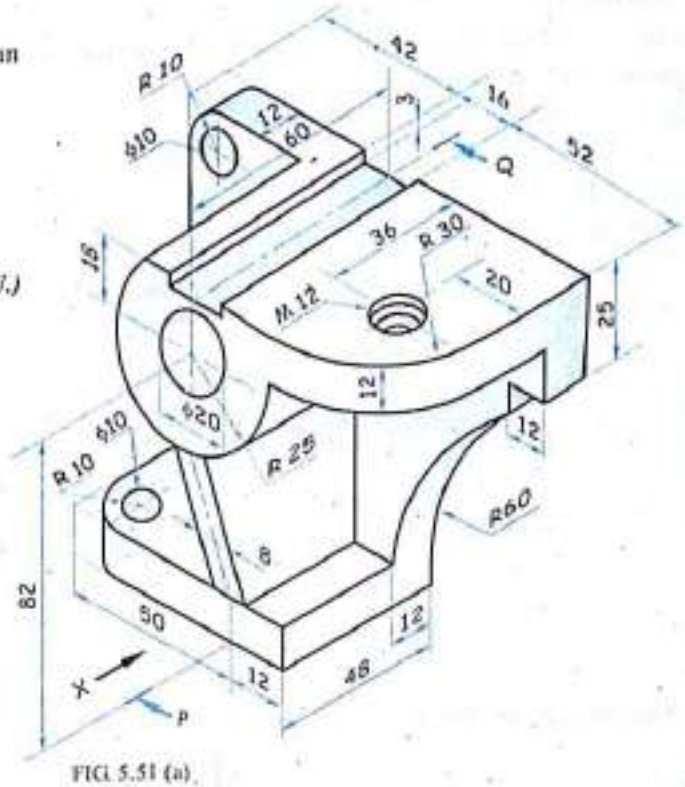

FIG. 5.51 (a)

Solution : *Refer figure 5.51 (b).*

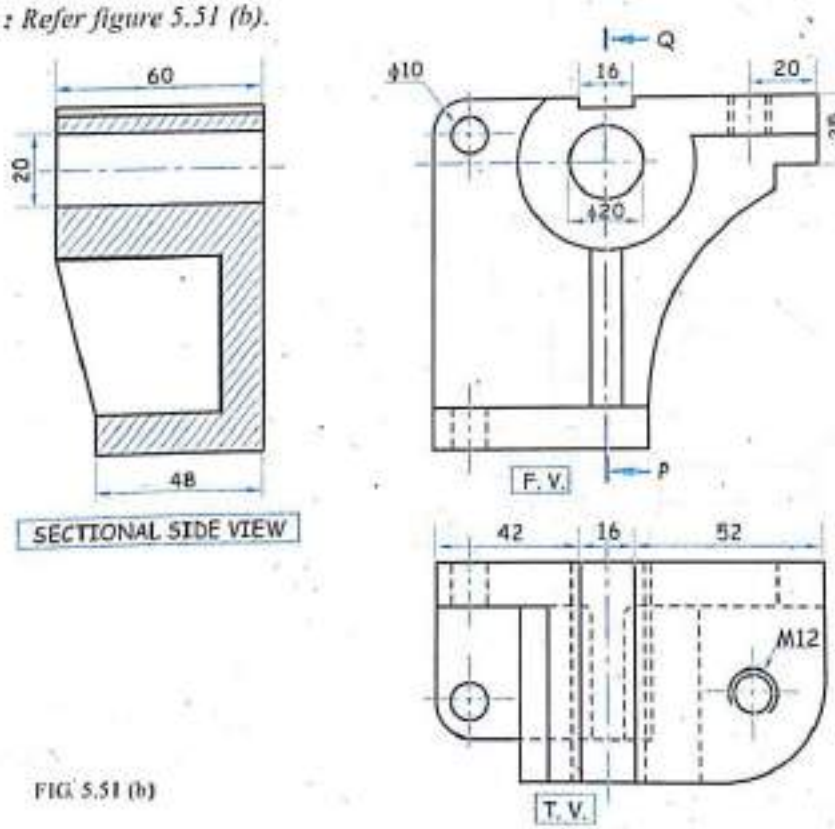

FIG. 5.51 (b)

Scanned by CamScanner

5.5 Exercise

Problem 1

Figure 5.52 shows a pictorial view of a Bracket. Draw to scale full size, the following views by using first angle method of projection :

(a) Elevation in the direction of an arrow *X*.

(b) Plan.

(c) Sectional end view in the direction of an arrow *B*. Section along *A-A*.

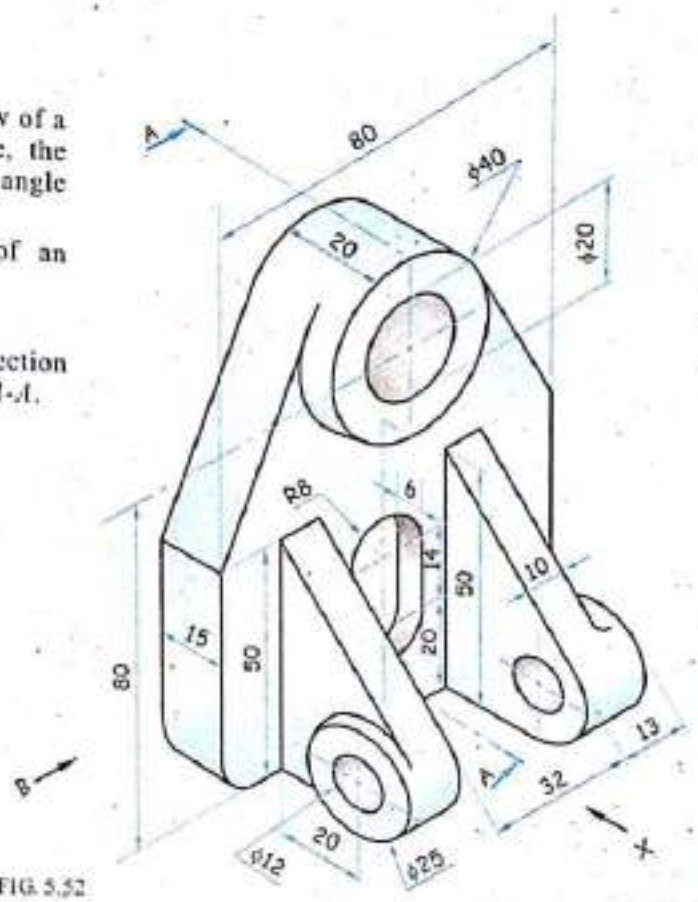

FIG. 5.52

Problem 2

Figure 5.53 shows a pictorial view of a C.I. Bearer. Draw to scale full size, the following views by using first angle method of projection :

(a) Front view in the direction of an arrow *X*.

(b) Left hand side view.

(c) Top view.

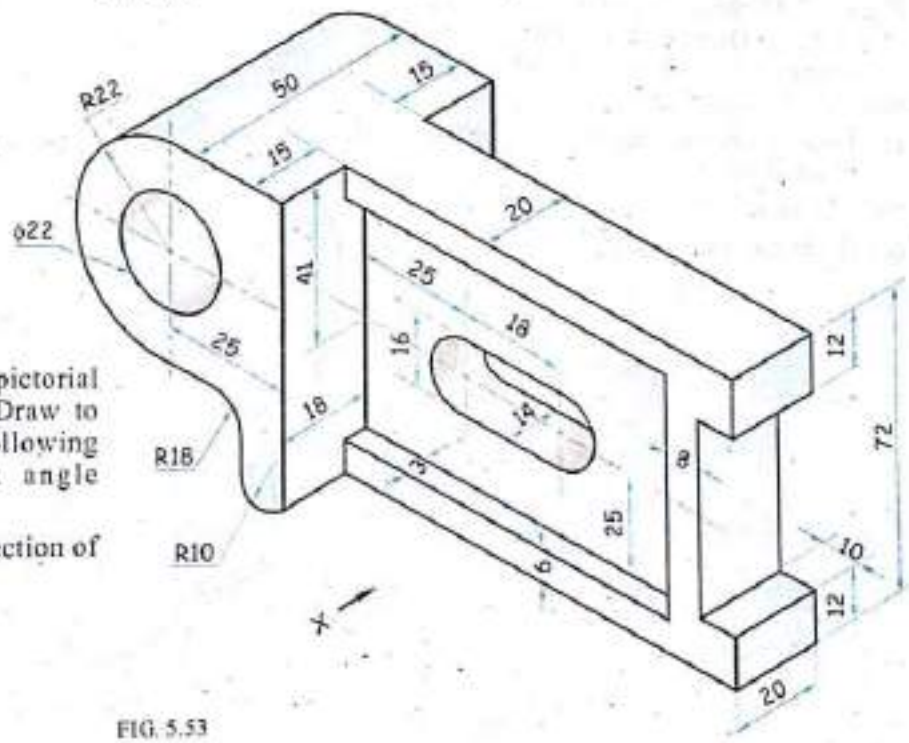

FIG. 5.53

Scanned by CamScanner

Problem 3

Figure 5.54 shows a pictorial view of a Slit Guide. Draw to scale full size, the following views by using first angle method of projection :

(a) Sectional front view in the direction of an arrow *X*. (Section on *A-A*.)

(b) Left hand side view in the direction of an arrow *Y*.

(c) Top view.

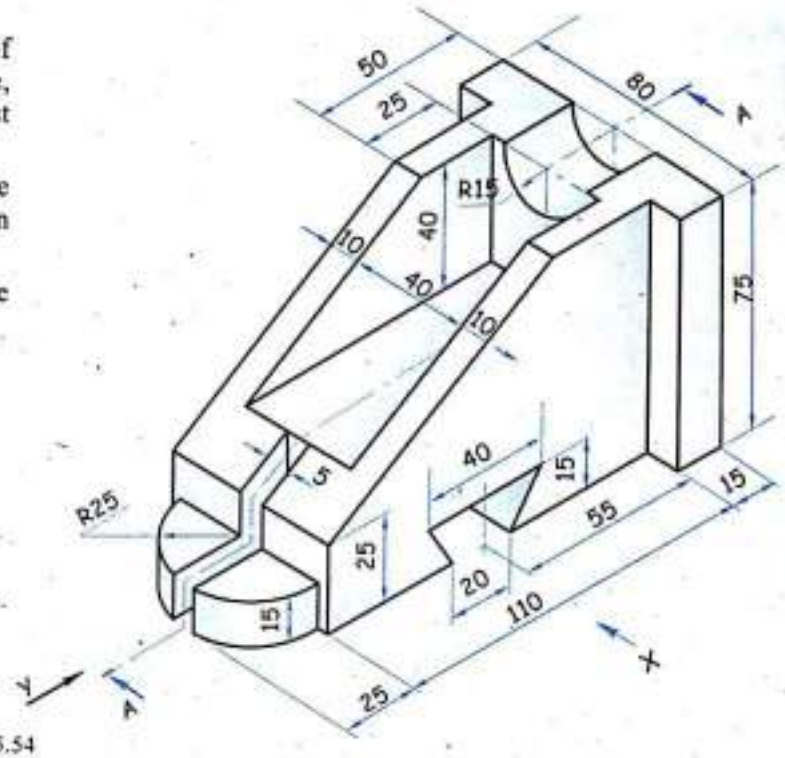

FIG. 5.54

Problem 4

Figure 5.55 shows a pictorial view of a Depth Stop. Draw to scale full size, the following views by using first angle method of projection :

(a) Front view, looking in the direction of an arrow *A*.

(b) Top view.

(c) Right hand side view.

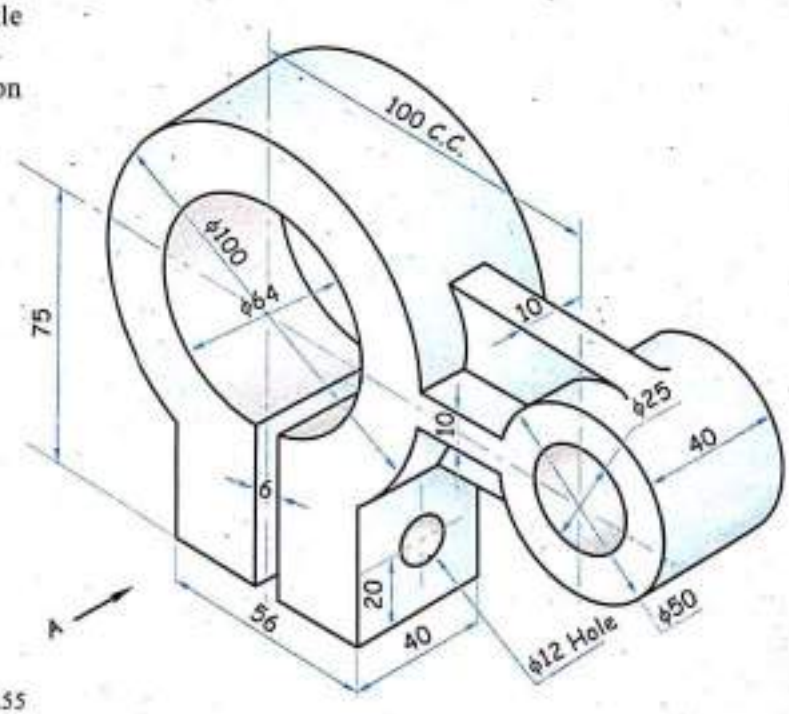

FIG. 5.55

Scanned by CamScanner

Problem 5

Figure 5.56 shows a pictorial view of a Machine Bracket. Draw to scale full size, the following views by using first angle method of projection :

(a) Sectional elevation along *A-A* (in the direction of an arrow *X*).

(b) End view in the direction of an arrow *Y*.

(c) Plan.

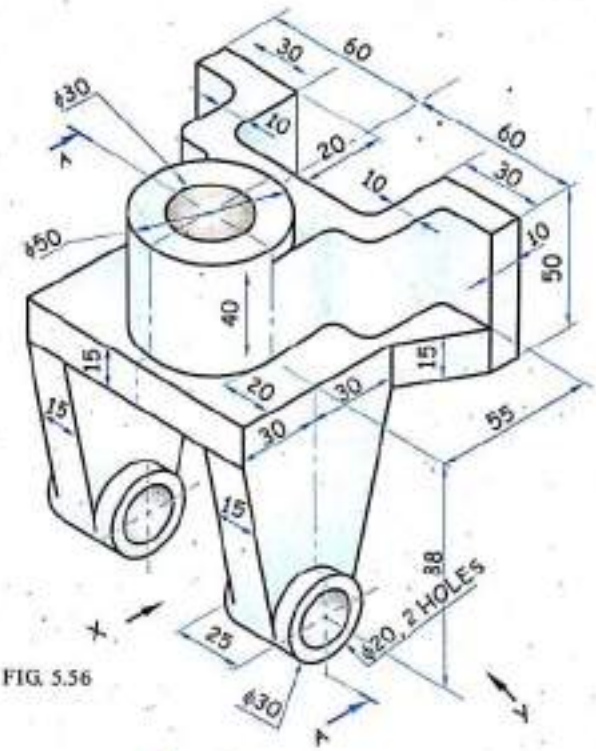

FIG. 5.56

Problem 6

Figure 5.57 shows a pictorial view of a C. I. Bracket. Draw to scale full size, the following views by using first angle method of projection :

(a) An elevation looking in the direction of an arrow *X*.

(b) Sectional end view along *A-B*, looking in the direction of an arrow *Y*.

(c) Plan.

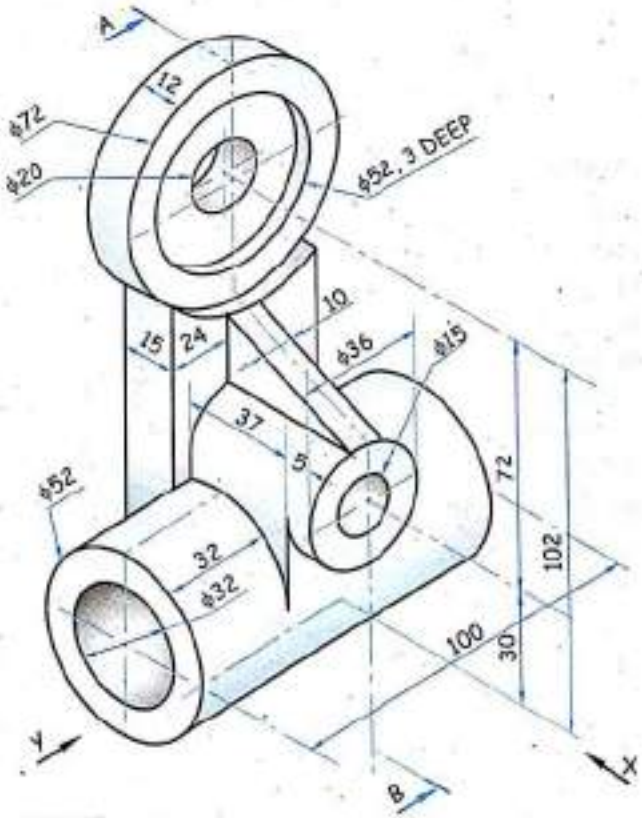

FIG. 5.57

Scanned by CamScanner

Problem 7

Figure 5.58 shows a pictorial view of a Bracket. Draw to scale full size, the following views by using first angle method of projection :

(a) Front view in the direction of an arrow *X*. (Section *A-A*.)

(b) Top view.

(c) Sectional side view from right. (Section *A-A*.)

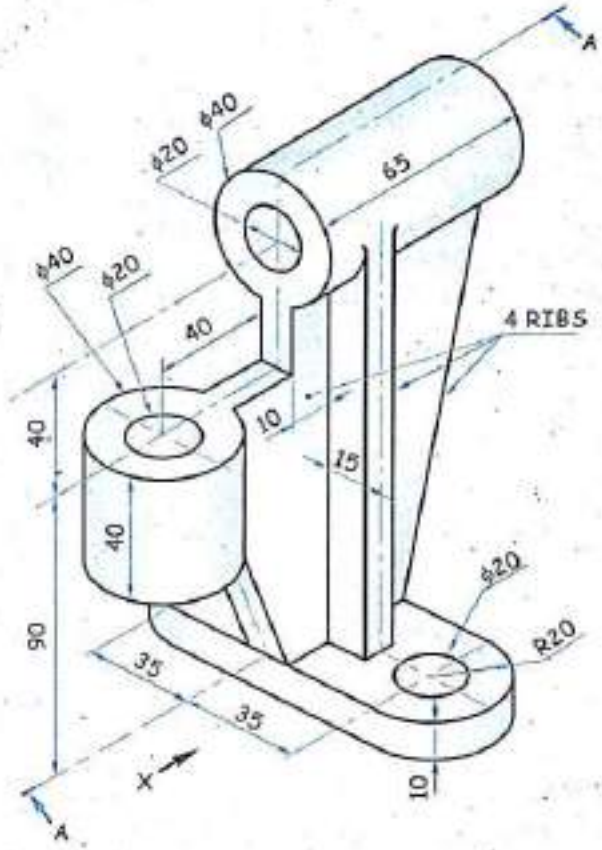

FIG. 5.58

Problem 8

Figure 5.59 shows a pictorial view of an Object. Draw to scale full size, the following views by using first angle method of projection :

(a) An elevation in the direction of an arrow *A*.

(b) Plan.

(c) End view in the direction of arrow *C*.

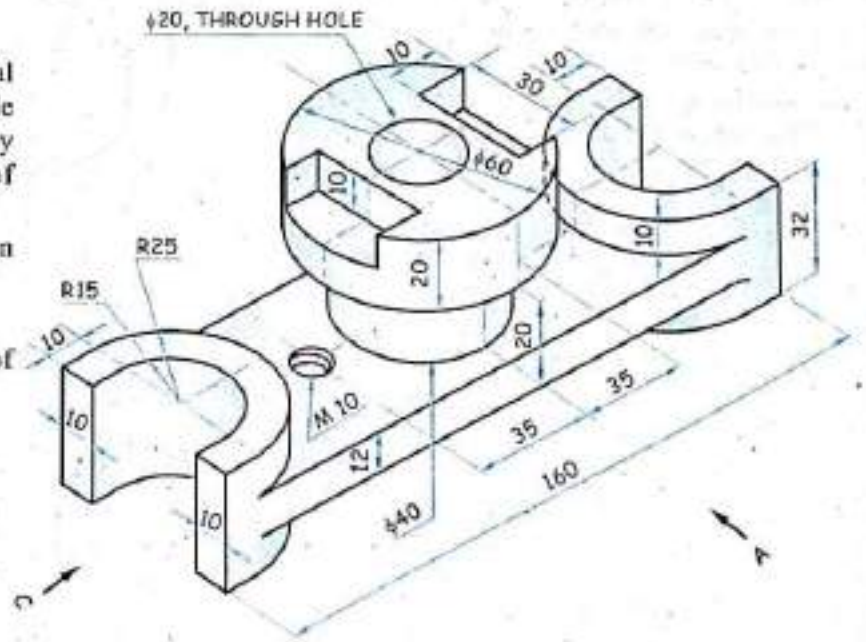

FIG. 5.59

Scanned by CamScanner

Problem 9

Figure 5.60 shows a pictorial view of a Slotted Bracket. Draw to scale full size, the following views by using first angle method of projection :

(a) Front view in the direction of an arrow *A*.

(b) Sectional side view along *A-B*, looking in the direction of arrow *Y*.

(c) Top view.

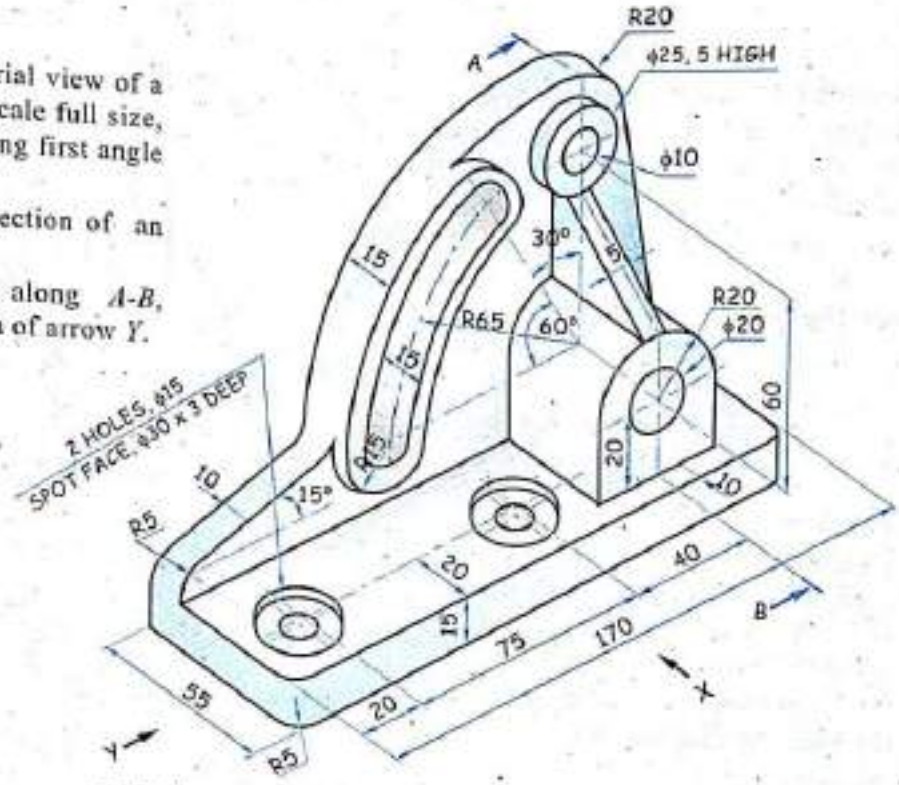

FIG. 5.60

Problem 10

Figure 5.61 shows a pictorial view of an Object. Draw the following views by using first angle method of projection :

(a) Sectional front view in the direction *X* and on section *AA*.

(b) Top view.

(c) Left hand side view.

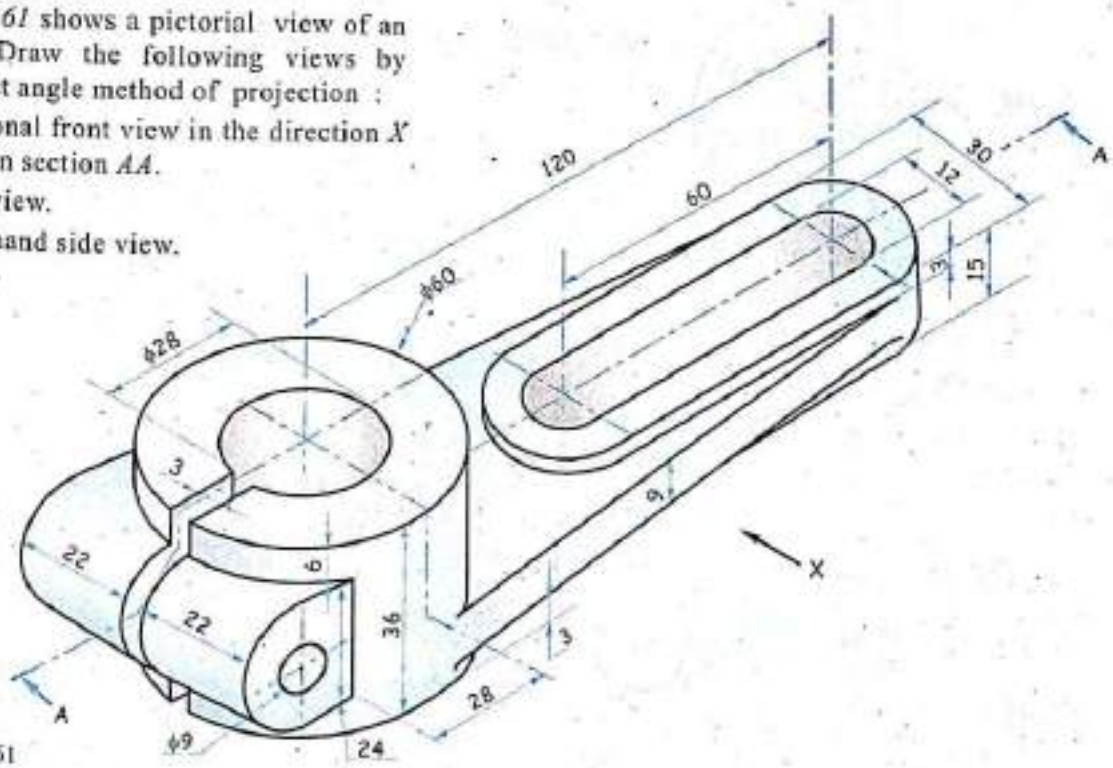

FIG. 5.61

Scanned by CamScanner

Problem 11

Figure 5.62 shows a pictorial view of an Object. Draw the following views by using first angle method of projection :

(a) Front view along direction *X*.

(b) Sectional view from left hand side along *AA*.

(c) Top view.

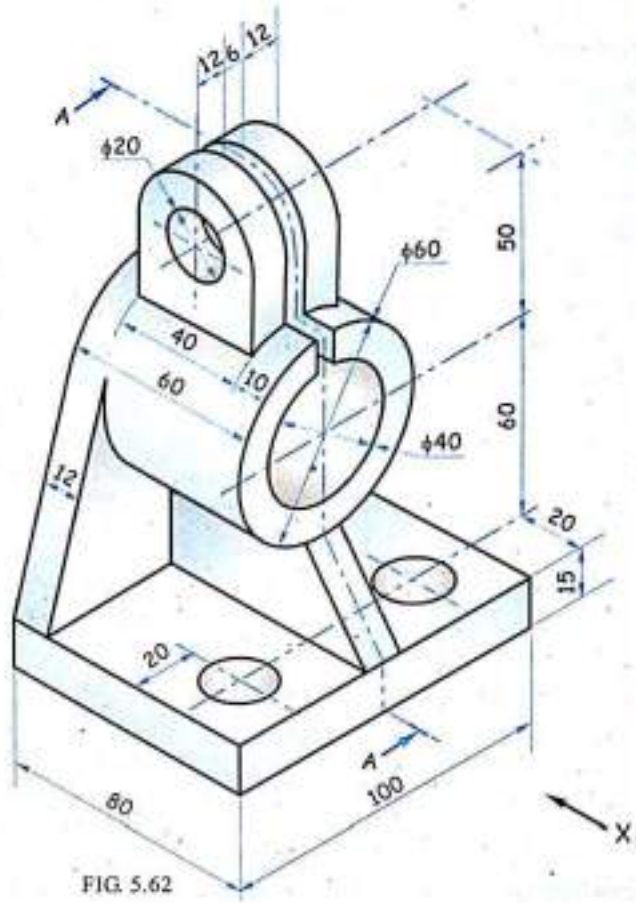

FIG. 5.62

Problem 12

Figure 5.63 shows a pictorial view of an Object. Draw the following views by using first angle method of projection :

(a) Front view in the direction *X*.

(b) Side sectional view.

(c) Top view.

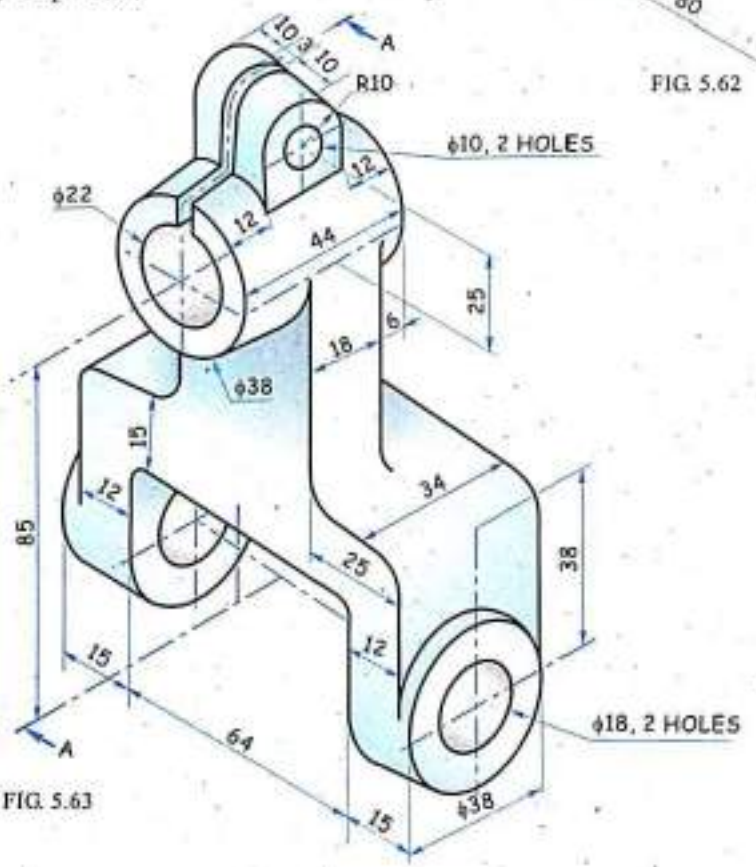

FIG. 5.63

Scanned by CamScanner

Problem 13

Figure 5.64 shows a pictorial view of an Object. Draw the following views :

(a) Front view in the direction *Y*.

(b) Sectional side view in *X* direction.

(c) Top view.

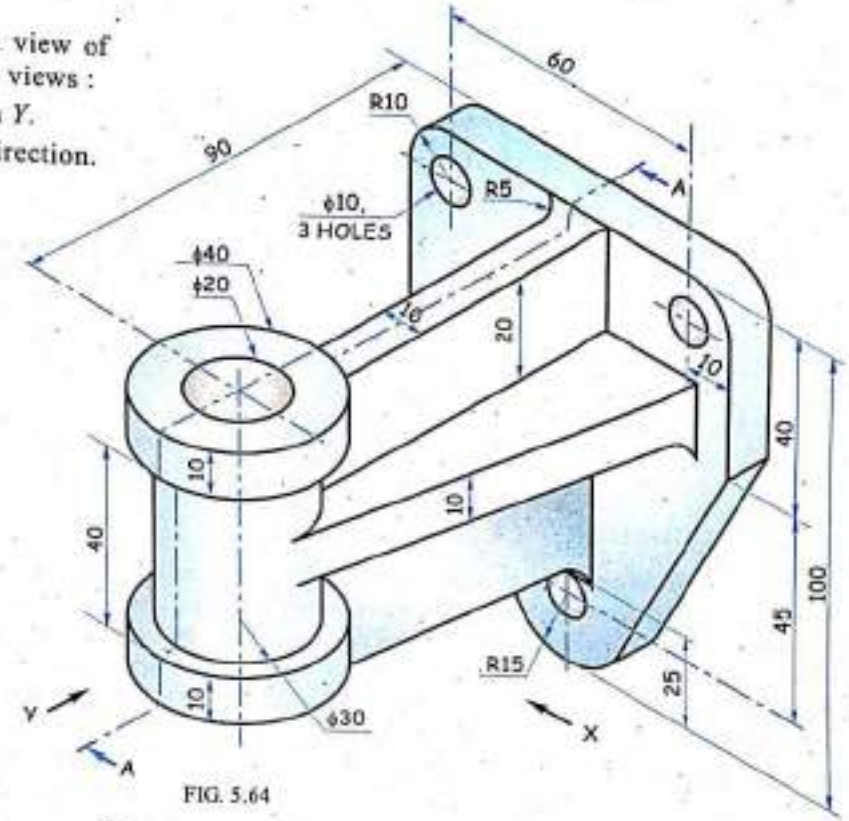

FIG. 5.64

Problem 14

For the object shown in *figure 5.65* draw the following views :

(a) Sectional front view in the direction *X*.

(b) Right hand side view.

(c) Top view.

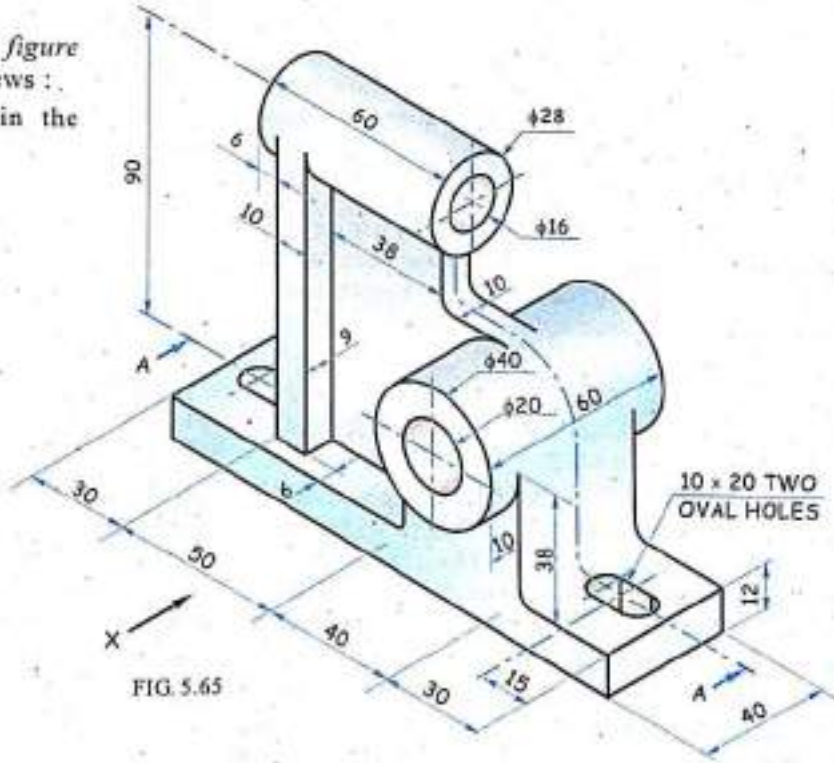

FIG. 5.65

Scanned by CamScanner

6 ISOMETRIC PROJECTIONS

6.1 Introduction

In the orthographic projection, two or more number of principal views are shown. The orthographic projection of an object are given in exact dimension but any of the views shows only two dimensions. However, to visualise the complete shape of an object (i.e. pictorial drawing) we need a thorough knowledge of graphic representation on principal planes, and then only we can conclude and imagine the shape and form of an object. In pictorial drawing one can see the three dimensions (length, breadth and height) of an object.

Some part of an object which is not clear in the orthographic projection can be visualised in pictorial drawing. Pictorial drawing is used extensively for catalogs, piping diagrams, furniture design method of assembling and disassembling in maintenance, manuals etc.

Pictorial diagrams have many advantages but they have some drawbacks that limit their use. Pictorial drawing takes longer time as compared to orthographic drawing and it is difficult to sketch and dimension. Generally we cannot measure the inclined line to the scale.

6.2 Types of Pictorial Drawing

The three types of pictorial drawing are Axonometric projection, Oblique projection and Prespective projection. (Perspective projection are out of syllabus hence not discussed.)

Axonometric Projection

The *figure 6.1* shows an axonometric projection of a cube projected on a plane of projection.

Any objects can be placed in different positions with respect to principal plane for drawing its orthographic projections. Theoretically, axonometric projection is a form of orthographic projections. For practical purposes, a few of these important positions have been classified so as to display the three faces which will vary in general proportion. Axonometric projection is of three types.

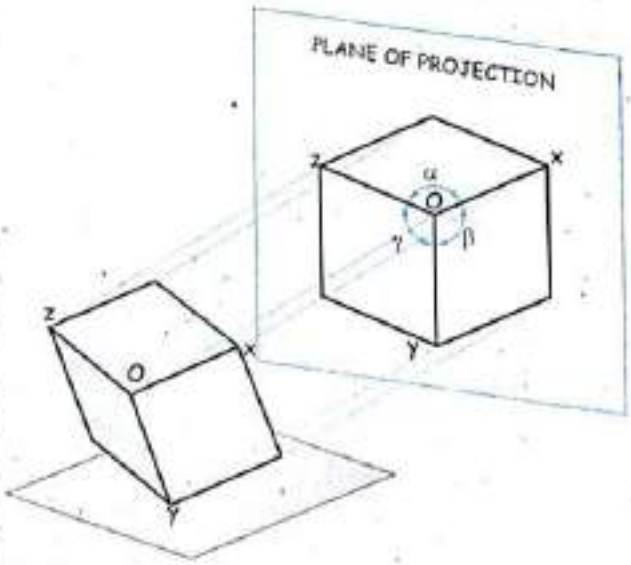

FIG 6.1

Scanned by CamScanner

6.3 Types of Axonometric Projection

(1) Isometric projection. (2) Dimetric projection. (3) Trimetric projection.

(1) Isometric Projection

Refer figure 6.2 (a).

If the mutually perpendicular edges of a cube make equal inclination with the plane of projection, then the projected edges in the axonometric view will be foreshortened to the same length (i.e. $OX = OY = OZ$) and also the axonometric angles between them will be equal. (i.e. $\angle\alpha = \angle\beta = \angle\gamma$). The obtained axonometric projection is called *Isometric Projection*.

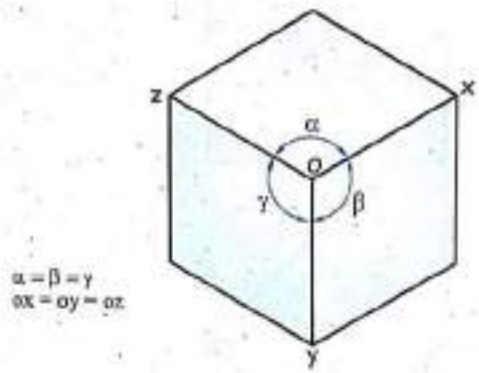

FIG. 6.2 (a)

(2) Dimetric Projection

Refer figure 6.2 (b).

If out of three, only two mutually perpendicular edges of a cube make equal inclination with the plane of projection, then the corresponding two edges in the axonometric view will be foreshortened to the same length (i.e. $OX = OY$) and also the corresponding axonometric angles between them will be equal (i.e. $\angle\alpha = \angle\beta$). The obtained axonometric projection is called *Dimetric Projection*.

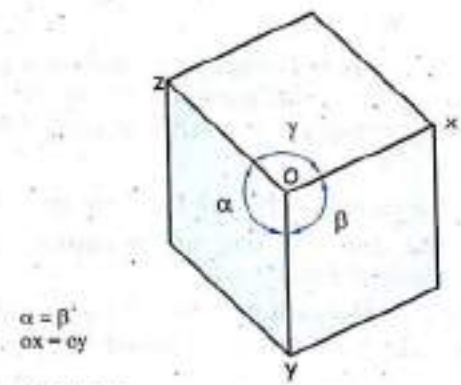

FIG. 6.2 (b)

(3) Trimetric Projection

Refer figure 6.2 (c).

If none of the mutually perpendicular edges of cube makes equal inclination with the plane of projection, then none of the projected edges in the axonometric view will be equal (i.e. $OX \neq OY \neq OZ$) and also none of the axonometric angles between them will be equal (i.e. $\angle\alpha \neq \angle\beta \neq \angle\gamma$). The obtained axonometric projection is called *Trimetric Projection*.

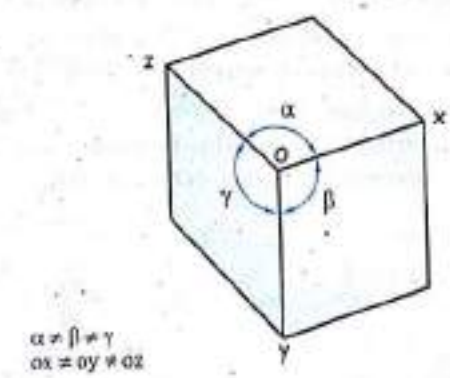

FIG. 6.2 (c)

Scanned by CamScanner

6.4 Orthographic Isometric Projection of Cube

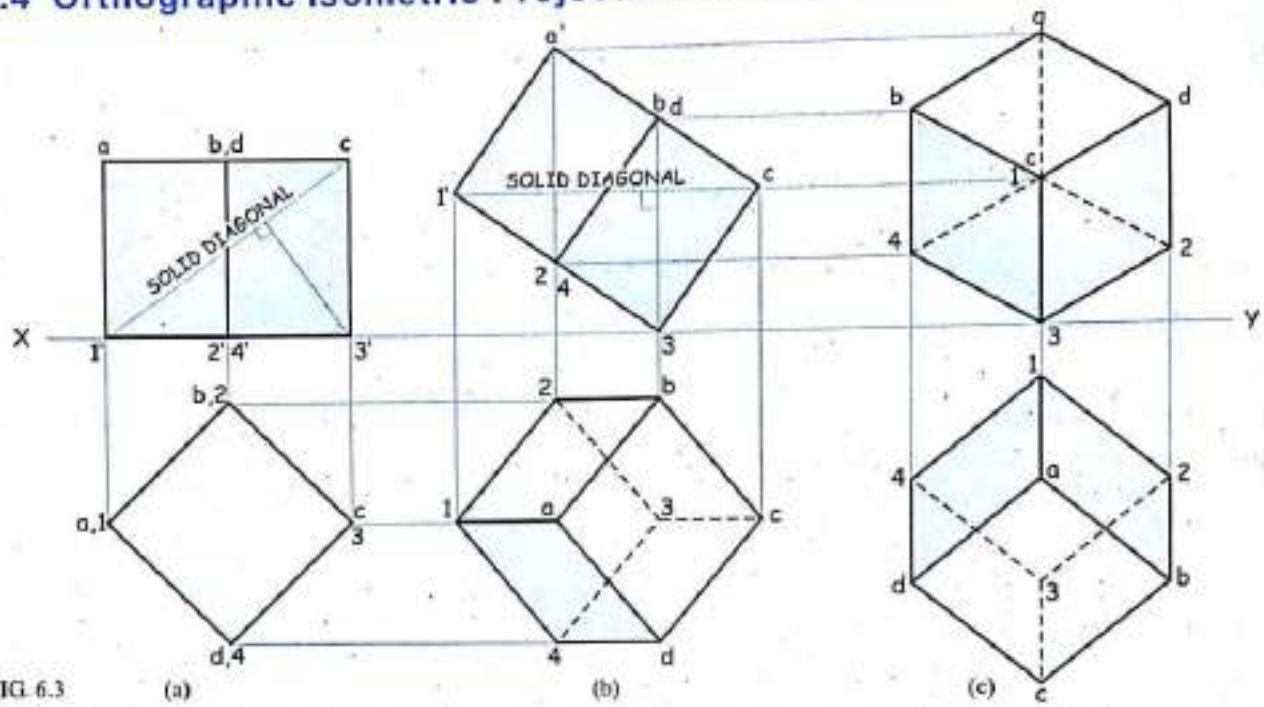

FIG. 6.3

To obtain the required condition of isometric projection i.e. three mutually perpendicular edges of a cube making equal inclination with the V.P., draw the projection of cube such that the solid diagonal is perpendicular to V.P. and parallel to H.P.

Solution

1. Place the cube in H.P. with faces equally inclined 45^0 to the V.P. *Refer figure 6.3 (a).*
2. Turn the cube at one of its corners such that solid diagonal becomes parallel to the H.P. *Refer figure 6.3 (b).*
3. Rotate the cube such that the solid diagonal *(1-c)* becomes perpendicular to the V.P. *Refer figure 6.3 (c).* The F.V. of the cube represents its Isometric Projections.

6.5 Isometric Length

All the three visible square faces of a cube are foreshortened and it appears as a Rhombus.

To find the foreshortened length of edges in isometric projections draw a square AB_1CD_1, of sides equal to the true (actual) length of the edges of the cube with AC as the common diagonal.

AB is foreshortened length of side AB_1, (True length).
We can calculate the AB the foreshortened length by considering the two triangles AOB and AOB_1.

$$\angle B_1AO = 45^0 \qquad \angle BAO = 30^0$$

$$\cos 45^0 = \frac{AO}{AB_1} = \frac{1}{\sqrt{2}} \quad \text{and} \quad \cos 30^0 = \frac{AO}{AB} = \frac{\sqrt{3}}{2}$$

$$\therefore \frac{AB}{AB_1} = \frac{2}{\sqrt{3}} \times \frac{1}{\sqrt{2}} = \sqrt{\frac{2}{3}} \cong 0.816 = \frac{9}{11} \text{ (approximately)}$$

$$\frac{AB}{AB_1} = \frac{\text{Isometric length}}{\text{True length}} = 0.816$$

$$\therefore \text{Isometric length} = 0.816 \times \text{True length}$$

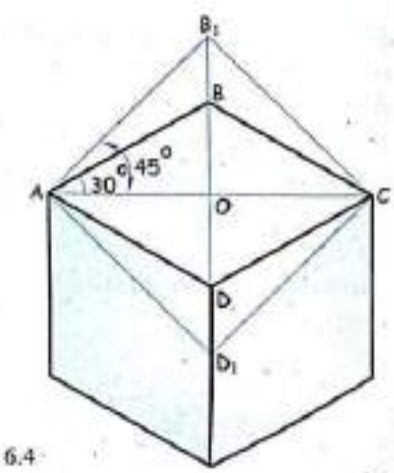

FIG. 6.4

Scanned by CamScanner

Construction of Isometric Scale

Refer figure 6.5.

1. Draw a horizontal line AO.
2. Draw a line AB_1 at 45^0 from A to represent actual (true) scale and another line AB at 30^0 to measure isometric scale.
3. On AB_1 mark the points, *10, 20, ...* to represent actual (true) scale.
4. From each points draw vertical lines and mark *10', 20',...* to represent corresponding scale where it intersects AB.
5. The scale obtained on AB is isometric scale.

***Note :** Actual scale = True scale = Natural scale.*

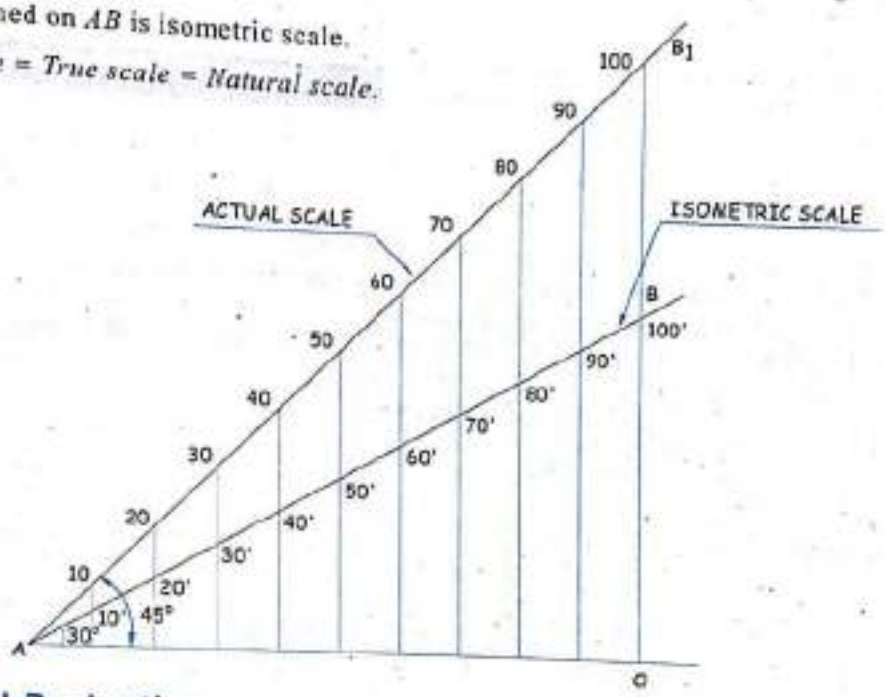

FIG. 6.5

6.6 Isonomial Projection

The use of isometric scale being inconvenient and impractical, objects are more often drawn to the actual scale in isometric drawing. Isometric views drawn to the actual scale will be larger (approximately 22.5%) in proportion than these obtained by the use of isometric scale. But it does not affect the pictorial value of the representation. Such proportions are called *Isonomial Projections.* (Isometric view or isometric drawing).

Hence isometric projection is drawn by isometric scale and isometric view or isometric drawing is drawn by actual scale.

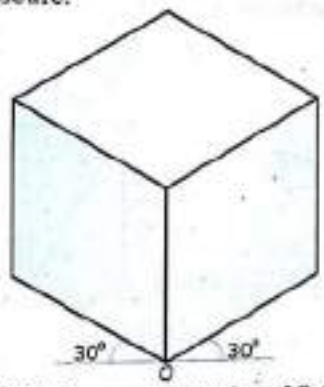

FIG. 6.6 (a) Isonomial Drawing of Cube

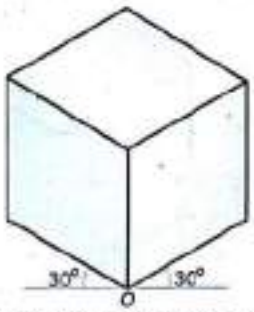

FIG. 6.6 (b) Isometric Projection of Cube

Scanned by CamScanner

6.7 Isometric Axes, Lines and Planes

Isometric Axes

Refer figure 6.7 (a).

The three mutually perpendicular edges of the cube, *OX, OY* and *OZ* are foreshortened equally and are at equal inclination of 120° to each other and are called *Isometric Axes*.

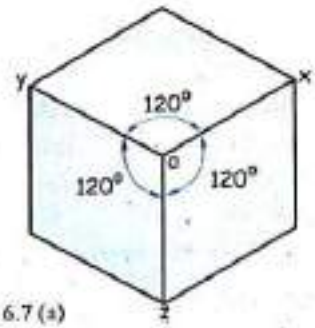

FIG. 6.7 (a)

Isometric Lines

Refer figure 6.7 (b).

The lines which are parallel to isometric axes are called *Isometric Lines*. We can mark or measure the true dimension on these lines.

Non Isometric Lines

Refer figure 6.7 (c).

The lines which are not parallel to isometric axes are called *Non Isometric Lines*. The lines *XY, YZ* and *XZ* are non-isometric lines. Since the non-isometric lines are not parallel to the isometric axes, they are not foreshortened in the same projection as the isometric lines. So we can not mark or measure true dimension on these lines. To draw non-isometric lines their ends should be located and then joined.

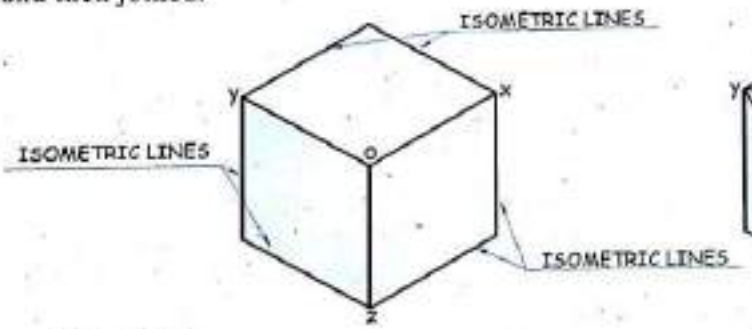

FIG. 6.7 (b)

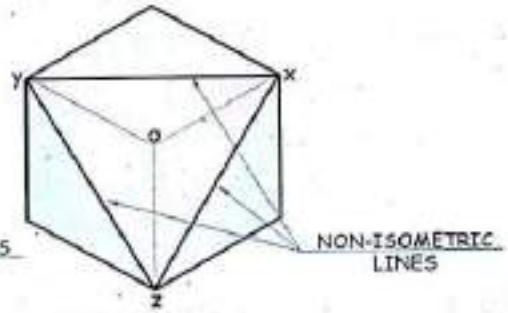

FIG. 6.7 (c)

Isometric Plane

Refer figure 6.7 (d).

The plane formed by isometric lines are called isometric planes.

Non Isometric Plane

Refer figure 6.7 (e).

The plane formed by non-isometric lines are called non isometric plane (oblique plane).

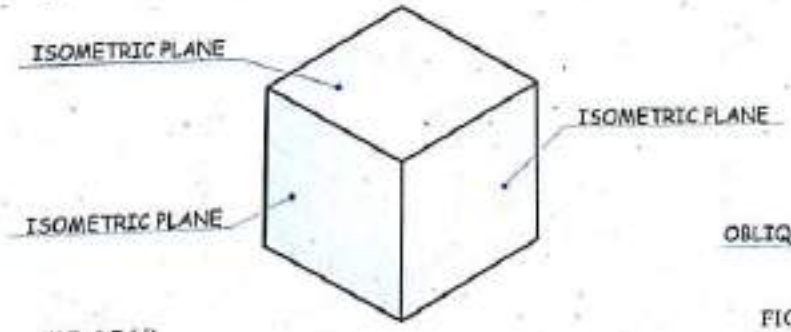

FIG. 6.7 (d)

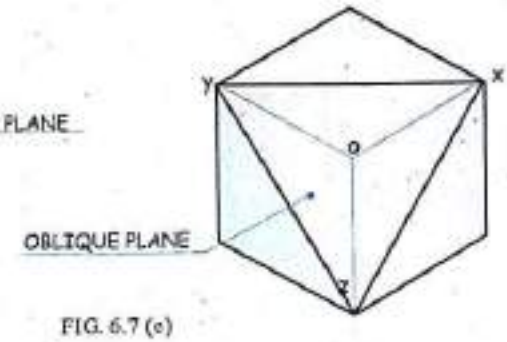

FIG. 6.7 (e)

Scanned by CamScanner

6.8 Construction of Isometric Point

Locating an isometric point is the first stage in understanding isometric projection because the surface of an object is generated by planes and plane is generated by lines and each line is generated by points.

Orthographic project of point '*A*' is given. *Refer figure 6.8.*

Construct the coordinate axes $O'X'$, $O'Y'$, $O'Z'$ at 120^0 with each other. From O' take x along $O'X'$ axis then move by y parallel to $O'Y'$ and then move by z parallel to $O'Z'$ up. Thus the point '*A*' is obtained in isometric projection.

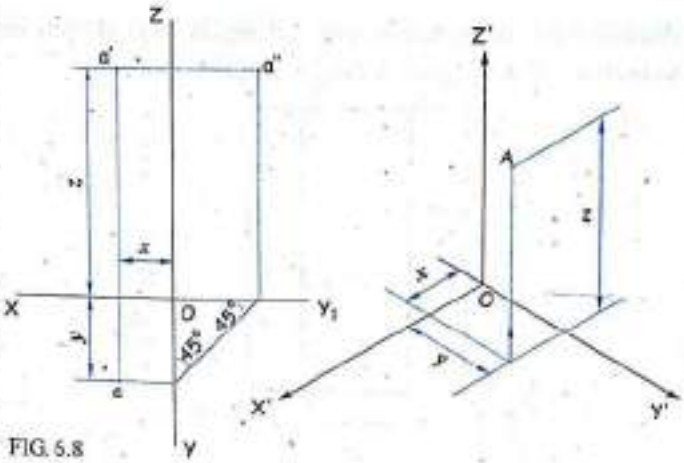

FIG. 6.8

6.9 Construction of Isometric Plane

Problem 1 : Draw the isometric view of a regular hexagonal lamina of 20 mm side with different orientation.

Solution : *Refer figure 6.9 (a), (b), (c) and (d).*

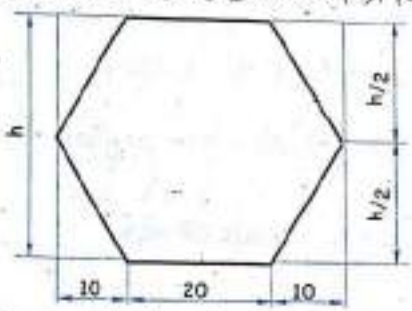

Figure to be placed in different isometric planes.

FIG. 6.9 (a)

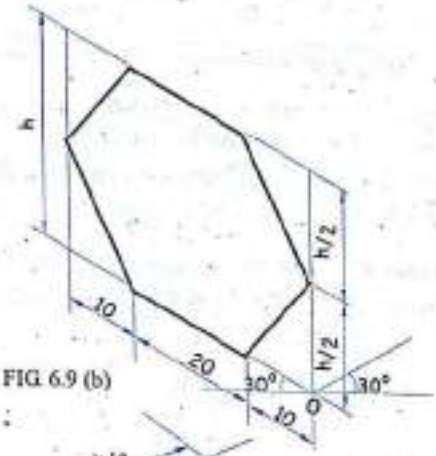

FIG. 6.9 (b)

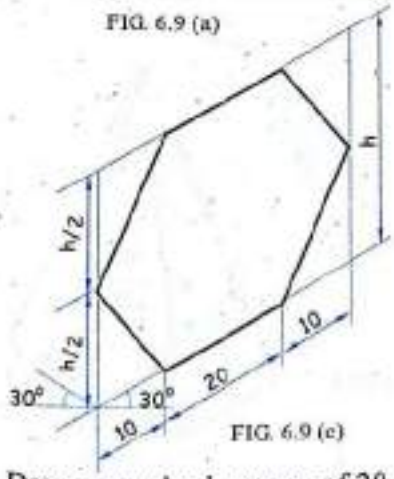

FIG. 6.9 (c)

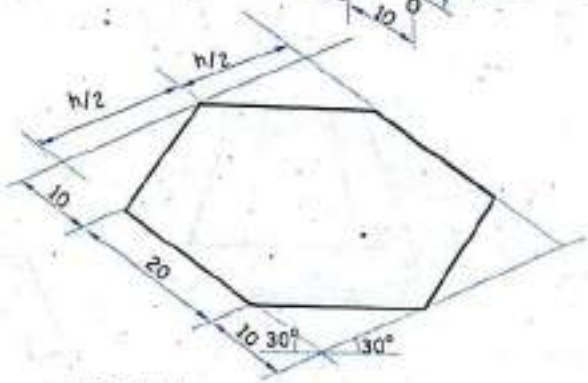

FIG. 6.9 (d)

1. Draw a regular hexagon of 20 mm sides as shown in *figure 6.9* and enclose it in a rectangle.
2. Draw the isometric plane of the rectangle and transfer the distance of each of the corners of hexagon as measured.
3. Join these points to obtain isometric hexagon as shown.

The F.V. of the cube represents its Isometric Projections.

Scanned by CamScanner

6.10 Construction of Isometric Solid

Problem 2 : Draw the hexagonal prism with side of base 20 mm and axis length 50 mm.

Solution : *Refer figure 6.10 (a) and (b).*

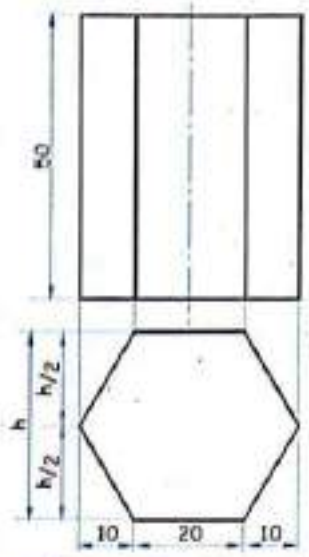

FIG. 6.10 (a)

Orthographic Projection of Hexagonal Prism

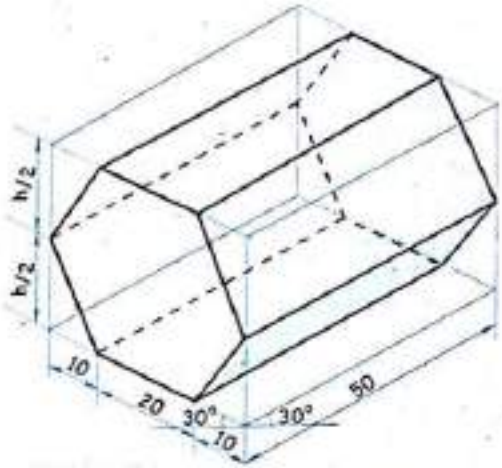

FIG. 6.10 (b)

Isometric Projection of Hexagonal Prism

To draw isometric of hexagonal prism we may construct the rectangular crate (BOX) with size 40 × h × 50 with isometric lines.

Locate the points of hexagon on isometric plane. Draw the hexagon shift the points by length 50 and draw the object lines for visible part only.

Problem 3 : Draw the hexagonal pyramid with side of base 20 mm and axis height 50 mm.

Solution : *Refer figure 6.11 (a), (b) and (c).*

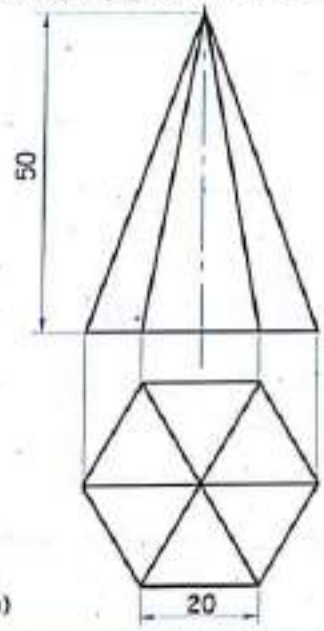

FIG. 6.11 (a)

Orthographic Projection of Hexagonal Pyramid

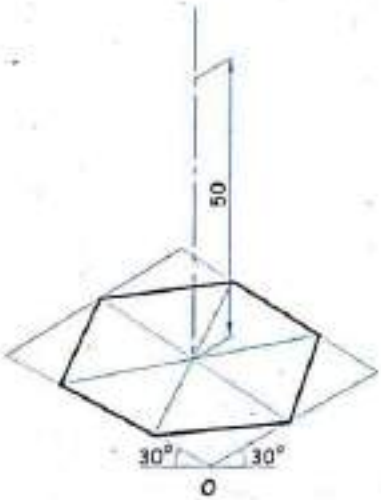

FIG. 6.11 (b)

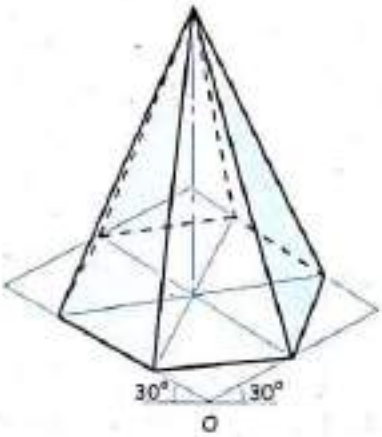

FIG. 6.11 (c)

Isometric Projection of Hexagonal Pyramid

Scanned by CamScanner

6.11 Isometric Projection of a Circle.

As square faces of cube gets foreshortened and appear to be rhombus; similarly the circle drawn on isometric plane appears to be an ellipse.

[A] Construction of Isometric Circle by Four Centre Method

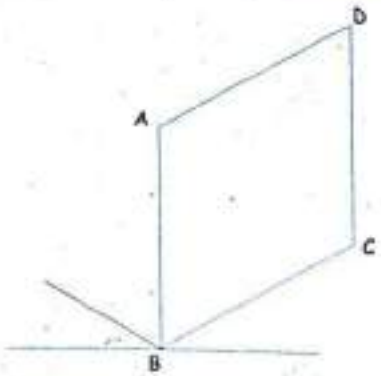

FIG. 6.12 (a)

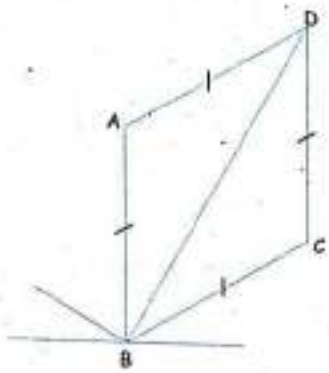

FIG. 6.12 (b)

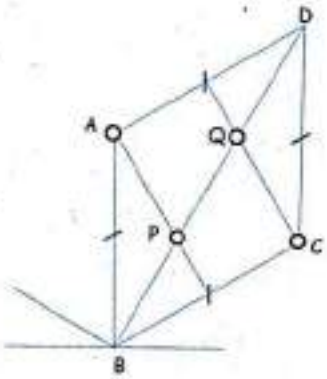

FIG. 6.12 (c)

1. Construct the isometric projection of square plane (i.e. rhombus) with sides equal to diameter of a circle.
2. Mark the mid point of all the sides of rhombus and draw the thin construction line for longest diagonal *BD*.
3. From corners of shortest diagonal *AC* joint the thin construction line to opposite sides mid point. The intersection of these lines with longest diagonal gives two centres, *(P and Q)*.

   The other two centres are corners of shortest diagonal *(A and C)*.

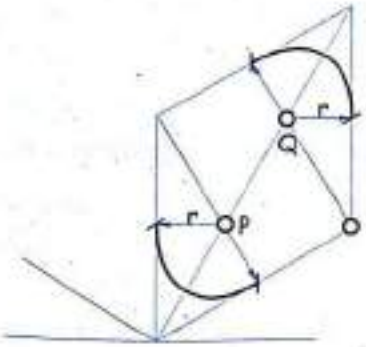

FIG. 6.12 (d)

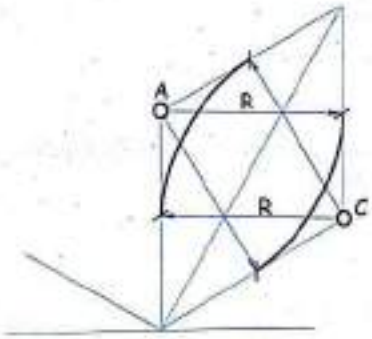

FIG. 6.12 (e)

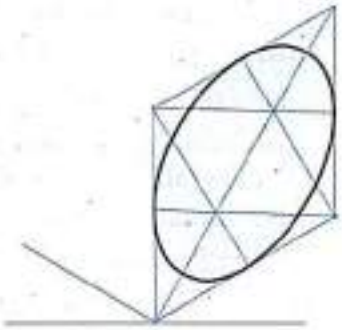

FIG. 6.12 (f)

4. Taking centres *P* and *Q* and radius, *r* draw one fourth arcs of ellipse with each centre as shown in *figure 6.12 (d)*.
5. Taking centres *A* and *C* and radius *R* draw one fourth arcs of ellipse with each centre as shown in *figure 6.12 (e)*. Hence we get isometric circle which is elliptical in shape as shown in *figure 6.12 (f)*.

Scanned by CamScanner

6. Three isometric circle (ellipse) on three isometric plane (rhombus). *Figure 6.12 (g).*

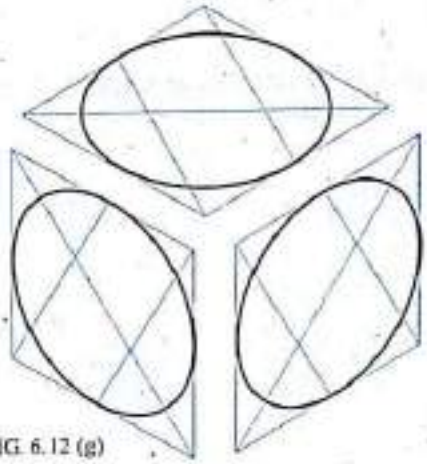

FIG. 6.12 (g)

[B] Construction of Isometric Circle by Method of Points

FIG. 6.13 (a)

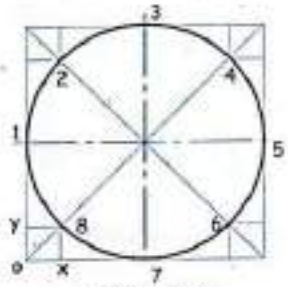

FIG. 6.13 (b)

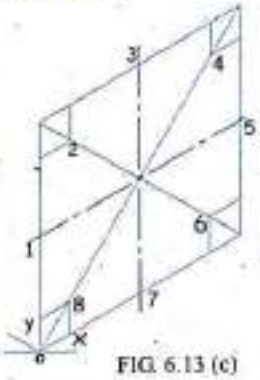

FIG. 6.13 (c)

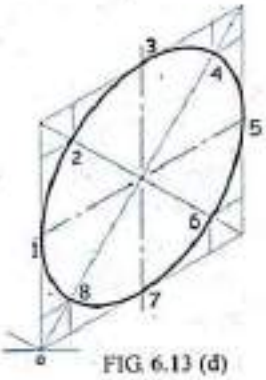

FIG. 6.13 (d)

1. *Refer figure 6.13 (a).*
   - **(i)** Enclose the circle in a square.
   - **(ii)** Construct the diagonals of square.
2. *Refer figure 6.13 (b).*
   - **(iii)** Through points of intersection of circle and diagonal, (points *2, 4, 6, 8*) construct lines parallel to sides of square.
   - **(iv)** Locate points *1* to *8* as shown.
3. *Refer figure 6.13 (c).*
   - **(v)** Construct the isometric projection of square plane (i.e. rhombus) with sides equal to diameter of circle
   - **(vi)** The points *1, 3, 5, 7* are marked directly as a mid point of the sides of rhombus.
   - **(vii)** The points *2, 4, 6, 8* are obtained by drawing the isometric lines e.g. point *8* is located by taking distance *OX* and *OY* as shown in *figure 6.13 (c).*
4. *Refer figure 6.13 (d).*
   - **(viii)** Draw smooth curve passing through these eight points.

Note : *1. Though the Four Centres Method is approximate method, it is conviniently used.*
2. Though the Method of Points is accurate method, it is tedious to use.

Scanned by CamScanner

6.12 Isometric Cylinder

Shifting of centre method to draw isometric parallel circles.

Problem 4

Draw the isometric projection of vertical cylinder with diameter of base 30 mm, axis height 50 mm.

Solution

Refer figure 6.14.

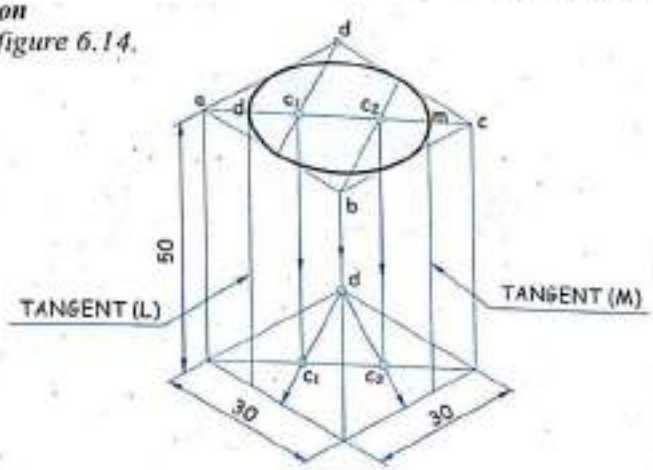

FIG. 6.14 (a)

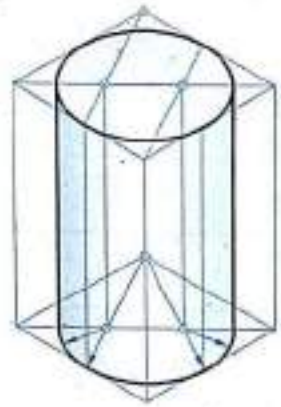

FIG. 6.14 (b)

1. Construct the rectangular crate (box) 30 × 30 × 50.
2. Draw the isometric circle (ellipse) on the top base (rhombus *abcd*) by four centre method.
3. Construct vertical tangents (L) and (M) to the curve as shown.
4. To draw the bottom base of the cylinder shift the centres c_1, c_2 and d of isometric circle vertically down by the given height (50) of cylinder.
5. With shifted centres and respective radius draw the visible position of isometric circle on the bottom base. (Avoid hidden lines).

Problem 5

Draw the isometric projection of horizontal cylinder with base diameter 50, axis length 75 mm.

Solution

Refer figure 6.15.

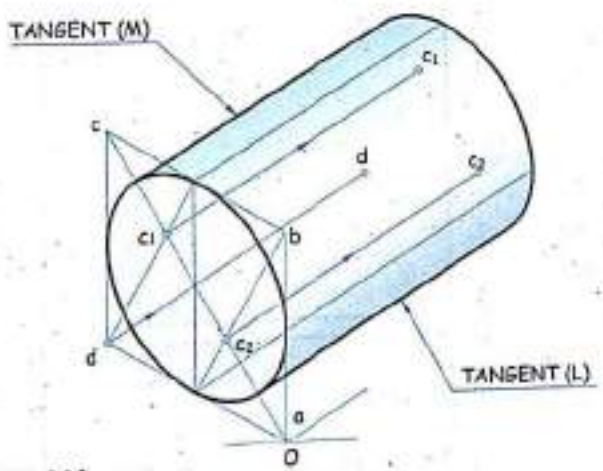

FIG. 6.15

Scanned by CamScanner

6.13 Isometric Semi-Cylinder

Problem 6

Draw the isometric projection of semi-cylinder of given size. *Refer figure 6.16 (a).*

Solution

Refer figure 6.16 (b).

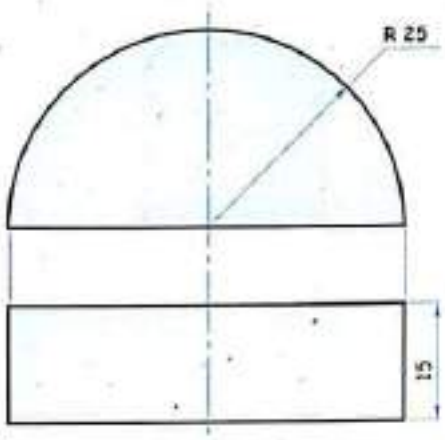

FIG. 6.16 (a)

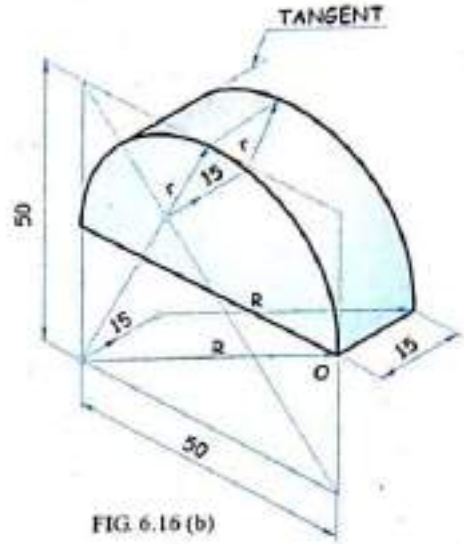

FIG. 6.16 (b)

1. Draw the rhombus of size 50 × 50 as a isometric plane.
2. Construct the isometric semi-circle by four centre method (only two centres are used).
3. By shifting the centre draw the visible portion of semi-cylinder with respective radius.

Problem 7

Draw the semi-circular slap with different orientation of origin.

Refer figure 6.17 (a).

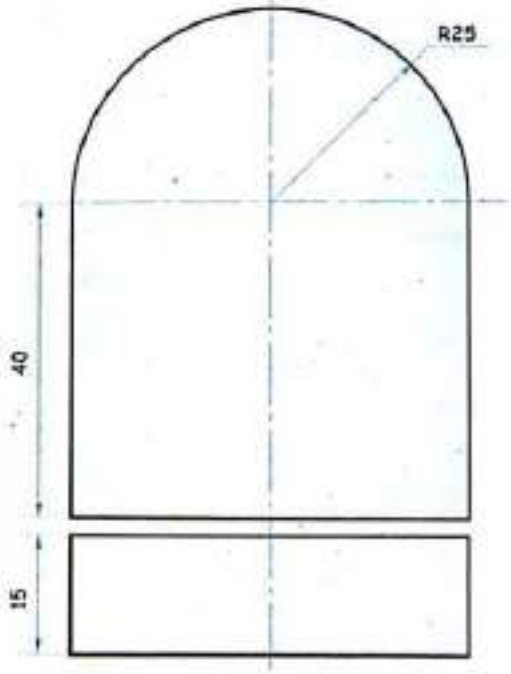

FIG. 6.17 (a)

Scanned by CamScanner

Solution

Refer figure 6.17 (b), (c), (d) and (e).

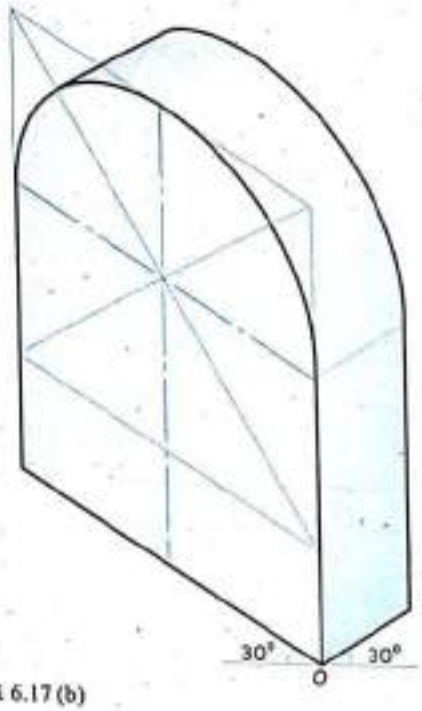

FIG. 6.17 (b)

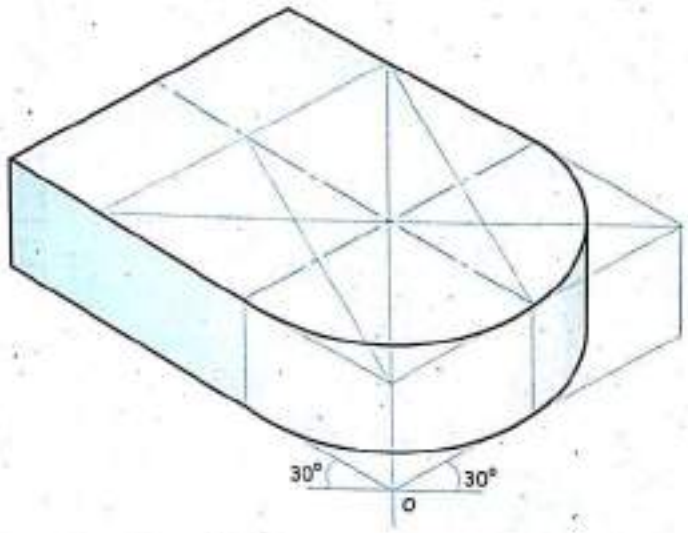

FIG. 6.17 (c)

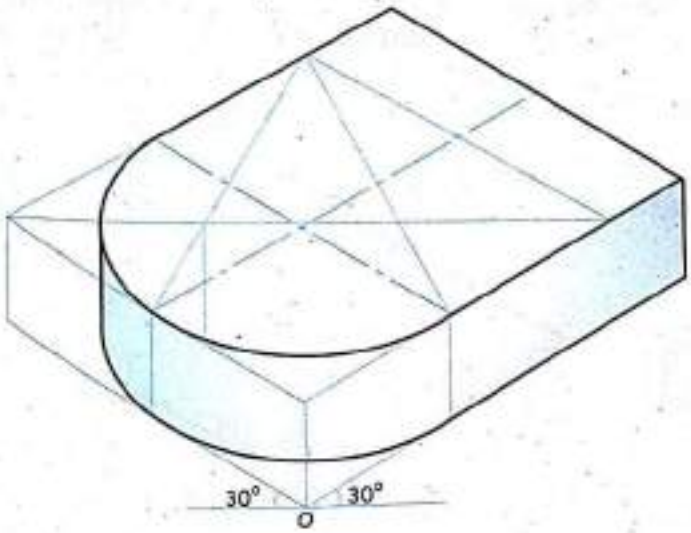

FIG. 6.17 (d)

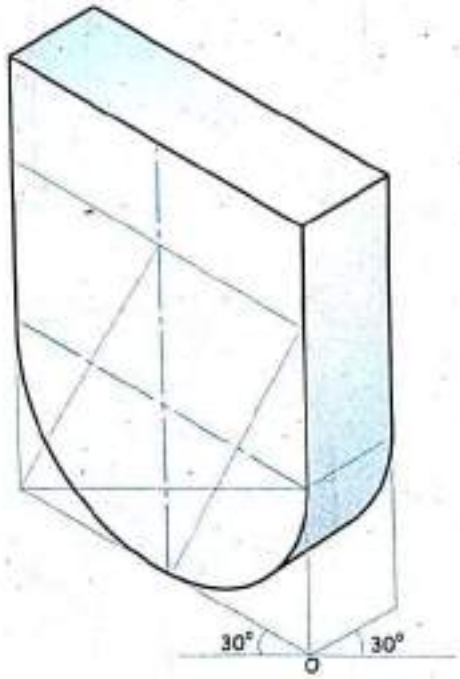

FIG. 6.17 (e)

Scanned by CamScanner

6.14 Arc of Circle in Isometric Projection

Problem 8

Draw the rectangular slab having two corners with quarter circle in different position. *Refer figure 6.18 (a).*

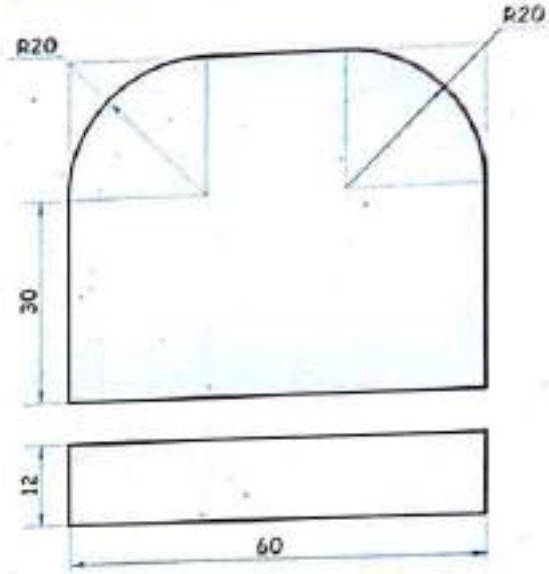

FIG. 6.18 (a)

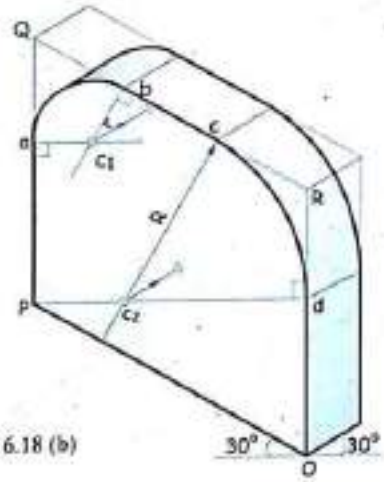

FIG. 6.18 (b)

Solution

Refer figure 6.18 (b), (c) and (d).

1. Mark the points *a,b* and *c,d* where arc begins.
2. Draw perpendicular at the points *a,b,c,d* and locate the centres for the isometric arc.
3. With the centres c_1 and c_2 thus obtained and the isometric radius *r* and *R* draw arcs. These are required isometric arcs.
4. Draw the remaining arcs by shifting the centre along isometric lines at a distance equal to the thickness of plate.

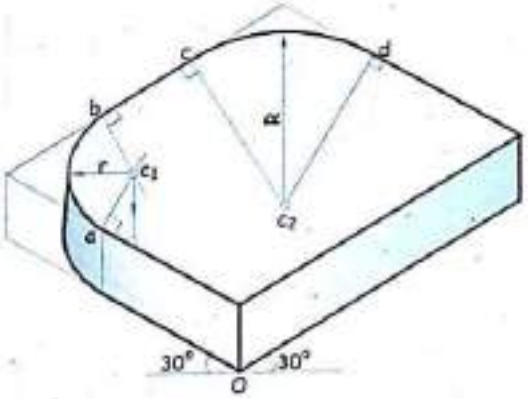

FIG. 6.18 (c)

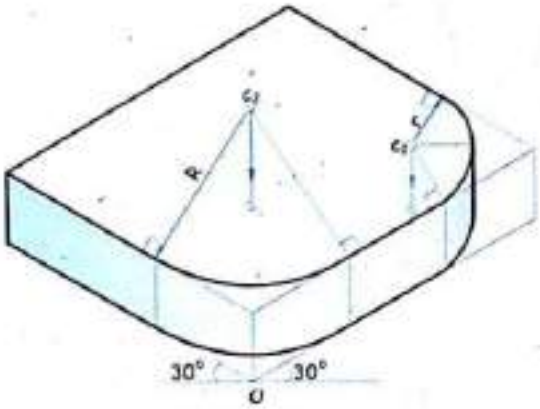

FIG. 6.18 (d)

Scanned by CamScanner

6.15 Placing of Two Blocks with Different Base in Contact

Problem 9

Draw the isometric view for the given in *figure 6.19 (a), 6.20 (a), 6.21 (a), 6.22 (a).*

Solution. *Refer figure 6.19 (b).*

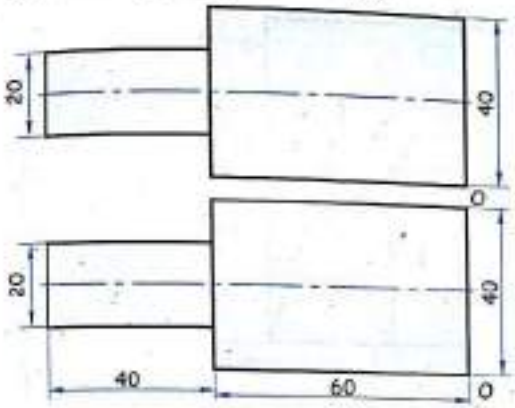

FIG. 6.19 (a)

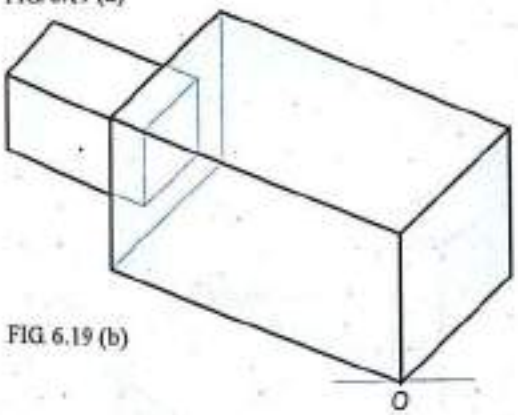

FIG. 6.19 (b)

Solution. *Refer figure 6.20 (b).*

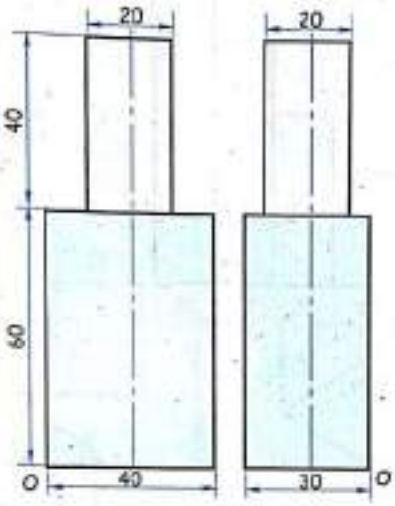

FIG. 6.20 (a)

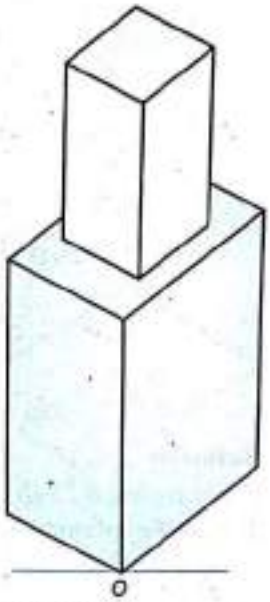

FIG. 6.20 (b)

Solution. *Refer figure 6.21 (b).*

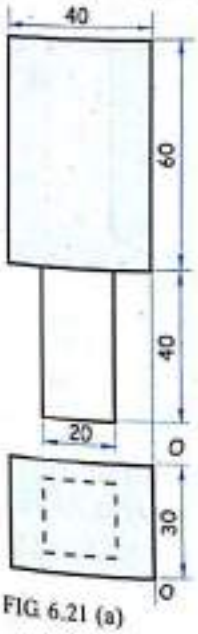

FIG. 6.21 (a)

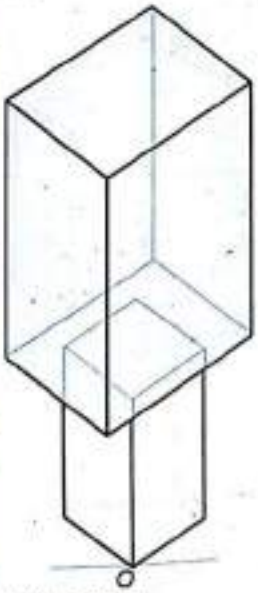

FIG. 6.21 (b)

Solution. *Refer figure 6.22 (b).*

FIG. 6.22 (a)

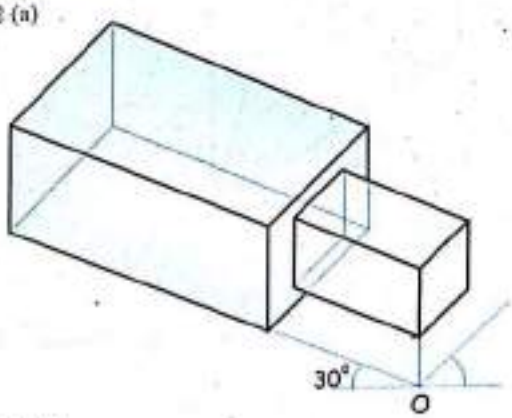

FIG. 6.22 (b)

Scanned by CamScanner

6.16 Object Having More Surfaces

Problem 10

Two views of an object are given in *figure 6.23 (a)*. Draw its isometric view.

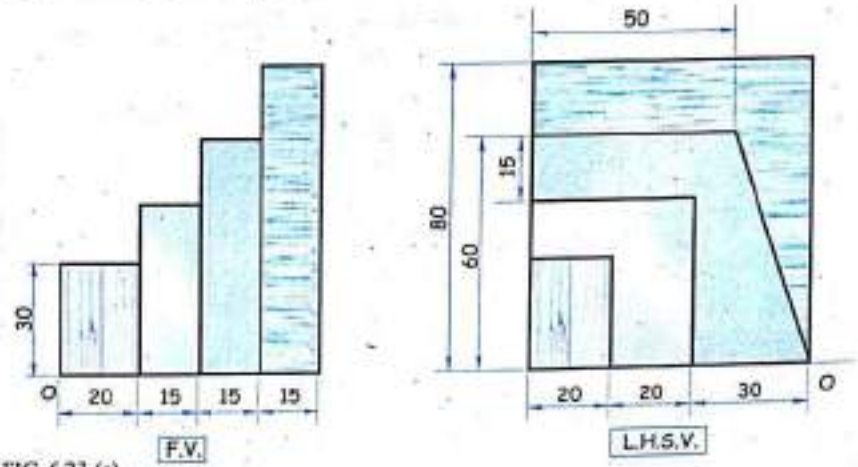

FIG. 6.23 (a)

Solution

Refer figure 6.23 (b).

It is self explanatory.

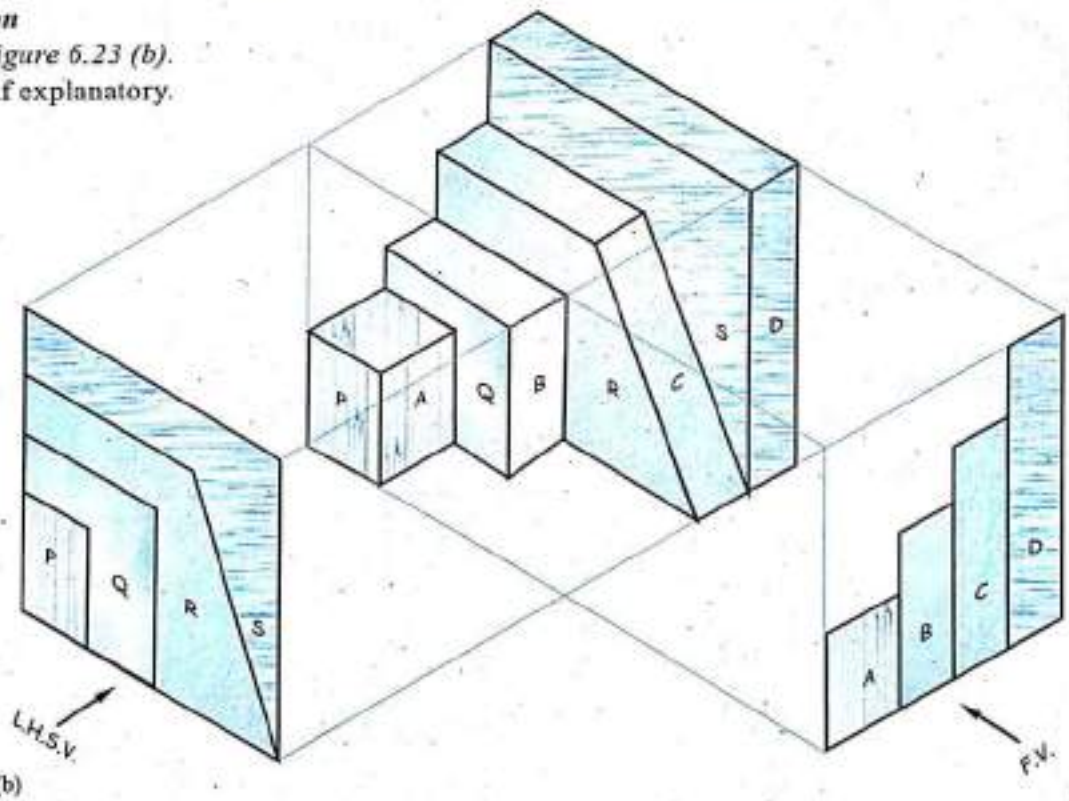

FIG. 6.23 (b)

Note : *When there are more surfaces in an object, draw part by part as shown in figure 6.23 (b). Surface P and A are in relation with each other because of its common height. Similarly surfaces Q and B; R and C; S and D are of common height. So, place them in contact with respect to views to represent the isometric view.*

Scanned by CamScanner

6.17 Solved Problems

Problem 1

Figure 6.24 (a) shows two views of an object. Draw the isometric view taking *O* as a origin. Use natural scale.

Solution

Refer figure 6.24 (b).

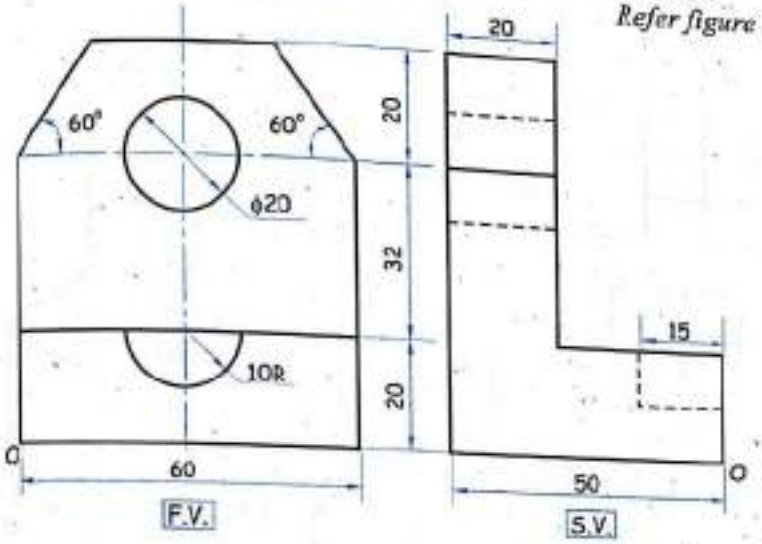

FIG. 6.24 (a)

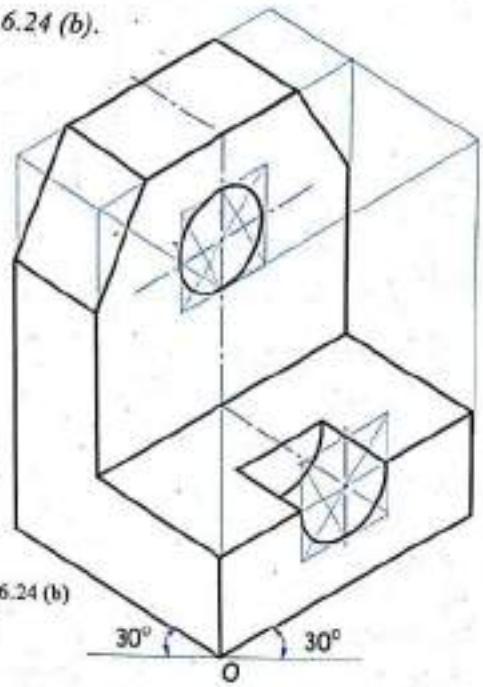

FIG. 6.24 (b)

Problem 2

Figure 6.25(a) shows two orthographic views of an object. Draw the isometric view with a natural scale. Take *O* as origin.

Solution

Refer figure 6.25 (b).

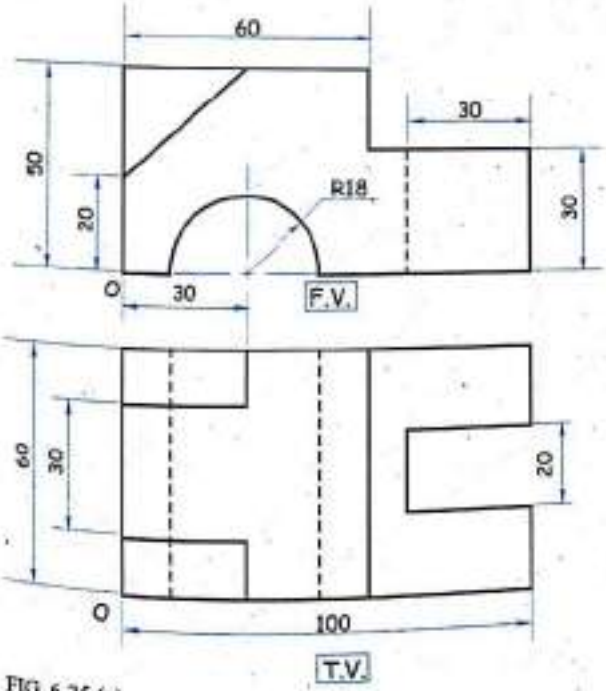

FIG. 6.25 (a)

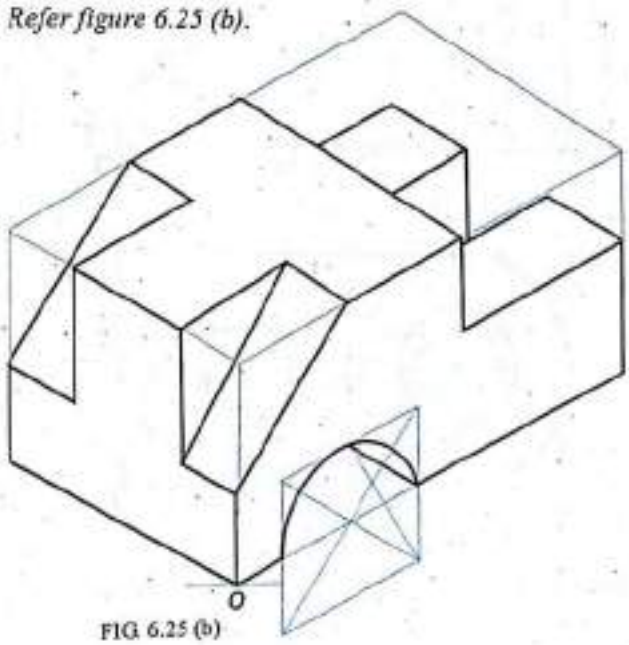

FIG. 6.25 (b)

Scanned by CamScanner

Problem 3

Figure 6.26 (a) shows front view and side view of an object. Draw its isometric projection about an origin *O*.

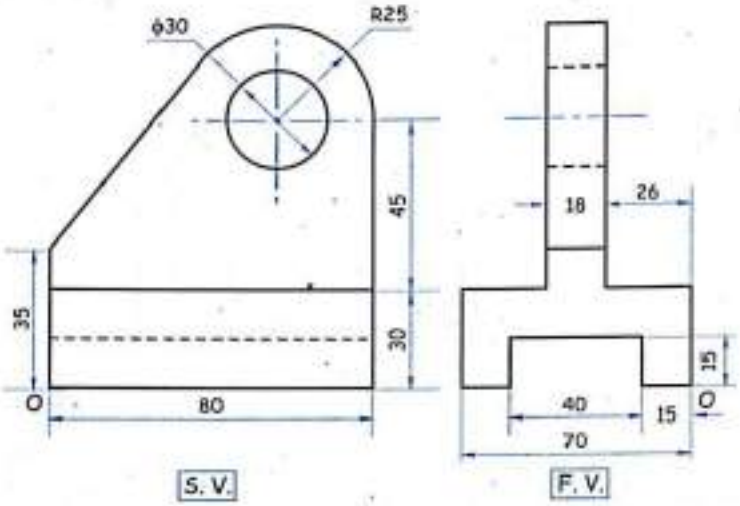

FIG. 6.26 (a)

Solution

Refer figure 6.26 (b).

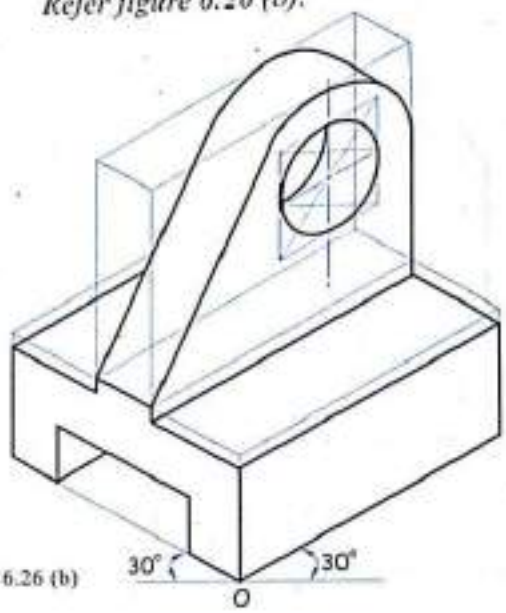

FIG. 6.26 (b)

Problem 4

Figure 6.27 (a) shows two orthographic views of an object. Draw the isometric view using a natural scale. Take *O* as origin.

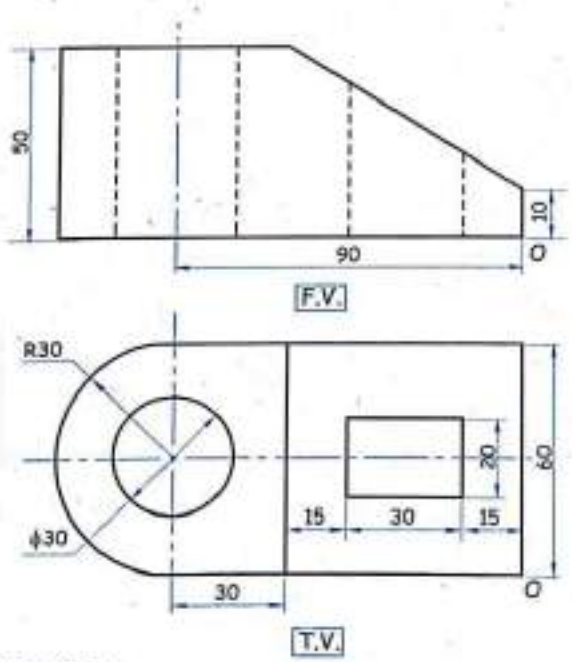

FIG. 6.27 (a)

Solution

Refer figure 6.27 (b).

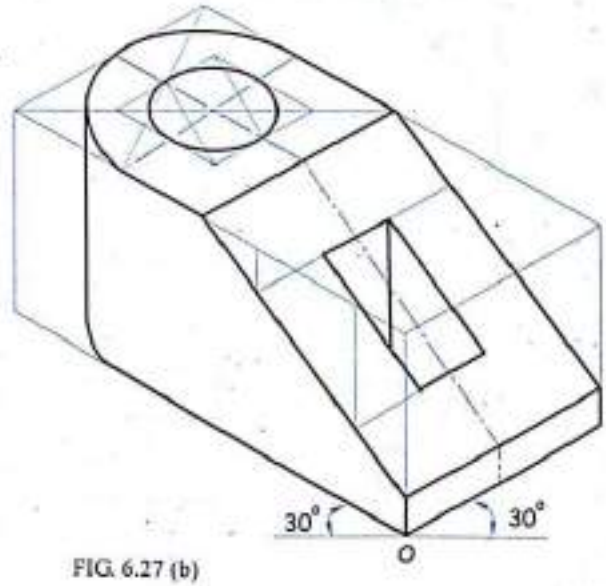

FIG. 6.27 (b)

Scanned by CamScanner

Problem 5

Figure 6.28 (a) shows front view and side view of an object. Draw its isometric view using isometric length.

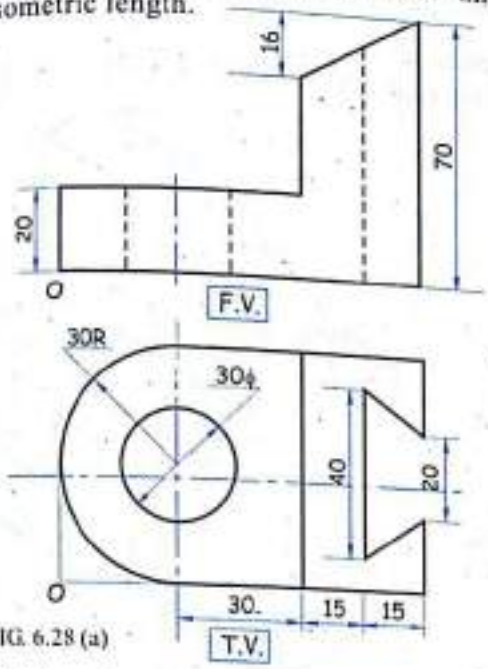

FIG. 6.28 (a)

Solution

Refer figure 6.28 (b).

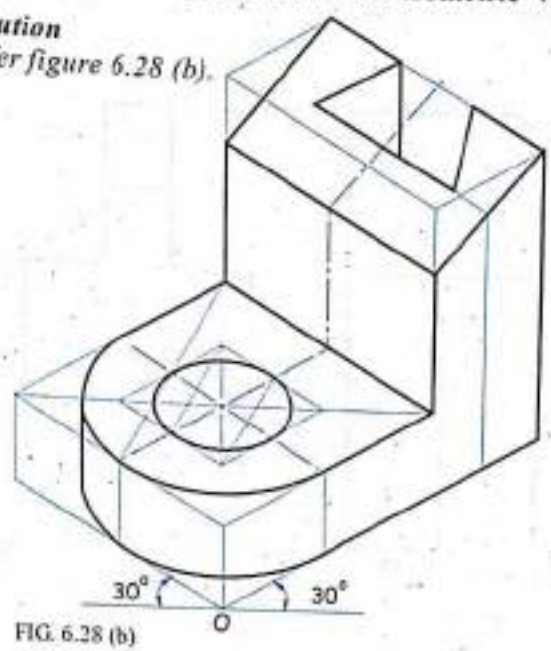

FIG. 6.28 (b)

Problem 6

Figure 6.29 (a) shows front view and top view of a **vertical slide**, drawn by using first angle method of projection.

Draw to natural scale, an isometric view of it. Do not show hidden lines and dimensions. (Retain all construction lines.)

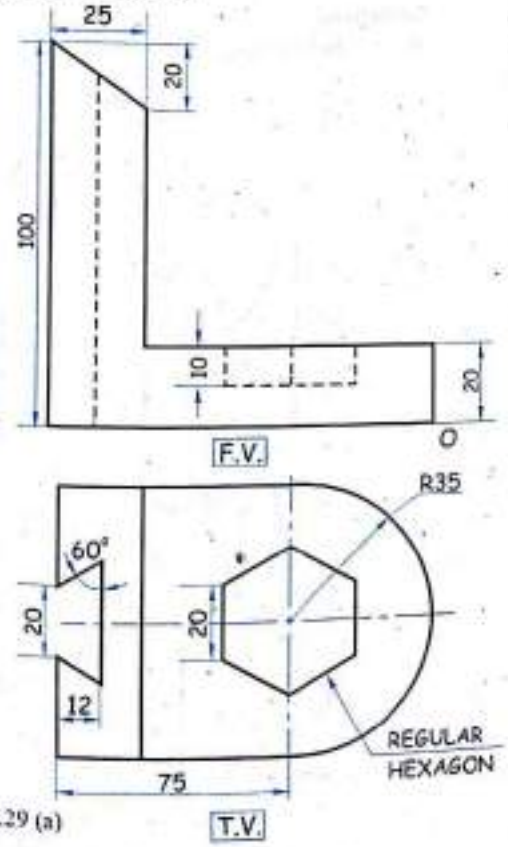

FIG. 6.29 (a)

Solution

Refer figure 6.29 (b).

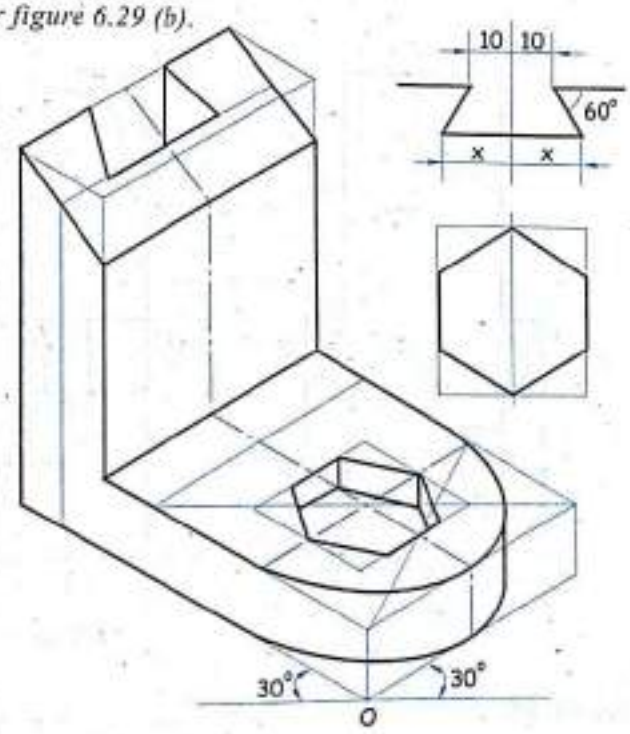

FIG. 6.29 (b)

Scanned by CamScanner

Problem 7

Draw isometric view using natural scale taking *O* as origin for *figure 6.30 (a)*.

Solution

Refer figure 6.30 (b).

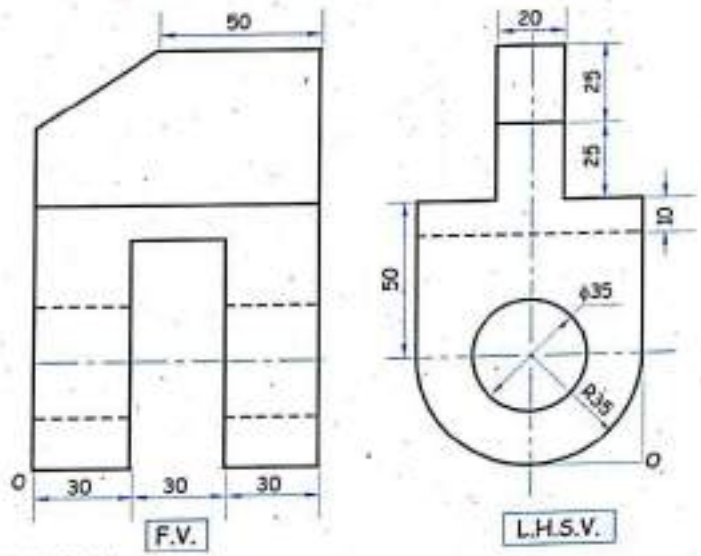

FIG. 6.30 (a)

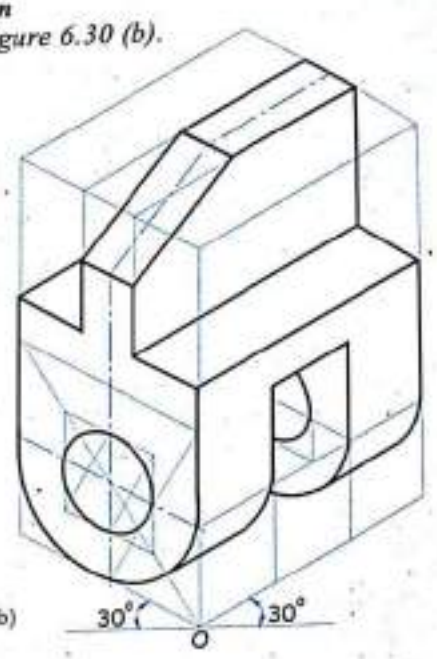

FIG. 6.30 (b)

Problem 8

Figure 6.31 (a) shows the front-view and left hand side-view of an object. Draw the isometric view using natural scale.

Solution

Refer figure 6.31 (b).

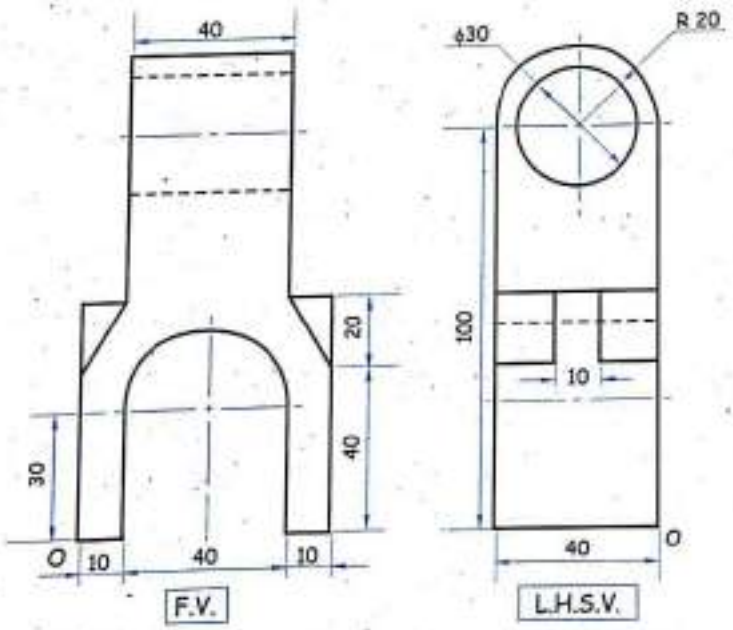

FIG. 6.31 (a)

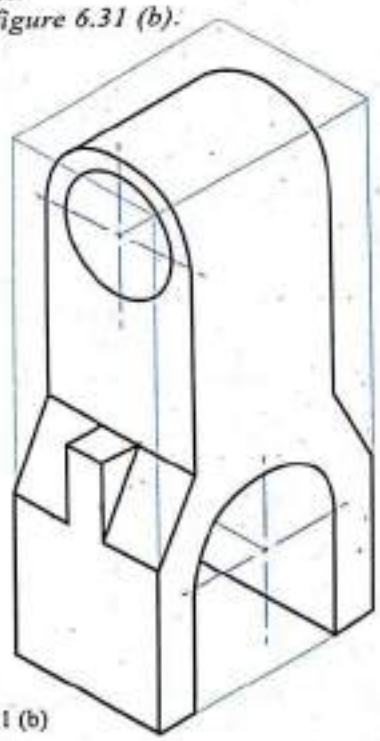

FIG. 6.31 (b)

Scanned by CamScanner

Problem 9

Draw isometric view for *figure 6.32 (a)*.

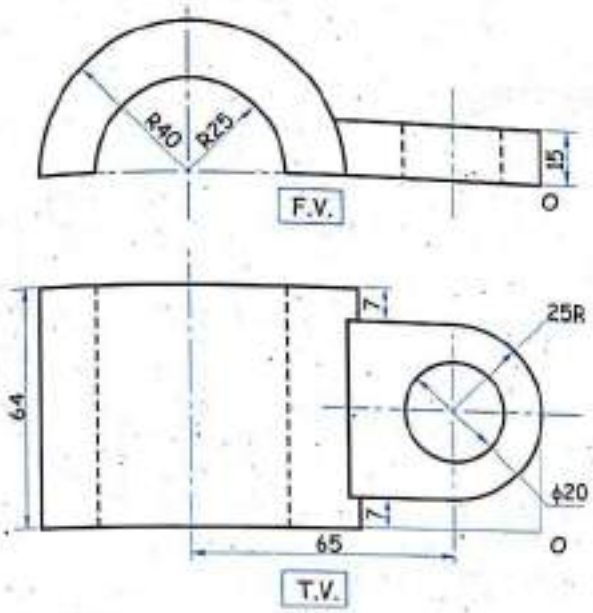

FIG. 6.32 (a)

Solution

Refer figure 6.32 (b).

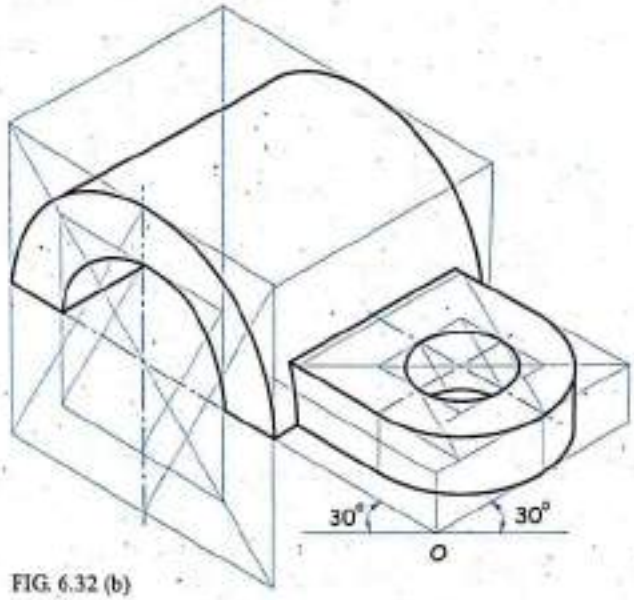

FIG. 6.32 (b)

Problem 10

Draw an isometric view of the object from the given front view and top view using natural scale.

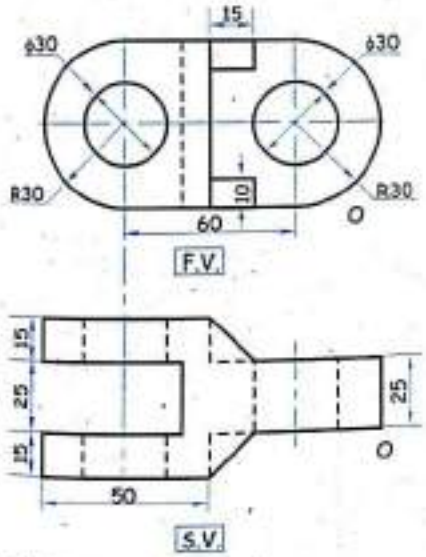

FIG. 6.33 (a)

Solution

Refer figure 6.33 (b).

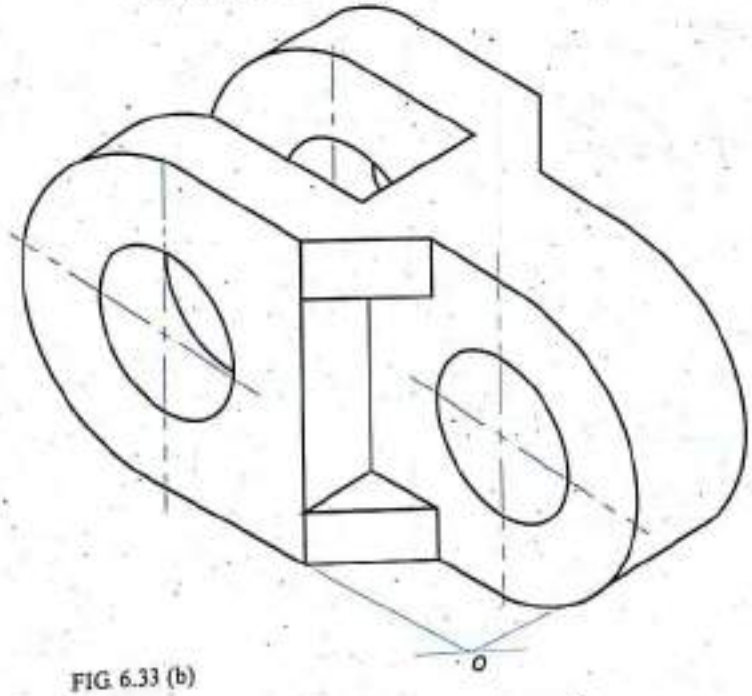

FIG. 6.33 (b)

Scanned by CamScanner

Problem 11

Figure 6.34 (a) shows two views of an object. Draw its isometric view with *O* as origin.

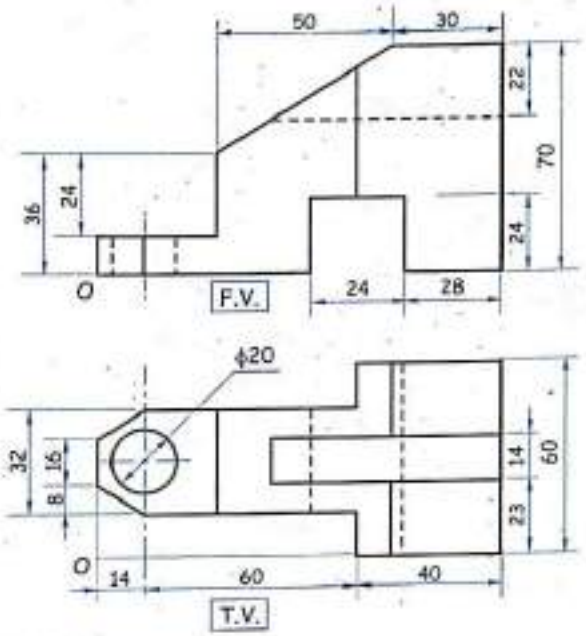

FIG. 6.34 (a)

Solution

Refer figure 6.34 (b).

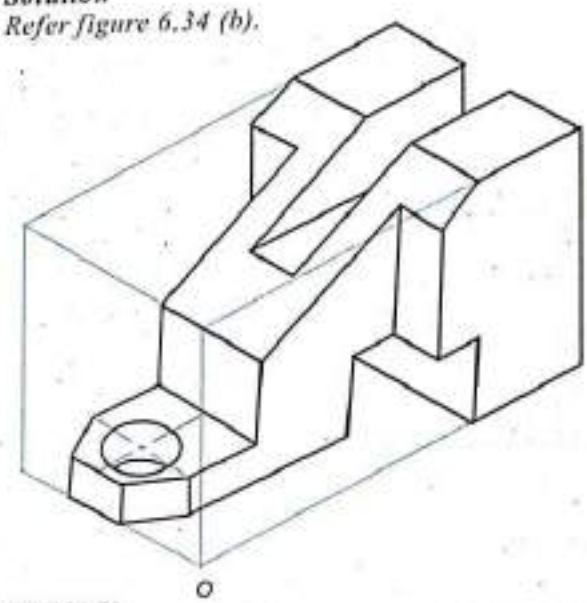

FIG. 6.34 (b)

Problem 12

Figure 6.35 (a) shows front view of an object. Draw its isometric projection about an origin *O*.

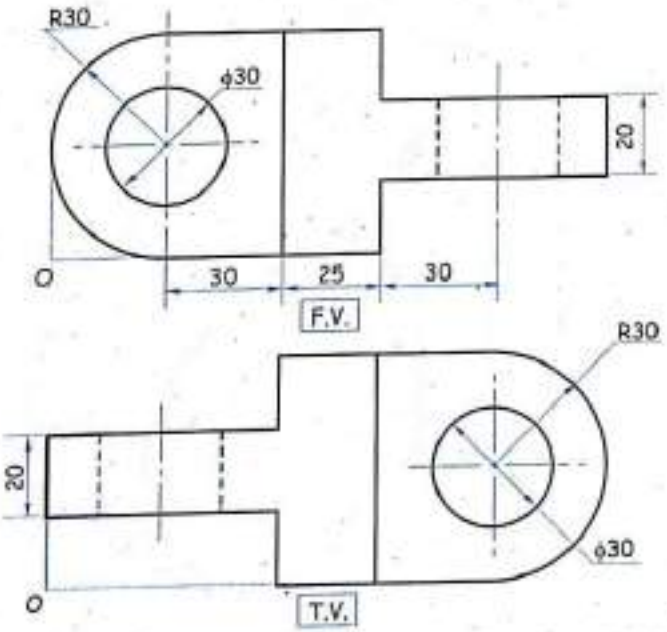

FIG. 6.35 (a)

Solution

Refer figure 6.35 (b).

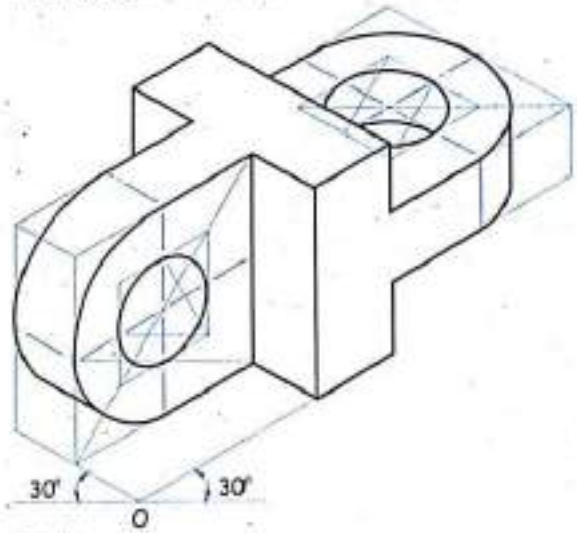

FIG. 6.35 (b)

Scanned by CamScanner

Problem 13

Figure 6.36 (a) shows two views of an object. Draw its isometric view with *O* as origin.

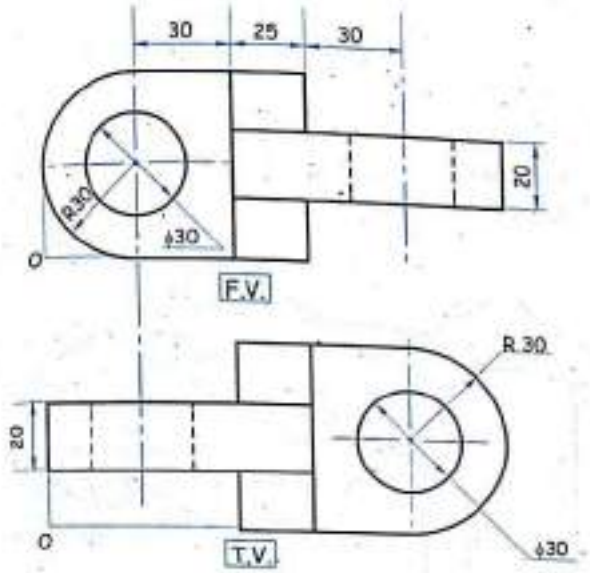

FIG. 6.36 (a)

Solution

Refer figure 6.36 (b).

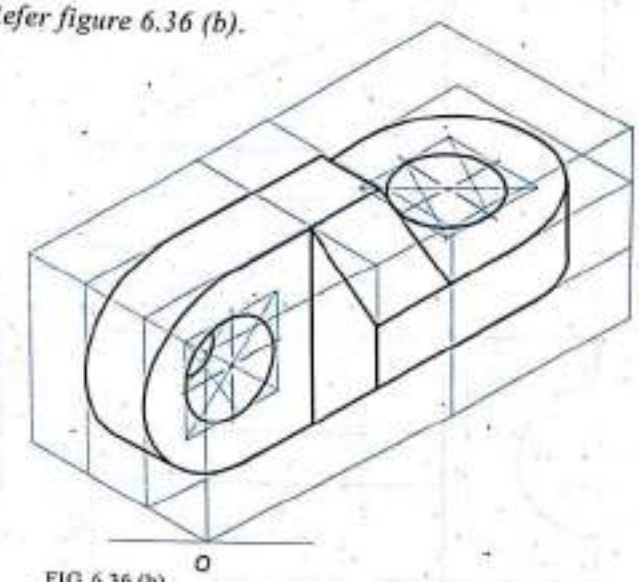

FIG. 6.36 (b)

Problem 14

Two orthographic views are given in *figure 6.37 (a)* by first angle method. Draw an isometric view taking *O* as origin. Use natural scale.

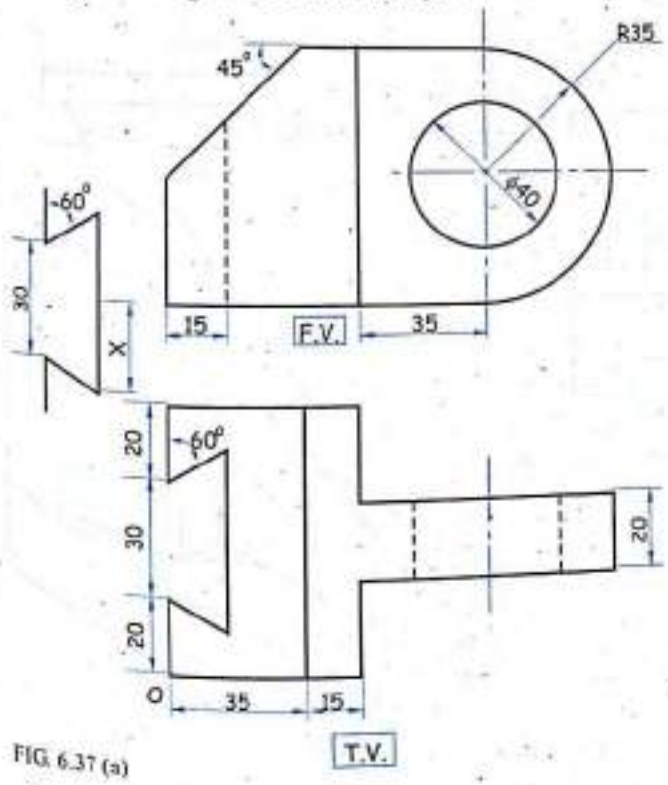

FIG. 6.37 (a)

Solution

Refer figure 6.37 (b).

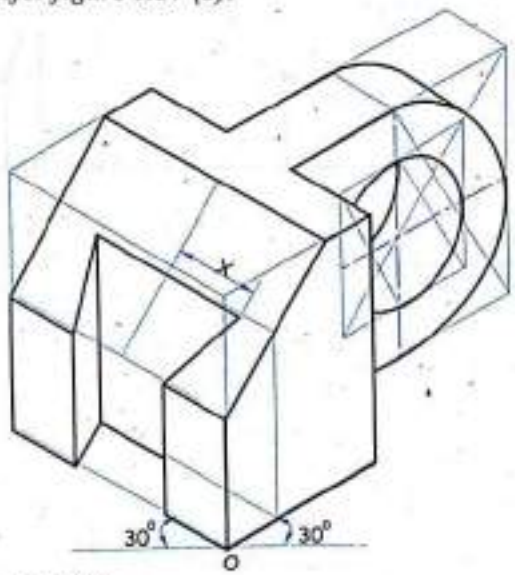

FIG. 6.37.(b)

Scanned by CamScanner

Problem 15

Figure 6.38 (a) shows two views of an object. Draw isometric view of an object by using natural scale. Taking *O* as a origin.

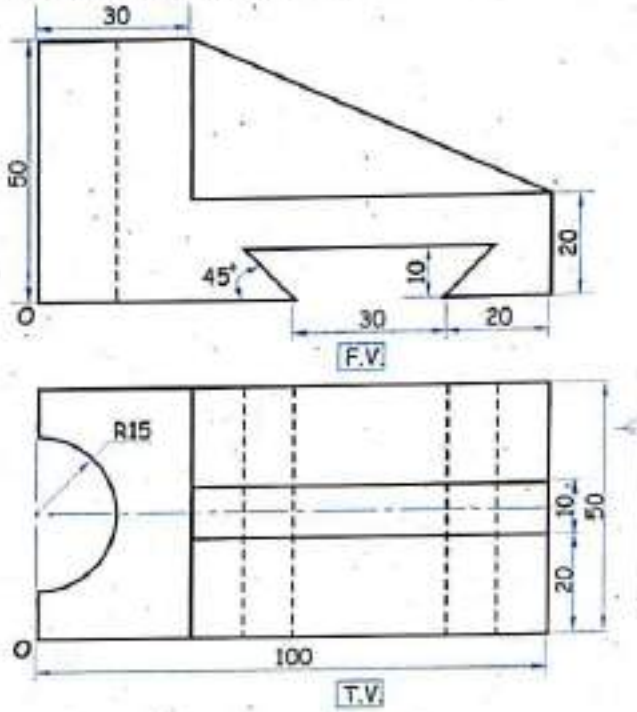

FIG. 6.38 (a)

Solution

Refer figure 6.38 (b).

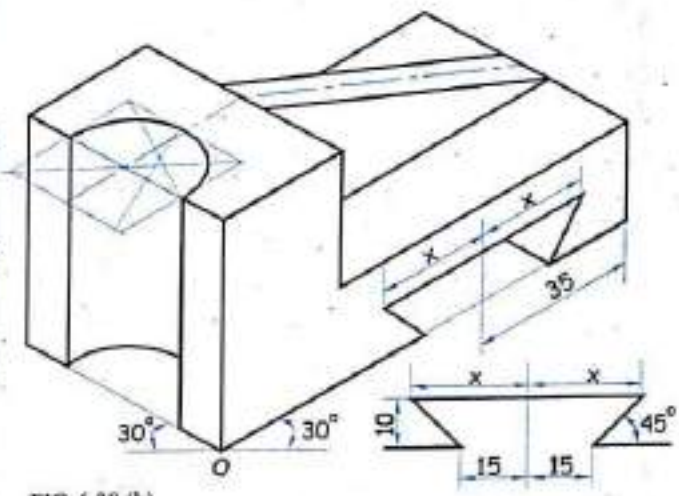

FIG. 6.38 (b)

Problem 16

Figure 6.39 (a) shows two views of an object. Draw its isometric view with *O* as origin.

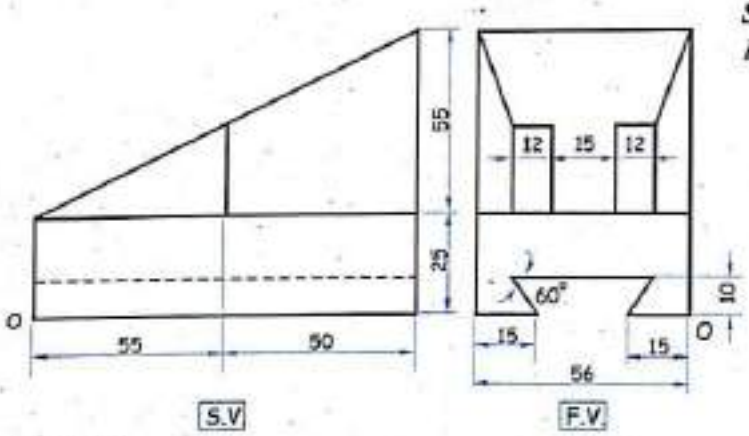

FIG. 6.39 (a)

Solution

Refer figure 6.39 (b).

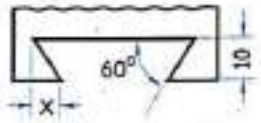

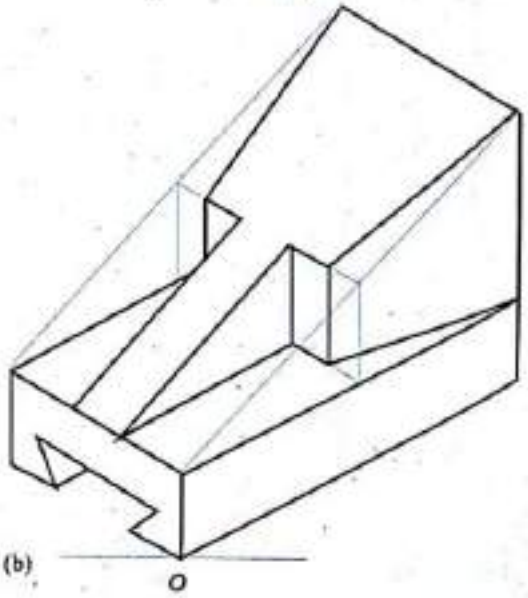

FIG. 6.39 (b)

Scanned by CamScanner

Problem 17

Figure 6.40 (a) shows two orthographic views of an object by first angle method. Draw an isometric view with natural scale. Take *O* as origin.

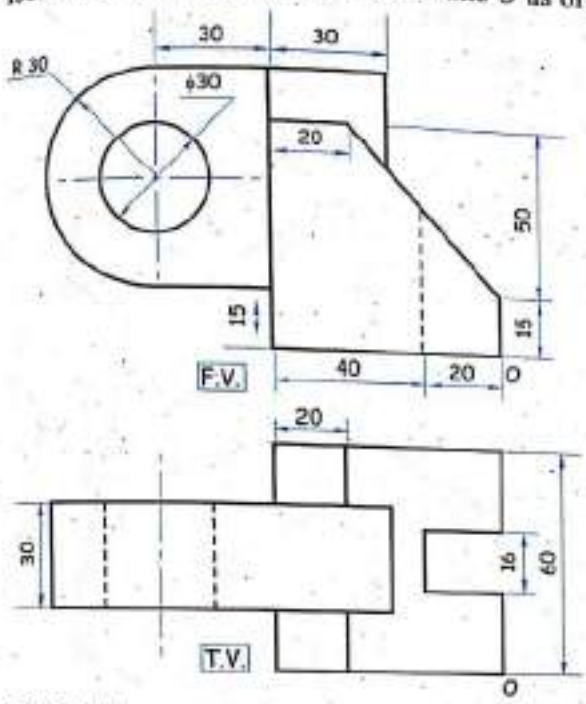

FIG 6.40 (a)

Solution

Refer figure 6.40 (b).

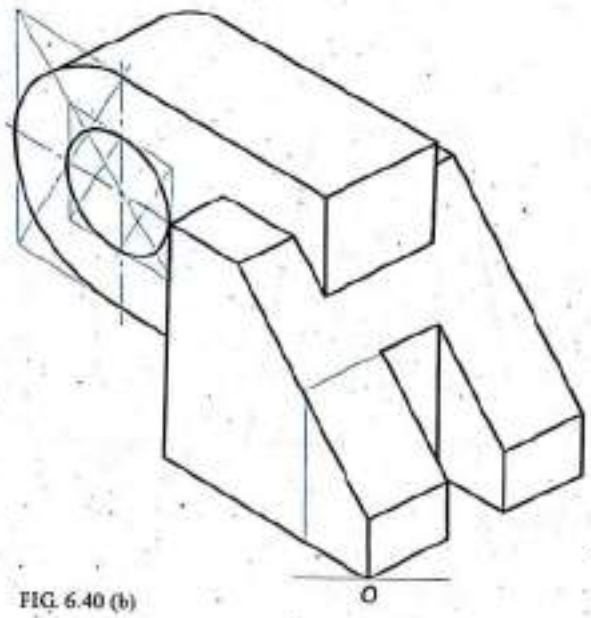

FIG. 6.40 (b)

Problem 18

Figure 6.41 (a) shows front view and side view of an object. Draw its isometric projection about origin *O*.

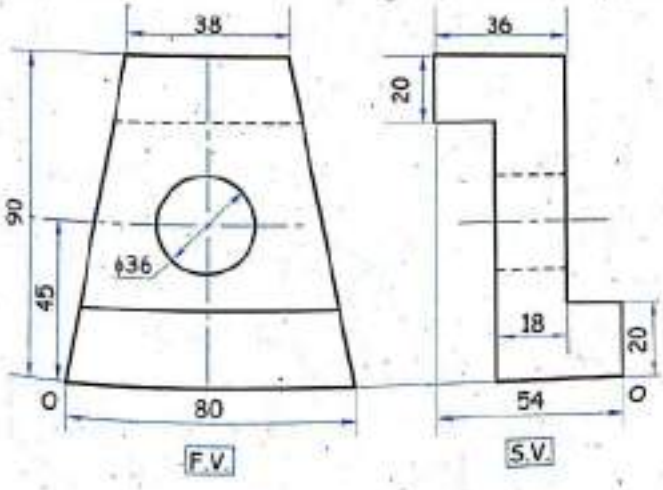

FIG 6.41 (a)

Solution

Refer figure 6.41 (b).

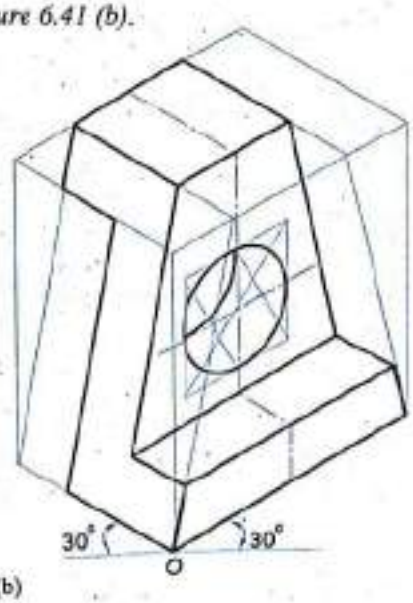

FIG. 6.41 (b)

Scanned by CamScanner

Problem 19

Draw isometric view of an object shown in the *figure 6.42 (a)*, using the natural scale. Start from point *O*. (Third angle method of projection.)

Solution

Refer figure 6.42 (b).

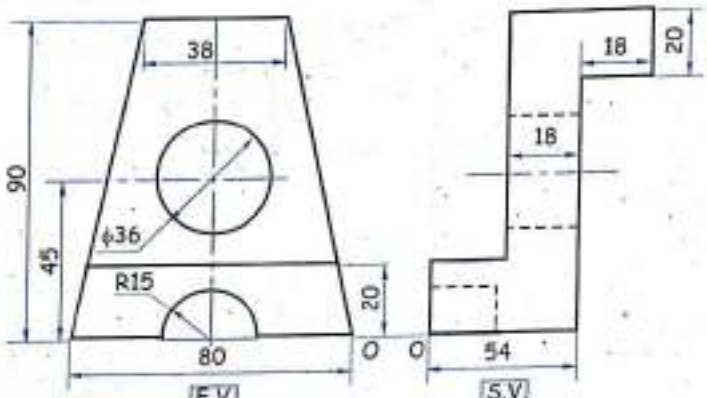

FIG. 6.42 (a)

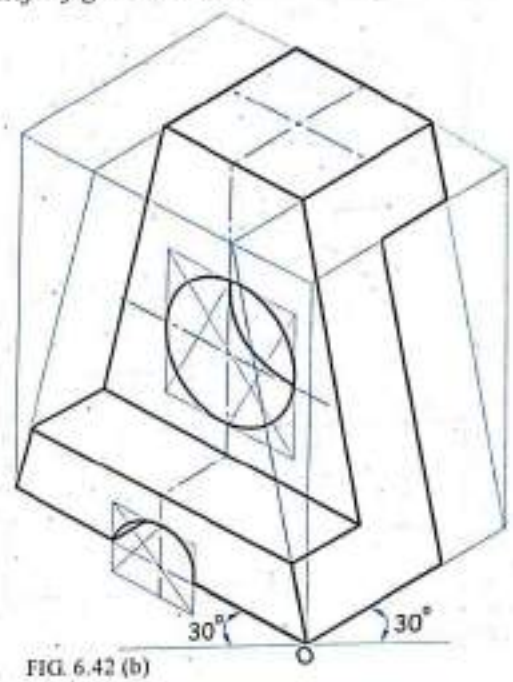

FIG. 6.42 (b)

Problem 20

Figure 6.43 (a) shows two views of an object. Draw isometric projection of the object by using natural scale.

Solution

Refer figure 6.43 (b).

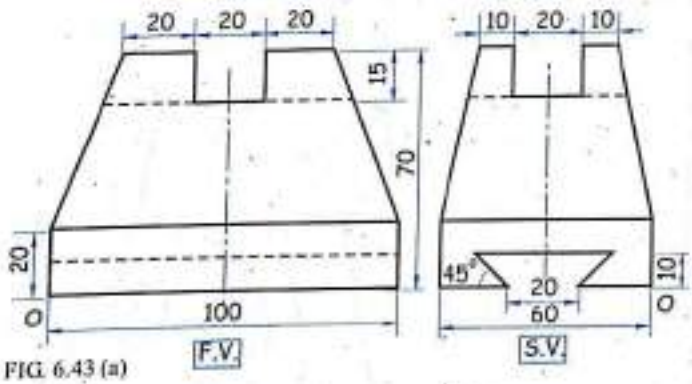

FIG. 6.43 (a)

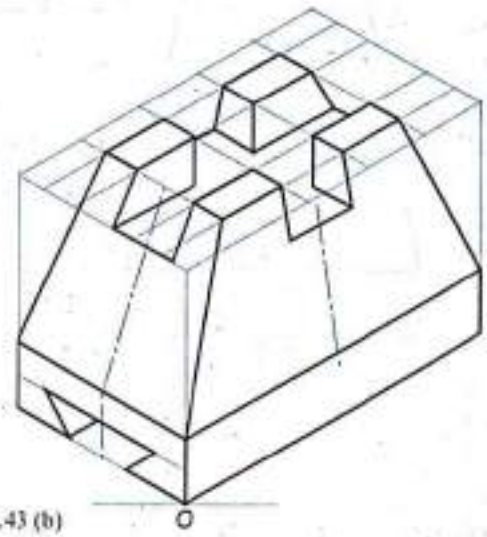

FIG. 6.43 (b)

Scanned by CamScanner

Problem 21

Figure 6.44 (a) shows front view and top view of an object. Draw its isometric view.

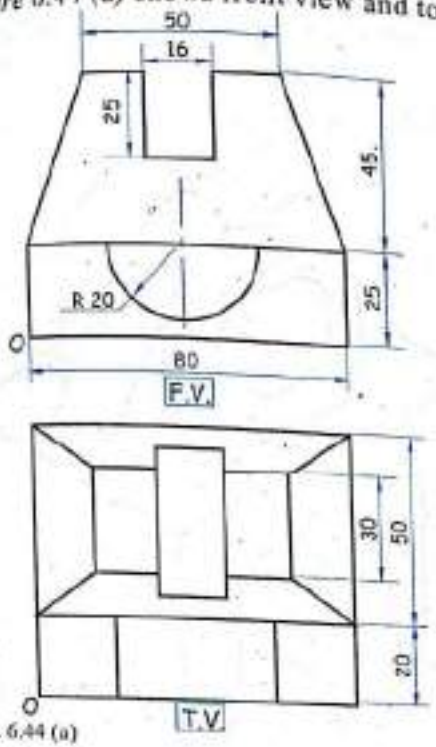

FIG. 6.44 (a)

Solution

Refer figure 6.44 (b).

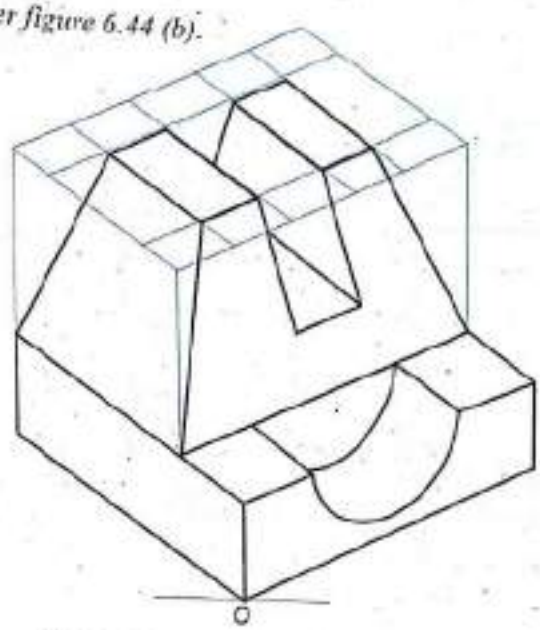

FIG. 6.44 (b)

Problem 22

Two views of an object are shown in the *figure 6.45 (a)*. Draw isometric view of it.

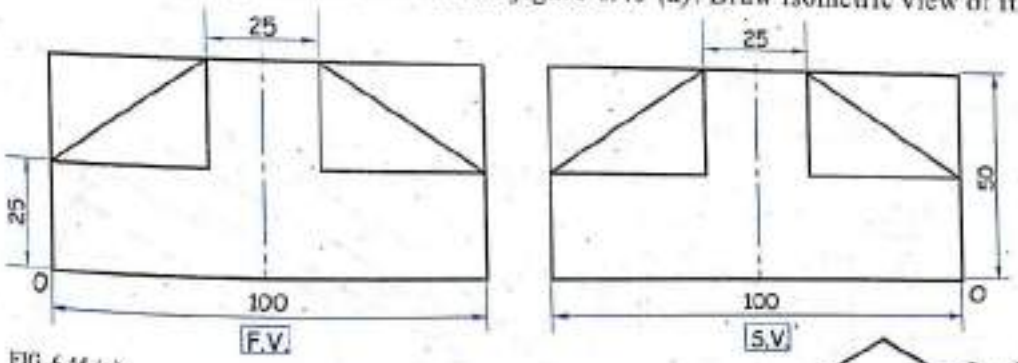

FIG. 6.45 (a)

Solution

Refer figure 6.45 (b).

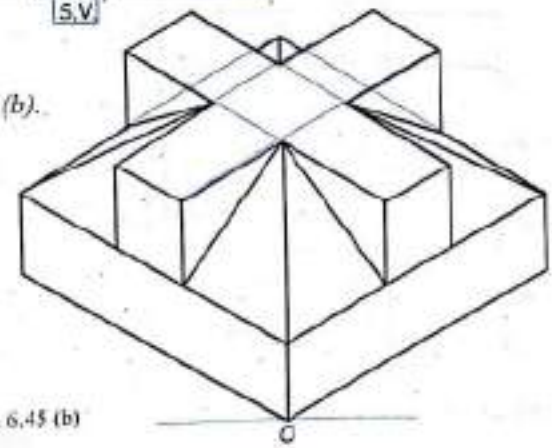

FIG. 6.45 (b)

Scanned by CamScanner

Problem 23

Figure 6.46 (a) shows F.V. and L.H.S.V. of an object. Draw the isometric view of the object using natural scale and showing front and right side face visible. ***(May '96, M.U.)***

Solution

Refer figure 6.46 (b).

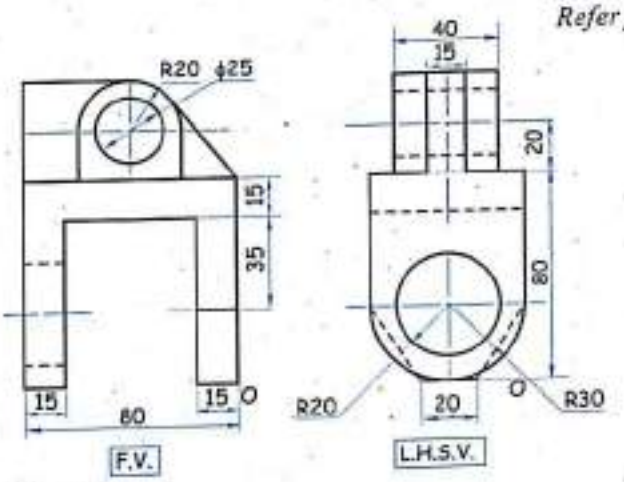

FIG. 6.46 (a)

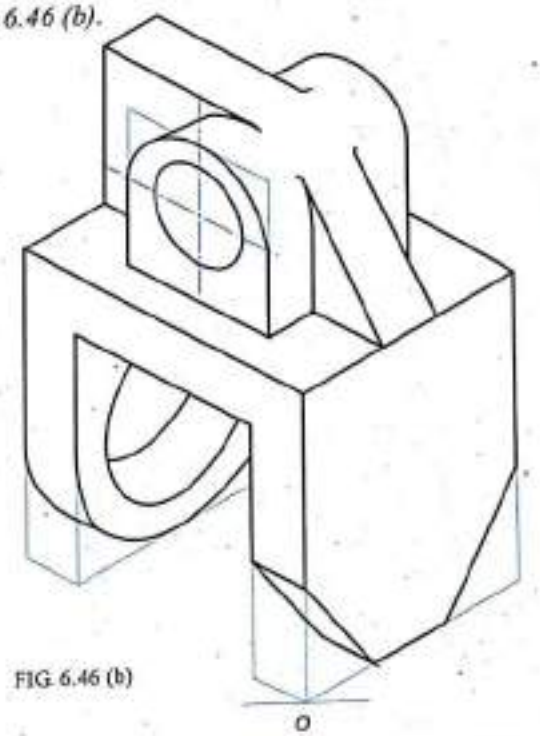

FIG. 6.46 (b)

Problem 24

Figure 6.47 (a) shows F.V. and T.V. of an object. Draw isometric view using natural scale and *O* as reference. ***(Dec. '99, Jan. '03, M.U.)***

Solution

Refer figure 6.47 (b).

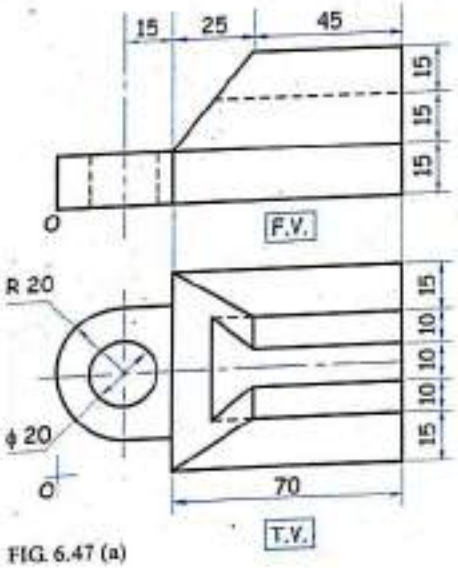

FIG. 6.47 (a)

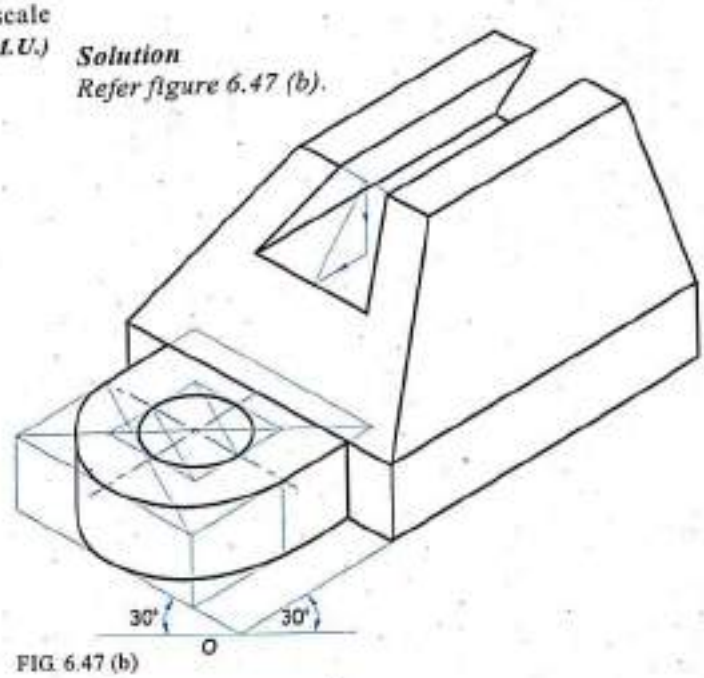

FIG. 6.47 (b)

Scanned by CamScanner

Problem 25

Draw an isometric drawing (using natural scale) of the front and top view as shown in *figure 6.48 (a)*.

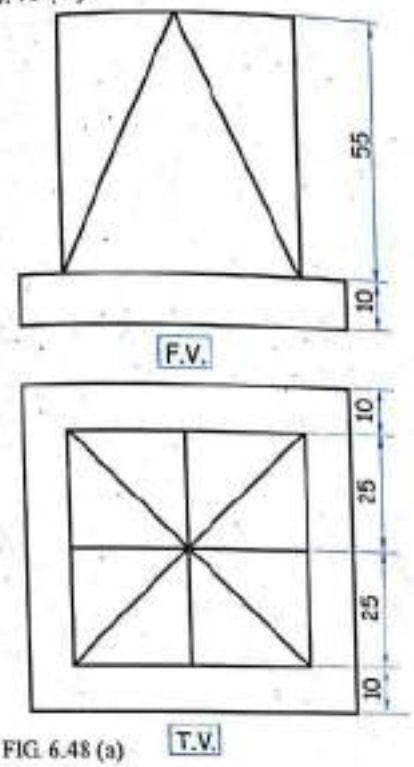

FIG. 6.48 (a)

Solution

Refer figure 6.48 (b).

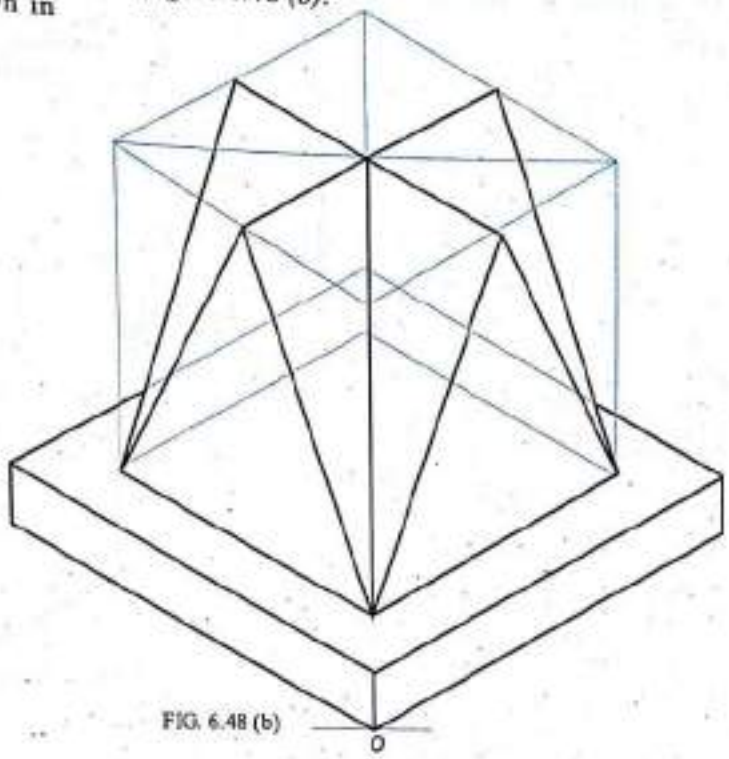

FIG. 6.48 (b)

Problem 26

Two views are given of an object. Draw its isometric drawing using natural scale.

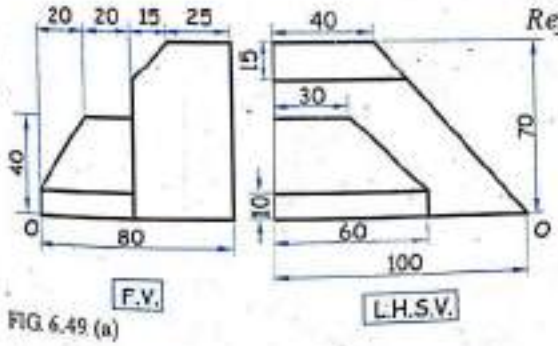

FIG. 6.49 (a)

Solution

Refer figure 6.49 (b).

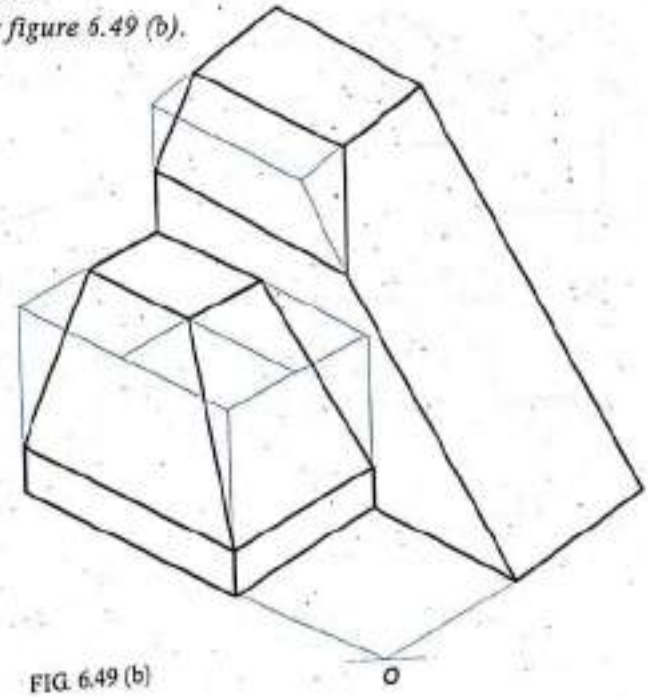

FIG. 6.49 (b)

Scanned by CamScanner

Problem 27

Draw an isometric view of the object two views of which are shown in *figure 6.50 (a)* Use natural scale. Do not insert dotted lines and dimensions.

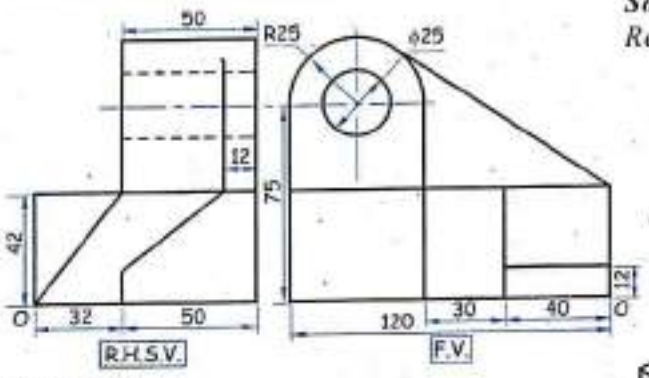

FIG. 6.50 (a)

Solution

Refer figure 6.50 (b).

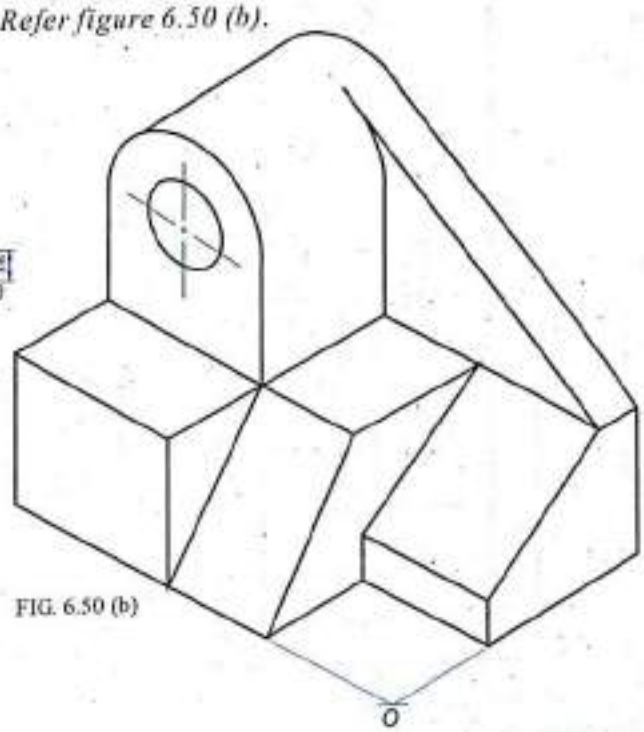

FIG. 6.50 (b)

Problem 28

Figure 6.51 (a) shows two view of an object. Draw an isometric view of it using true scale.

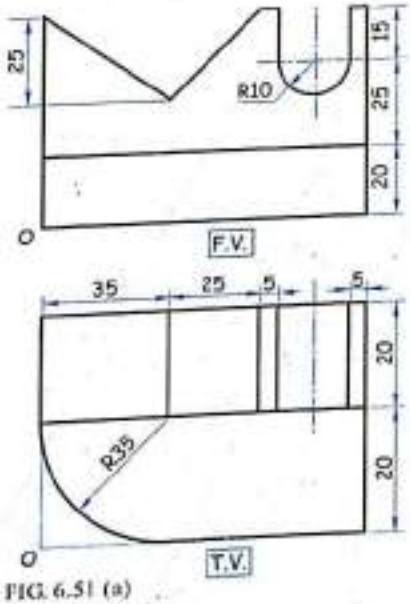

FIG. 6.51 (a)

Solution

Refer figure 6.51 (b).

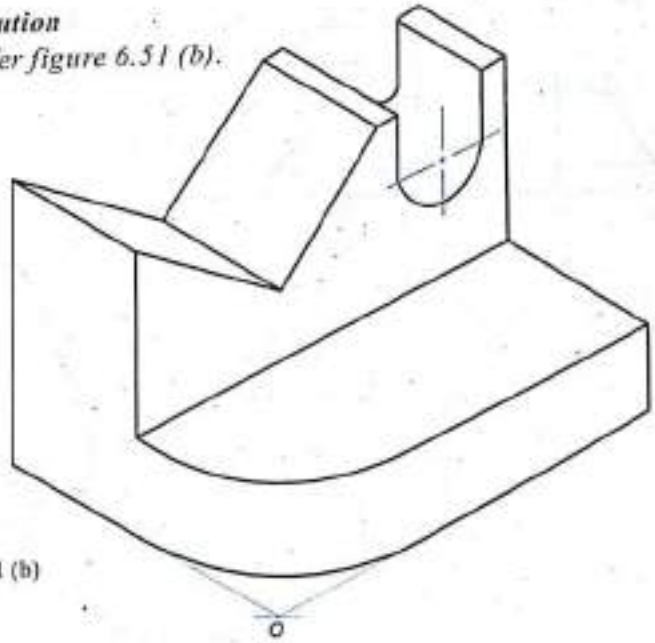

FIG. 6.51 (b)

Scanned by CamScanner

Problem 29

Figure 6.52 (a) shows two views of an object. Draw its isometric drawing using natural scale.

(May '95, M.U.)

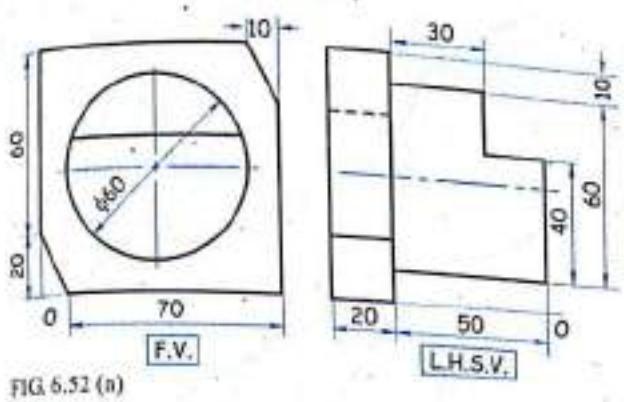

FIG. 6.52 (a)

Solution

Refer figure 6.52 (b).

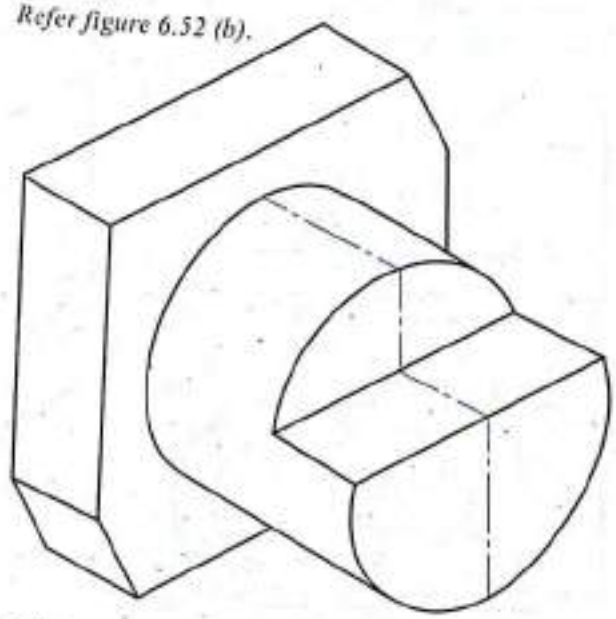

FIG. 6.52 (b)

Problem 30

The *figure 6.53 (a)* shows F.V. and L.H.S.V. of a machine part, draw the isometric view using natural scale taking *O* as the origin.

(Nov. '97, Nov. '05, May '07, M.U.)

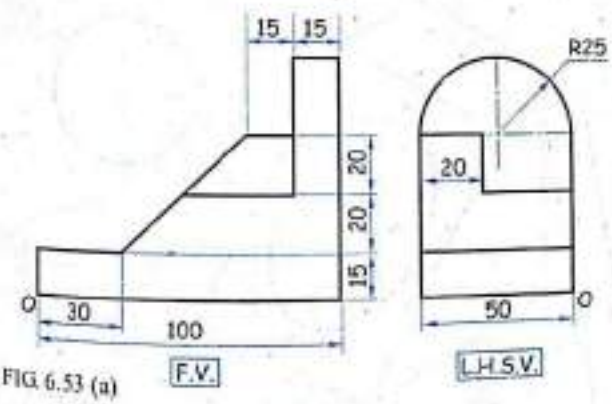

FIG. 6.53 (a)

Solution

Refer figure 6.53 (b).

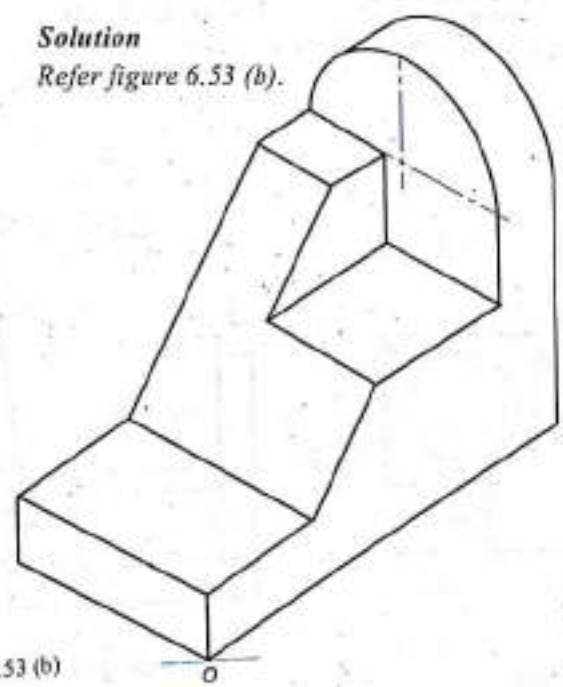

FIG. 6.53 (b)

Scanned by CamScanner

Problem 31

Figure 6.54 (a) shows F.V. and T.V. of an object. Draw the isometric view of the given object using natural scale. Taking *O* as the origin. ***(Nov. '96, M.U)***

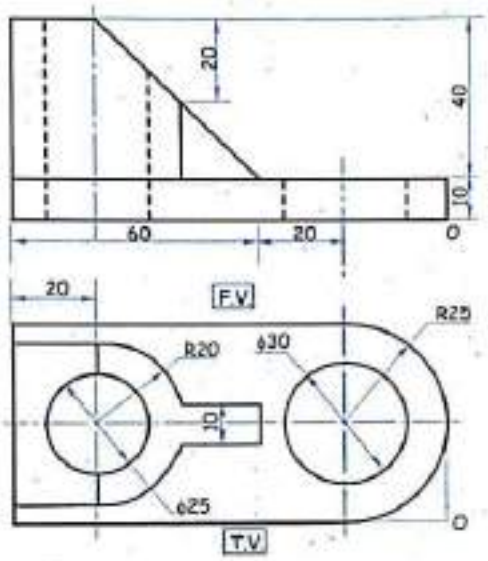

FIG. 6.54 (a)

Solution

Refer figure 6.54 (b).

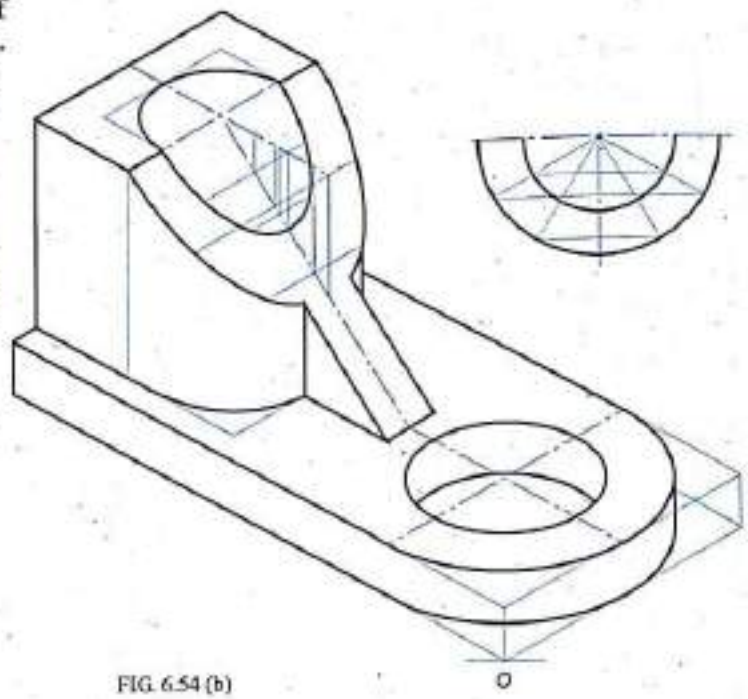

FIG. 6.54 (b)

Problem 32

Figure 6.55(a) shows F.V. and L.H.S.V. of an object. Draw the isometric view of the object using natural scale. Take *O* as the origin. ***(May '97, M.U.)***

Solution

Refer figure 6.55(b).

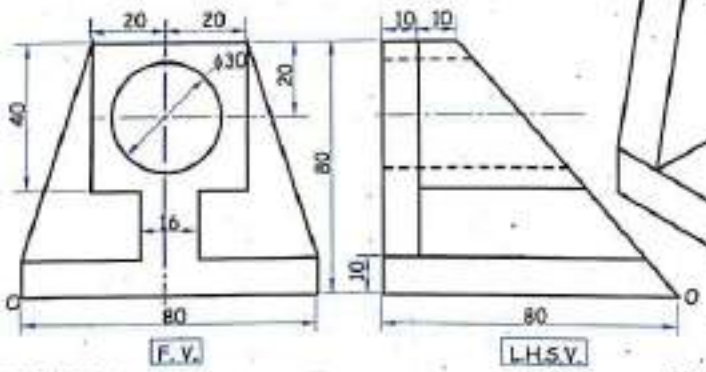

FIG. 6.55 (a)

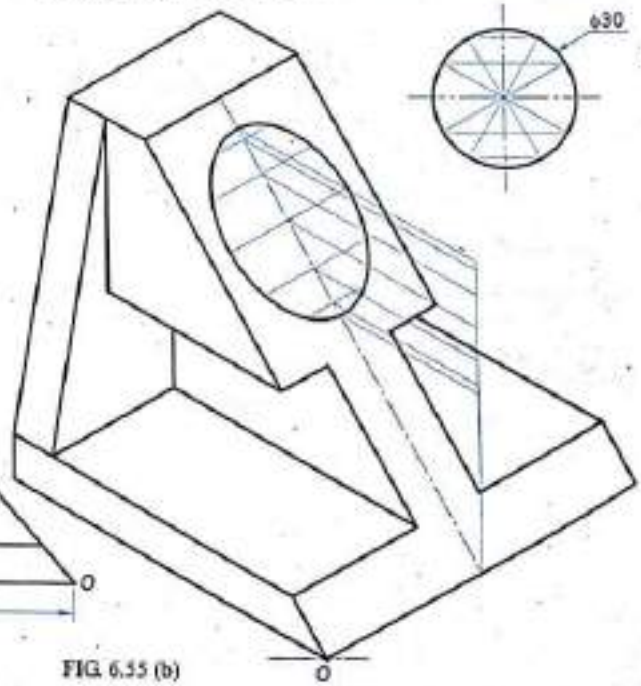

FIG. 6.55 (b)

Scanned by CamScanner

Problem 33

Figure 6.56 (a) shows the orthographic views of a casting. Draw the isometric view of the casting.

(Dec. '98, M.U)

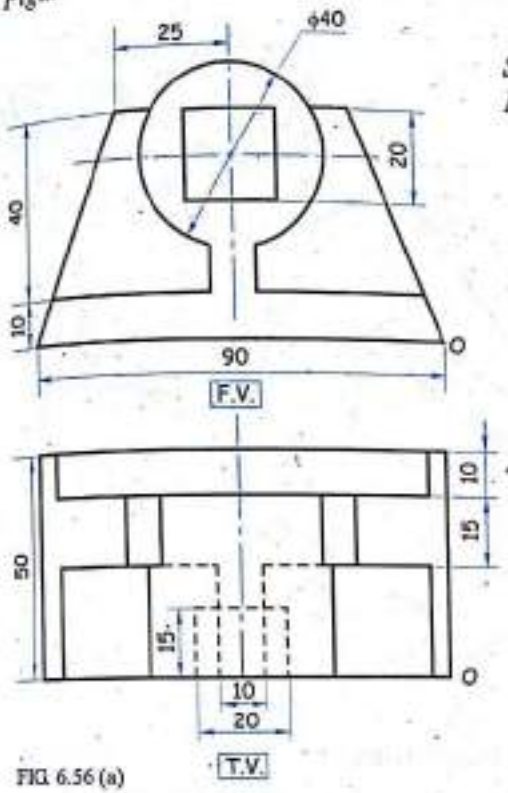

FIG. 6.56 (a)

Solution

Refer figure 6.56 (b).

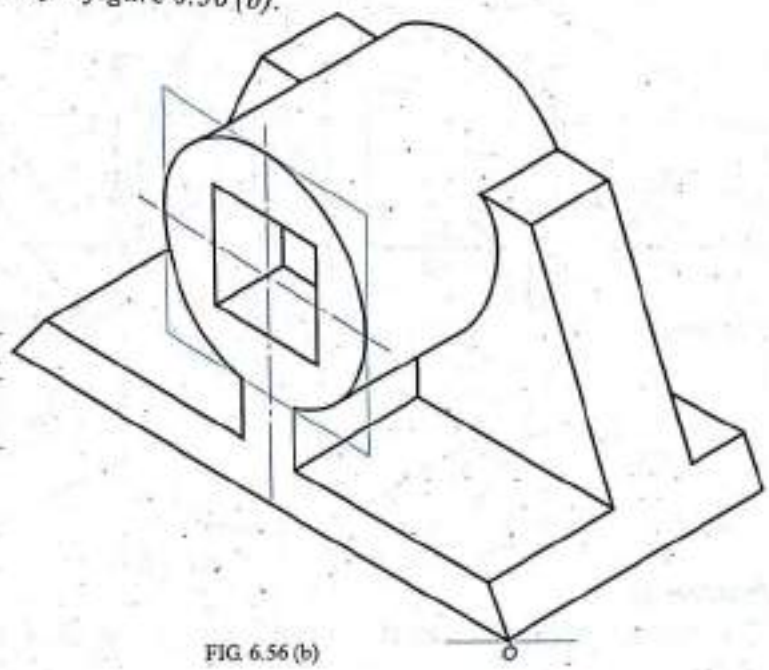

FIG. 6.56 (b)

Problem 34

Figure 6.57 (a) shows front view of an object. Draw the isometric view using natural scale and with O as reference point. ***(May '99, M.U)***

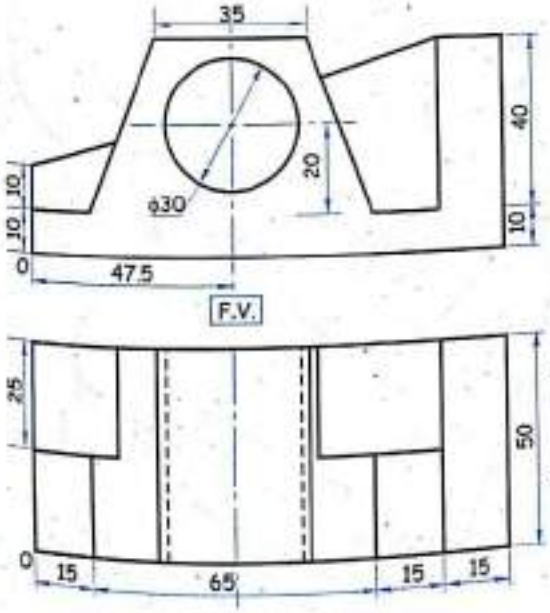

FIG. 6.57 (a)

Solution

Refer figure 6.57 (b).

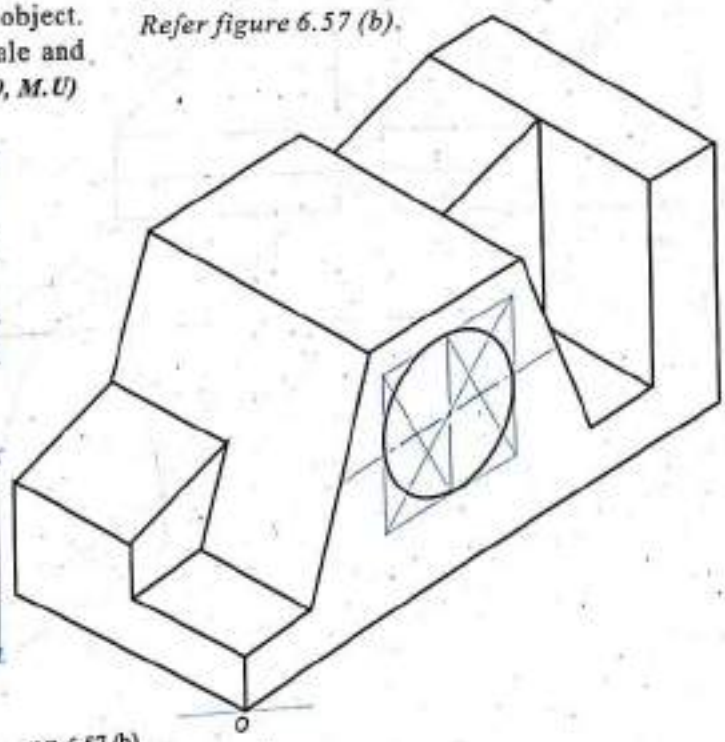

FIG. 6.57 (b)

Scanned by CamScanner

Problem 35

Figure 6.58 (a) shows the two views of an object. Draw the isometric view using natural scale. ***(May 2000, M.U.)***

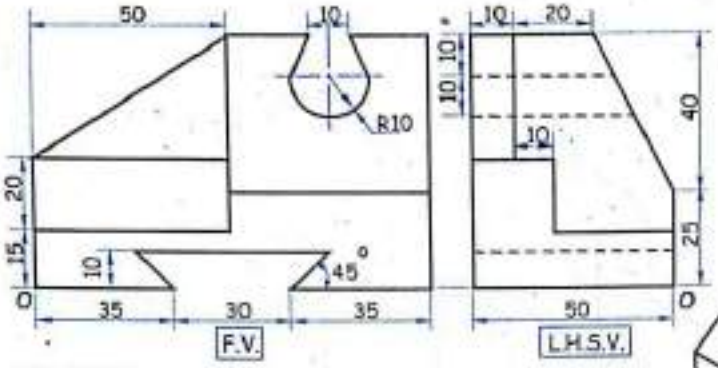

FIG. 6.58 (a)

Solution

Refer figure 6.58 (b).

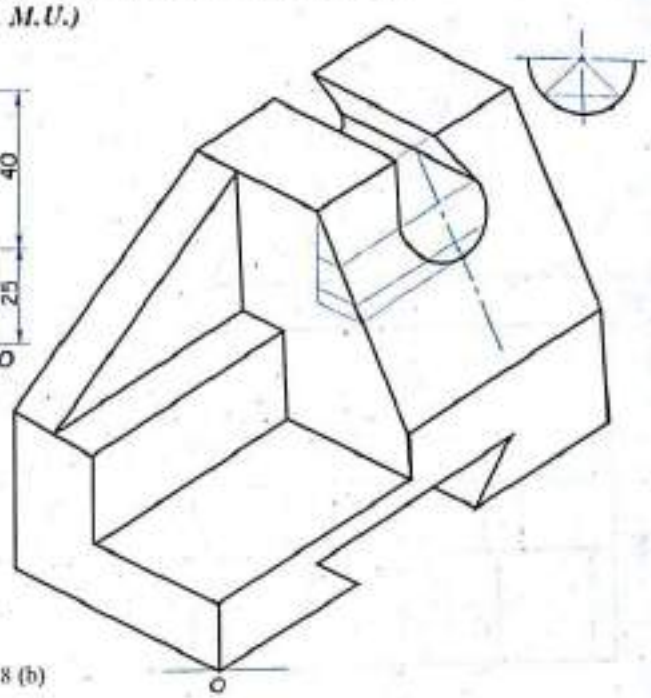

FIG. 6.58 (b)

Problem 36

Refer figure 6.59 (a) and draw the isometric view of the given object using natural scale. ***(Dec. 2000, M.U)***

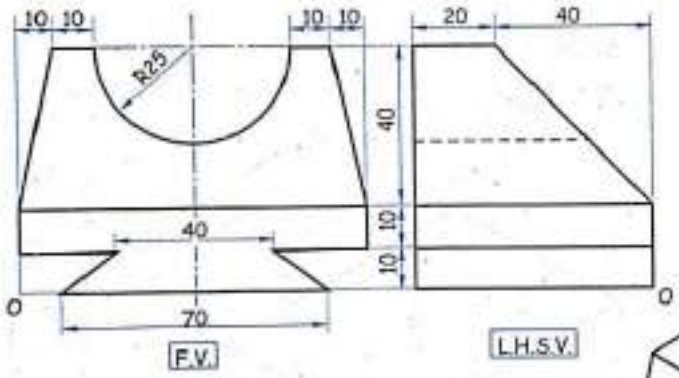

FIG. 6.59 (a)

Solution

Refer figure 6.59 (b).

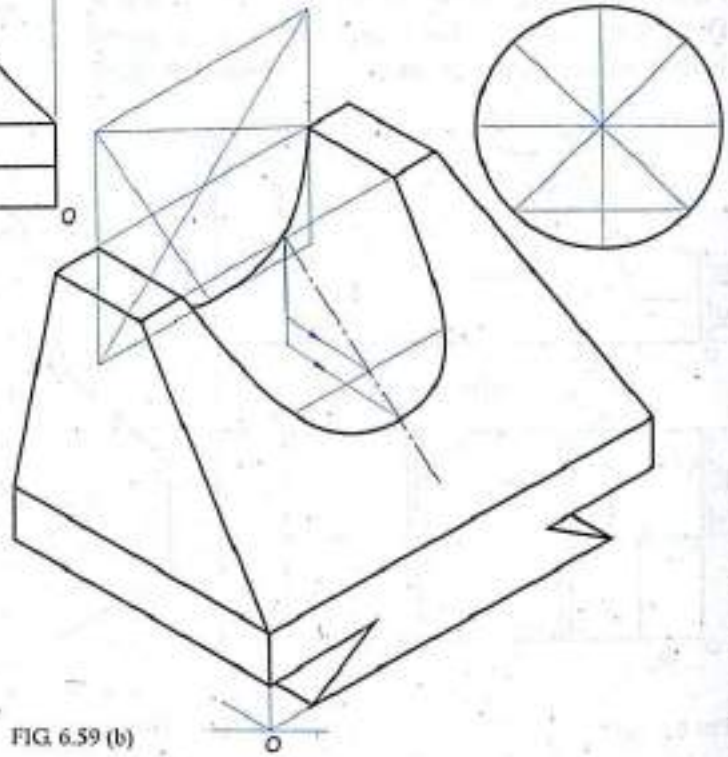

FIG. 6.59 (b)

Scanned by CamScanner

Problem 37

Figure 6.60 (a) shows F.V. and L.H.S.V. of an object. Draw the isometric view of the object using natural scale.

(Dec. '01, M.U.)

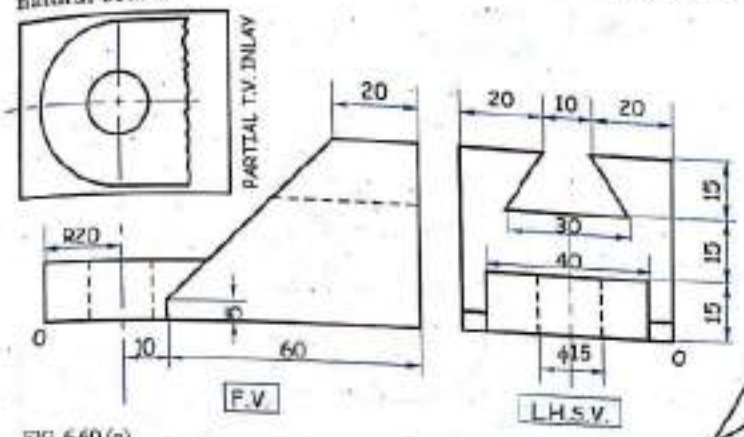

FIG. 6.60 (a)

Solution

Refer figure 6.60 (b).

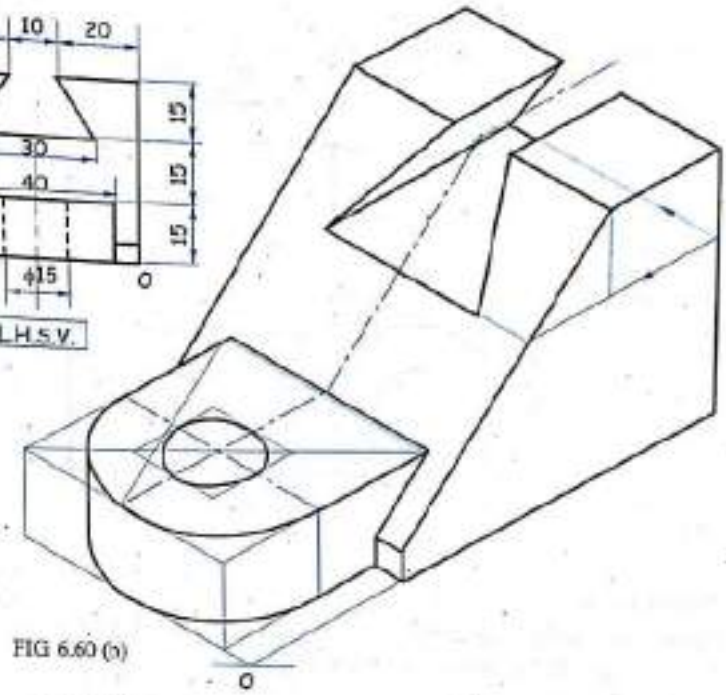

FIG 6.60 (b)

Problem 38

Figure 6.61 (a) shows F.V. and T.V. of an object. Draw the isometric view of the object using natural scale.

(June '01, M.U.)

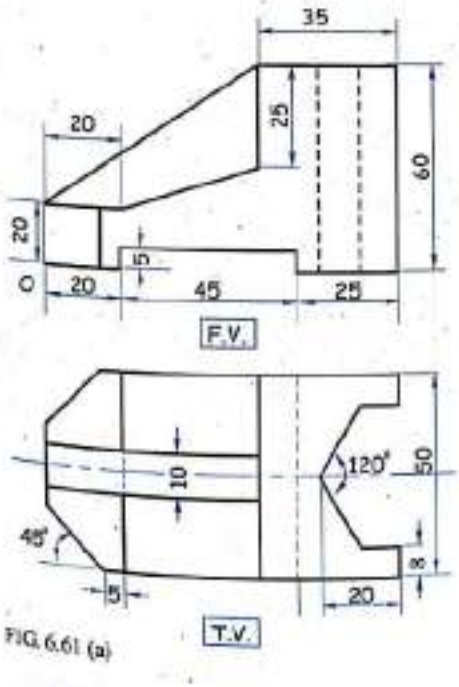

FIG. 6.61 (a)

Solution

Refer figure 6.61 (b).

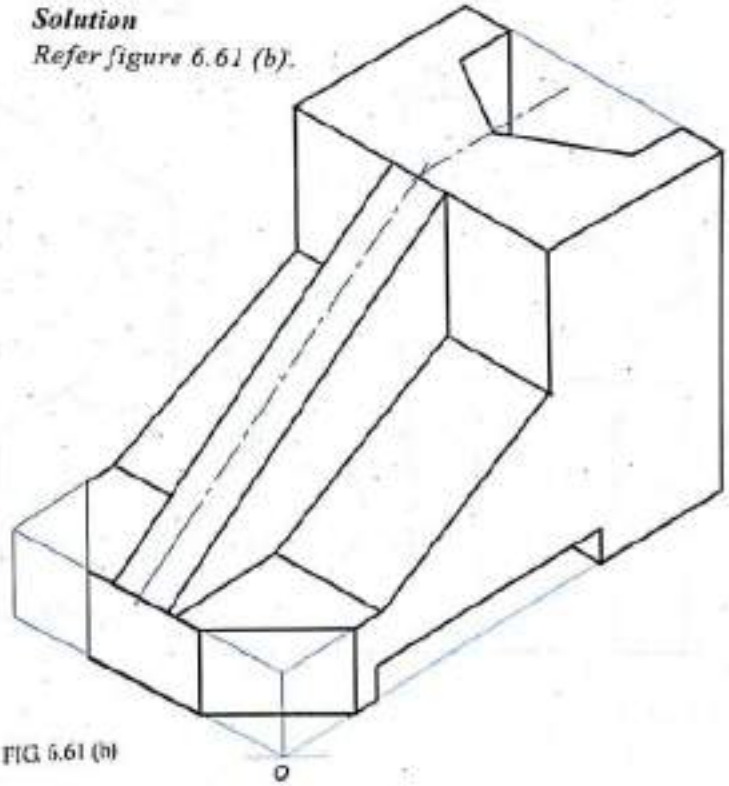

FIG. 6.61 (b)

Scanned by CamScanner

Problem 39

Left side view in section *B-B*. *Figure 6.62 (a)* shows three views of Bearing Bracket in first angle projection method. Draw isometric drawing. Use natural scale. ***(July '02, M.U.)***

Solution

Refer figure 6.62 (b).

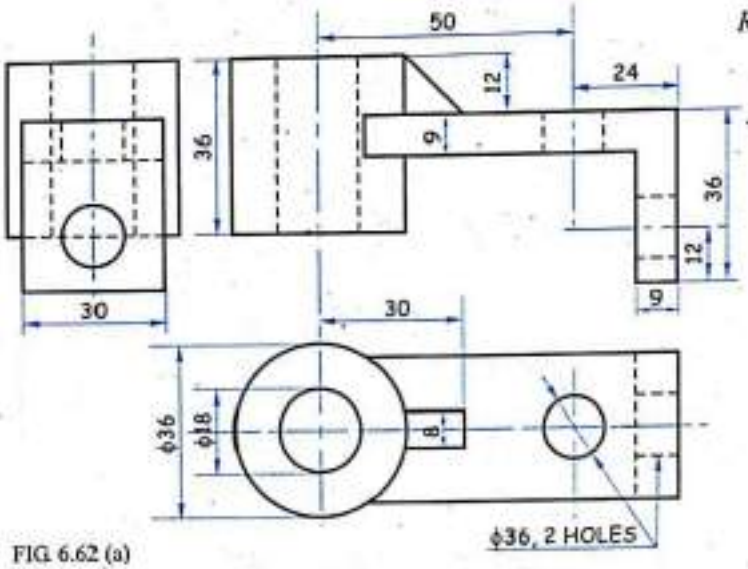

FIG. 6.62 (a)

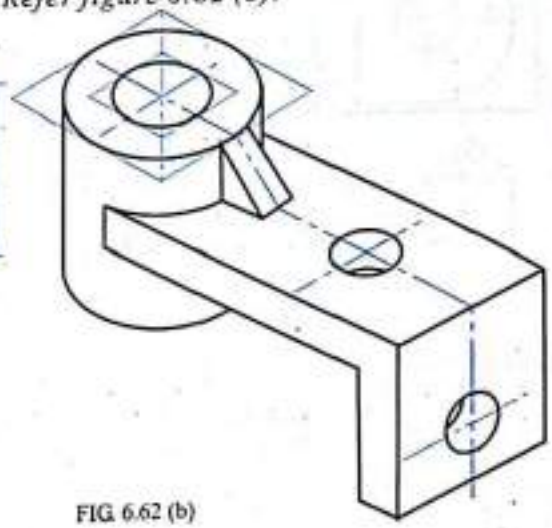

FIG. 6.62 (b)

Problem 40

Draw isometric projection of the object shown in *figure 6.63 (a)*. Do not show hidden lines and dimensions. [Use isometric scale only]. ***(May '03, M.U.)***

Solution

Refer figure 6.63 (b).

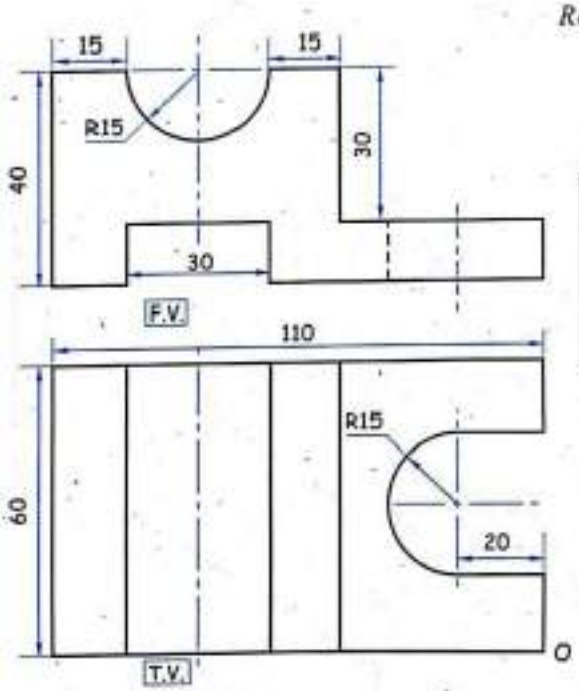

FIG. 6.63 (a)

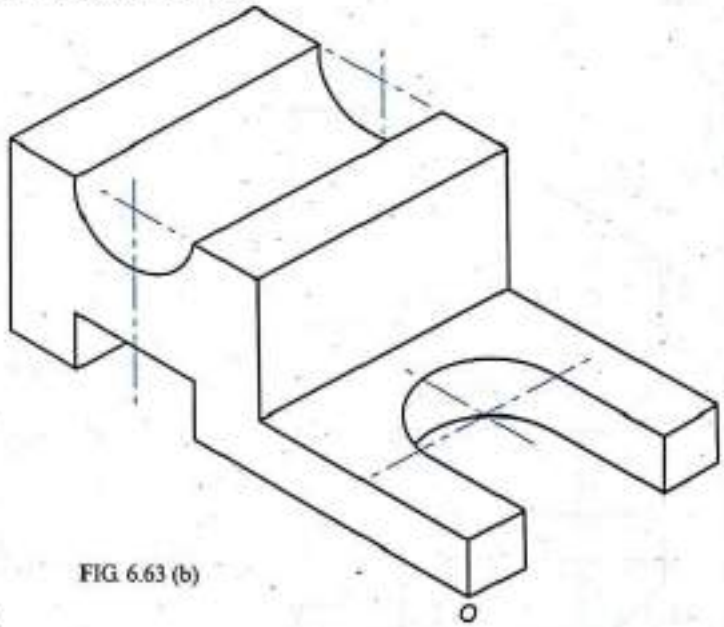

FIG. 6.63 (b)

Scanned by CamScanner

Problem 41

The *figure 6.64 (a)* shows front view and left hand side view of a Machine Part. Draw its isometric drawing. Use natural scale.

(Dec. '03, M.U.)

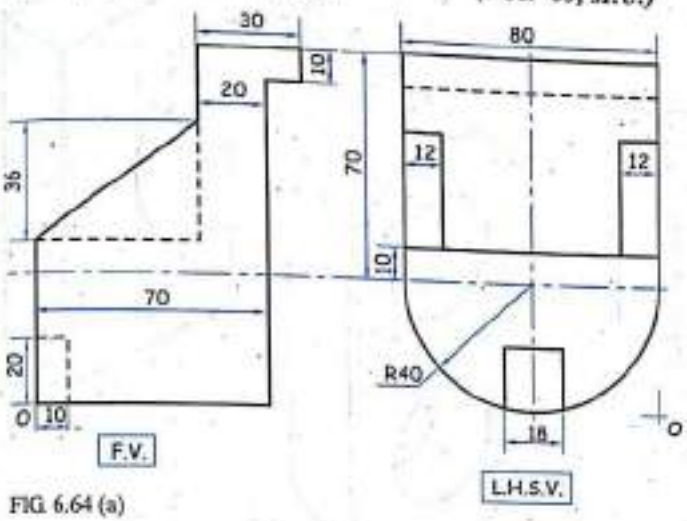

FIG. 6.64 (a)

Solution

Refer figure 6.64 (b).

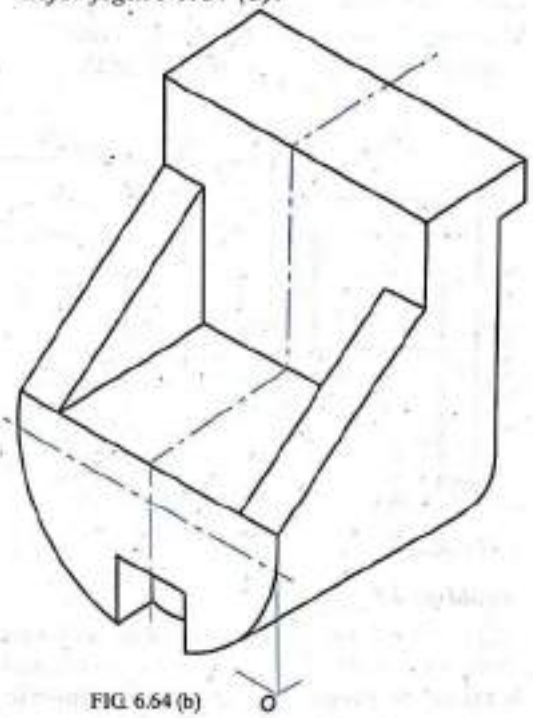

FIG. 6.64 (b)

Problem 42

Figure 6.65 (a) shows two views of a machine part. Draw isometric view, using the isometric scale.

(Nov. '04, M.U.)

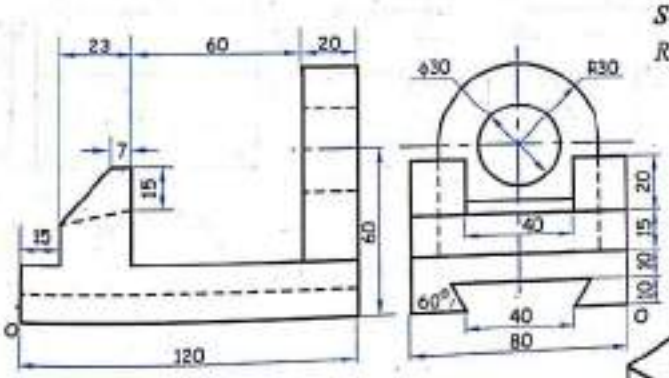

FIG. 6.65 (a)

Solution

Refer figure 6.65 (b).

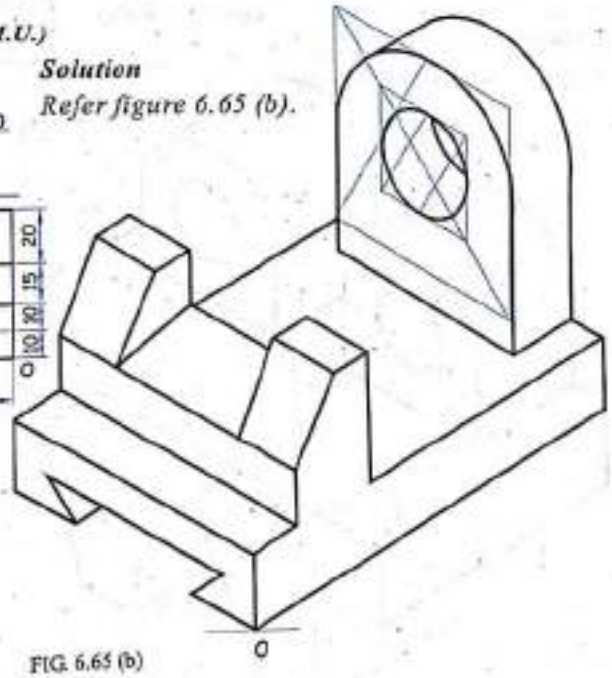

FIG. 6.65 (b)

Scanned by CamScanner

Problem 43

Figure 6.66 (a) below shows front view and left hand side view of Machine Part. Draw isometric view using natural scale. ***(June '05, M.U.)***

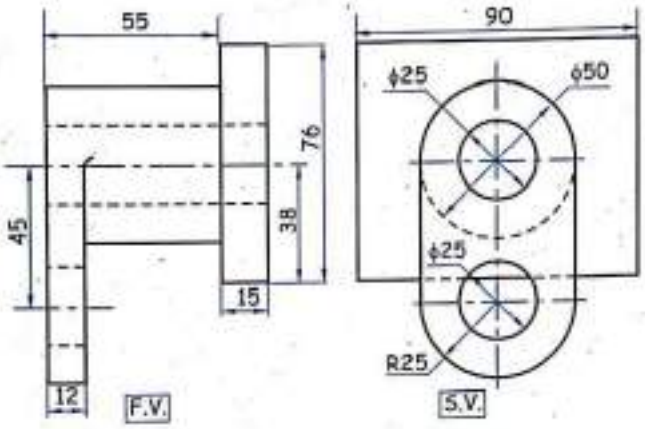

FIG. 6.66 (a)

Solution

Refer figure 6.66 (b).

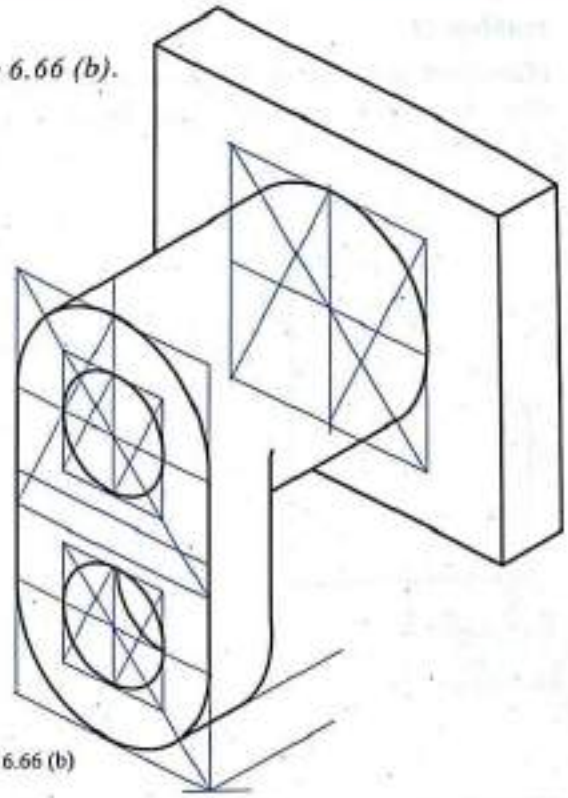

FIG. 6.66 (b)

Problem 44

Figure 6.67 (a) shows elevation and end view of a RACK according to first angle method of projection. Draw its isometric view. (Retain all construction lines.)

(June '06, M.U.)

Solution

Refer figure 6.67 (b).

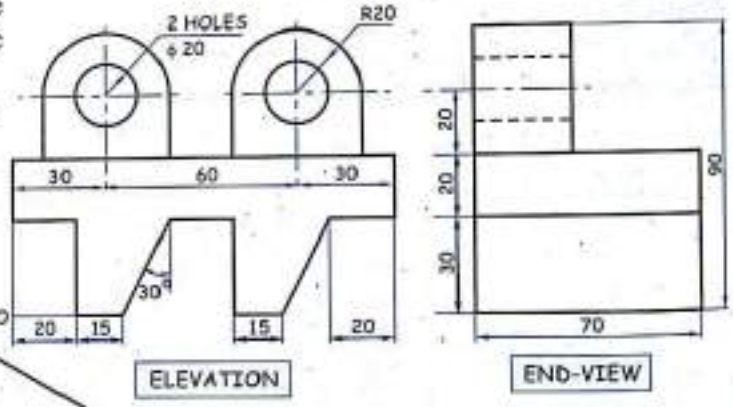

FIG. 6.67 (a)

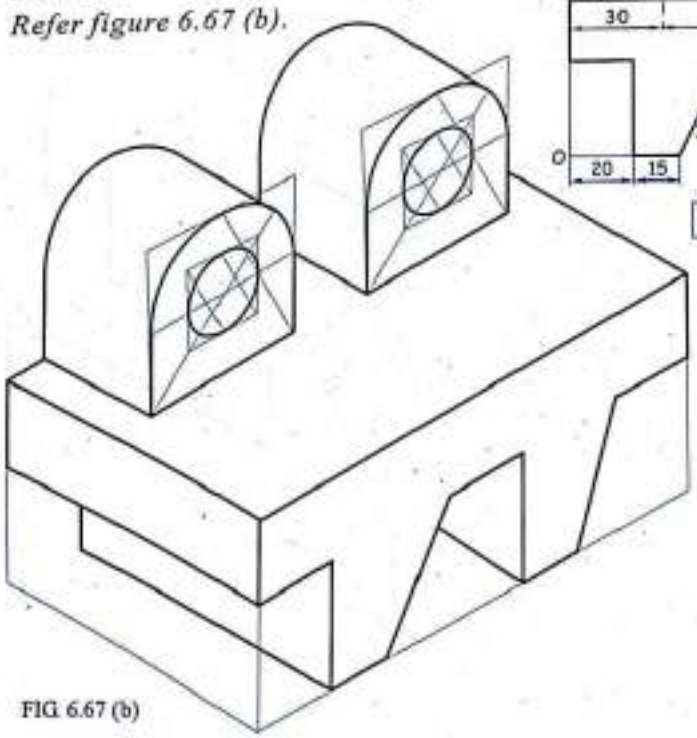

FIG. 6.67 (b)

Scanned by CamScanner

Problem 45

Two orthographic views of an object are given in *figure 6.68 (a)* by first angle method. Draw an isometric view taking *O* as origin. Use natural scale.

(June '04, Dec. '07, M.U.)

Solution

Refer figure 6.68 (b).

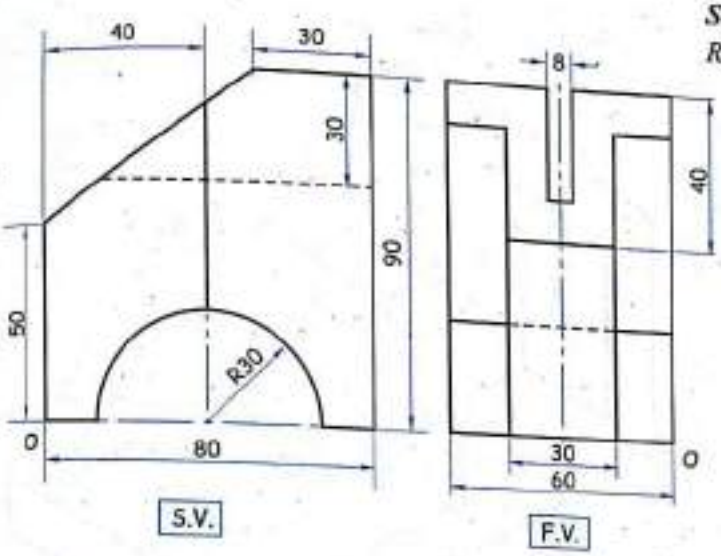

FIG. 6.68 (a)

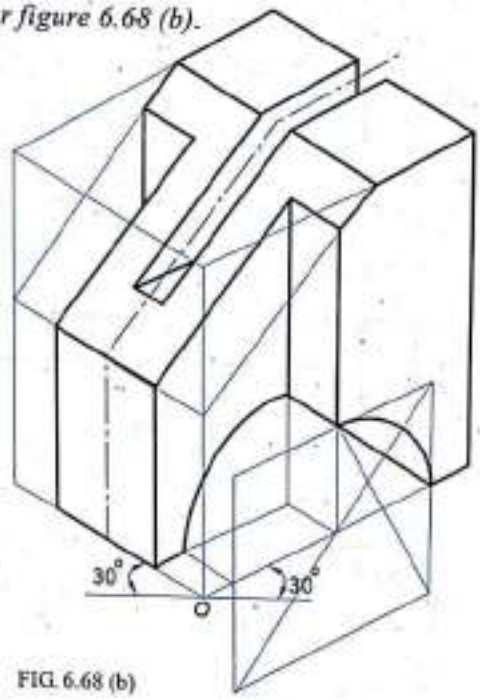

FIG. 6.68 (b)

Problem 46

Draw isometric view of the following object using natural scale.

(May '08, M.U.)

Solution

Refer figure 6.69 (b).

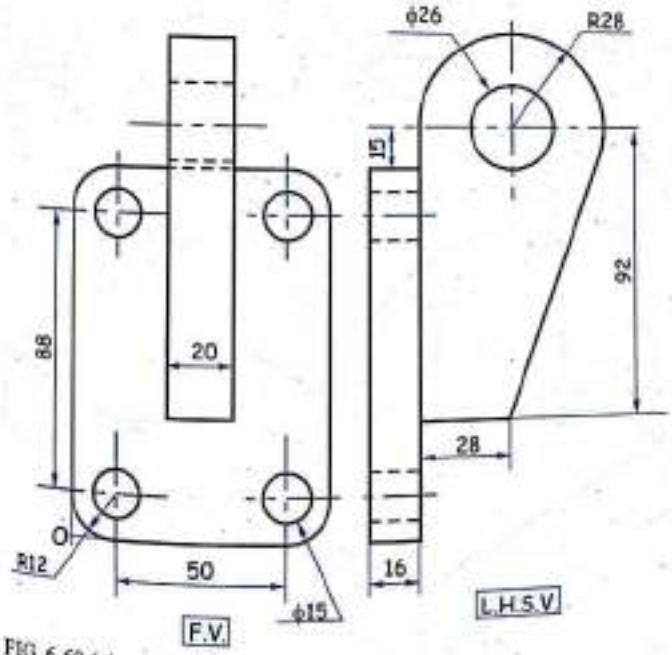

FIG. 6.69 (a)

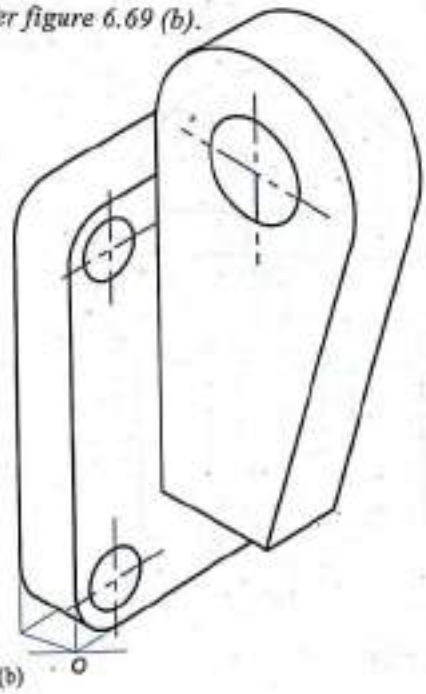

FIG. 6.69 (b)

Scanned by CamScanner

Problem 47

Two orthographic views of an object are given in *figure 6.70 (a)* by first angle method. Draw an isometric view taking *O* as origin. Use natural scale. ***(Dec. '08, M.U.)***

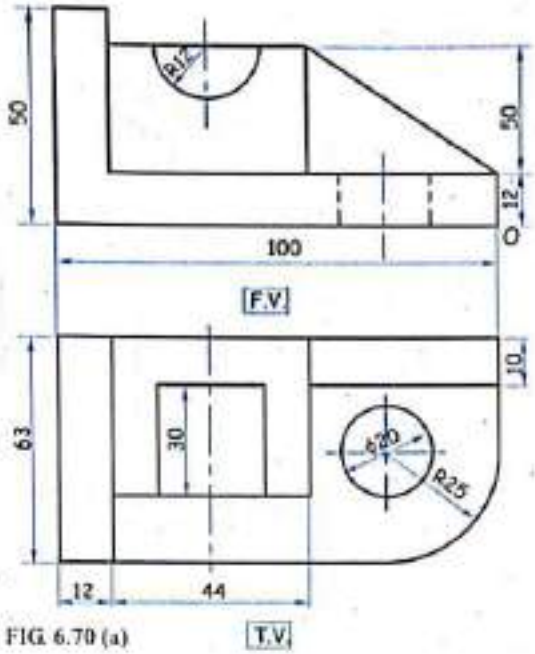

FIG. 6.70 (a)

Solution

Refer figure 6.70 (b).

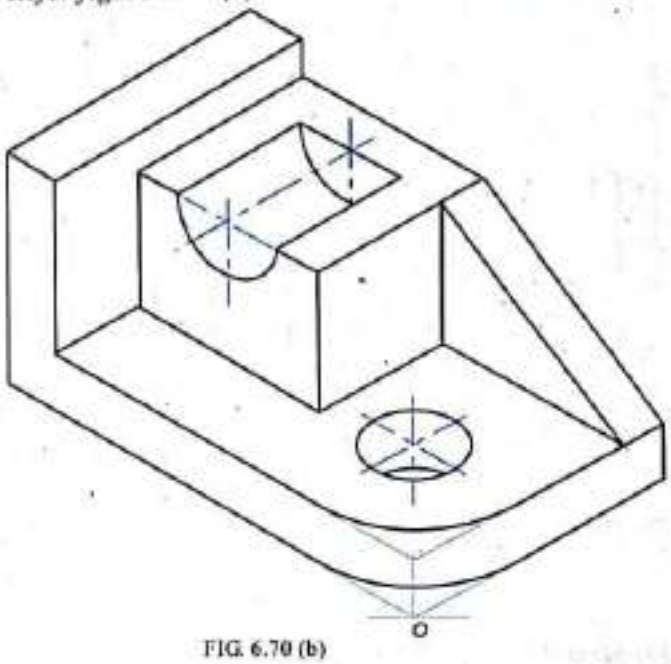

FIG. 6.70 (b)

Problem 48

Refer *figure 6.71 (a)*. Draw an isometric view of the following using natural scale. ***(May '09, M.U.)***

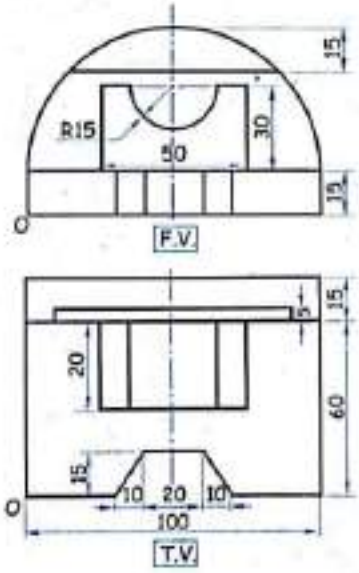

FIG. 6.71 (a)

Solution

Refer figure 6.71 (b).

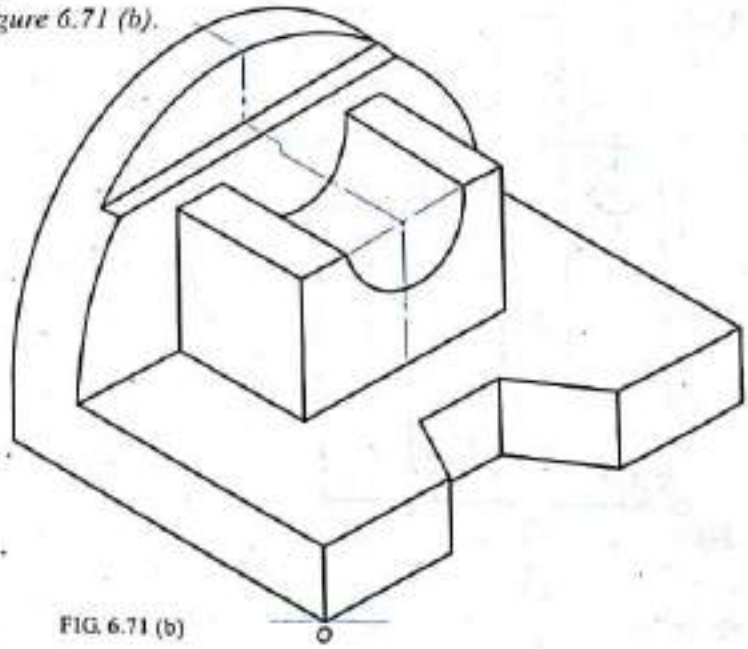

FIG. 6.71 (b)

Scanned by CamScanner

Problem 49

Draw an isometric view of the following using natural scale. Refer *figure 6.72 (a)*.

(Dec. '09, M.U.)

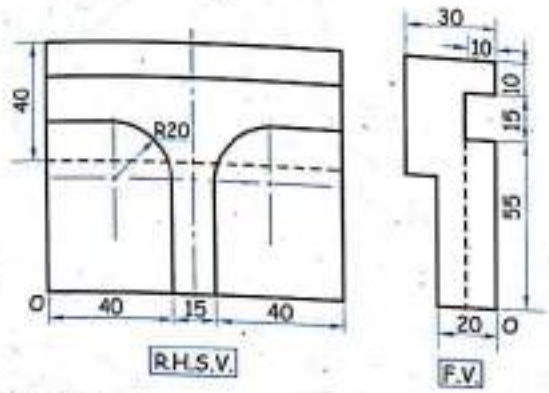

FIG. 6.72 (a)

Solution

Refer figure 6.72 (b).

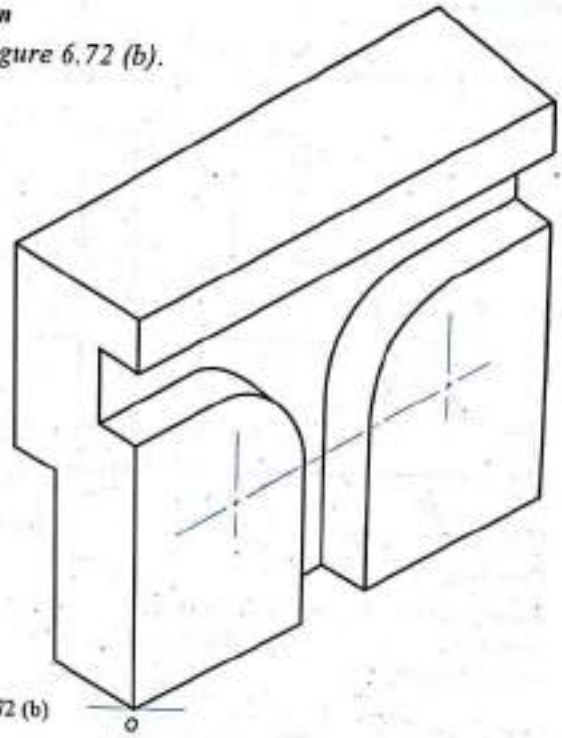

FIG. 6.72 (b)

Problem 50

Draw an isometric view of the following object using natural scale.

(May '10, M.U.)

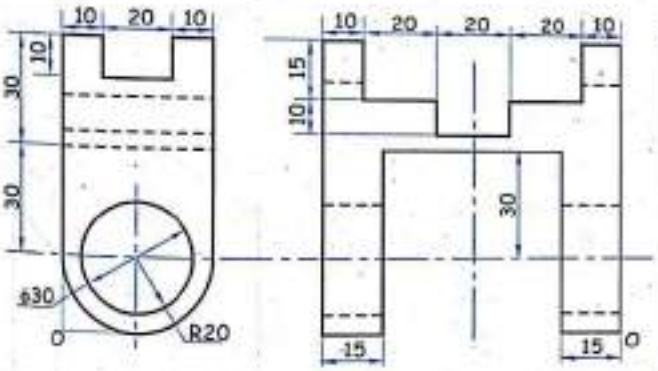

FIG. 6.73 (a)

Solution

Refer figure 6.73 (b).

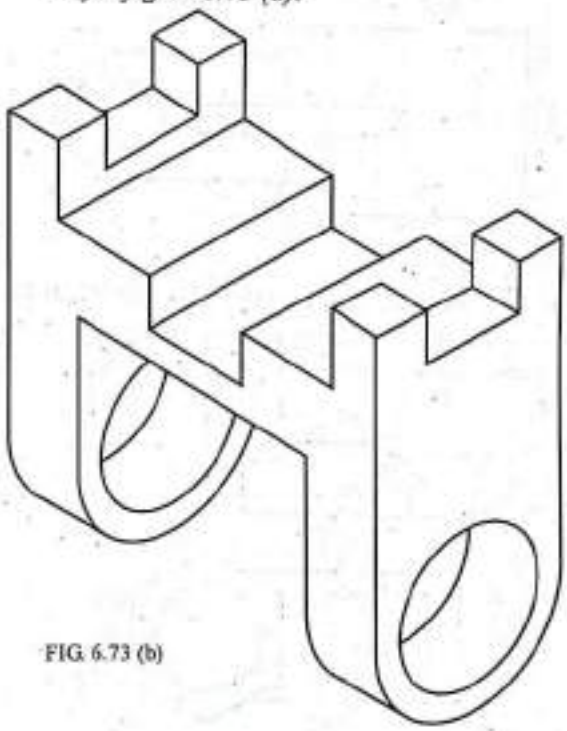

FIG. 6.73 (b)

Scanned by CamScanner

Problem 51

Draw an isometric view of the object two views of which are shown in *figure 6.74 (a)*. Use natural scale. ***(Dec. '10, M.U.)***

Solution

Refer figure 6.74 (b).

FIG. 6.74 (a)

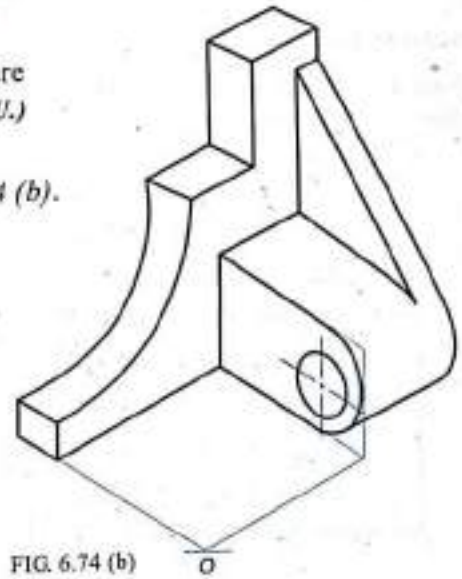

FIG. 6.74 (b)

Problem 52

Refer given *figure 6.75 (a)*. Draw an isometric view of the following using natural scale. ***(May '11, M.U.)***

Solution : *Refer figure 6.75 (b).*

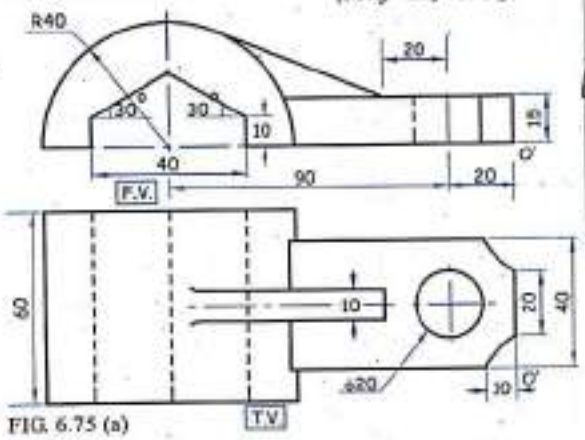

FIG. 6.75 (a)

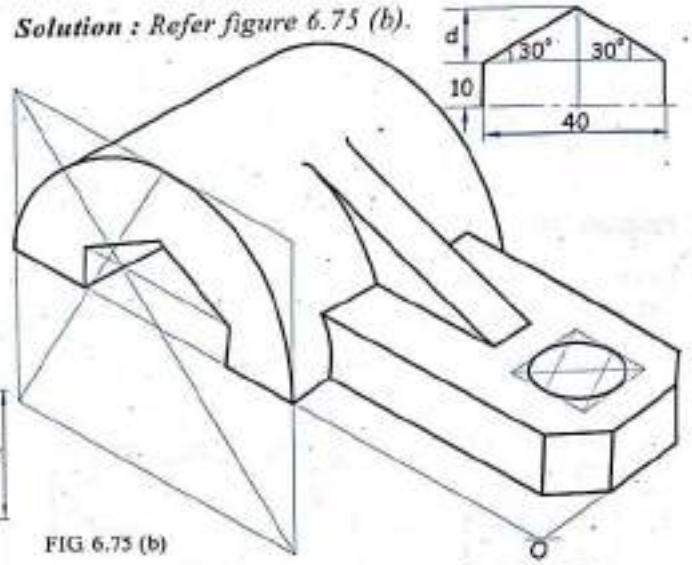

FIG. 6.75 (b)

Problem 53

Draw an isometric view of the following object using natural scale. ***(Dec. '11, May '12, M.U.)***

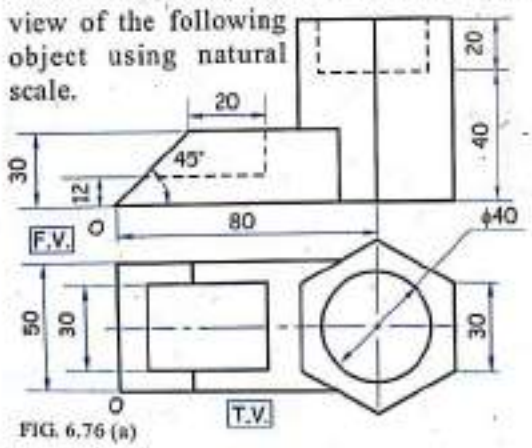

FIG. 6.76 (a)

Solution

Refer figure 6.76 (b).

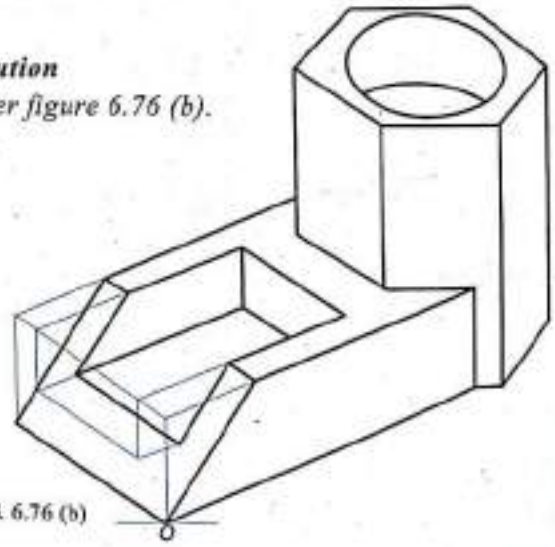

FIG. 6.76 (b)

Scanned by CamScanner

6.18 Exercise

Two orthographic views are given . Draw the isometric view using natural scale. Take *O* as origin.

①

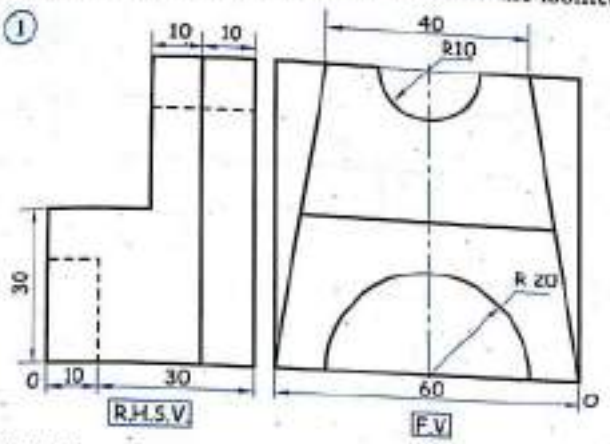

FIG. 6.77

②

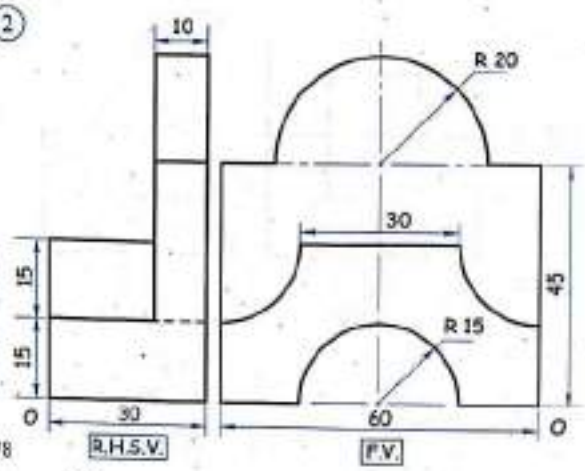

FIG. 6.78

③

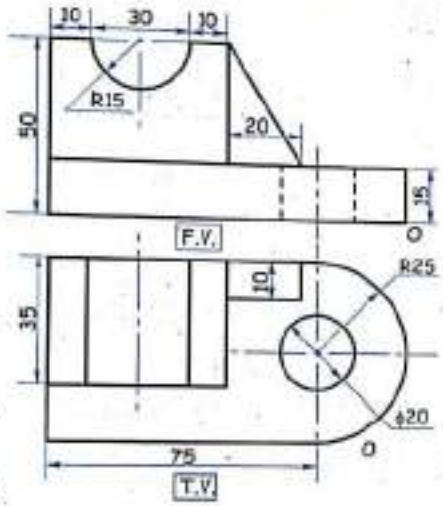

FIG. 6.79

④

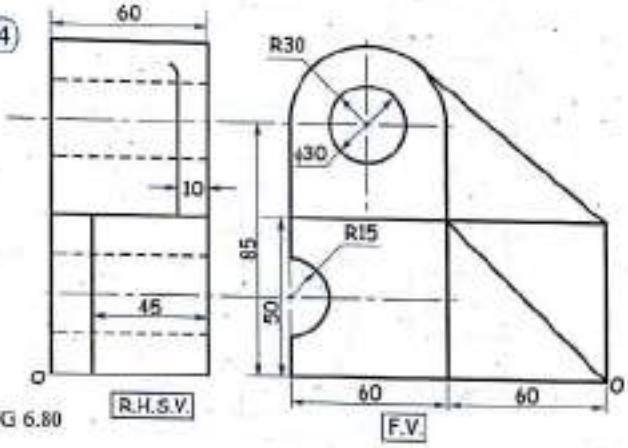

FIG. 6.80

⑤

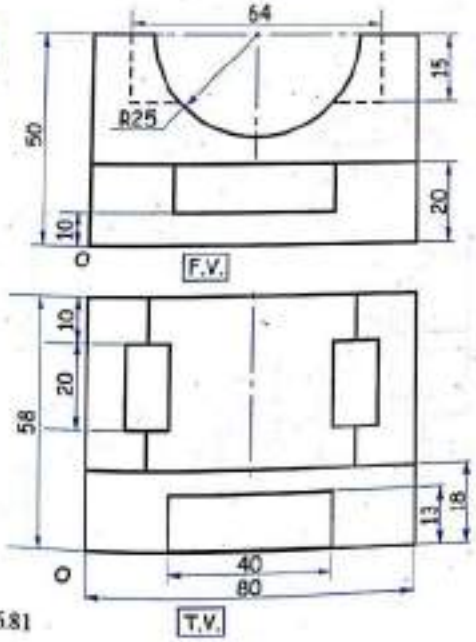

FIG. 6.81

⑥

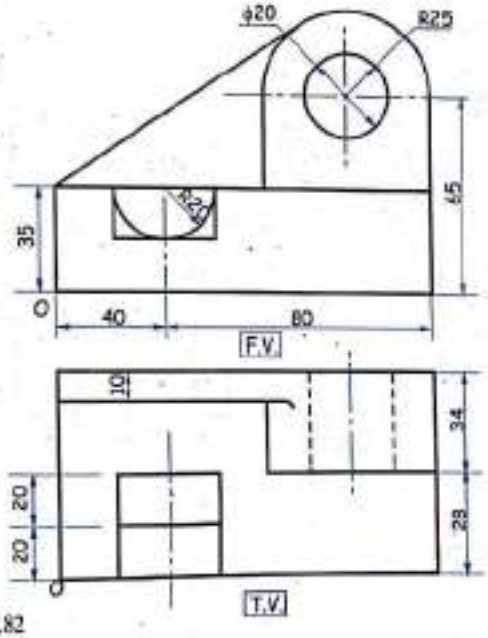

FIG. 6.82

Scanned by CamScanner

(7)

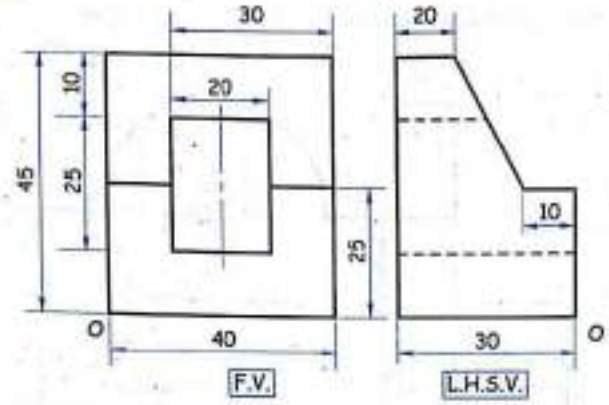

FIG. 6.83

(8)

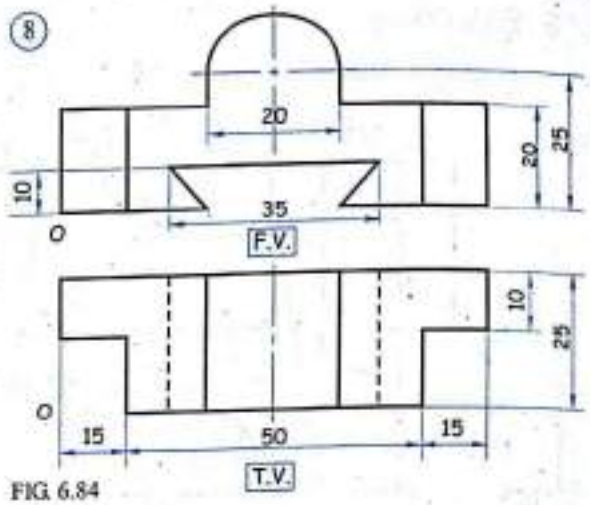

FIG. 6.84

(9)

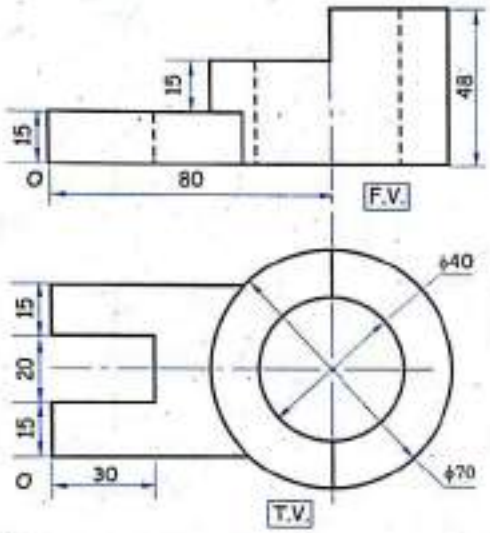

FIG. 6.85

(10)

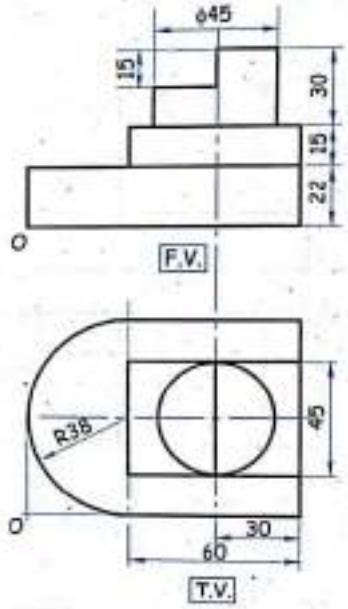

FIG. 6.86

(11)

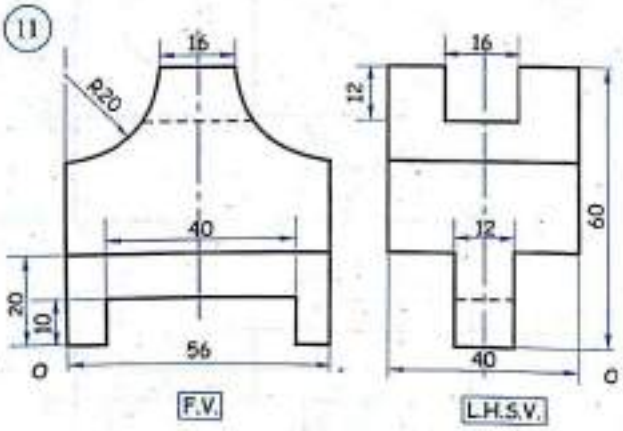

FIG. 6.87

(12)

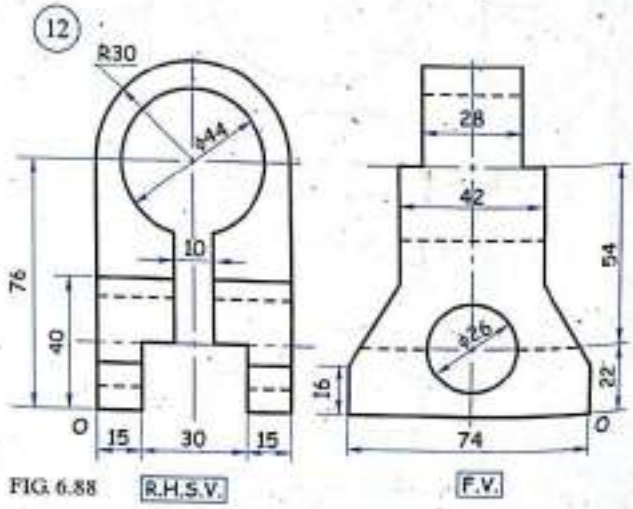

FIG. 6.88

Scanned by CamScanner

(13)

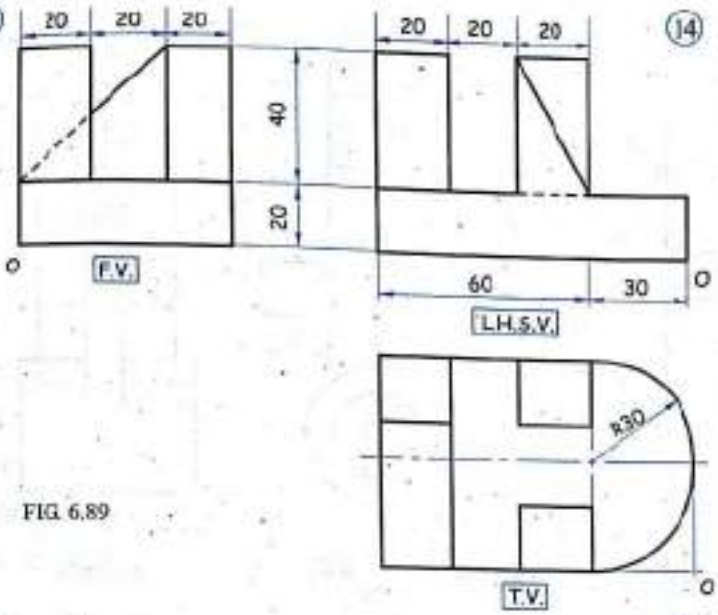

FIG. 6.89

(14)

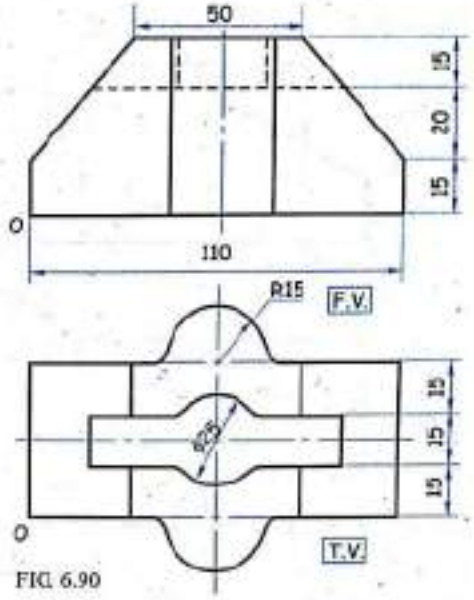

FIG. 6.90

(15)

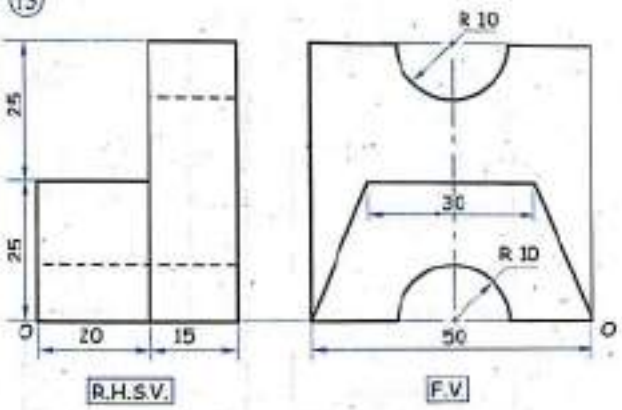

FIG. 6.91

(16)

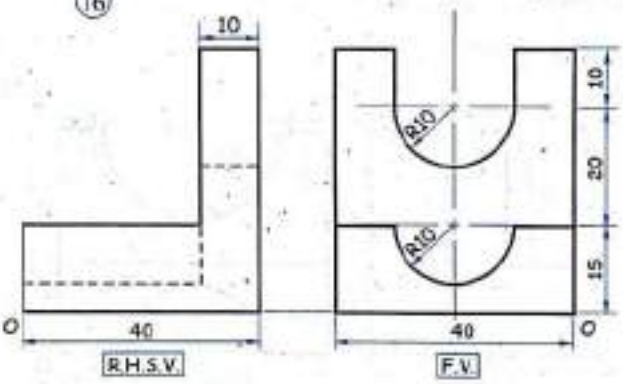

FIG. 6.92

(17)

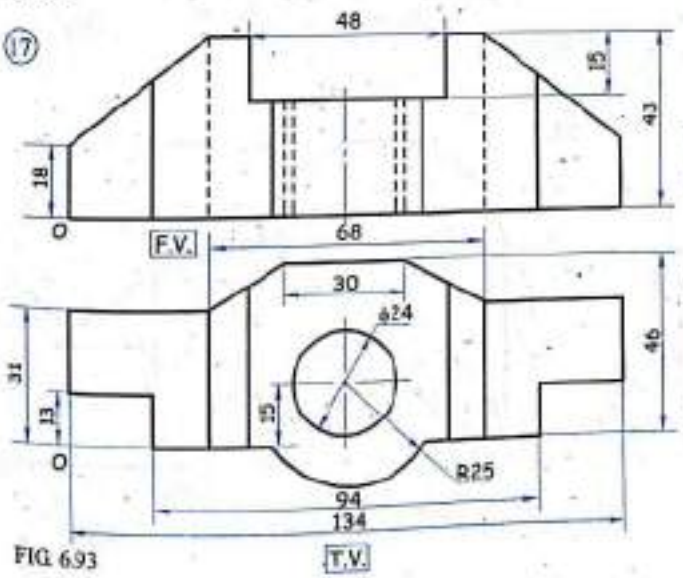

FIG. 6.93

(18)

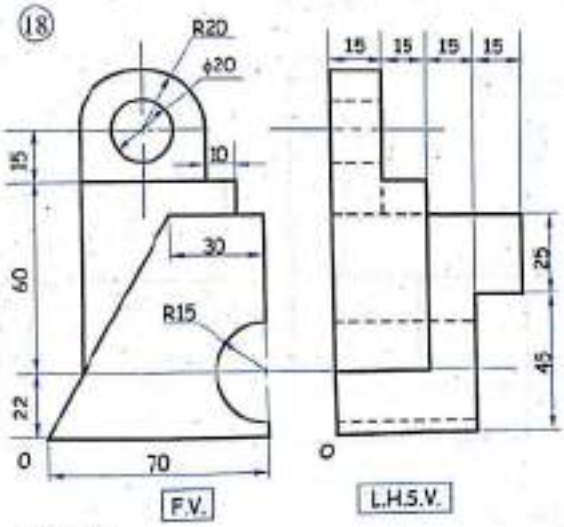

FIG. 6.94

Scanned by CamScanner

(19)

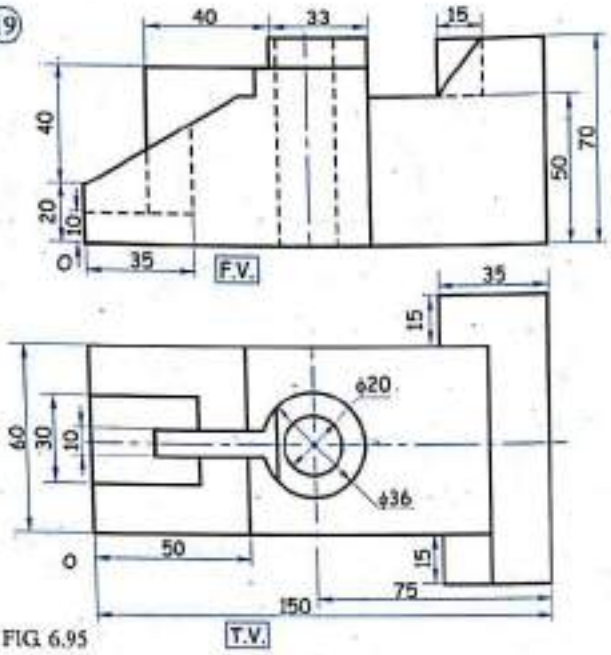

FIG. 6.95

(20)

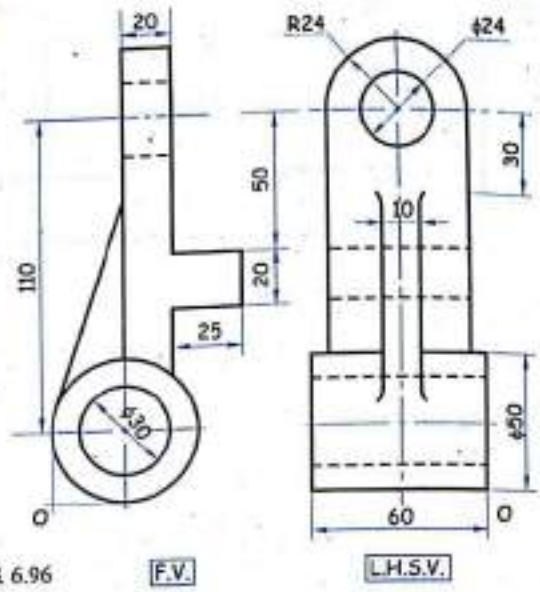

FIG. 6.96

(21)

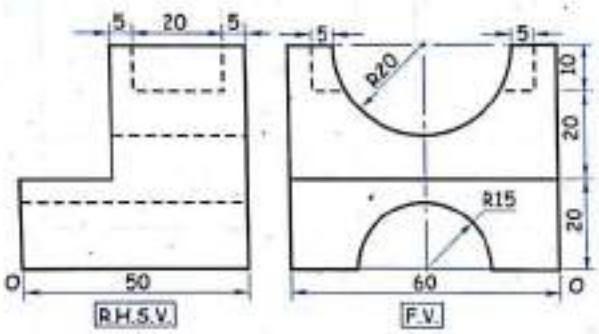

FIG. 6.97

(22)

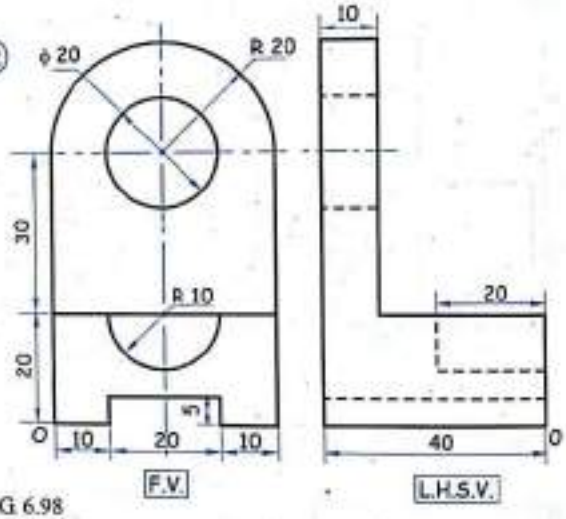

FIG. 6.98

(23)

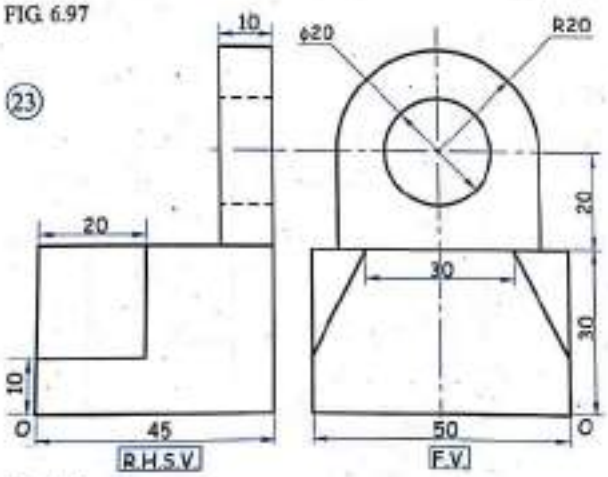

FIG. 6.99

(24)

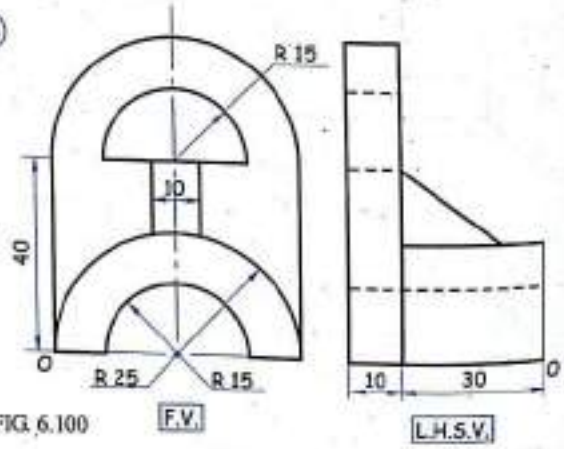

FIG. 6.100

Scanned by CamScanner

(25)

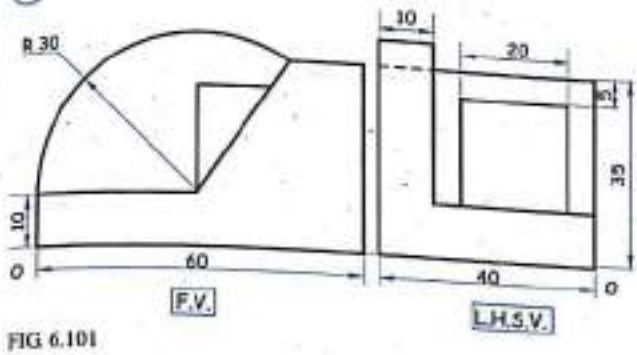

FIG 6.101

(26)

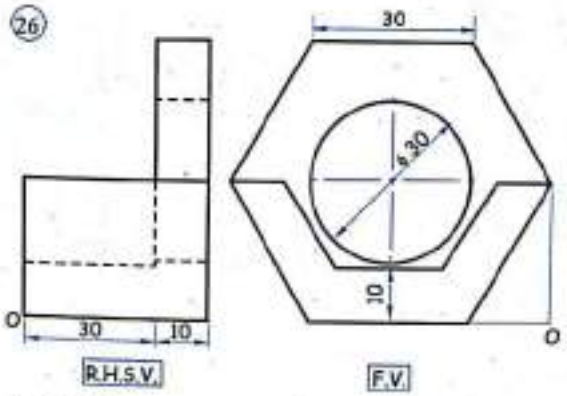

FIG 6.102

(27)

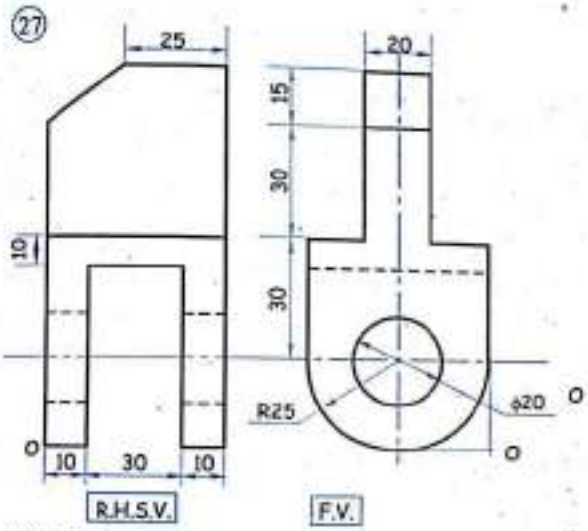

FIG 6.103

(28)

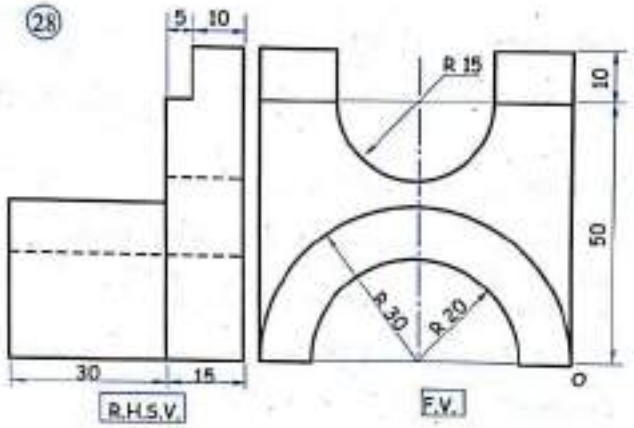

FIG 6.104

(29)

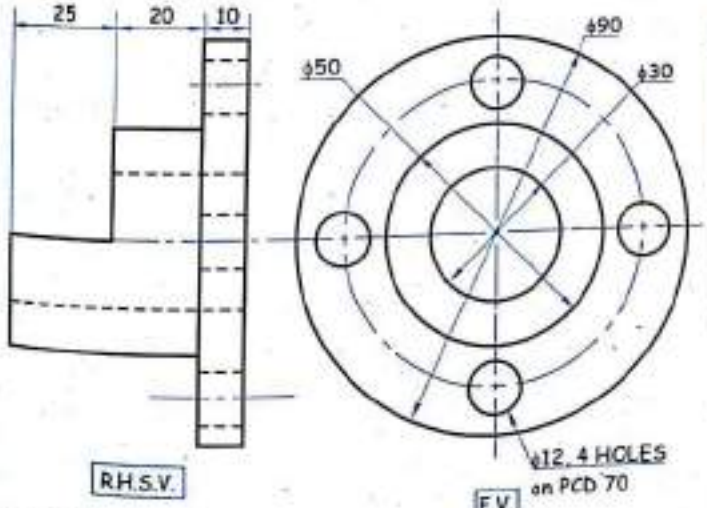

FIG 6.105

(30)

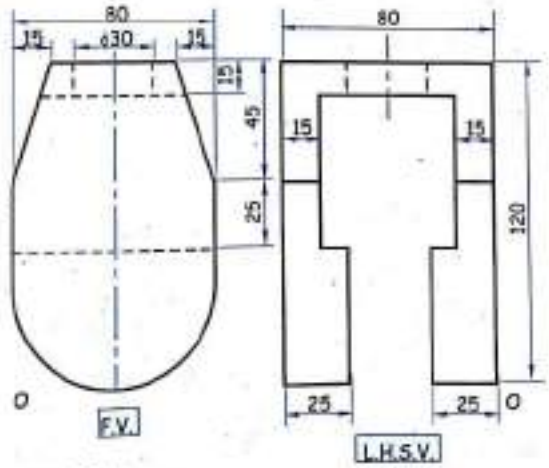

FIG 6.106

Scanned by CamScanner

7 PROJECTIONS OF POINTS

7.1 Introduction

In geometry, a point is defined as having position without magnitude. Point is represented as a dot.

7.2 Position of Point

A point may be situated in space in any of the four quadrant or may lie on any one of the principal plane, or in both principal planes (i.e. on the line of intersection of a plane). These NINE positions of a point are discussed in this chapter.

7.3 Position of Point in First Quadrant

Problem 1

Draw the projection of a point *A* which is 10 mm above the H.P. and 20 mm in front of the V.P.

Solution

Refer figure 7.1.

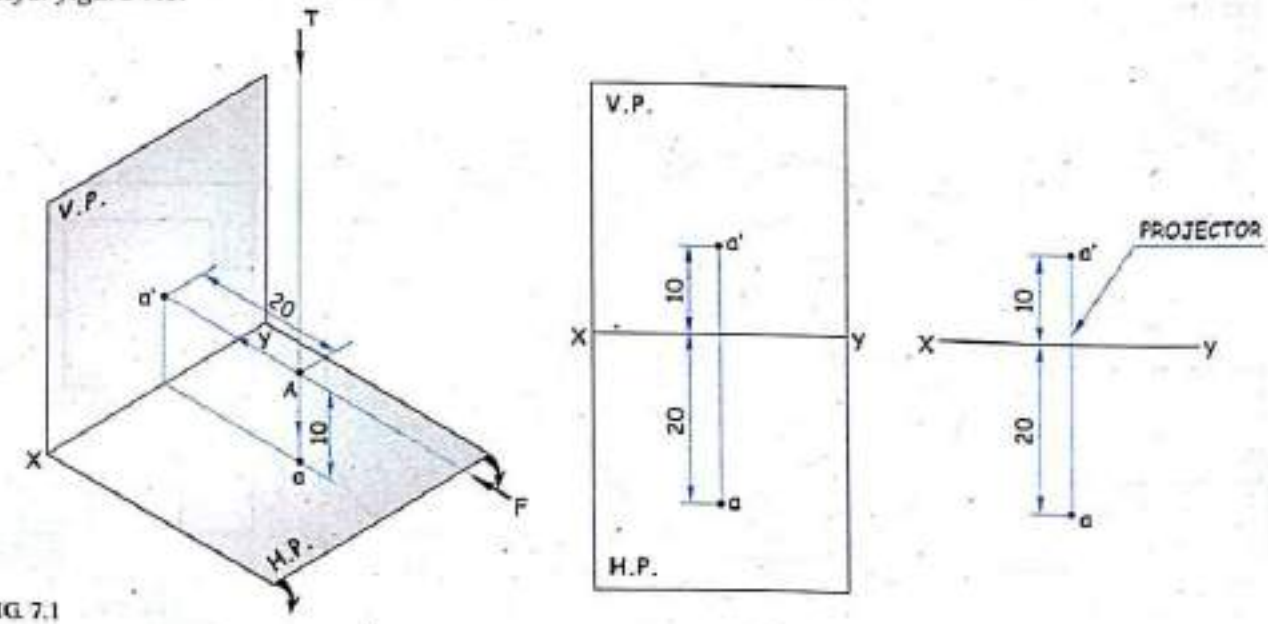

FIG. 7.1

1. Point *A* is situated in the first quadrant 10 mm above the H.P. and 20 mm in front of the V.P.

Scanned by CamScanner

2. F.V. of point A is obtained by projecting the point A in the direction of viewing F. Projector through point A is horizontally forward till the projector touches the V.P. at a' (F.V. of point A).
3. T.V. is obtained viewing in direction T vertically down till the projector touches the H.P. at a (T.V. of point A).
4. Orthographic projection of point A is obtained by turning H.P. in clockwise direction at 90°.
5. To construct orthographic projection of point A .
   (i) Draw the XY line.
   (ii) Draw projector perpendicular to the XY line.
   (iii) Locate F.V. a' on projector 10 mm above the XY line.
   (iv) Locate T.V. a on same projector 20 mm below the XY line.

7.4 Position of Point in Second Quadrant

Problem 2

Draw the projection of a point B, which is 10 mm above the H.P. and 20 mm behind the V.P.

Solution

Refer figure 7.2.

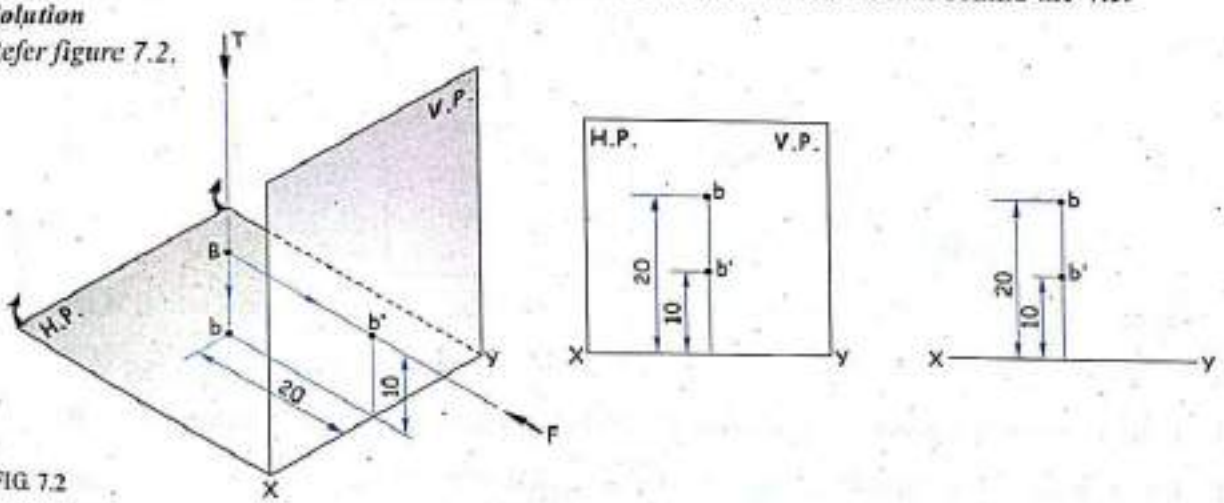

FIG. 7.2

1. Point B is situated in second quadrant 10 mm above the H.P. and 20 mm behind the V.P.
2. F.V. of point B is obtained by viewing in the direction of F till the projector touches the V.P. at b'. (Point B is projected on the V.P. assuming the V.P. to be transparent.)
3. T.V. of point B is obtained by viewing in the direction of T vertically down till the projector touches the H.P. at b.
4. An orthographic projection of point B is obtained by turning H.P. in the clockwise direction of 90°.
5. To construct orthographic projection of point B.
   (i) Draw the XY line.
   (ii) Draw projector perpendicular to the XY line.
   (iii) Locate F.V. b' on projector 10 mm above the XY line.
   (iv) Locate T.V. b on projector 20 mm above the XY line.

Scanned by CamScanner

7.5 Position of Point in Third Quadrant

Problem 3

A point C is 10 mm below the H.P. and 20 mm behind the V.P. Draw the projection of point C.

Solution

Refer figure 7.3.

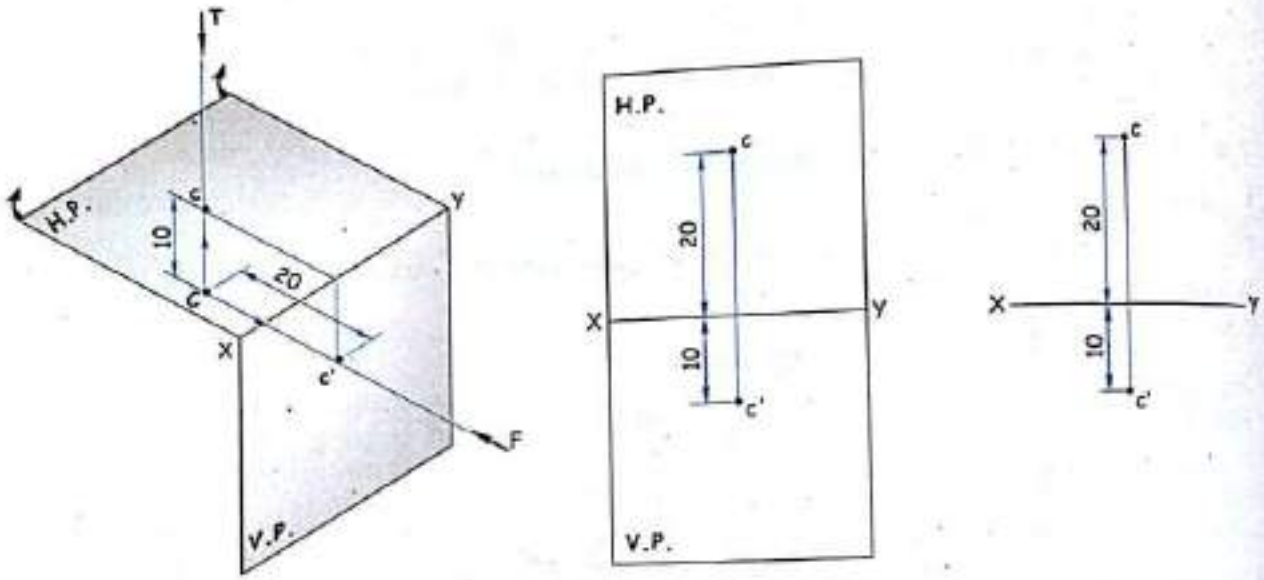

FIG. 7.3

1. Point C is situated in the third quadrant 10 mm below the H.P. and 20 mm behind the V.P.
2. F.V. of point C is obtained by viewing in the direction of F till the projector touches the V.P. at c'. (Point C is projected on the V.P. assuming the V.P. to be transparent.)
3. T.V. of point C is obtained by viewing in the direction of T till the projector touches the H.P. at c. (Point C is projected on the H.P. assuming the H.P. to be transparent.)
4. An orthographic projection of point C is obtained by turning H.P. in the clockwise direction at 90°.
5. To construct an orthographic projection of point C
   (i) Draw the XY line.
   (ii) Draw the projector perpendicular to the XY line.
   (iii) Locate F.V. c' on the projector 10 mm below the XY line.
   (iv) Locate T.V. c on the same projector 20 mm above the XY line.

Scanned by CamScanner

7.6 Position of Point in Fourth Quadrant

Problem 4

Draw the projection of a point D which is 10 mm below the H.P. and 20 mm in front of the V.P.

Solution

Refer figure 7.4.

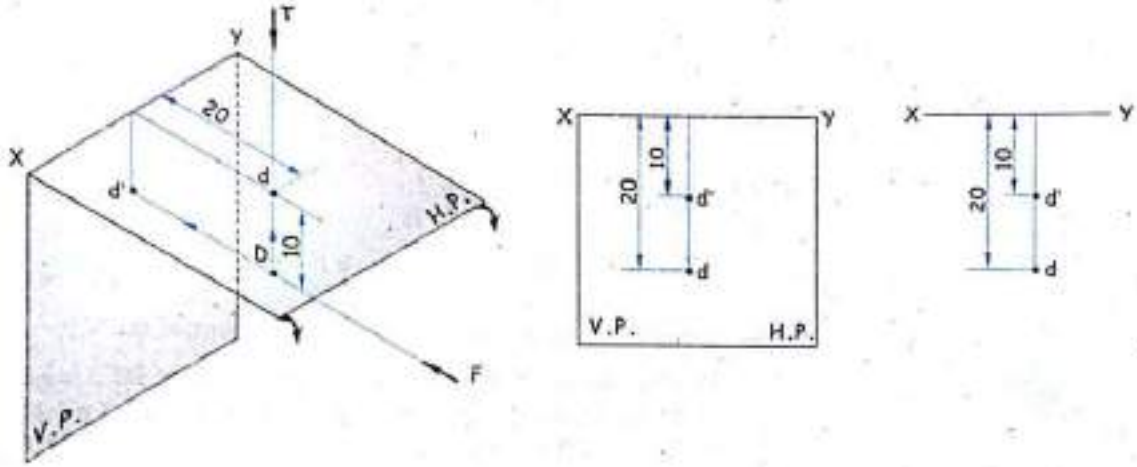

FIG 7.4

1. Point D is situated in the fourth quadrant 10 mm below the H.P. and 20 mm in front of the V.P.
2. F.V. of point D is obtained by viewing in the direction of F till the projector touches the V.P. at d'.
3. T.V. of point D is obtained by viewing in the direction of T till the projector touches the H.P. at d. (Point D is projected on the H.P. assuming the H.P. to be transparent.)
4. An orthographic projection of point D is obtained by turning H.P. in the clockwise direction at 90°.
5. To construct an orthographic projection of point D
   (i) Draw the XY line.
   (ii) Draw the projector perpendicular to the XY line.
   (iii) Locate F.V. d' on the projector 10 mm below the XY line.
   (iv) Locate T.V. d on the same projector 20 mm below the XY line.

Scanned by CamScanner

7.7 Position of Point on/in the H.P. and in Front of the V.P.

Problem 5

A point E is on the H.P. and 20 mm in front of the V.P. Draw its projection.

Solution

Refer figure 7.5.

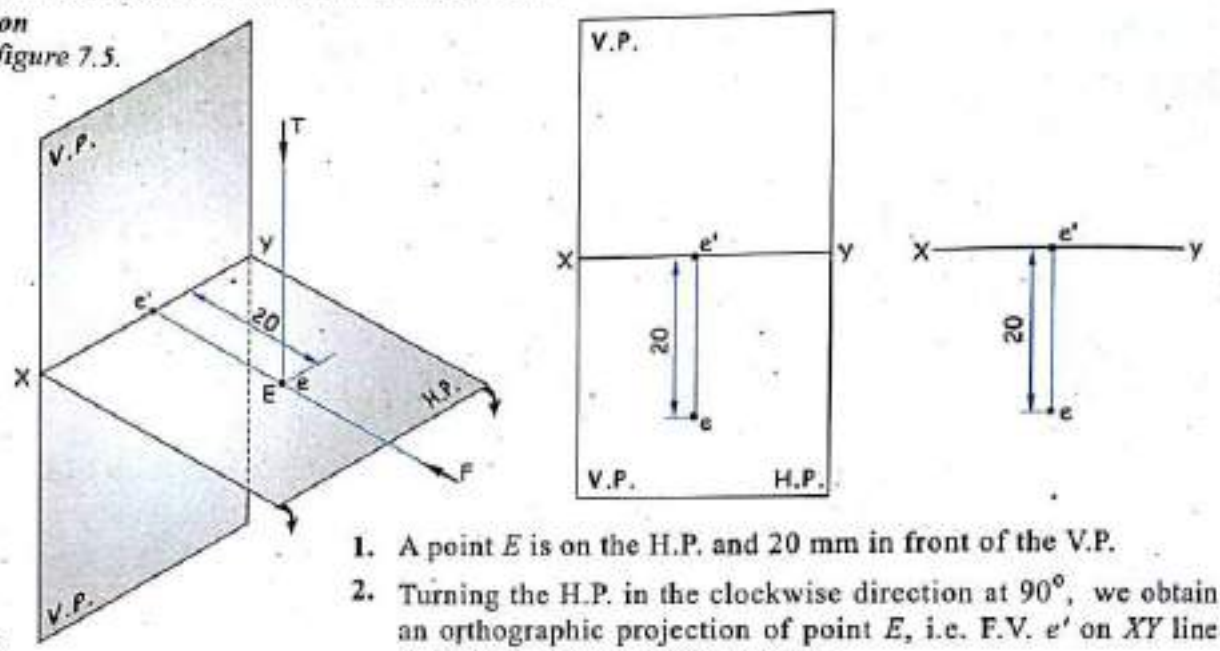

FIG. 7.5

1. A point E is on the H.P. and 20 mm in front of the V.P.
2. Turning the H.P. in the clockwise direction at 90°, we obtain an orthographic projection of point E, i.e. F.V. e' on XY line and T.V. e, 20 mm below XY line.

7.8 Position of Point on/in the H.P. and Behind the V.P.

Problem 6

Draw the projection of a point F if it is in the H.P. and 20 mm behind the V.P.

Solution

Refer figure 7.6.

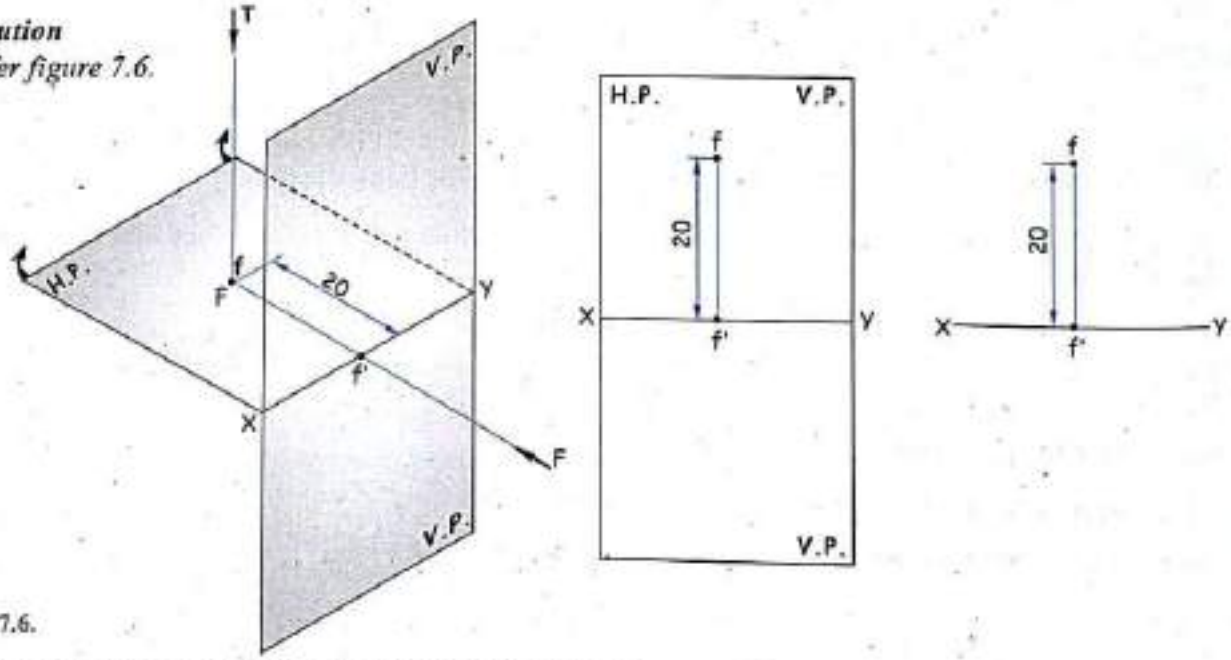

FIG. 7.6.

1. A point F is in the H.P. and 20 mm behind the V.P.
2. Turning the H.P. in the clockwise direction at 90°, we obtain an orthographic projection of point F, i.e. F.V. f' on XY line and T.V. f, 20 mm above XY line.

Scanned by CamScanner

7.9 Position of Point on/in the V.P. and Above the H.P.

Problem 7

A point G is in the V.P. and 10 mm above the H.P. Draw its projection.

Solution

Refer figure 7.7.

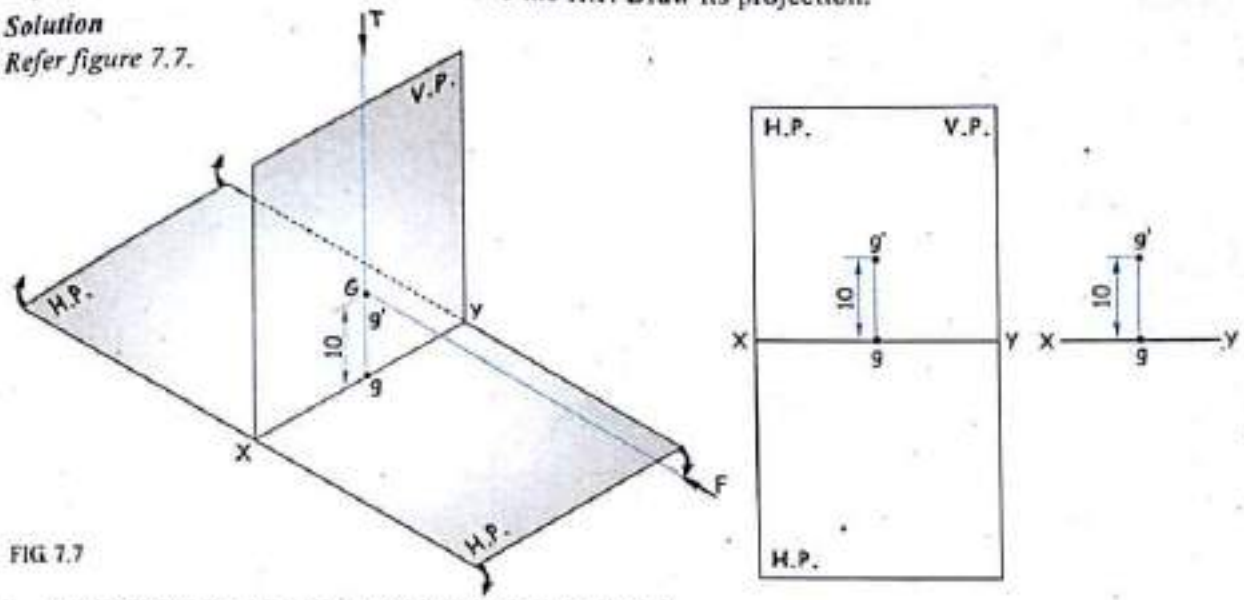

FIG 7.7

1. A point G is in the V.P. and 10 mm above the H.P.
2. F.V. g' is 10 mm above the XY line and T.V. g is on the XY line.

7.10 Position of Point on/in the V.P. and Below the H.P.

Problem 8

Draw the projection of a point H, which is in the V.P. and 10 mm below the H.P.

Solution

Refer figure 7.8.

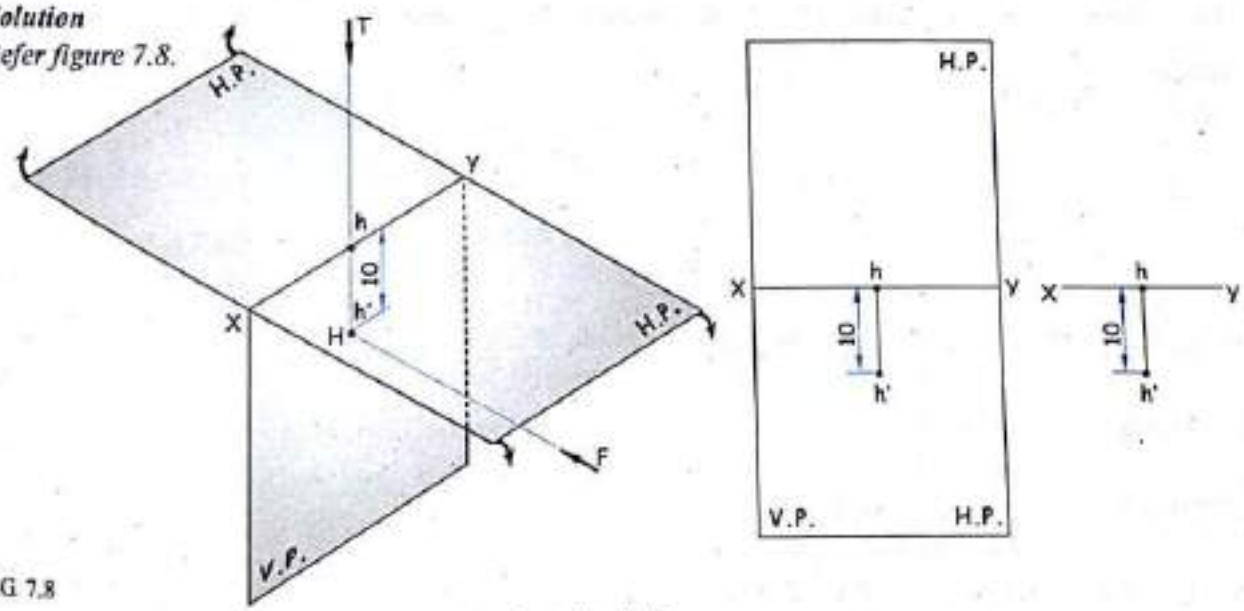

FIG 7.8

1. A point H is in the V.P. and 10 mm below the H.P.
2. F.V. h' is 10 mm below the XY line and T.V. h is on the XY line.

Scanned by CamScanner

7.11 Position of Point on the H.P. and the V.P.

Problem 9

Draw the projection of a point N lying on both the V.P. and the H.P.

Solution

Refer figure 7.9.

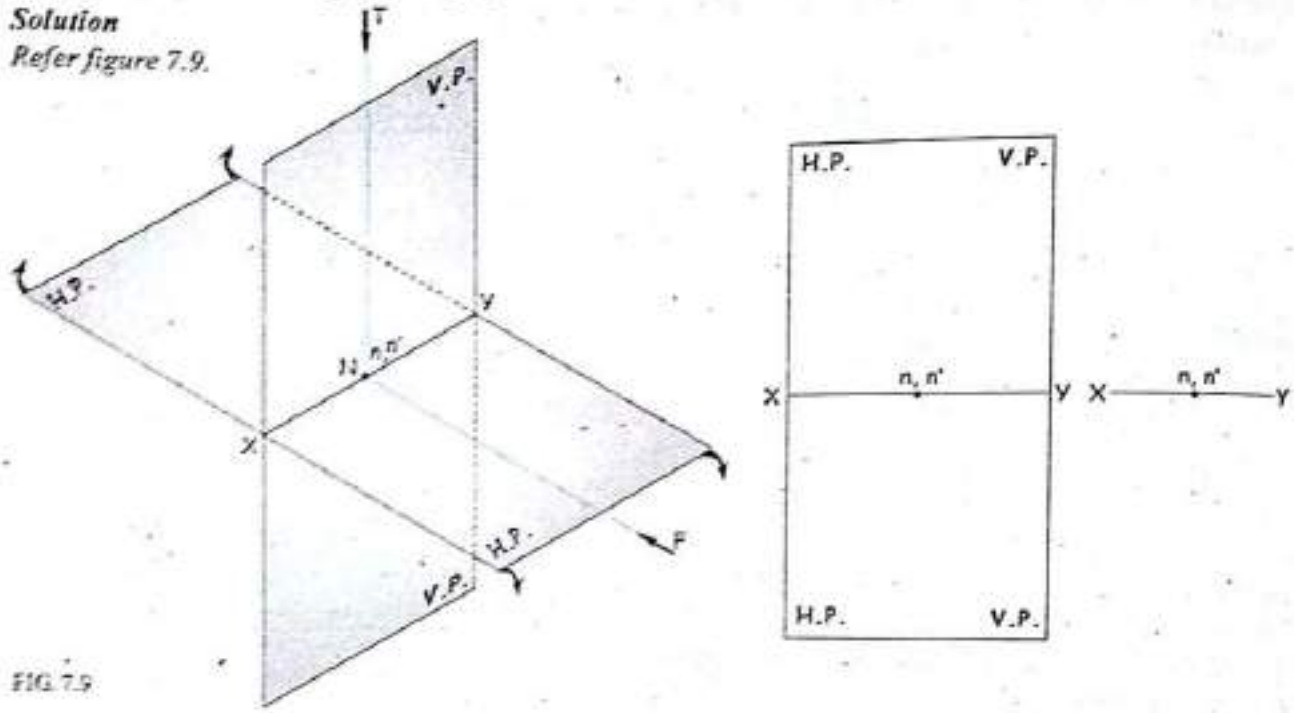

FIG. 7.9

F.V. n' and T.V. n are the common points lying on the XY line.

7.12 Position of Point in Four Quadrants

Problem 10

How a point situated in space in any of the four quadrant is stated ?

Solution

Refer figure 7.10.

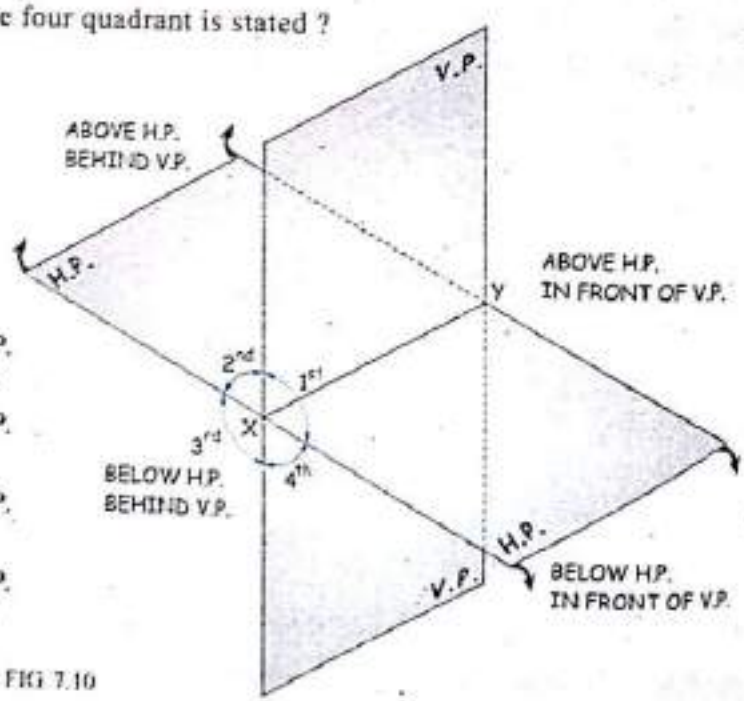

I^{st} Quadrant ⇒ A point is ABOVE H.P. and INFRONT OF V.P.

IInd Quadrant ⇒ A point is ABOVE H.P. and BEHIND V.P.

IIIrd Quadrant ⇒ A point is BELOW H.P. and BEHIND V.P.

IVth Quadrant ⇒ A point is BELOW H.P. and INFRONT OF V.P.

FIG. 7.10

Scanned by CamScanner

7.13 Orthographic Projection of a Point on Three Principal Planes

Problem 11

Draw the projection of a point *A* situated in the first quadrant such that point *A* is 10 mm above the H.P., 20 mm in front of the V.P. and 15 mm away from the profile plane (P.P.).

Solution

Refer figure 7.11.

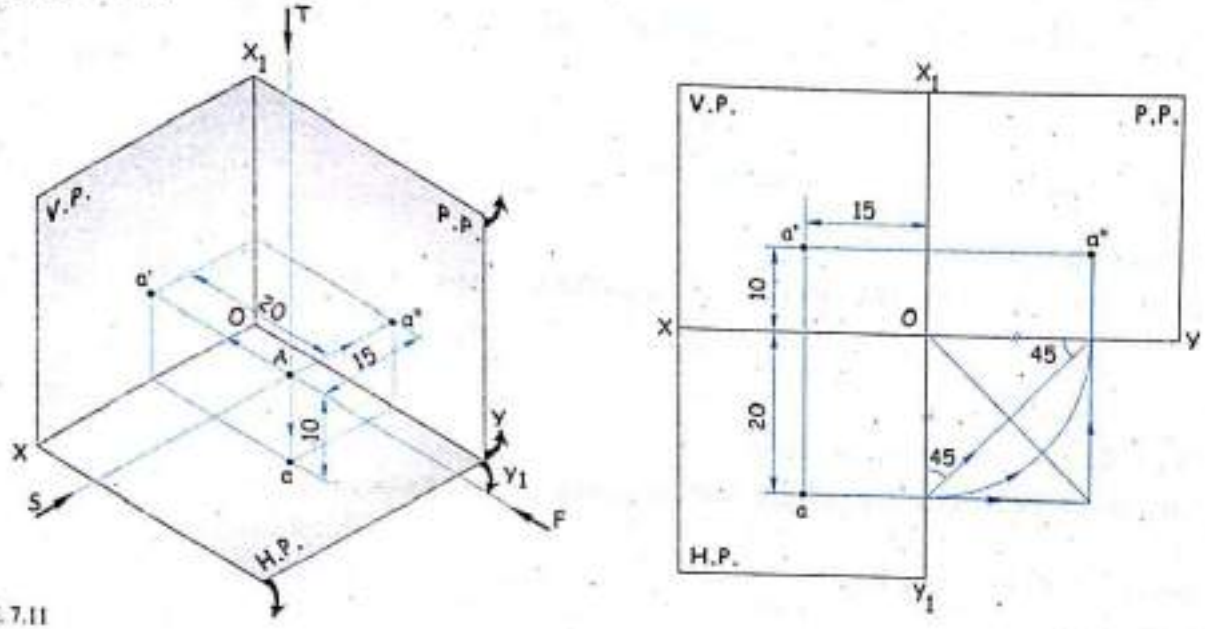

FIG. 7.11

The third principal plane, which is the profile plane (P.P.) is considered perpendicular to both the H.P. and the V.P. Viewing from the direction *S*, side view of point *A* (i.e. *a"*) is obtained on the P.P. To draw an orthographic projection of a point *A*, the H.P. is turned in the clockwise direction at 90° and the P.P. is turned as indicated by an arrow at 90°, so the three principal planes become coplanar.

7.14 Methodical Approach

I. Position of a Point Above/ Below the H.P.

1. Position of a point with respect to the H.P. is given by either of these words, above the H.P. or below the H.P. These two positions (i.e. above and below the H.P) cannot exist for a single point together at the same instance.
2. The projection of a point obtained above or below the H.P. is the F.V. of the point.
3. We get the position of a point with respect to the *XY* line as shown in *figure 7.12*.

FIG. 7.12

Scanned by CamScanner

II. Position of a Point In Front of / Behind the V.P.

1. Position of a point with respect to the V.P. is given by either of these words, in front of the V.P. or behind the V.P. These two positions cannot exist for a single point together at the same instance.
2. The projection of a point obtained in front of the V.P. or behind the V.P. is the T.V. of the point.
3. We get the position of a point with respect to the *XY* line as shown in *figure 7.13*.

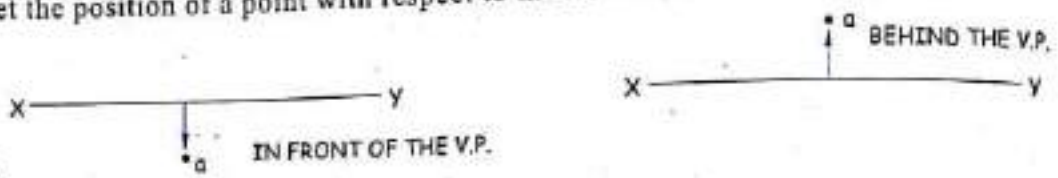

FIG. 7.13

III. Position of a Point on/ in the H.P.

If a point is on/ in the H.P.; its F.V. will lie on the *XY* line as shown in *figure 7.14*.

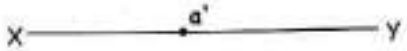

FIG. 7.14

IV. Position of a Point on/ in the V.P.

If a point is on/ in the V.P.; its T.V. will lie on the *XY* line as shown in *figure 7.15*.

FIG. 7.15

Conclusion

1. When the point is above the H.P.; its F.V. is above the *XY* line.
2. When the point is below the H.P.; its F.V. is below the *XY* line.
3. When the point is on the H.P.; its F.V. is on the *XY* line.
4. When the point is in front of the V.P.; its T.V. is below the *XY* line.
5. When the point is behind the V.P.; its T.V. is above the *XY* line.
6. When the point is on the V.P.; its T.V. is on the *XY* line.

7.15 Exercise

1. Draw the projection of the following points :
   (i) *A* is 20 mm above the H.P. and 10 mm in front of the V.P.
   (ii) *B* is 10 mm above the H.P. and 15 mm behind the V.P.
   (iii) *C* is 15 mm below the H.P. and 20 mm behind the V.P.
   (iv) *D* is 10 mm below the H.P. and 25 mm in front of the V.P.
   (v) *E* is 15 mm in front of the V.P. and on the H.P.
   (vi) *F* is 30 mm behind the V.P. and on the H.P.
   (vii) *G* is 25 mm above the H.P. and in the V.P.
   (viii) *H* is 20 mm below the H.P. and in the V.P.
   (ix) *M* is in both the H.P. and the V.P.

Scanned by CamScanner

2. The *figure 7.16* shows the projection of points. State the position of each with respect to the H.P. and the V.P.

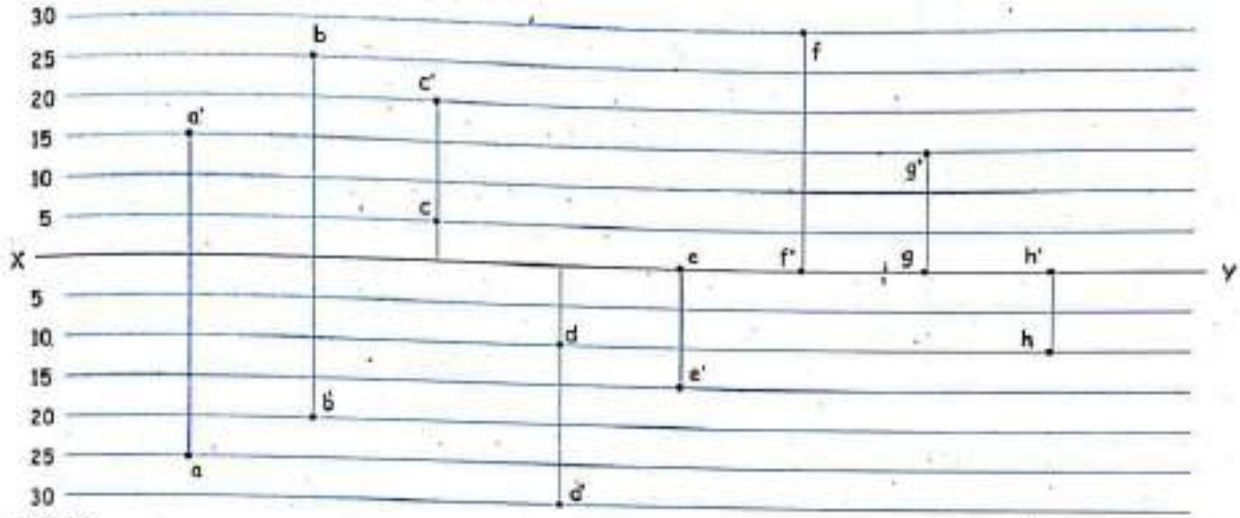

FIG. 7.16

3. Fill in the blanks :

(i) If the point P is 25 mm below the H.P. and 30 mm behind the V.P., then point P is situated in the _____ quadrant.

(ii) If T.V. of a point Q is on the XY line and F.V. is above the XY line, then point Q is lying on _____ plane.

(iii) If F.V. and T.V. of a point is common point shown above the XY line, then the point is lying in the _____ quadrant.

(iv) If F.V. and T.V. of point is below the XY line, then the point is lying in the _____ quadrant.

(v) If F.V. of point lies on the XY line, then the point lies on the _____ plane.

(vi) If the point is lying in the V.P., then its _____ view lies on the XY line.

(vii) A point situated in the IVth quadrant is said to be _____ the H.P and _____ the V.P. (above / below / in front / behind)

(viii) If a point is in front of the V.P., its T.V. is _____ XY line (above/ below).

(ix) The F.V. and T.V. of a point lies on a line which is perpendicular to the XY line, this perpendicular line is called _____ (projection/ projector).

4. Solve the following :

(i) T.V. of a point is 40 mm below the XY line and F.V. of a point is 10 mm below the XY line. Find the distance between the F.V. and T.V.

(ii) T.V. of a point is 40 mm above the XY line and F.V. of a point is 10 mm below the XY line. Find the distance between the F.V. and the T.V. of the point.

(iii) A point P is 10 mm behind the H.P. and 20 mm below the V.P. Do the correction in sentence by replacing proper words. (behind, below)

(iv) The F.V. and the T.V. of a point lying on the XY line is a point lying in the H.P. and the V.P. (True / False).

Note : *Refer Appendix A for solutions.*

Scanned by CamScanner

8 PROJECTIONS OF STRAIGHT LINES

8.1 Introduction

A straight line is a set of collinear points having some definite length. A line with definite length is given by the end points. The shortest distance between the two end points is a straight line. Refer figure 8.1.

FIG. 8.1

Position of Line with Respect to Principal Planes

8.2 Line Parallel to Two Principal Planes and Perpendicular to the Third

8.2.1 Line Parallel to the H.P. and V.P. and Perpendicular to the Profile Plane

Problem 1

A line *AB* having length 40 mm is parallel to the H.P. and V.P. and perpendicular to the Profile Plane. A line is 10 mm above the H.P., 20 mm in front of the V.P. Draw the projections of line *AB*.

Solution

Refer figure 8.2 (a), (b) and (c).

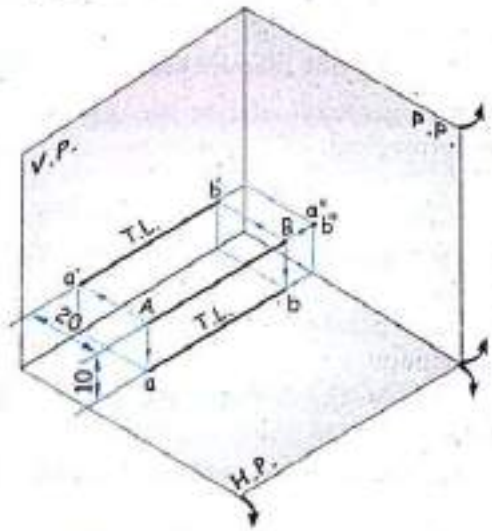

FIG. 8.2 (a)

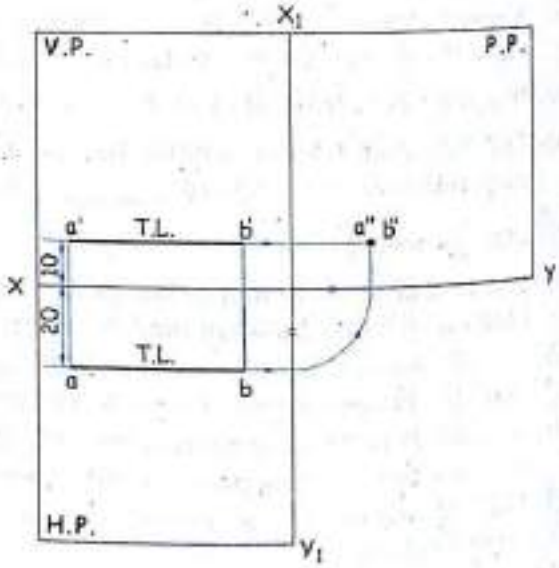

FIG. 8.2 (b)

Scanned by CamScanner

1. The end points A and B of line AB are projected on the V.P., the H.P. and the P.P. It gives the projections F.V. ($a'b'$), T.V. (ab) and S.V. ($a''b''$) as shown in *figure 8.2 (a)*.
2. Unfolding the principal planes we, get the projections of lines as shown in *figure 8.2 (b)*.
3. To draw the projections of line, *refer figure 8.2 (c)*.
   (i) As the line is parallel to the H.P. and V.P. its F.V. ($a'b'$) and T.V. (ab) are parallel to the XY line and each represent the true length of line AB.
   (ii) Draw the XY line.
   (iii) Draw F.V. ($a'b'$) 10 mm above the XY line.
   (iv) Draw T.V. (ab) 20 mm below the XY line (a' and a ; b' and b lie on the same projector)

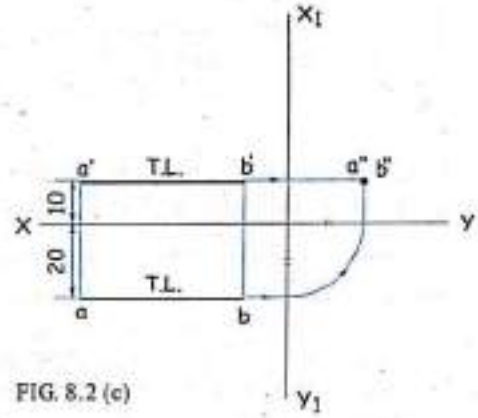

FIG. 8.2 (c)

To Project the S.V.

(i) Draw X_1Y_1 line as a reference line perpendicular to the XY line.
(ii) Through F.V. ($a'b'$), draw a horizontal line parallel to the XY line.
(iii) Through T.V. (ab), draw a line parallel to XY to meet the X_1Y_1 line.
(iv) Taking intersection of XY and X_1Y_1 as a centre, draw an arc with a radius 20 mm to meet XY and draw a vertical projector to intersect the horizontal line drawn through $a'b'$ to obtain S.V. $a''b''$.

Note : *When the line is parallel to the two Principal Plane, it is perpendicular to the third Principal Plane and projection of line on that Principal Plane is a point, viz. In the above example, point $a''b''$ is side view of line AB in Profile Plane.(P.P.)*

8.2.2 Line Parallel to the V.P. and P.P. and Perpendicular to the H.P.

Problem 2

A line AB having length 40 mm is parallel to the V.P. and P.P. and perpendicular to the H.P. A line is 20 mm in front of the V.P. and a point B is 10 mm above the H.P. Draw its projections.

Solution

Refer figure 8.3 (a), (b) and (c).

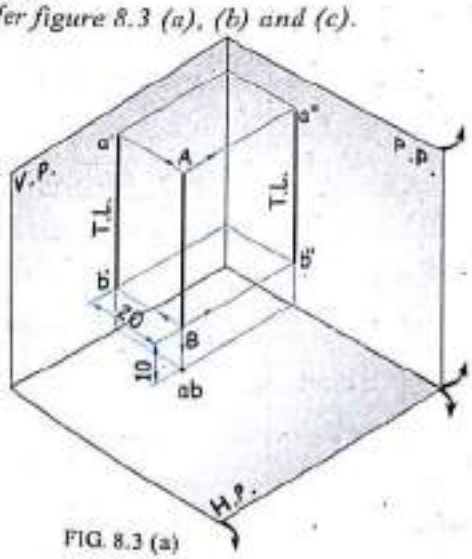

FIG. 8.3 (a)

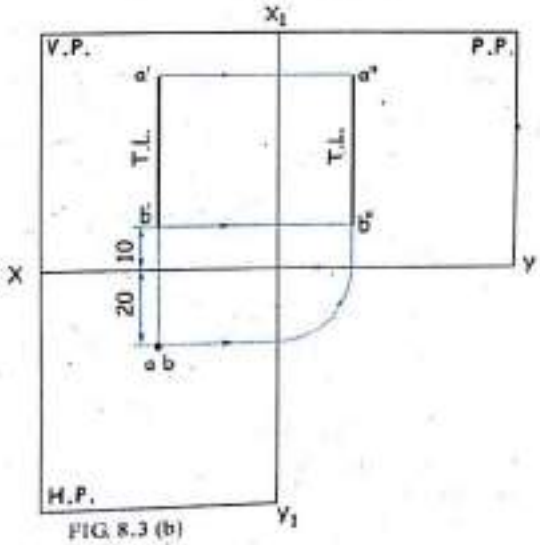

FIG. 8.3 (b)

Scanned by CamScanner

1. The end points A and B of line AB are projected on the V.P., the H.P. and the P.P. giving the projections F.V. ($a'b'$), T.V. (ab) and S.V. ($a''b''$) as shown in *figure 8.3 (a)*.
2. Unfolding the principal planes, we get the projections of lines as shown in *figure 8.3 (b)*.
3. To draw the projections of lines, *refer figure 8.3 (c)*.
   (i) As the line is perpendicular to the H.P., T.V. is shown by a point. As the line is parallel to the V.P. and P.P., its F.V. ($a'b'$) and S.V. ($a''b''$) are parallel to the X_1Y_1 line and each represents the true length of line AB.

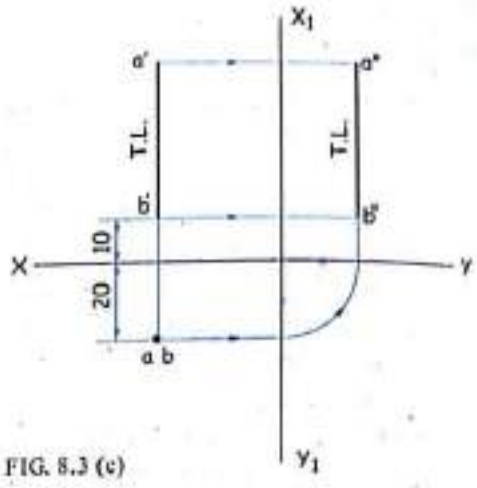

FIG. 8.3 (c)

   (ii) Draw the XY line.
   (iii) Locate the T.V. as a point ab, 20 mm below the XY line.
   (iv) Draw the projector through T.V. (ab) vertically up and perpendicular to the XY line.
   (v) On the projector, locate b' 10 mm above the XY line and locate a', 50 mm above the XY line (i.e. $a'b' = 40$ mm). Draw the F.V. ($a'b'$) having true length 40 mm.
   (vi) To construct the S.V., draw the X_1Y_1 line perpendicular to the XY line. Through F.V. ($a'b'$), and T.V. (ab), draw the S.V. ($a''b''$) by usual method as shown.

8.2.3 Line Parallel to the H.P. and P.P. and Perpendicular to the V.P.

Problem 3

A line AB having length 40 mm is parallel to the H.P. and P.P. and perpendicular to the V.P. A line is 10 mm above the H.P. and point B is 20 mm in front of the V.P. Draw its projections.

Solution

Refer figure 8.4 (a), (b) and (c).

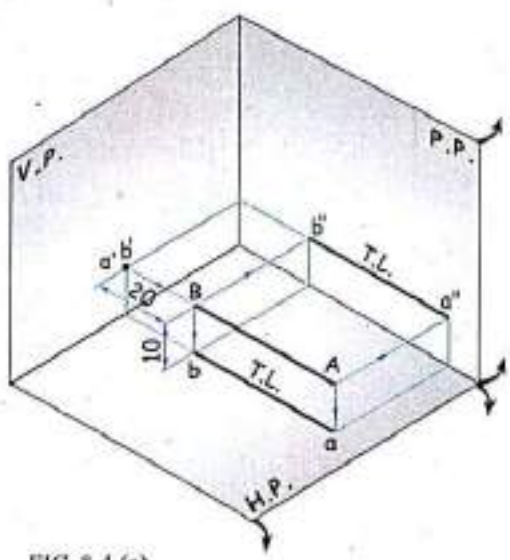

FIG. 8.4 (a)

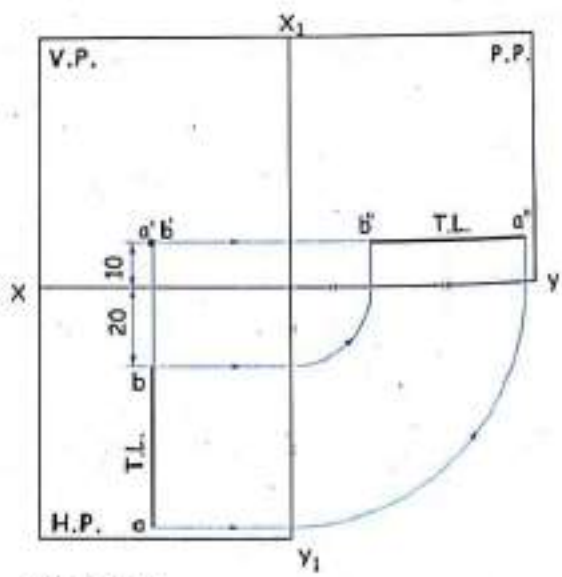

FIG. 8.4 (b)

Scanned by CamScanner

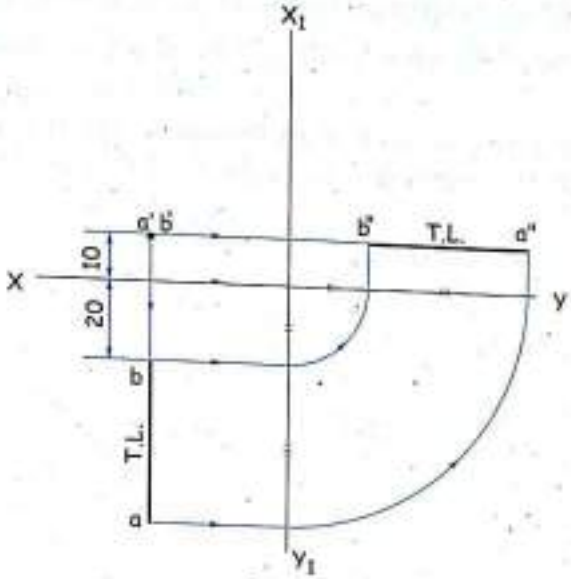

FIG. 8.4 (c)

1. The end points A and B of line AB are projected on the V.P., the H.P. and the P.P. giving the projections F.V. ($a'b'$), T.V. (ab) and S.V. ($a''b''$) as shown in *figure 8.4 (a)*.
2. Unfolding the principal planes, we get the projections of lines as shown in *figure 8.4 (b)*.
3. To draw the projections of lines, *refer figure 8.4 (c)*.
   (i) As the line is perpendicular to the V.P., F.V. ($a'b'$) is shown by a point. As the line is parallel to the H.P. and P.P., its T.V. is parallel to the X_1Y_1 and the S.V. is parallel to the XY line and each represents the true length of line AB.
   (ii) Draw the XY line.
   (iii) Locate F.V. as a point $a'b'$ 10 mm above the XY line.
   (iv) Draw the projector through F.V. ($a'b'$) vertically down perpendicular to the XY line.
   (v) On the projector, locate b 20 mm below the XY line and locate a 40 mm from b and draw the T.V. (ab) of true length 40 mm.
   (vi) To construct the S.V., draw the X_1Y_1 line perpendicular to the XY line. Projecting F.V. ($a'b'$), and T.V. (ab), draw the S.V. ($a''b''$) by usual method as shown in *figure 8.4(c)*.

Conclusion

1. When the line is parallel to the V.P., its F.V. shows the true length.
2. When the line is parallel to the H.P., its T.V. shows the true length.
3. When the line is parallel to the P.P., its S.V. shows the true length.
4. When the line is perpendicular to the V.P., its F.V. is a point.
5. When the line is perpendicular to the H.P., its T.V. is a point.
6. When the line is perpendicular to the P.P., its S.V. is a point.

Scanned by CamScanner

8.3 Line Parallel to One Principal Plane and Inclined to the Other

8.3.1 Line Parallel to the V.P. and Inclined to the H.P. and P.P.

Problem 4

A line *AB* having length 50 mm has its point *A* 10 mm above the H.P. and 20 mm in front of the V.P. The line is parallel to V.P. and inclined at an angle θ = 45° to the H.P. Draw the projections of a line.

Solution : *Refer figure 8.5 (a), (b) and (c).*

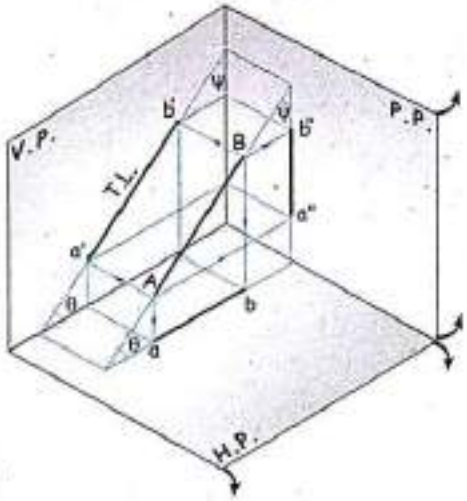

FIG. 8.5 (a)

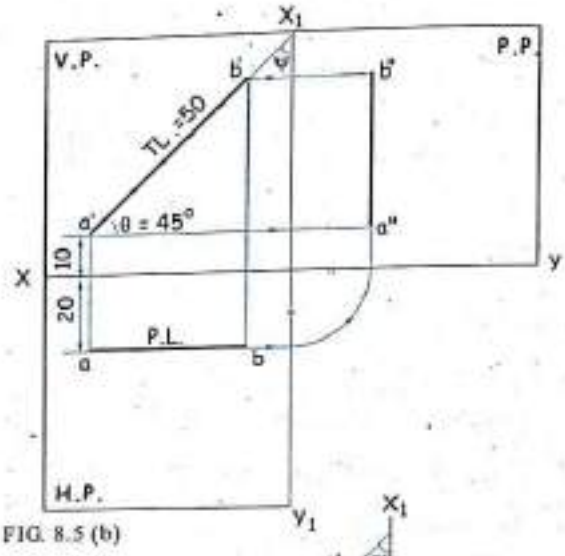

FIG. 8.5 (b)

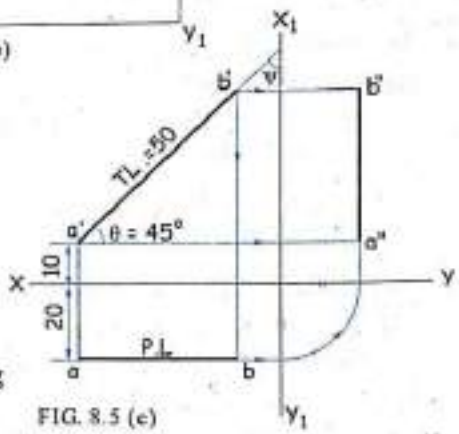

FIG. 8.5 (c)

1. The required position of line *AB* is shown in *figure 8.5 (a)*, with its projections, i.e. F.V. (*a'b'*) and T.V. (*ab*).
2. Unfolding the principal plane, we get the projection of line as shown in *figure 8.5 (b)*.
3. To draw the projections of line, *refer figure 8.5 (c)*.
   (i) Locate *a'* 10 mm above *XY* line and *a* 20 mm below *XY* line on the same projector.
   (ii) Draw F.V. (*a'b'*) at an angle θ = 45° with *XY* line having T.L. of line *AB* = 50 mm as it is parallel to the V.P.
   (iii) From *a* construct thin line parallel to *XY* and through *b'* construct a projector vertically downwards to locate *b*. The point *b* is a point of intersection of a horizontal line drawn from *a* and projector drawn through *b'*. Draw the T.V. (*ab*). The T.V. (*ab*) represents the plan length (P.L.).
   (iv) From T.V. (*ab*) and F.V. (*a'b'*), we can construct the S.V. (*a''b''*) as shown in *figure 8.5 (c)*.

Conclusion

When the line is parallel to the V.P. and inclined to the H.P. and the P.P at an angle θ and ψ respectively, then

1. Its F.V. shows the true length.
2. Its F.V. shows an inclination with the corresponding reference line.
3. $\theta + \psi = 90°$.
4. Its T.V. and S.V. are parallel to the corresponding reference line.
5. Its T.V. and S.V. shows the apparent length.

Scanned by CamScanner

8.3.2 Line Parallel to the H.P. and Inclined to the V.P. and P.P.

Problem 5

A line AB having length 50 mm has its end point A 10 mm above the H.P. and 20 mm in front of the V.P. The line is parallel to the H.P. and inclined at an angle $\phi = 45^\circ$ to the V.P. Draw the projections of line.

Solution

Refer figure 8.6 (a), (b) and (c).

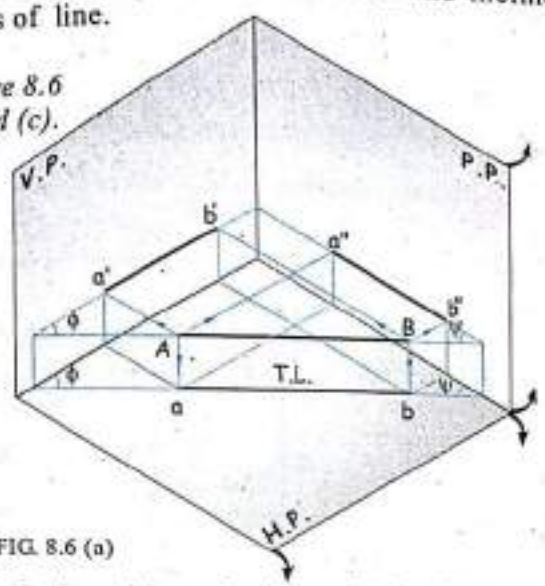

FIG. 8.6 (a)

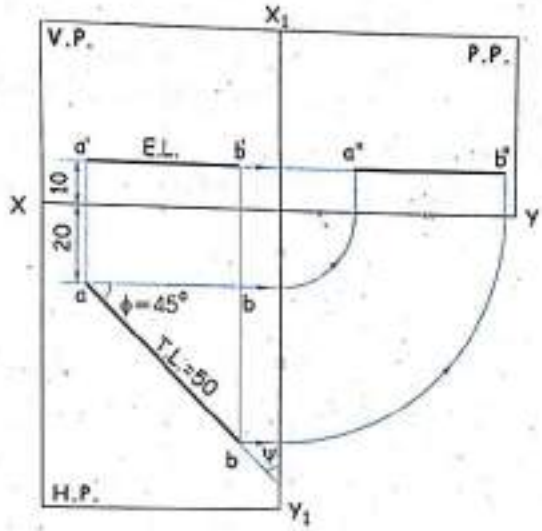

FIG. 8.6 (b)

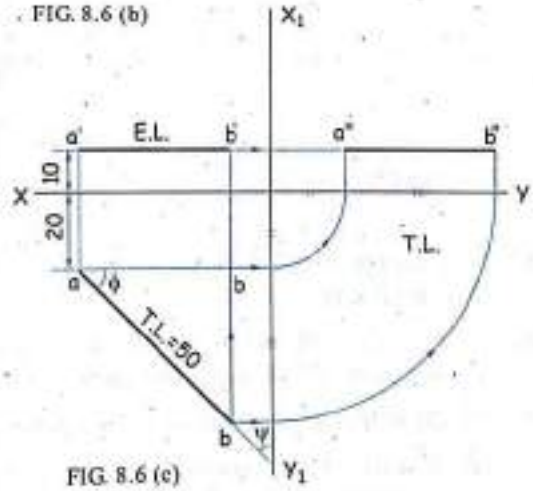

FIG. 8.6 (c)

1. The required position of a line AB is shown in *figure 8.6 (a)*, with its projections, i.e. F.V. ($a'b'$) and T.V. (ab).
2. Unfolding the principal plane, we get the projections of a line as shown in *figure 8.6 (b)*.
3. To draw the projections of a line, *refer figure 8.6 (c)*.
   (i) Locate a' 10 mm above the XY line and a 20 mm below the XY line on the same projector.
   (ii) Draw T.V. (ab) at an angle $\phi = 45^\circ$ with the XY line having the T.L. of a line $AB = 50$ mm as it is parallel to the H.P.
   (iii) From a', construct a thin line parallel to the XY line and through b, construct the projector vertically up to locate b'. The point b' is a point of intersection of a horizontal line drawn from a' and projector drawn through b. Draw F.V. ($a'b'$). The F.V. ($a'b'$) represents the elevation length (E.L.).
   (iv) From F.V. ($a'b'$) and T.V. (ab), we can construct the S.V. ($a''b''$) as shown in *figure 8.6 (c)*.

Conclusion

When the line is parallel to the H.P. and inclined to the V.P. and the P.P at an angle ϕ and ψ respectively, then

1. Its T.V. shows the true length.
2. Its T.V. shows an inclination with the corresponding reference line.
3. $\phi + \psi = 90^\circ$.
4. Its F.V. and S.V. are parallel to the corresponding reference line.
5. Its F.V. and S.V. shows the apparent length.

Scanned by CamScanner

8.3.3 Line Parallel to the P.P. and Inclined to the H.P. and V.P.

Problem 6

A line AB having length 50 mm has its end point A, 10 mm above the H.P. and 50 mm in front of the V.P. The line is parallel to the P.P. and inclined at an angle $\theta = 60^\circ$ to the H.P. and $\phi = 30^\circ$ to the V.P. Draw the projections of line.

Note : *When $\theta + \phi = 90^\circ$, the line is parallel to the P.P. The F.V. and T.V. will be collinear and perpendicular to the XY line, i.e. distance between the end projector is zero.*

Solution

Refer figure 8.7 (a), (b) and (c).

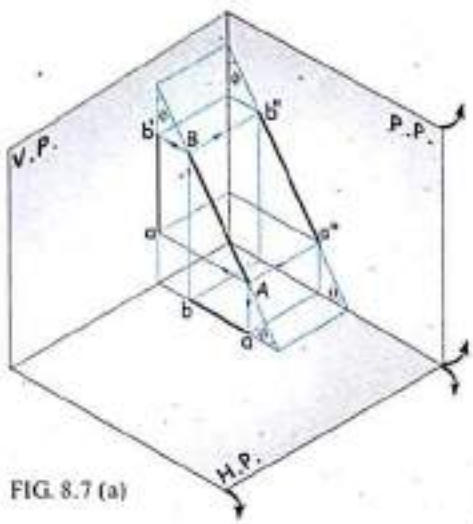

FIG. 8.7 (a)

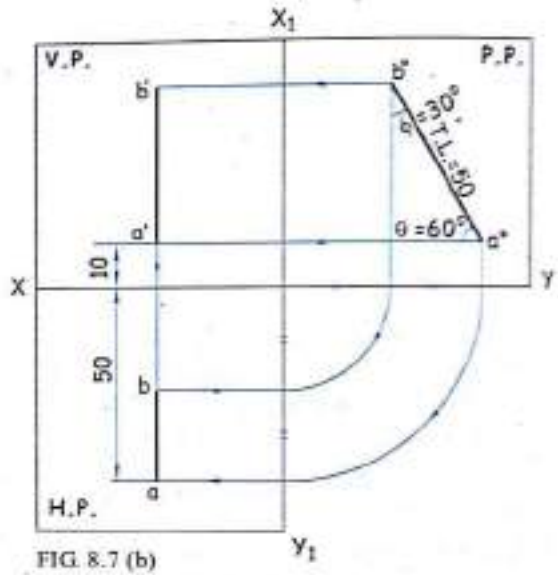

FIG. 8.7 (b)

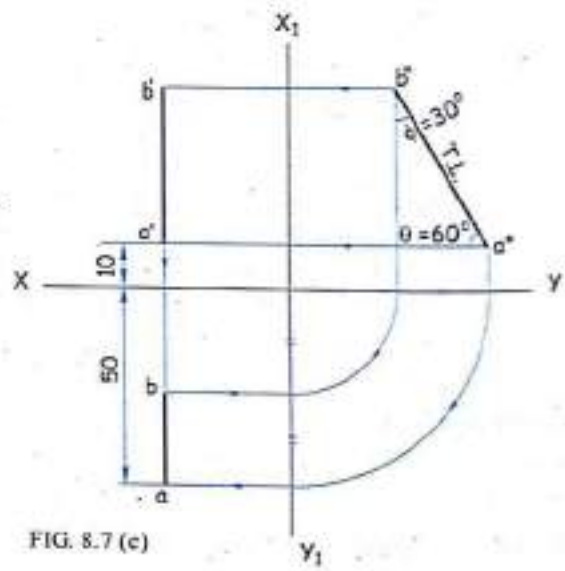

FIG. 8.7 (c)

1. The required position of a line AB is shown in *figure 8.7 (a)*.
2. Unfolding the principal plane, we get the projections of line as shown in *figure 8.7 (b)*.
3. To draw the projections of line, *refer figure 8.7 (c)*.
   (i) Construct the reference lines XY and $X'Y'$ mutually perpendicular to each other.
   (ii) Locate a'' 10 mm above the XY line and 50 mm to the right of $X'Y'$.
   (iii) Construct a thin line through a'' parallel to the XY and with this line at an angle $\theta = 60^\circ$, draw the S.V. ($a''b''$) having a true length of line AB = 50 mm, since the line is parallel to Profile Plane.(P.P.)
   (iv) Projecting the end points of the S.V. ($a''b''$) horizontally, we can construct the F.V. ($a'b'$) perpendicular to XY at some suitable distance from X_1Y_1.
   (v) From F.V. ($a'b'$) and S.V. ($a''b''$), we can construct the T.V. (ab) as shown in *figure 8.7 (c)*.

Scanned by CamScanner

Conclusion

When the line is parallel to the P.P. and inclined to the H.P. and the V.P at an angle θ and ϕ respectively, then

1. Its S.V. shows the true length.
2. Its S.V. shows an inclination with the corresponding reference line.
3. $\theta + \phi = 90^\circ$.
4. Its F.V. and T.V. are parallel to the corresponding reference line.
5. Its F.V. and T.V. shows the apparent length.

8.3.4 Line is in the V.P. and Inclined At an Angle θ to the H.P.

Problem 7

A line *AB*, 50 mm long is in the V.P. making an angle $\theta = 45^\circ$ with the H.P. If the end point *A* of a line is 10 mm above the H.P., draw the projections of line.

Solution

Refer figure 8.8 (a), (b) and (c).

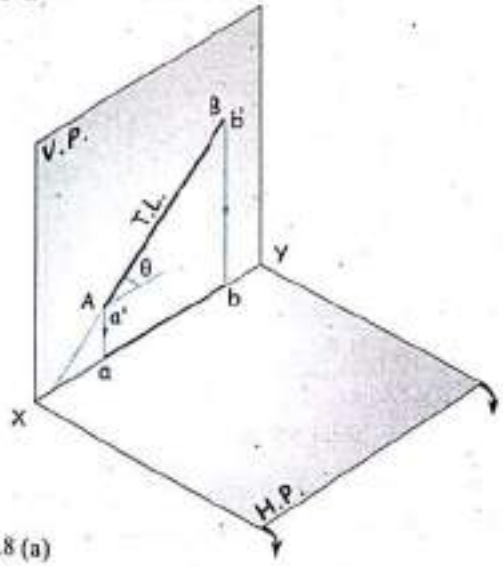

FIG. 8.8 (a)

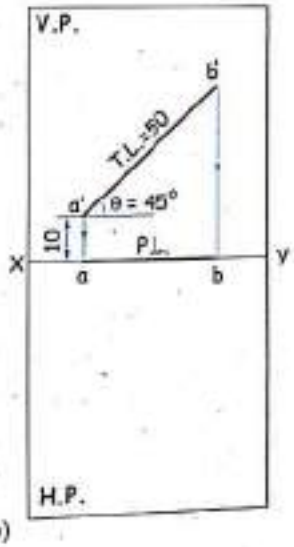

FIG. 8.8 (b)

As the line is in the V.P., distance from the V.P. is zero and is considered as parallel to the V.P. F.V. (*a'b'*) of line represents the true length (T.L), while the T.V. (*ab*) lying on the reference line *XY* represents the plan length (P.L.).

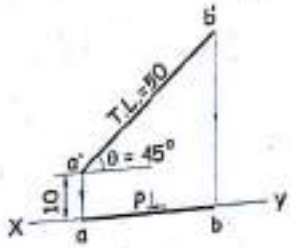

FIG. 8.8 (c)

Conclusion

When the line is in the V.P. and inclined to the H.P. at an angle θ, then

1. Its F.V. shows the true length.
2. Its F.V. shows an inclination with the *XY* line.
3. Its T.V. lies on the *XY* line.

Scanned by CamScanner

8.3.5 Line is in the H.P. and Inclined At an Angle ϕ to the V.P.

Problem 8

A line *AB*, 50 mm long is in the H.P. making an angle $\phi = 45^{\circ}$ with the V.P. such that the end point *A* is 20 mm in front of the V.P. Draw the projections.

Solution

Refer figure 8.9 (a), (b) and (c).

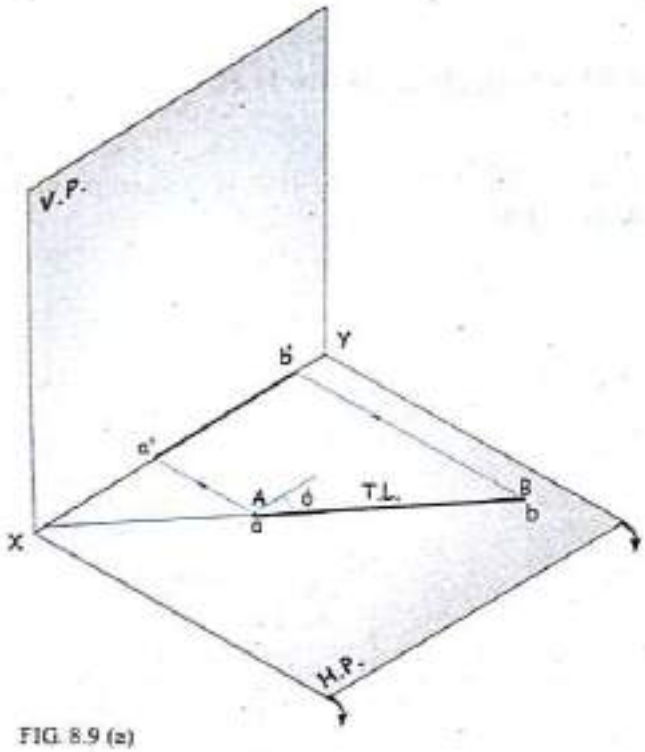

FIG. 8.9 (a)

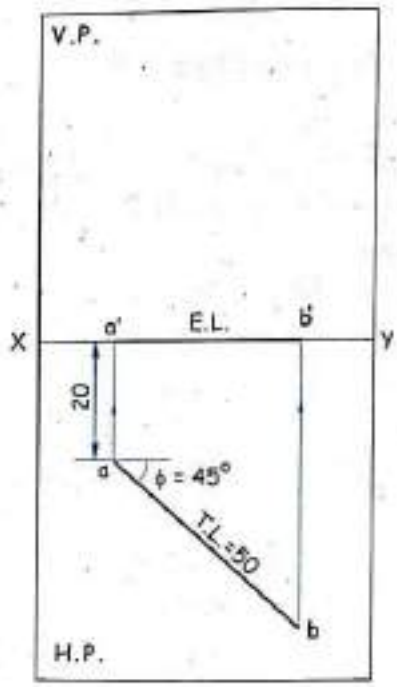

FIG. 8.9 (b)

As the line is in the H.P., its distance from the H.P. is zero and is considered as parallel to the H.P. T.V. (ab) of line represents the true length (T.L), while the F.V. (a'b') lying on the reference line XY represents the elevation length (E.L.).

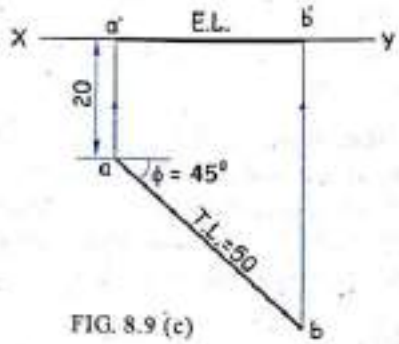

FIG. 8.9 (c)

Conclusion

When the line is in the H.P. and inclined to the V.P. at an angle ϕ, then

1. Its T.V. shows the true length.
2. Its T.V. shows an inclination with the *XY* line.
3. Its F.V. lies on the *XY* line.

Scanned by CamScanner

8.4 Oblique Line

Consider a line AB having true inclination θ with the H.P. and ϕ with the V.P. Draw the projections of a line AB if the location of one of the end points are given.

8.4.1 Notation Used

Description	Notation
Actual line	AB
F.V. of line	$a'b'$
T.V. of line	ab
S.V. of line	$a''b''$
Line assumed parallel to the V.P.	AB_1
Corresponding true length of assumed line AB_1	$a'b_1'$
Corresponding plan length of assumed line AB_1	ab_1
Line assumed parallel to the H.P.	AB_2
Corresponding true length of assumed line AB_2	ab_2
Corresponding elevation length of assumed line AB_2	$a'b_2'$
True Inclination of a line with the H.P.	θ
True Inclination of a line with the V.P.	ϕ
Apparent Inclination of F.V. of a line with the XY line	α
Apparent Inclination of T.V. of a line with the XY line	β

TABLE 8.1

Since, line AB is inclined to the H.P. and V.P., $a'b'$ and ab are not equal to the true length AB and also they are not inclined at θ and ϕ respectively. In order to obtain the orthographic projections, first the line is rotated about one of the end points keeping its inclination with the H.P. constant so as to make it parallel to the V.P., its projections in this position are obtained, and then the line is rotated about the same end point keeping its inclination with the V.P. constant, so as to make it parallel to the H.P., its projections in that position are obtained. The projection of line when it is inclined to both the H.P. and the V.P. are obtained by superimposing the projection obtained in these two cases.

8.4.2 Case (i) : Line Parallel to the V.P. and Inclined to the H.P. At an Angle θ

Let the line AB be rotated by fixing the point A and keeping the inclination θ of AB with the H.P. constant till it becomes parallel to the V.P. This rotation of the line gives the end B, a new position say B_1. So, AB_1 is a new position of the line AB such that the line is inclined at θ to the H.P. and parallel to the V.P. Projecting AB_1 on the V.P. and H.P. , we get $a'b_1'$ on the V.P. as a true length showing true inclination θ to the XY line (i.e. inclination with the H.P.) and ab_1 on the H.P. as plan length (P.L.), which is parallel to the XY line. *Refer figure 8.10.*

Scanned by CamScanner

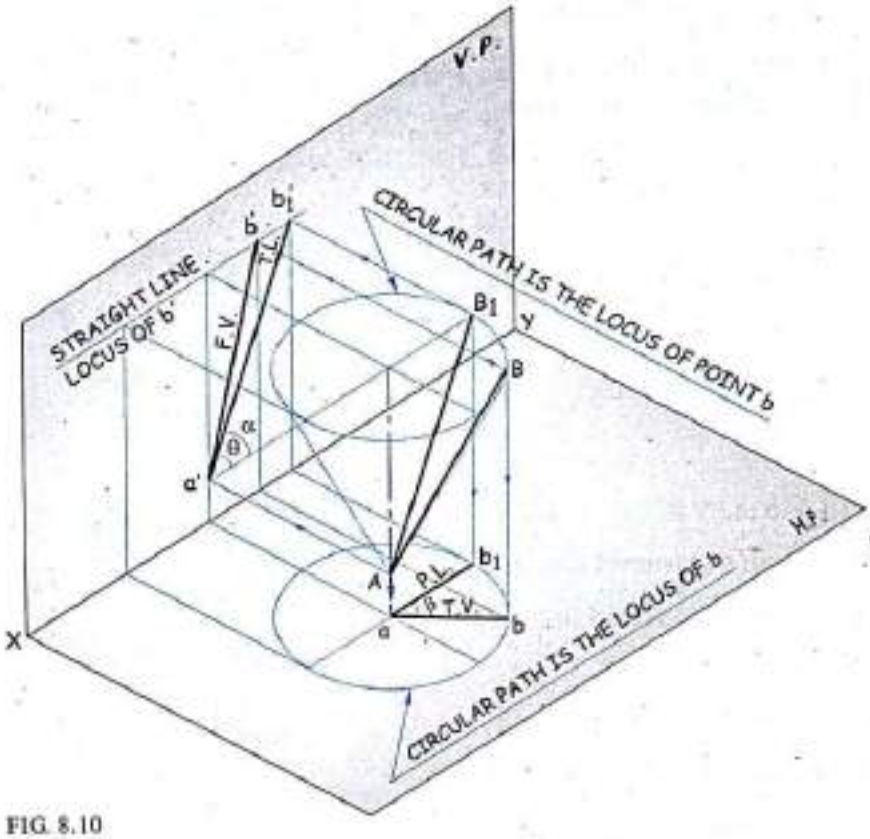

FIG. 8.10

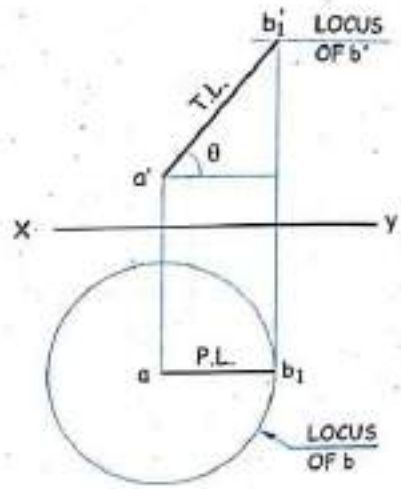

FIG. 8.11

The Locus of Point *B*

When the line AB is rotated by fixing a point A and keeping the inclination θ of AB with the H.P. constant for one complete rotation, a cone is formed.

Hence, we can conclude the following points :

1. The locus of point B is shown by a circle in the T.V. having centre a and radius equal to plan length (P.L).
2. The locus of point B is shown by a straight line parallel to the XY line in the F.V.
3. F.V. ($a'b_1'$) is of T.L. and shows inclination θ with the XY line.
4. T.V. (ab_1) is parallel to the XY line shows P.L. which is shorter than T.L.

To Construct an Orthographic Projection of Line AB_1. *Refer figure 8.11.*

(i) Draw the XY line.

(ii) Locate F.V. (a') and T.V.(a).

(iii) Draw the F.V. ($a'b_1'$) of given T.L. making an angle θ with the XY line.

(iv) Draw the T.V. (ab_1) parallel to the XY line as a plan length (P.L.).

(v) The locus of point B.

(a) Draw a straight line parallel to the XY line from b_1' as a locus of b'.

(b) Draw a circle with centre a and radius ab_1 as a locus of b.

Scanned by CamScanner

8.4.3 Case (ii) : Line Parallel to the H.P. and Inclined to the V.P. At an Angle ϕ

Let line AB be rotated by fixing a point A and keeping the inclination ϕ of AB with the V.P. constant till it becomes parallel to the H.P. This rotation of a line gives the end B, a new position say B_2. So, AB_2 is a new position of line AB such that the line is inclined at ϕ to the V.P. and parallel to the H.P. Projecting AB_2, on the H.P. and V.P., we get ab_2 on the H.P. as a true length showing true inclination ϕ to the XY line (i.e. inclination with the V.P.) and $a'b_2'$ as elevation length (E.L.), which is parallel to the XY line. *Refer figure 8.12.*

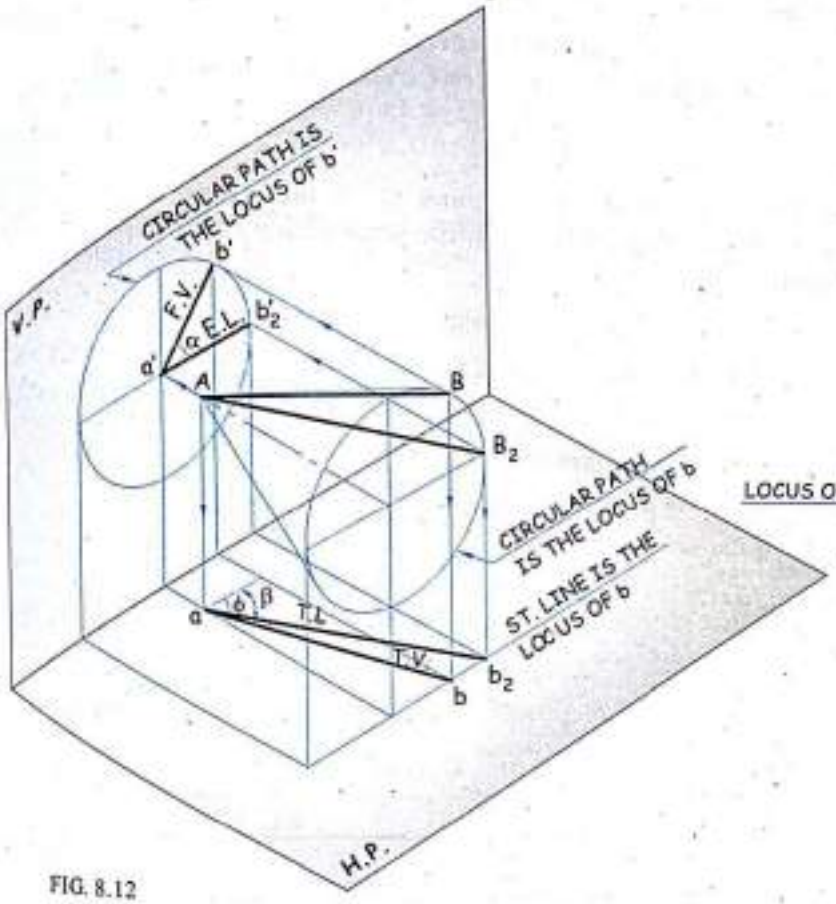

FIG. 8.12

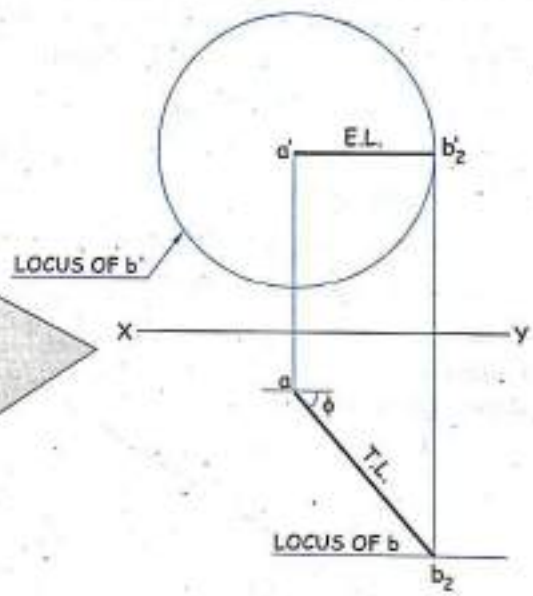

FIG. 8.13

The Locus of the Point B

When line AB is rotated by fixing a point A and keeping ϕ the inclination of AB with the V.P. constant for one complete rotation, a cone is formed.

Hence, we can conclude the following points :

1. The locus of point B is shown by a circle in the F.V. having centre a' and radius equal to elevation length (E.L).
2. The locus of point B is shown by a straight line parallel to the XY line in the T.V.
3. T.V. (ab_2) is of T.L. and shows inclination ϕ with the XY line.
4. F.V. ($a'b_2'$) is parallel to the XY line shows E.L. which is shorter than T.L.

Scanned by CamScanner

To Construct an Orthographic Projection of Line AB_2. *Refer figure 8.13.*

(i) Draw the XY line.

(ii) Locate F.V. (a') and T.V.(a).

(iii) Draw the T.V. (ab_2) of given T.L. making an angle ϕ with the XY line.

(iv) Draw the F.V. ($a'b_2'$) parallel to the XY line as a E.L.

(v) Locus of point B.

(a) Draw a straight line parallel to the XY line from b_2 as a locus of b.

(b) Draw a circle with centre a' and radius $a'b_1'$ as a locus of b'.

Combining the given two cases, oblique line problem can be solved.
Let us analyse the above discussion of oblique line by taking one example with suitable data.

Problem 9

A line AB, 70 mm long is inclined at an angle 30° to the H.P. and 45° to the V.P. Its end point A is 10 mm above the H.P. and 20 mm in front of the V.P. Draw the projections of line AB. Assume, complete line to be in the 1st quadrant.

Data : T.L. of AB = 70 mm $\Rightarrow$ $a'b_1' = ab_2 = 70$ mm.

$\theta = 30°$ $\Rightarrow$ $a'b_1'$ is at 30° to XY.

$\phi = 45°$ $\Rightarrow$ ab_2 is at 45° to XY.

A is 10 mm above the H.P. $\Rightarrow$ a' is 10 mm above XY.

A is 20 mm in front of the V.P. $\Rightarrow$ a is 20 mm below XY.

Solution

Case (i)
Refer figure 8.14.

Case (ii)
Refer figure 8.14.

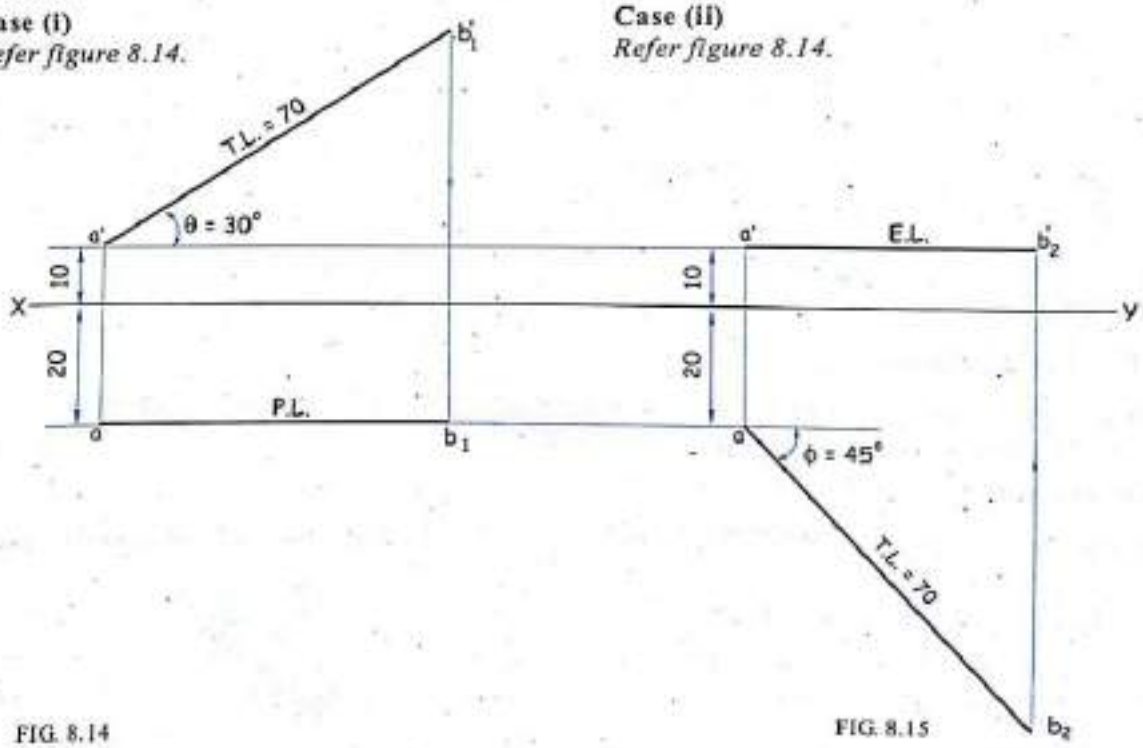

FIG. 8.14

FIG. 8.15

Scanned by CamScanner

Assumed line AB_1 is parallel to the V.P. and inclined to the H.P. at an angle θ.

Data

T.L. of AB = 70 mm ⇒ $a'b_1'$ = 70 mm.

θ = 30° ⇒ $a'b_1'$ is at 30° to XY.

A is 10 mm above the H.P. ⇒ a' is 10 mm above XY.

A is 20 mm in front of the V.P. ⇒ a is 20 mm below XY.

1. Locate a' and a.
2. Draw line $a'b_1'$, passing through a' at θ = 30° to the XY line and equal to the true length of AB = 70 mm.
3. Project $a'b_1'$ vertically down to get ab_1 as a plan length parallel to the XY line.

Assumed line AB_2 is parallel to the H.P. and inclined to the V.P. at an angle ϕ.

Data

T.L. of AB = 70 mm ⇒ ab_2 = 70 mm.

ϕ = 45° ⇒ ab_2 is at 45° to XY.

A is 10 mm above the H.P. ⇒ a' is 10 mm above XY.

A is 20 mm in front of the V.P. ⇒ a is 20 mm below XY.

1. Locate a' and a.
2. Draw line ab_2, passing through a at ϕ = 45° to the XY line and equal to the true length of AB = 70 mm.
3. Project ab_2 vertically up to get $a'b_2'$ as an elevation length (E.L.) parallel to the XY line.

Case (i) and (ii) Combined

Refer figure 8.16 and 8.17.

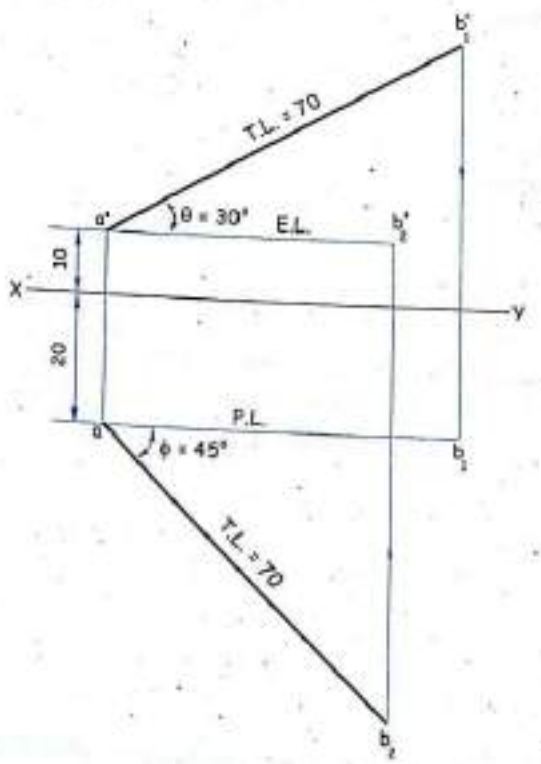

FIG. 8.16

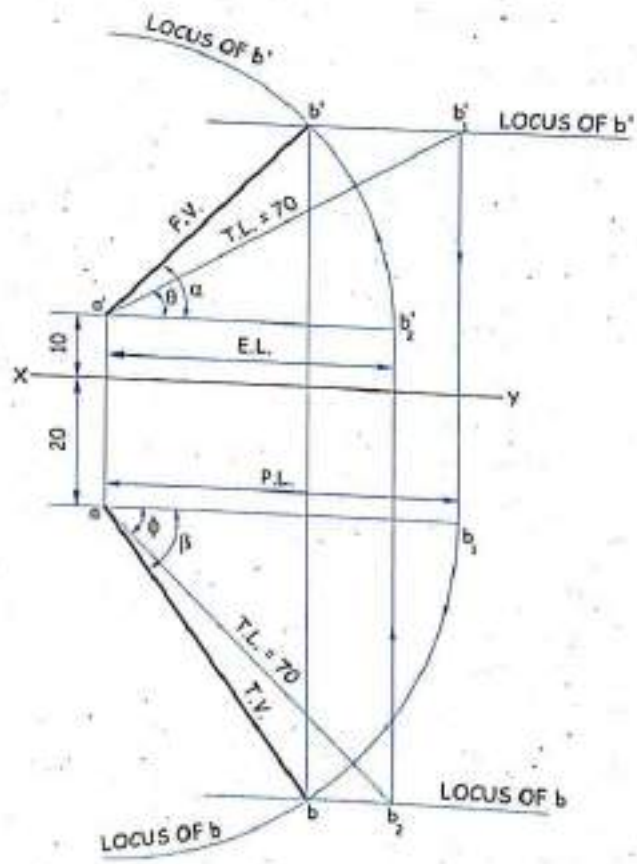

FIG. 8.17.

Scanned by CamScanner

How to locate b' and b. *Refer figure 8.17.*

To Locate b'.

1. Draw the locus line through b_1' as a straight line, parallel to the XY line.
2. Draw an arc of a circle with centre a' and radius $a'b_2'$.
3. Through the above construction, the point of intersection gives the required point b'.

To Locate b.

1. Draw the locus line through b_2 as a straight line, parallel to the XY line.
2. Draw an arc of a circle with centre a and radius ab_1.
3. Through the above construction, the point of intersection gives the required point b.

To Draw F.V. and T.V. of Line AB.

1. Join $a'b'$ which gives the F.V. of line AB.
2. Join ab which gives the T.V. of line AB.

Note : *a' and a ; b' and b lies on the same projector.*

Analysis of Problem 9

The given data for problem 9 were

Data : $AB = 70$ mm $\Rightarrow a'b_1' = ab_2 = 70$ mm.

$\theta = 30^\circ$ $\Rightarrow a'b_1'$ is at 30° to XY.

$\phi = 45^\circ$ $\Rightarrow ab_2$ is at 45° to XY.

A is 10 mm above the H.P. $\Rightarrow a'$ is 10 mm above XY.

A is 20 mm infront of the V.P. $\Rightarrow a$ is 20 mm below XY.

After solving the problem, we get the following data.

F.V. of line $\Rightarrow a'b'$

T.V. of line $\Rightarrow ab$

Corresponding plan length (P.L.) of the assumed line AB_1 $\Rightarrow a'b_1'$

Corresponding elevation length (E.L.) of the assumed line AB_2 $\Rightarrow a'b_2'$

Inclination of the F.V. of line with the XY line $\Rightarrow \alpha$

Inclination of the T.V. of line with the XY line $\Rightarrow \beta$

Note :

1. *Generally, among all the above stated data, minimum five data are required with a proper relationship, so that we can find the remaining data by solving the problem.*
2. $\theta + \phi \leq 90^\circ$.
3. *If $\theta + \phi = 90^\circ$, then (i) line is parallel to the profile plane, (ii) F.V. and T.V. of a line will be collinear and perpendicular to XY, (iii) $\alpha = 90^\circ$ and $\beta = 90^\circ$.*

Here an Attempt is Made to Solve Problem 9 to Problem 18 with Minimum Five Data Having the Same Master Solution, i.e. figure 8.17.

Scanned by CamScanner

Problem 10

A line AB, 70 mm long has its end A 10 mm above the H.P. and 20 mm in front of the V.P. The end B is 45 mm above the H.P. and 70 mm in front of the V.P. Draw the projections of line AB and find its inclination with the H.P. and V.P.

Solution

Refer figure 8.18 (a) and (b).

Data : T.L. of AB = 70 mm $\Rightarrow$ $a'b_1' = ab_2 = 70$ mm.

A is 10 mm above the H.P. $\Rightarrow$ a' is 10 mm above XY.

A is 20 mm infront of the V.P. $\Rightarrow$ a is 20 mm below XY.

B is 45 mm above the H.P. $\Rightarrow$ b' is 45 mm above XY.

B is 70 mm infront of the V.P. $\Rightarrow$ b is 70 mm below XY.

Stage I : With the given data, attempt to construct *figure 8.18(a)* by the following given procedure.

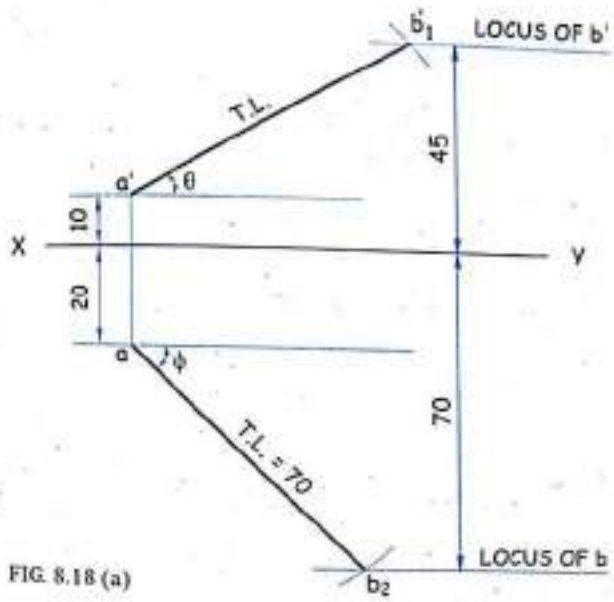

FIG. 8.18 (a)

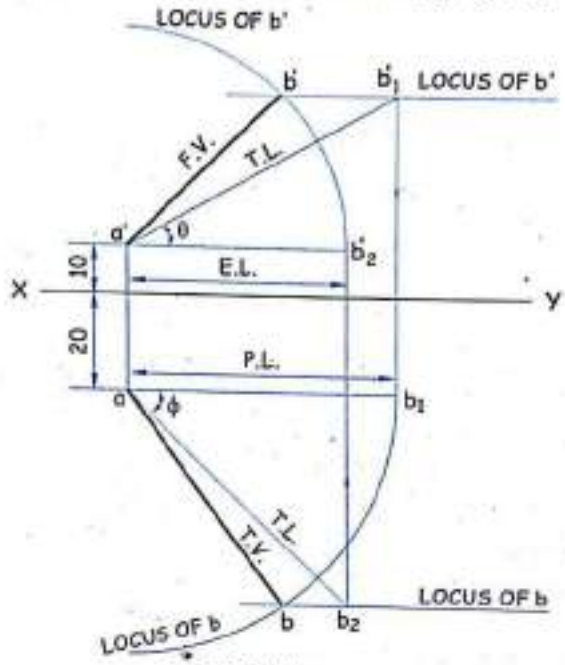

FIG. 8.18 (b)

1. Locate a' and a.
2. Draw the locus of b', 45 mm above and parallel to the XY
3. Taking T.L. = 70 mm as a radius and centre a', cut an arc on the locus of b' and locate b_1'.
4. Draw the locus of b, 70 mm below and parallel to the XY line.
5. Taking T.L. = 70 mm as a radius and centre a, cut an arc on the locus of b and locate b_2.
6. Join $a'b_1'$ and ab_2, which gives a true inclination with the H.P. (i.e. θ) and V.P. (i.e. ϕ) respectively.

Stage II : *Refer figure 8.18 (b).*

7. Obtain the plan length (P.L.) as ab_1 and the elevation length (E.L.) as $a'b_2'$.
8. Taking P.L. ab_1 as a radius and centre a, construct an arc (i.e. locus of b).
9. Locate b as a point of intersection of arc locus and st. line locus of b.
10. Taking E.L. as a radius and centre a', construct an arc (i.e. locus of b').
11. Locate b' as a point of intersection of arc locus and st. line locus of b'.
12. Join $a'b'$ and ab which are the F.V. and T.V. respectively.

Scanned by CamScanner

Problem 11

The F.V. of line AB, 70 mm long is inclined at 45° to XY, measure 50 mm. The end point A is 10 mm above the H.P. and 20 mm in front of the V.P. Draw the projections of line AB and find its inclination with the H.P. and V.P.

Solution

Refer figure 8.19.

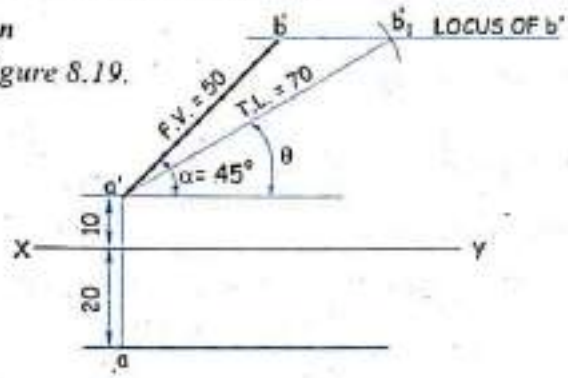

FIG. 8.19 (a)

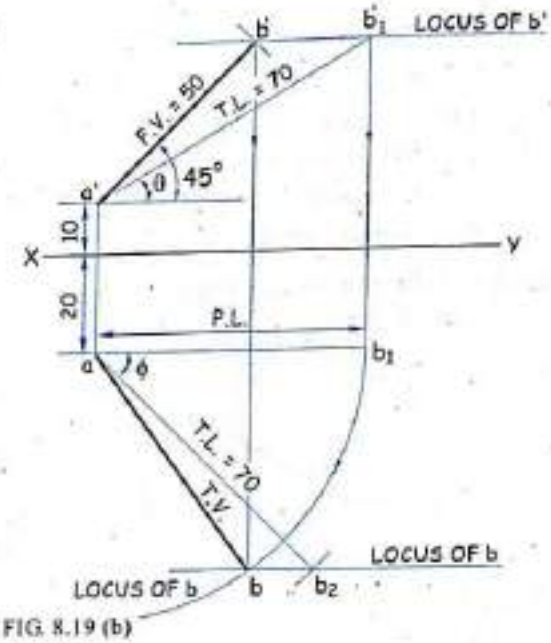

FIG. 8.19 (b)

Data : T.L. of AB = 70 mm $\Rightarrow$ $a'b_1' = ab_2 = 70$ mm.

Length of F.V. (Elevation Length) = 50 mm. $\Rightarrow$ $a'b' = a'b_2' = 50$ mm.

$\alpha = 45°$ $\Rightarrow$ $a'b'$ is at 45° to XY.

A is 10 mm above the H.P. $\Rightarrow$ a' is 10 mm above XY.

A is 20 mm in front of the V.P. $\Rightarrow$ a is 20 mm below XY.

Stage I : *Refer figure 8.19 (a).*

1. Locate a' and a.
2. Draw $a'b'$ = 50 mm at 45° to XY.
3. Through b', draw the locus of b' parallel to XY.
4. Take T.L. = 70 mm as a radius and with centre a', cut an arc on the locus of b' and mark it as b_1'.
5. Join $a'b_1'$ which is the corresponding T.L. of the assumed line AB_1, inclined at an angle θ to the H.P.

Stage II : *Refer figure 8.19 (b).*

6. Obtain P.L. as ab_1.
7. Draw the projector perpendicular to the XY line through b'.
8. Take P.L. ab_1 as a radius and with centre a, construct an arc (i.e. locus of b).
9. Mark b as a point of intersection of the projector through b' and an arc of locus of b.
10. Join ab which is the T.V.
11. Draw the locus line of b through b parallel to the XY line.
12. Take T.L. = 70 mm as a radius and with centre a, cut an arc on the locus of b, which is parallel to XY and mark b_2.
13. Join ab_2 which is the corresponding T.L. of the assumed line AB_2, inclined at an angle ϕ to the V.P.

Scanned by CamScanner

Problem 12

The T.V. of line AB, 70 mm long measures 60 mm. The end point A is 10 mm above the H.P. and 20 mm in front of the V.P. The other end point B is 70 mm in front of the V.P. and above the H.P. Draw the projections of line AB and find its inclination with the H.P. and the V.P.

Solution

Refer figure 8.20 (a) and (b).

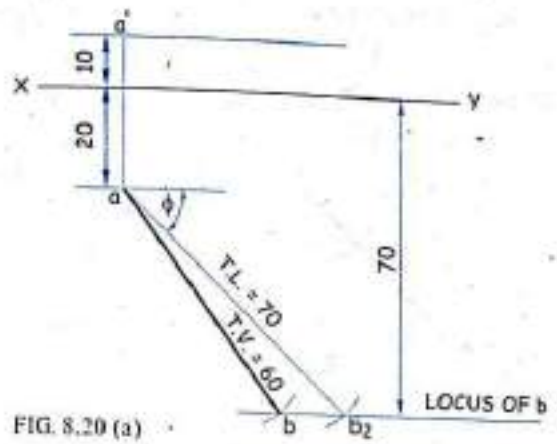

FIG. 8.20 (a)

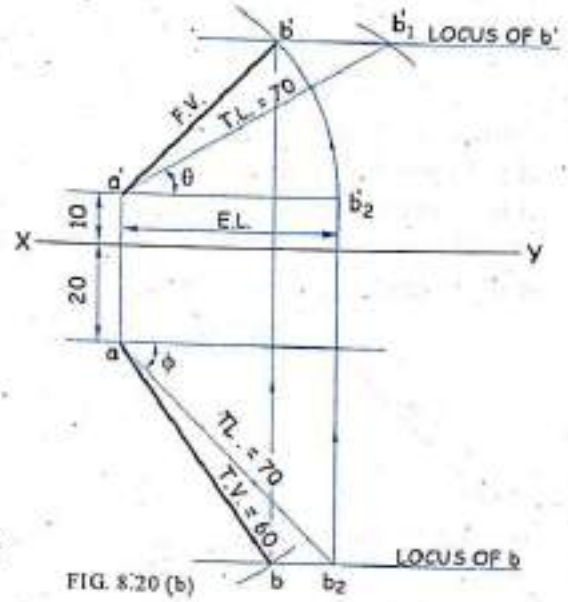

FIG. 8.20 (b)

Data : T.L. of AB = 70 mm $\Rightarrow$ $a'b_1' = ab_2 = 70$ mm.

Length of T.V. (P.L.) = 60 mm $\Rightarrow$ $ab = ab_1 = 60$ mm.

A is 10 mm above the H.P. $\Rightarrow$ a' is 10 mm above XY.

A is 20 mm in front of the V.P. $\Rightarrow$ a is 20 mm below XY.

B is 70 mm in front of the V.P. $\Rightarrow$ b is 70 mm below XY.

B is above the H.P. $\Rightarrow$ b' is above XY.

Stage I : *Refer figure 8.20 (a).*

1. Locate a' and a.
2. Draw the locus of b, 70 mm below and parallel to XY.
3. Take T.L. = 70 mm as a radius and with centre a, cut an arc on the locus of b and mark it as b_2.
4. Join ab_2 which is the corresponding T.L. of the assumed line AB_2, inclined at an angle ϕ to the V.P.
5. Take P.L. = 60 mm as a radius and with centre a, cut an arc on the locus of b and mark b.
6. Join ab which is the T.V.

Stage II : *Refer figure 8.20 (b).*

7. Obtain E.L. as $a'b_2'$.
8. Draw projector perpendicular to XY line through b.
9. With centre a' and radius equal to E.L. $a'b_2'$ cut an arc to the projector drawn through b and mark b'.
10. Join $a'b'$ which is F.V.
11. Draw the locus of b' through b' parallel to the XY line.
12. With centre a' and radius equal to T.L. = 70 mm. cut an arc on the locus of b' and mark b_1'.
13. Join $a'b_1'$ which is the corresponding T.L. of the assumed line AB_1, inclined at an angle θ to the H.P.

Scanned by CamScanner

Problem 13

The distance between the end projectors of a straight line *AB* is 35 mm. The end *A* is 10 mm above the H.P. and 20 mm in front of the V.P. while end *B* is 45 mm above the H.P. and 70 mm in front of the V.P. Draw the projections of line and determine its inclination with the H.P. and the V.P. also find its T.L.

Solution

Refer figure 8.21 (a) and (b).

Data : Distance between the end projectors (i.e. *DBEP*) = 35 mm.

A is 10 mm above the H.P. ⇒ *a'* is 10 mm above *XY*.

A is 20 mm in front of the V.P. ⇒ *a* is 20 mm below *XY*.

B is 45 mm above the H.P. ⇒ *b'* is 45 mm above *XY*.

B is 70 mm in front of the V.P. ⇒ *b* is 70 mm below *XY*.

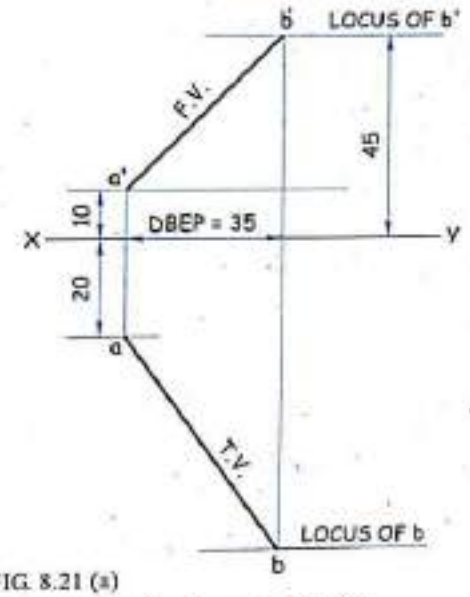

FIG. 8.21 (a)

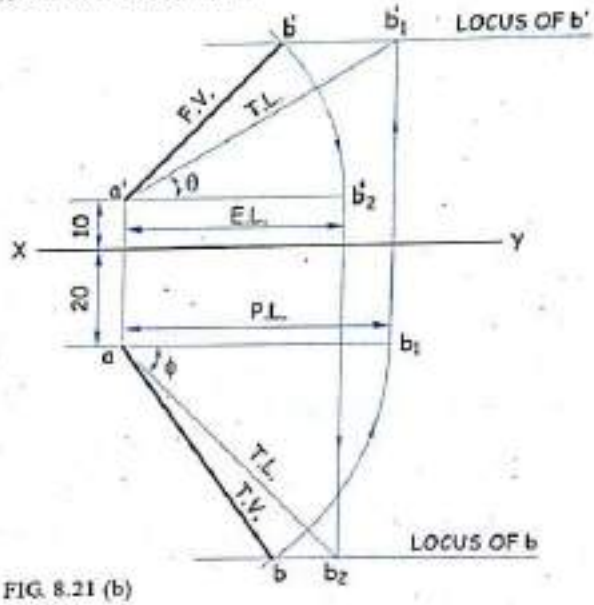

FIG. 8.21 (b)

Stage I : *Refer figure 8.21 (a).*

1. Draw two projectors (perpendicular to the *XY* line) 35 mm apart (i.e. *DBEP* = 35 mm).
2. Locate *a'* and *a* on one projector and locate *b'* and *b* on the second projector.
3. Join *a'b'* as a F.V.
4. Join *ab* as a T.V.
5. Draw the locus line of *b'* through *b'* parallel to *XY*.
6. Draw the locus line of *b* through *b* parallel to *XY*.

Stage II : *Refer figure 8.21 (b).*

7. By the rotating F.V. *a'b'* obtained E.L. $a'b_2'$ parallel to *XY*.
8. By the rotating T.V. *ab* obtained P.L. ab_1 parallel to *XY*.
9. Draw the projector vertically down through b_2' and mark b_2 on the locus line of *b*.
10. Join ab_2 as a T.L. making inclination ϕ with the V.P.
11. Draw the projector through b_1 vertically up and mark b_1' on the locus line of *b'*.
12. Join $a'b_1'$ which is T.L. making an angle θ with the H.P.

Scanned by CamScanner

Problem 14

The distance between the end projectors of a line AB is 35 mm. The line AB is 70 mm long and is inclined at 30° to the H.P. The end point A is 10 mm above the H.P. and 20 mm in front of the V.P. Draw the projections of line AB.

Solution

Refer figure 8.22 (a) and (b).

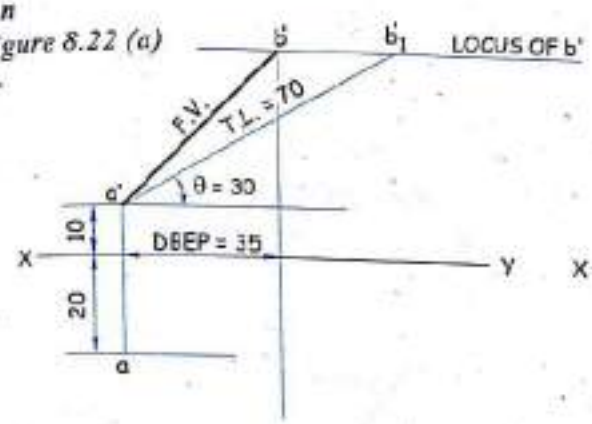

FIG. 8.22 (a)

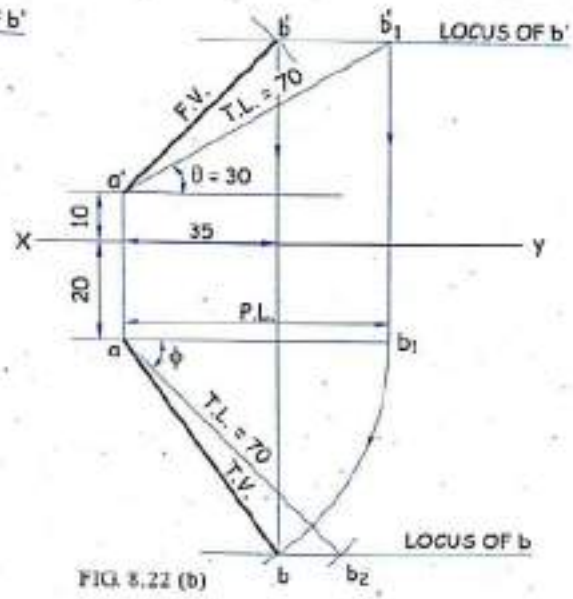

FIG. 8.22 (b)

Data : Distance between the end projectors (i.e. $DBEP$) = 35 mm.

$\theta = 30°$ $\Rightarrow$ $a'b_1'$ is at 30° to XY.

T.L. of AB = 70 mm $\Rightarrow$ $a'b_1' = ab_2 = 70$ mm.

A is 10 mm above the H.P. $\Rightarrow$ a' is 10 mm above XY.

A is 20 mm in front of the V.P. $\Rightarrow$ a is 20 mm below XY.

Stage I : *Refer figure 8.22 (a).*

1. Draw the two projectors 35 mm apart.
2. Locate a' and a on one projector and locate b' and b on the second projector.
3. Draw $a'b_1' = 70$ mm at $\theta = 30°$ to the XY line
4. Draw the locus line of b' through b_1' parallel to XY.
5. Mark b' as a intersection of the second projector and the locus line of b'.
6. Join $a'b'$ which is the F.V. of line AB.

Stage II : *Refer figure 8.22 (b).*

7. Obtain P.L. ab_1.
8. With centre a and radius equal to P.L. ab_1, cut an arc to intersect the second projector and mark b.
9. Join ab which is the T.V. of line AB.
10. Draw the locus line of b through b parallel to XY.
11. Mark b_2 with centre a and radius equal to T.L. = 70 mm on locus line of b.
12. Join ab_2 which is T.L. making an angle ϕ with the V.P.

Scanned by CamScanner

Problem 15

The F.V. of line *AB* measures 50 mm and makes an angle 45° with the *XY* line. The point *A* is 10 mm above the H.P. and 20 mm in front of the V.P. Draw the projections of line *AB* if it is inclined with the V.P. at 45°.

Solution

Refer figure 8.23 (a) and (b).

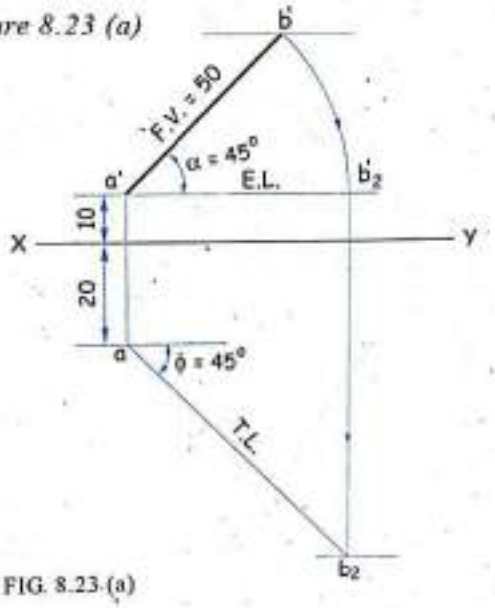

FIG. 8.23 (a)

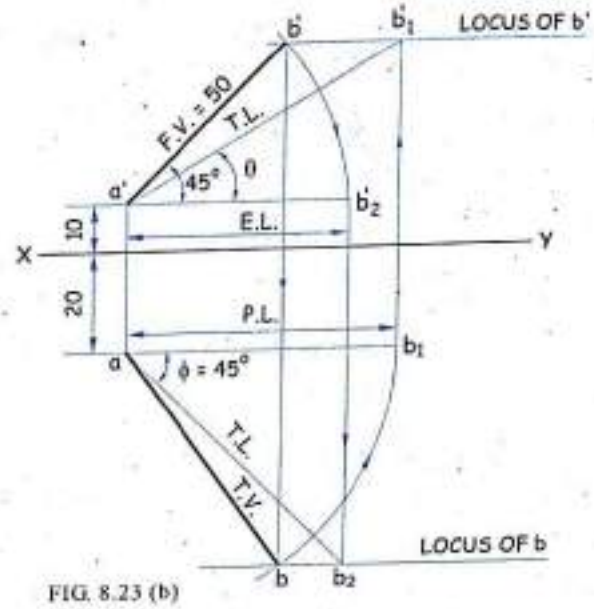

FIG. 8.23 (b)

Data : E.L. = 50 mm. ⇒ $a'b' = a'b_2' = 50$ mm.

α = 45° ⇒ $a'b'$ is at 45° to *XY*.

ϕ = 45° ⇒ ab_2 is at 45° to *XY*.

A is 10 mm above the H.P. ⇒ a' is 10 mm above *XY*.

A is 20 mm infront of the V.P. ⇒ a is 20 mm below *XY*.

Stage I

1. Locate a' and a.
2. Draw F.V. $a'b' = 50$ mm at 45° to the *XY* line.
3. Obtain E.L. $a'b_2'$ parallel to the *XY* line.
4. Draw the line from a at ϕ = 45° to *XY* and draw the projector through b_2' vertically down and mark b_2 as a point of intersection.

Stage II

5. Draw the locus line of b' through b' and locus line of b through b_2.
6. Draw the projector through b' vertically down and mark b on the locus line of b.
7. Join ab which is the T.V.
8. Draw the T.L. $a'b_1'$ by usual method.

Scanned by CamScanner

Problem 16

The F.V. and the T.V. of line AB measures 50 mm and 60 mm respectively. The line is 70 mm long. Point A is 10 mm above the H.P. and 20 mm in front of the V.P. Draw the projections of line AB and determine its inclinations with the H.P. and V.P. Assume the line to be in the Ist Quadrant.

Solution

Refer figure 8.24 (a) and (b).

Data : E.L. = 50 mm. $\Rightarrow a'b' = a'b_2' = 50$ mm.

P.L. = 70 mm $\Rightarrow ab = ab_1 = 60$ mm.

T.L. of AB = 70 mm $\Rightarrow a'b_1' = ab_2 = 70$ mm.

A is 10 mm above the H.P. $\Rightarrow a'$ is 10 mm above XY.

A is 20 mm in front of the V.P. $\Rightarrow a$ is 20 mm below XY.

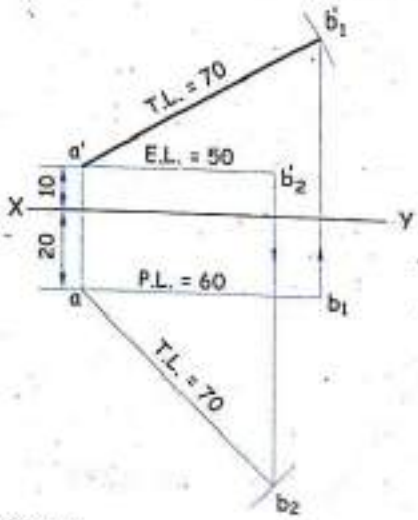

FIG. 8.24 (a)

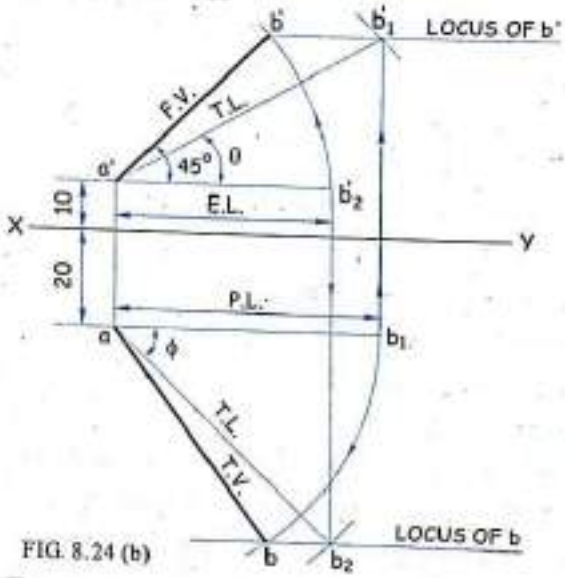

FIG. 8.24 (b)

Stage I : *Refer figure 8.24 (a).*

1. Locate a' and a.
2. Draw E.L. $a'b_2' = 50$ mm parallel to the XY line
3. Draw P.L. $ab_1 = 60$ mm parallel to the XY line
4. Draw the projector through b_1 vertically up.
5. With centre a' and radius of T.L. = 70 mm, cut an arc on the projector drawn and mark b_1'.
6. Draw the projector through b_2' vertically down.
7. With centre a and radius of T.L. = 70 mm cut an arc on projector drawn and mark b_2.
8. Join $a'b_1'$ and ab_2, which gives an inclination with the H.P. and the V.P. respectively.

Stage II : *Refer figure 8.24 (b).*

9. Draw the locus line of b' through b_1' and locus line of b through b_2 parallel to XY.
10. With centre a' and radius equal to E.L. $a'b_2' = 50$ mm, cut an arc on the locus line of b' and mark b'.
11. Join $a'b'$ which is the F.V.
12. With centre a and radius equal to P.L. $ab_1 = 60$ mm, cut an arc on the locus line of b and mark
13. Join ab which is the T.V.

Scanned by CamScanner

Problem 17

The elevation length and plan length of line AB measures 50 mm and 60 mm respectively. The line AB is inclined at 30° to the H.P. and the end point A is 10 mm above the H.P. and 20 mm in front of the V.P. Draw the projections of line AB.

Solution

Refer figure 8.25 (a) and (b).

Data : E.L. = 50 mm. $\Rightarrow a'b' = a'b_2' = 50$ mm.

P.L. = 70 mm $\Rightarrow ab = ab_1 = 60$ mm.

$\theta = 30°$ $\Rightarrow a'b_1'$ is at 30° to XY.

A is 10 mm above the H.P. $\Rightarrow a'$ is 10 mm above XY.

A is 20 mm in front of the V.P. $\Rightarrow a$ is 20 mm below XY.

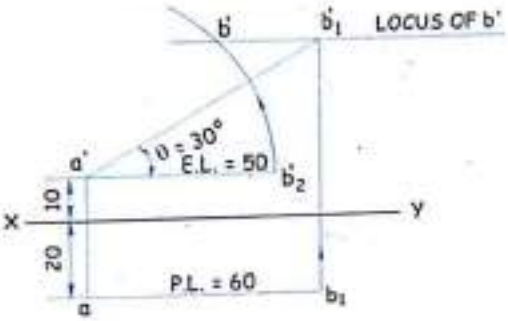

FIG. 8.25 (a)

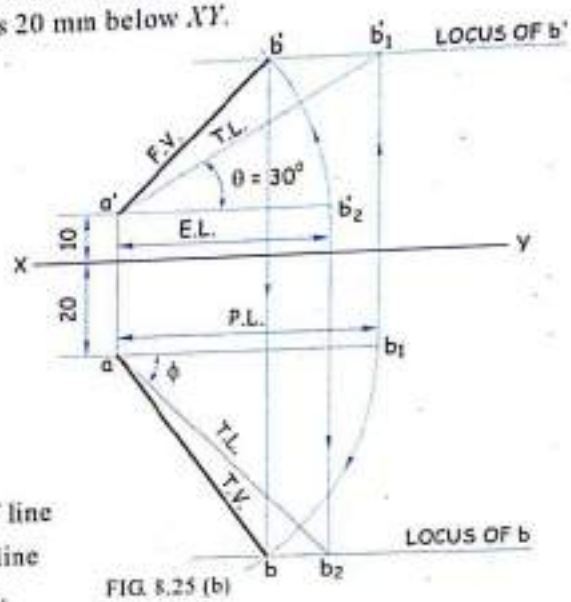

FIG. 8.25 (b)

Stage I : *Refer figure 8.25 (a).*

1. Locate a' and a.
2. Draw E.L. $a'b_2' = 50$ mm parallel to the XY line
3. Draw P.L. $ab_1 = 60$ mm parallel to the XY line
4. Draw the projector through b_1 vertically up.
5. Draw the inclined line at $\theta = 30°$ to XY through a'.
6. Mark b_1' as a point of intersection of the vertical projector and inclined line drawn down.
7. Join $a'b_1'$ which gives T.L. of line AB.
8. Draw the locus line of b' through b_1' parallel to the XY line
9. With centre a' and radius equal to E.L. $a'b_2' = 50$ mm, cut an arc and locate b' on the locus line of b'.
10. Join $a'b'$ which is the F.V. of line AB.

Stage II : *Refer figure 8.25 (b).*

11. Draw the projector vertically down through b'.
12. With centre a and radius equal to ab_1 (i.e. P.L. = 60), cut an arc to the drawn projector and mark b.
13. Join ab which gives the T.V. of line AB.
14. Draw the locus line of b through b parallel to the XY line.
15. Draw the projector through b_2' vertically down and mark b_2 on the locus line of b.
16. Join ab_2 which is corresponding true length of line and makes an angle ϕ with XY. (i.e. true inclination of line AB with the V.P.)

Scanned by CamScanner

Problem 18

The F.V. of 85 mm long straight line AB measures 60 mm while its T.V. measures 70 mm. Draw the projection of AB if its end A is 10 mm above the H.P. and 20 mm behind the V.P. while its end B is in the first quadrant. Determine the inclination of line AB with the reference plane. ***(Dec. '94, M.U.)***

Solution : *Refer figure 8.26 (a) and (b).*

Data and its Analysis :

T.L. of AB = 85 mm	$\Rightarrow$	$a'b'_1 = ab_2 = 85$ mm.
Length of *F.V.* (E.L.) = 60 mm.	$\Rightarrow$	$a'b' = a'b'_2 = 60$ mm.
Length of *T.V.* (P.L.) = 70 mm.	$\Rightarrow$	$ab = ab_1 = 70$ mm.
A is 10 mm above the H.P.	$\Rightarrow$	a' is 10 mm above XY.
A is 20 mm behind the V.P.	$\Rightarrow$	a is 20 mm above XY.
B is in the 1st quadrant	$\Rightarrow$	b' is above XY and b is below XY.

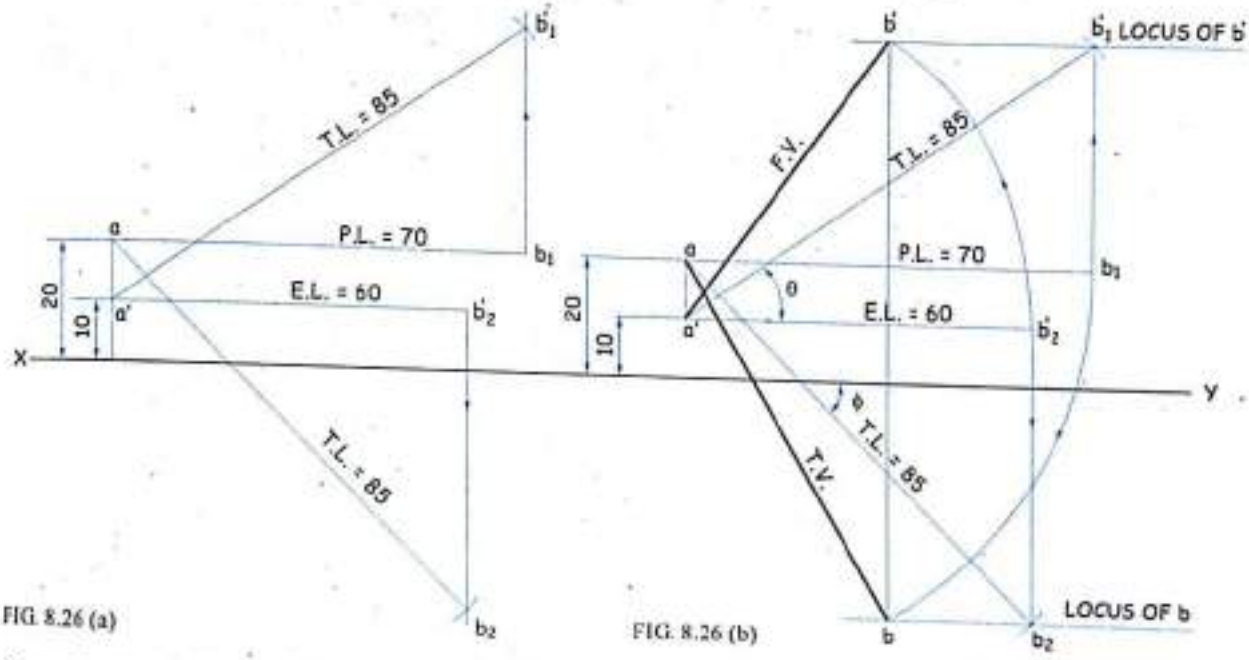

FIG. 8.26 (a) FIG. 8.26 (b)

Stage I : *Refer figure 8.26 (a).*

1. Locate a' and a.
2. Draw E.L. = $a'b'_2 = 60$ mm. and P.L. = $ab_1 = 70$ mm parallel to the XY line.
3. Draw the projector through b'_2 vertically down and through b_1 vertically up and with the given true length mark b_2 and b'_1 respectively.

Stage II : *Refer figure 8.26 (b).*

4. Draw the locus line of b and locus line of b' through b_2 and b'_1 respectively.
5. Rotate P.L. (ab_1) and mark b on the locus line of b, rotate E.L. ($a'b'_2$) and mark b' on the locus line of b'.
6. $a'b'$ and ab are the F.V. and T.V. respectively.

Scanned by CamScanner

Problem 19

The F.V. of a line AB is 60 mm long and is inclined at 60° to the XY line. The end point A is 12 mm above the H.P. and 25 mm in front of the V.P. Draw the projections of line if it is inclined at 45° to the H.P. and is located in the first dihedral angle. Find the true length and true inclinations of a line with the V.P. *(May '95, M.U.)*

Solution

Refer figure 8.27 (a) and (b).

Data and Its Analysis : Length of *F.V.* (E.L.) = 60 mm. ⇒ $a'b' = a'b_2' = 60$ mm.

$\alpha = 60°$ ⇒ $a'b'$ is at 60° to XY.

$\theta = 45°$ ⇒ $a'b_1'$ is at 45° to XY.

A is 12 mm above the H.P. ⇒ a' is 12 mm above XY.

A is 25 mm in front of the V.P. ⇒ a is 25 mm below XY.

Line AB is in the 1st dihedral angle (1st quadrant) ⇒ b' is above XY and b is below XY.

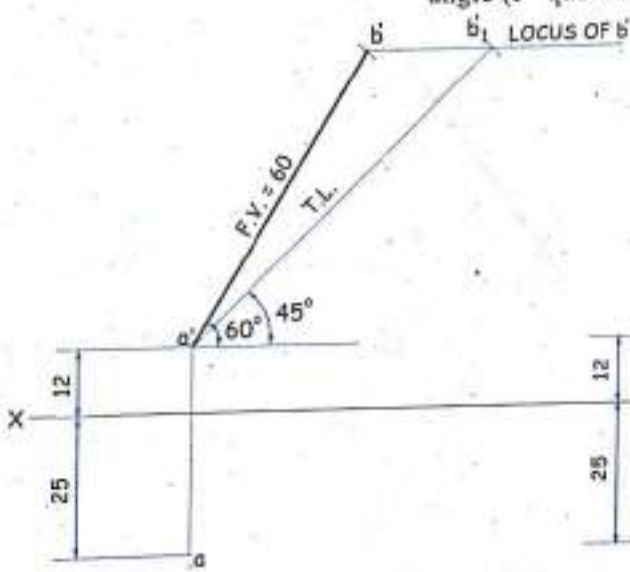

FIG. 8.27 (a)

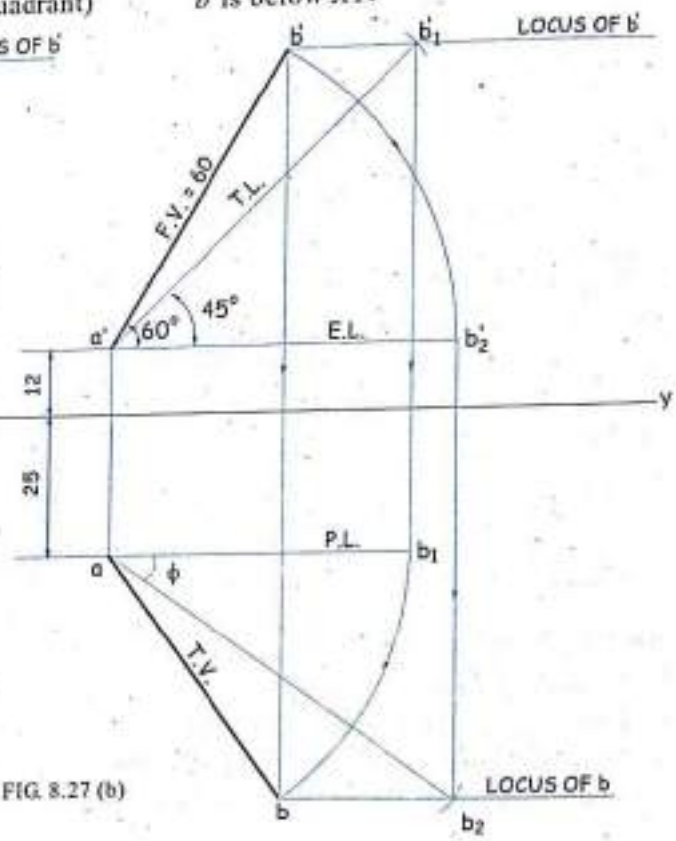

FIG. 8.27 (b)

Stage I : *Refer figure 8.27 (a).*

1. Locate a' and a. Draw $a'b' = 60$ mm. at 60° to the XY line.
2. Draw the locus line of b' through b' parallel to the XY line.
3. Draw the inclined line through a' at 45° and mark b_1' where it cuts the locus line of b'.
4. Join $a'b_1'$ and measure the true length of line AB.
5. Obtain P.L. = ab_1 and by rotating P.L., cut the projector drawn through b' to mark b.

Stage II : *Refer figure 8.27 (b).*

6. Draw the locus line of b through b parallel to the XY line.
7. Obtain E.L. = $a'b_2'$ and draw the projector through b_2' to mark b_2 on the locus line of b.
8. Join ab_2 which is the true length and it measures angle ϕ as a true inclination with the V.P.

Scanned by CamScanner

Problem 20

The plan ab of a straight line AB is 140 mm long and it makes an angle 45° with XY. The end A is in the V.P. and 85 mm from the H.P. The end B is 20 mm from the H.P. and the whole line in the fourth quadrant. Draw the projections of the line. Draw the projections, determine the true length and the inclination of line.

(May '91, M.U.)

Solution

Refer figure 8.28 (a) and (b).

Data and Its Analysis : Length of $T.V.$ (P.L.) = 140 mm. $\Rightarrow$ $ab = ab_1 = 140$ mm.

$\beta = 45°$ $\Rightarrow$ ab is at 45° to XY.

A is in V.P. $\Rightarrow$ a is on XY.

A is 85 mm from H.P. (Since line AB is in IVth quadrant) $\Rightarrow$ a' is 85 mm below XY.

B is 20 mm from H.P. (Since line AB is in IVth quadrant) $\Rightarrow$ Locus of b' is 20 mm below XY.

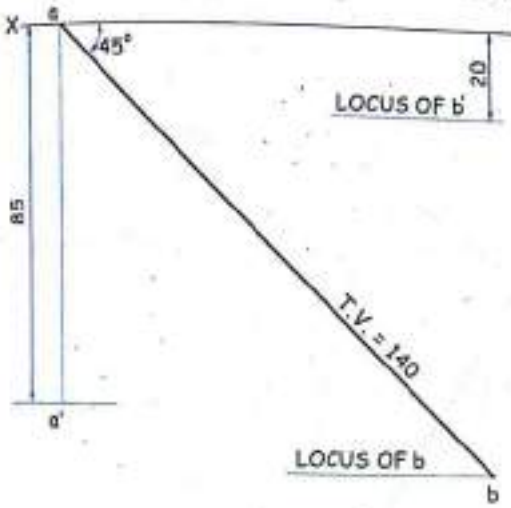

FIG. 8.28 (a)

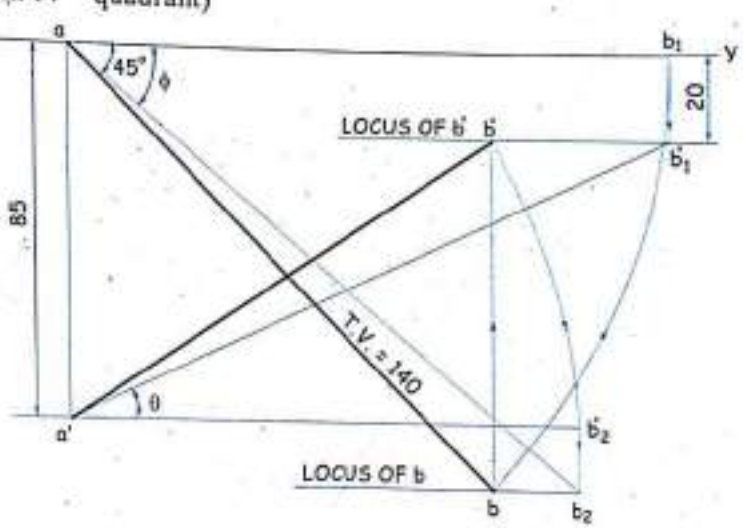

FIG. 8.28 (b)

Stage I : *Refer figure 8.28 (a).*

1. Locate a' and a. Draw $ab = 140$ mm. at 45° to the XY line.
2. Draw the locus line of b through b. Draw the locus line of b' 20 mm below the XY line.

Stage II : *Refer figure 8.28 (b).*

3. Draw the projector through b vertically up and mark b' on the locus line of b' as a point of intersection. Join $a'b'$ which is the F.V.
4. With centre a' and radius equal to $a'b'$, draw an arc and mark b'_2 on the horizontal line drawn through a'.
5. Draw the projector through b'_2 vertically down and mark b_2 on the locus line of b.
6. Join ab_2 which is the T.L. making an angle ϕ with the V.P.
7. With centre a and radius equal to ab draw an arc and mark b_1 on horizontal line drawn through a.
8. Draw the projector through b_1 vertically down and mark b'_1 on the locus line of b'.
9. Join $a'b'_1$ which is the T.L. making an angle θ with the H.P.

Scanned by CamScanner

Problem 21

Distance between the end projectors of line *AB* are 70 mm apart and *A* is 30 mm below the H.P. and 50 mm behind the V.P. and *B* is 20 mm above the H.P. and 65 mm in front of the V.P. Draw the projections of line *AB* and determine its true length and true inclination with the H.P. and the V.P.

Solution

Refer figure 8.29 (a) and (b).

Data and Its Analysis : Distance between the end projectors (*DBEP*) = 70 mm

A is 30 mm below the H.P. ⇒ *a'* is 30 mm below *XY*.

A is 50 mm behind V.P. ⇒ *a* is 50 mm above *XY*.

B is 20 mm above the H.P. ⇒ *b'* is 20 mm above *XY*.

B is 65 mm in front of the V.P. ⇒ *b* is 65 mm below *XY*.

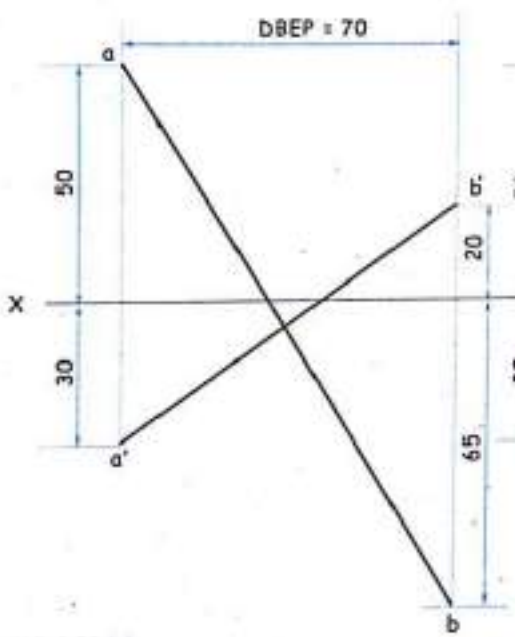

FIG. 8.29 (a)

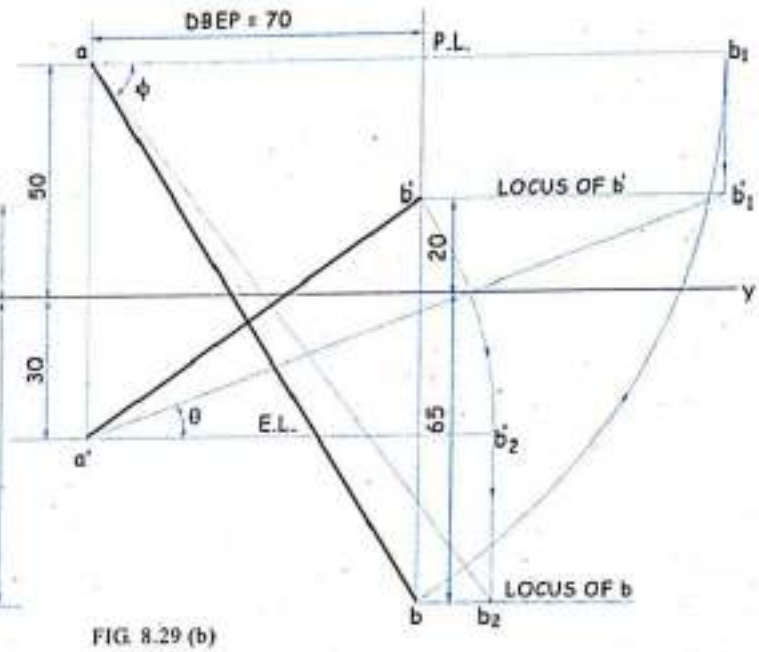

FIG. 8.29 (b)

Stage I : *Refer figure 8.29 (a).*

1. Draw two projectors 70 mm apart.
2. Locate *a'* and *a* on one projector and *b'* and *b* on the second projector.
3. Join *a'b'* and *ab* which represents F.V. and T.V. respectively.

Stage II : *Refer figure 8.29 (b).*

4. Draw the locus line of *b'* and *b* through *b'* and *b* parallel to the *XY* line.
5. Obtain E.L. = $a'b'_2$ and P.L. = ab_1.
6. Draw the projectors through b'_2 and b_1 on the locus line of *b* and b' to mark b_2 and b'_1 respectively.
7. $a'b'_1$ and ab_2 are the true lengths and the angles θ and ϕ are the true inclinations with the H.P. and V.P. respectively.

Scanned by CamScanner

Problem 22

The end A of a straight line AB 90 mm long, is in the second quadrant and 15 mm from both the H.P. and the V.P. End B is in the IIIrd quadrant. The line is inclined at 30° with the H.P. and the distance between the end projectors measured parallel to the XY line is 60 mm. Draw the projections of line, find its inclination with the V.P.

(May '96, M.U.)

Solution

Refer figure 8.30 (a) and (b).

Data and Its Analysis :

T.L. of AB = 90 mm ⇒ $a'b_1' = ab_2$ = 90 mm.

A is in IInd quadrant and 15 mm from both the H.P. and the V.P. ⇒ a' and a both are 15 mm above XY.

$\theta = 30°$ ⇒ $a'b_1'$ is at 30° to XY.

Distance between the end projectors ($DBEF$) = 60 mm.

B is in IIIrd quadrant ⇒ b' is below the XY line and b is above the XY line.

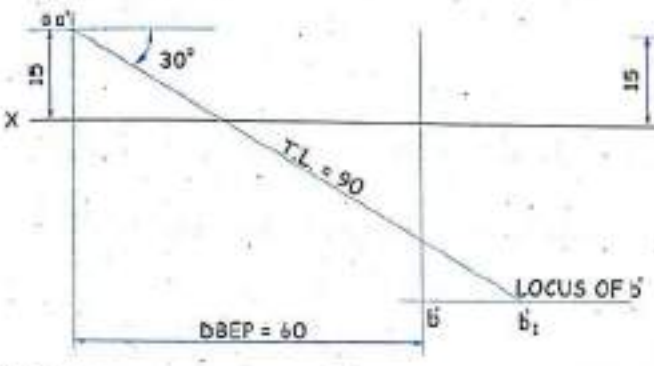

FIG. 8.30 (a)

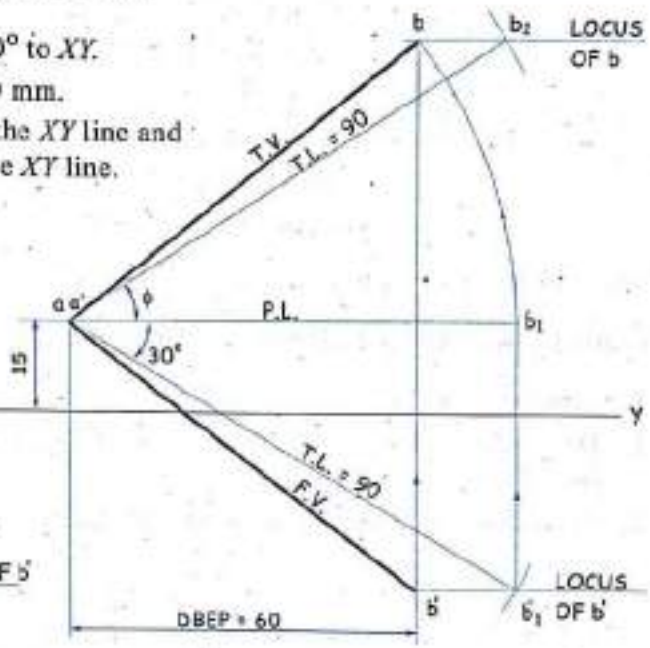

FIG. 8.30 (b)

Stage I : *Refer figure 8.30 (a).*

1. Locate a' and a on the same projector as a common point.
2. Draw $a'b_1'$ = 90 mm through a' at an angle 30° to the XY line.
3. Draw the locus line of b' through b_1' parallel to the XY line.
4. Draw the another projector at a distance of 60 mm from aa' projector and mark b' where it intersects the locus of b'.

Stage II : *Refer figure 8.30 (b).*

5. Join $a'b'$ which is the F.V. By projecting b_1' vertically up, obtain P.L. ab_1.
6. With centre a and radius equal to ab_1, cut an arc to the projector drawn through b' and mark b.
7. Join ab which is the T.V. Draw the locus line of b parallel to XY.
8. With centre a and radius equal to T.L. = 90 mm, cut an arc on the locus line of b and mark b_2.
9. Join ab_2 which gives the true inclination of line with the V.P. (i.e. ϕ).

Scanned by CamScanner

Problem 23

The line PQ 100 mm long, is inclined at 30° to the H.P. and at 45° to the V.P. Its mid-point is in the V.P. and 20 mm above the H.P. Draw the projections, if its end P is in the third quadrant and Q in the first quadrant. *(May '92, M.U.)*

Solution

Refer figure 8.31 (a), (b) and (c).

Data and Its Analysis : T.L. of PQ = 100 mm $\Rightarrow p'_1 q'_1 = p_2 q_2 = 100$ mm.

Assume M is the mid-point of line PQ.

T.L. of $PM = MQ = 50$ mm $\Rightarrow m'q'_1 = mq_2 = m'p'_1 = mp_2 = 50$ mm.

Mid-point M is in the V.P. $\Rightarrow m$ is on XY.

Mid-point M is 20 mm above the H.P. $\Rightarrow m'$ is 20 mm above XY.

$\theta = 30°$ $\Rightarrow m'q'_1$ and $m'p'_1$ is at 30° to XY.

$\phi = 45°$ $\Rightarrow mq_2$ and mp_2 is at 45° to XY.

Q is in Ist quadrant $\Rightarrow q'$ is above XY and q is below XY.

P is in IIIrd quadrant $\Rightarrow p'$ is below XY and p is above XY.

Stage I : *Refer figure 8.31 (a).*

Consider Half of the Line PQ (i.e. MQ).

1. Locate m' and m.
2. Draw $m'q'_1$ and mq_2 each equal to half of the line PQ (i.e. 50 mm) with inclination 30° and 45° to the XY line respectively.
3. Draw the locus line of q' and q through q'_1 and q_2 parallel to the XY line respectively.

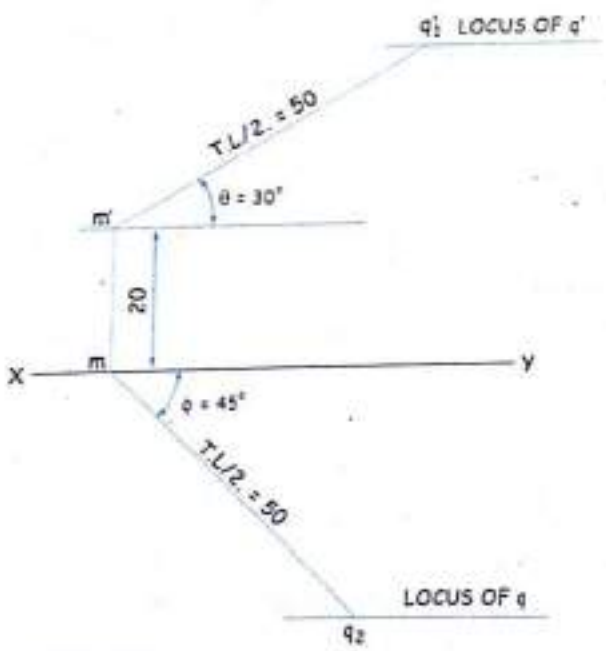

FIG. 8.31 (a)

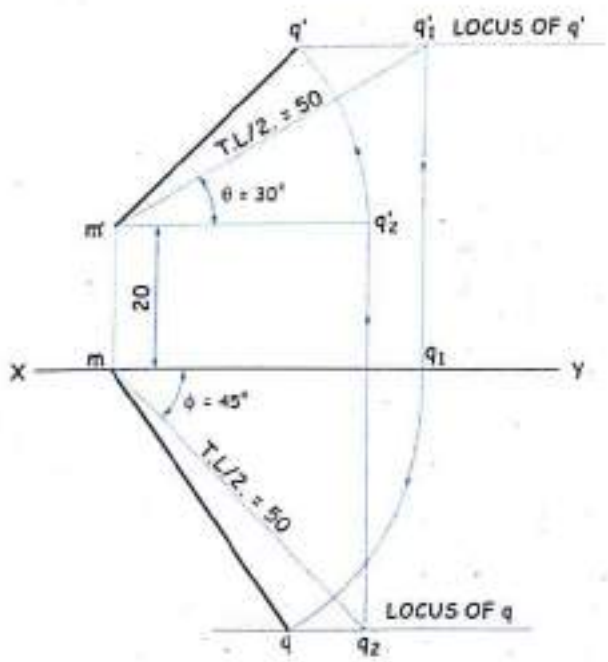

FIG. 8.31 (b)

Scanned by CamScanner

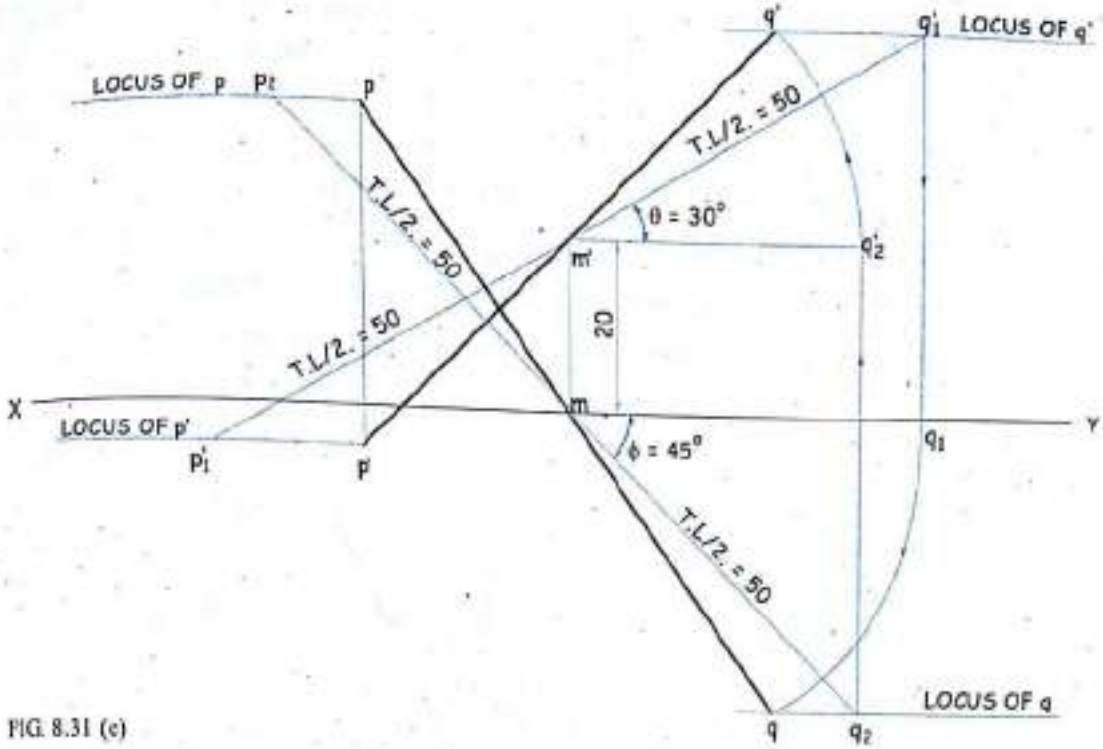

FIG. 8.31 (c)

Stage II : *Refer figure 8.31 (b).*

4. Fixing a point M, we can obtain F.V. $m'q'$ and T.V. mq by usual method.

Stage III : *Refer figure 8.31 (c).*

5. Extend the line $m'q'_1$ towards the XY line and mark p'_1 such that $m'q'_1 = m'p'_1 = 50$ mm.
6. Extend the line mq_2 on the upper side and mark p_2 such that $mq_2 = mp_2 = 50$ mm.
7. Draw the locus line through p'_1 and p_2 parallel to XY.
8. Extend the line $m'q'$ towards the XY line till the locus line of p' and mark p'.
9. Extend the line mq on the upper side till the locus line of p and mark p.
10. $p'q'$ is the F.V. and pq is the T.V. of line PQ.

Problem 24

A line PQ 110 mm long, has its mid-point M 20 mm above the H.P. and 15 mm in front of the V.P. The F.V. and T.V. of line measures 70 mm and 90 mm respectively. Draw the projections of line if its end P is in the IIIrd quadrant and Q is in the Ist quadrant.

Solution

Refer figure 8.32 (a) and (b).

Data and Its Analysis : T.L. of PQ = 110 mm $\Rightarrow$ $p'_1q'_1 = p_2q_2 = 110$ mm.

Since M is the mid-point of line PQ.

T.L. of $PM = MQ = 55$ mm $\Rightarrow$ $m'q'_1 = mq_2 = m'p'_1 = mp_2 = 55$ mm.

Scanned by CamScanner

M is 15 mm in front of the V.P. $\Rightarrow$ m is 15 mm below XY.

M is 20 mm above the H.P. $\Rightarrow$ m' is 20 mm above XY.

P is in IIIrd quadrant $\Rightarrow$ p' is below XY and p is above XY.

Q is in 1st quadrant $\Rightarrow$ q' is above XY and q is below XY.

Length of $F.V.$ = 70 mm and length of $T.V.$ = 90 mm

Therefore, half of line PQ (i.e. MQ) will have

Length of $F.V.$ = 35 mm $\Rightarrow$ $m'q' = m'q'_2$ = 35 mm.

Length of $T.V.$ = 45 mm $\Rightarrow$ $mq = mq_1$ = 45 mm.

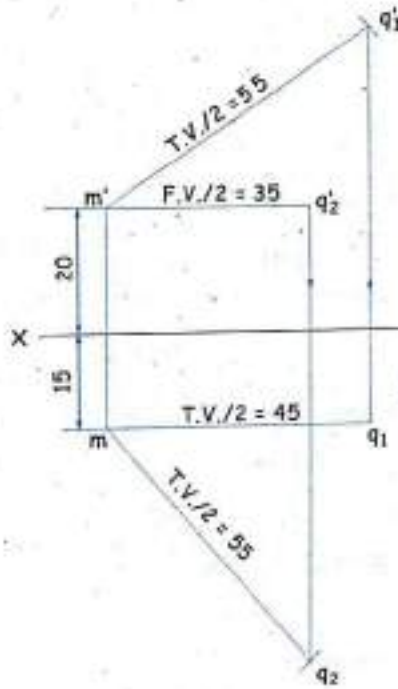

FIG. 8.32 (a)

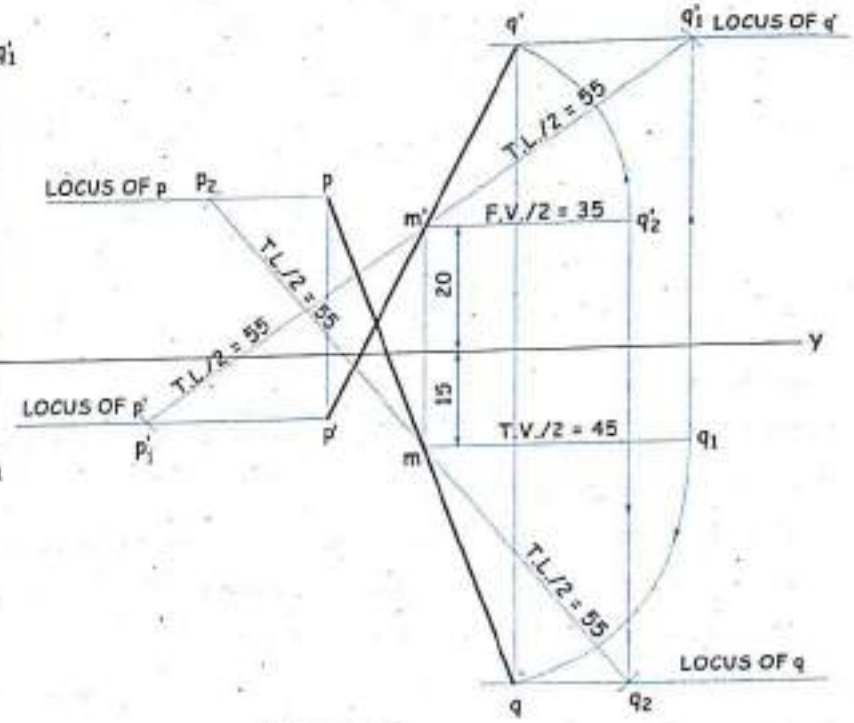

FIG. 8.32 (b)

Stage I : *Refer figure 8.32 (a).*

1. Considering half of the line PQ (i.e. MQ), with the given data we can draw *figure 8.32(a)*.

Stage II : *Refer figure 8.32 (b).*

2. Draw the locus line through q'_1 and q_2.
3. Fixing the point M, we can locate q' and q as shown.
4. Join $m'q'$ and mq as a projection of line MQ.
5. Repeat the similar procedure as discussed in the previous problem to get the complete solution.

Scanned by CamScanner

Problem 25

A line AB, 90 mm long has its one end A in the H.P. and 35 mm behind the V.P. and other end B in the V.P. and 55 mm below the H.P. Draw the projections of line and find its inclination with the H.P. and the V.P.

Solution : *Refer figure 8.33.*

Data and Its Analysis :

T.L. of AB = 90 mm	$\Rightarrow$	$a'b'_1 = ab_2 = 90$ mm.
A is in the H.P.	$\Rightarrow$	a' is on XY.
A is 35 mm behind the V.P.	$\Rightarrow$	a is 35 mm above XY.
B is in the V.P.	$\Rightarrow$	b is on XY.
B is 55 mm below the H.P.	$\Rightarrow$	b' is 55 mm below XY.

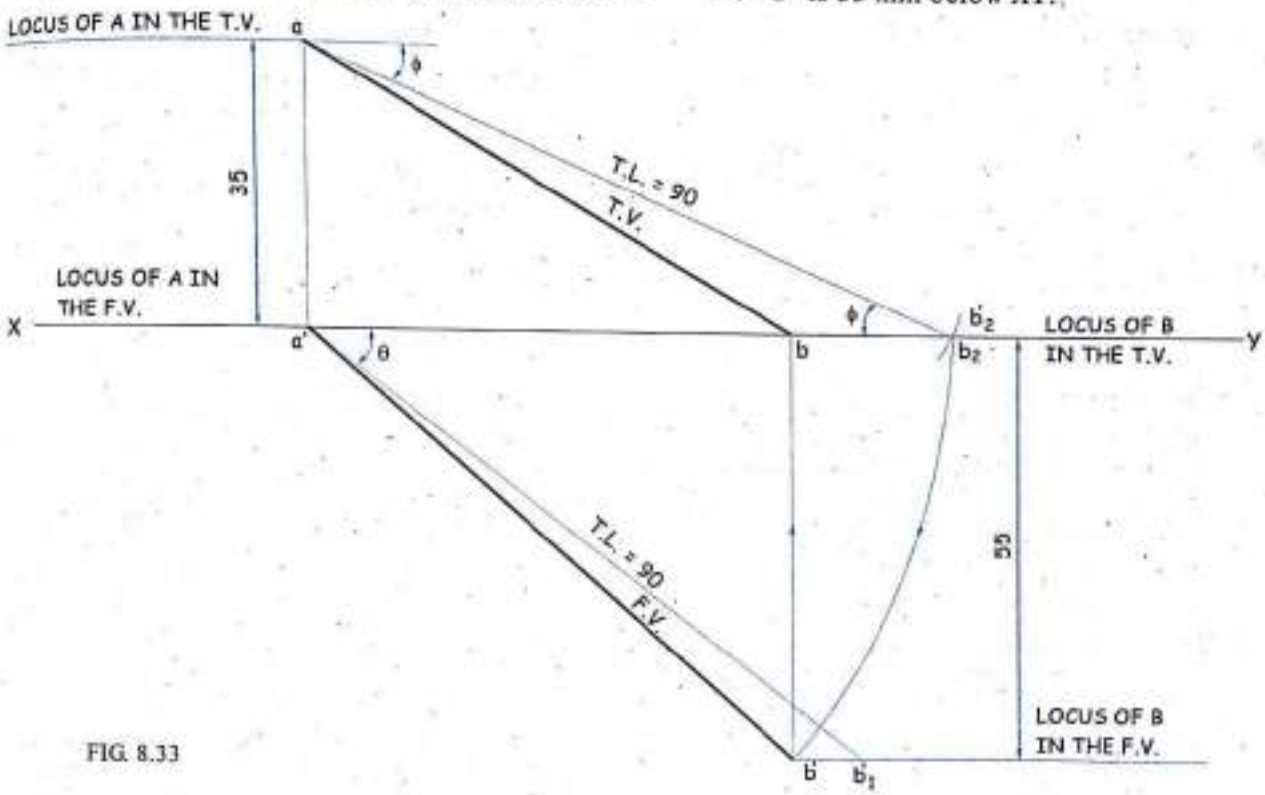

FIG. 8.33

1. As end A is in the H.P. and 35 mm behind the V.P., the locus of A in the T.V. will lie 35 mm above the XY line and locus of A in the F.V. will lie on the XY line.
2. As end B is in the V.P. and 55 mm below the H.P., the locus of B in the F.V. will lie 55 mm below the XY line and locus of B in the T.V. will lie on the XY line.
3. Locate a and a'.
4. With centre a and radius equal to T.L. = 90 mm, cut an arc on the XY line and mark b_2. (Here b_2 and b'_2 are the same points.)
5. With centre a' and radius equal to ab'_2, cut an arc to the locus line of B drawn 55 mm below XY and mark b'.
6. Draw the projector through b' vertically up and mark b on the XY line.
7. Join ab and $a'b'$ which represents T.V. and F.V. of line AB respectively.
8. True length ab_2 and $a'b'_1$ measures true inclination ϕ and θ with the V.P. and H.P. respectively.

Scanned by CamScanner

Problem 26

Draw the projections of a line *AB* 90 mm long. Its mid-point *M* being 50 mm above the H.P. and 40 mm in front of the V.P. The end *A* is 20 mm above the H.P. and 10 mm in front of the V.P. Show the inclinations of a line with the H.P. and the V.P.

Solution

Refer figure 8.34.

Data and Its Analysis :

T.L. of line *AB* = 90 mm $\Rightarrow$ $a_1' b_1' = a_2 b_2 = 90$ mm.

Mid point *M* is 50 mm above the H.P. $\Rightarrow$ m' is 50 mm above *XY*.

M is 40 mm in front of the V.P. $\Rightarrow$ m is 40 mm below *XY*.

A is 20 mm above the H.P. $\Rightarrow$ a' is 20 mm above *XY*.

A is 10 mm in front of the V.P. $\Rightarrow$ a is 10 mm below *XY*.

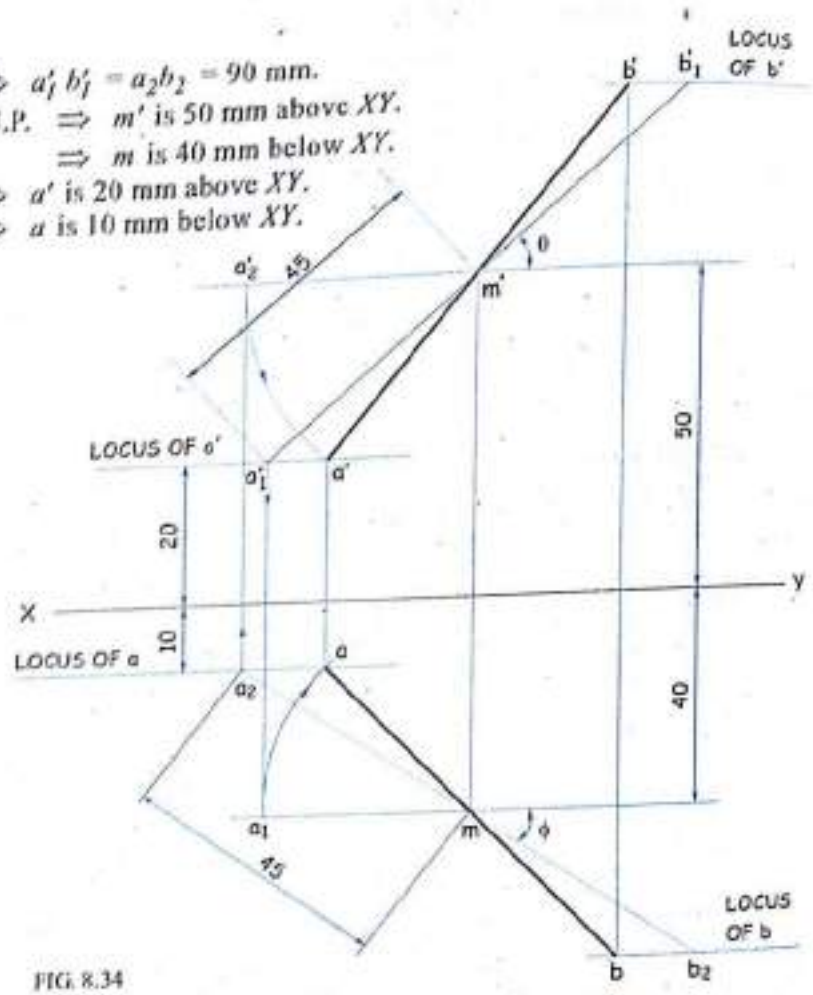

FIG. 8.34

1. Locate m' and m.
2. Draw the locus line of a' 20 mm above *XY* and the locus line of a 10 mm below *XY*.
3. Take half of T.L. (i.e. 45 mm) as a radius and with centre m', mark a_1' on the locus line of a' and with centre m, mark a_2 on the locus line of a.
4. Draw a projector through a_2 vertically up and obtain $m'a_2'$ parallel to *XY*, with centre m' and radius $m'a_2'$, cut an arc on the locus line of a' to mark a'.
5. Draw a projector through a_1' vertically down and obtain ma_1 parallel to *XY*, with centre m and radius ma_1, cut an arc on the locus line of a to mark a.
6. Extend line $a_1' m'$ such that $a_1' m' = m'b_1' = 45$ mm to get b_1'.
7. Line $a_1' b_1'$ is the true length and angle θ to the *XY* line obtained by it, is the true inclination of line *AB* with the H.P.
8. Draw the locus line of b' through b_1'.
9. Extend line $a'm'$ and mark b' where the line intersects the locus of b'.
10. $a'b'$ is the F.V. of line *AB*.
11. With similar procedure, obtain a_2b_2 true length and angle ϕ to the *XY* line as the true inclination with the V.P. and also draw ab as the T.V. of line *AB*.

Scanned by CamScanner

Problem 27

The plan of 100 mm line AB measures 70 mm. Point A is 10 mm below the H.P. and 60 mm in front of the V.P. Point B is above the H.P. and 15 mm in front of the V.P. Draw the projections of line, determine its true inclinations with the H.P. and the V.P.

(May '93, M.U.)

Solution

Data and Its Analysis :

T.L. of AB = 100 mm $\Rightarrow a'b_1' = ab_2 = 100$ mm.

Plan length of AB = 70 mm $\Rightarrow ab = ab_1 = 70$ mm.

A is 10 mm below the H.P. $\Rightarrow a'$ is 10 mm below XY.

A is 60 mm in front of the V.P. $\Rightarrow a$ is 60 mm below XY.

B is above the H.P. $\Rightarrow b'$ is above XY.

B is 15 mm in front of the V.P. $\Rightarrow b$ is 15 mm below XY.

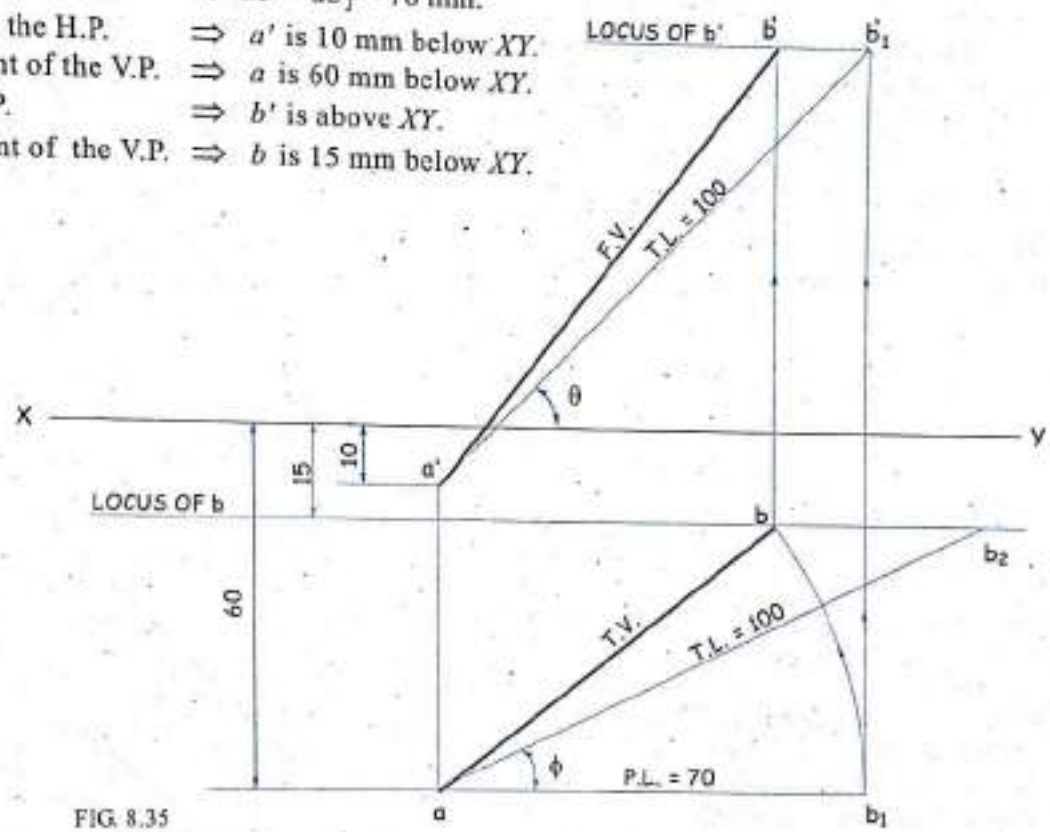

FIG. 8.35

Refer figure 8.35.

1. Locate a' and a. Draw the locus line of b 15 mm below and parallel to XY.
2. Draw ab_1 as P.L. = 70 mm parallel to XY.
3. With centre a and radius equal to P.L. cut an arc to locus line of b and mark b.
4. Join ab which is the T.V. of line.
5. Draw projector through b_1 vertically up and with centre a' and radius equal to T.L. = 100 mm cut an arc to the projector to mark b_1'.
6. Draw locus line of b' through b_1' parallel to XY. Draw projector through b vertically up to cut the locus line and mark b'.
7. Join $a'b'$ which is the F.V. of the line.
8. Obtain the T.L. ab_2 which measures angle ϕ as a true inclination with the V.P.

Scanned by CamScanner

Problem 28

Elevation of a line AB is 75 mm and is inclined to XY line at 45°. End A is 25 mm above H.P. and end B is 10 mm behind V.P. Draw its projections if length of line AB is 95 mm and end B is in third quadrant. Find the inclination of the line AB with H.P. and V.P. ***(May '99, M.U.)***

Solution

Data and Its Analysis :

Length of F.V. = 75 mm. ⇒ $a'b'$ = 75 mm.

$\alpha = 45°$ ⇒ $a'b'$ is at 45° to XY.

A is 25 mm above H.P. ⇒ a' is 25 mm above XY.

B is 10 mm behind V.P. ⇒ b is 10 mm above XY.

B is in third quadrant. ⇒ b is above and b' is below XY.

T.L. of line AB = 95 mm.

Refer figure 8.36.

It is self explanatory.

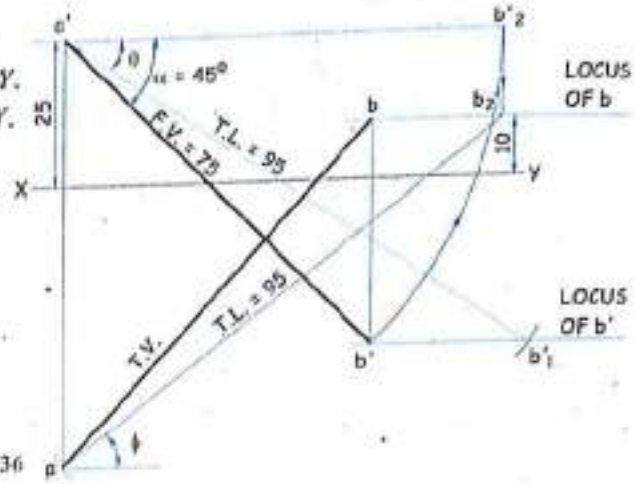

FIG. 8.36

Problem 29

The plan of 100 mm line PQ measures 80 mm. Point P is 30 mm in front of V.P. and end Q 50 mm above H.P. The end P is in fourth quadrant and end Q is in second quadrant. The line is inclined at 30° to V.P. Draw its projections. Also find its inclinations with H.P. ***(Dec. '99, M.U.)***

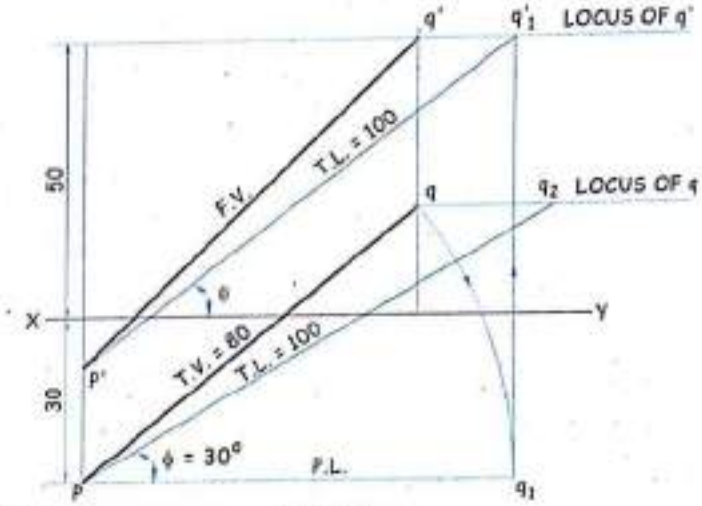

FIG. 8.37

Solution

Data and Its Analysis :

T.L. of PQ is 100 mm. ⇒ $p'q'_1 = pq_2$ = 100 mm.

The plan of line is 80 mm. ⇒ pq = 80 mm.

P is 30 mm in front of V.P. ⇒ p is 30 mm below XY.

Q is 50 mm above H.P. ⇒ q' is 50 mm above XY.

$\phi = 30°$ ⇒ pq_2 is inclined at 30° to XY.

P is in fourth quadrant. ⇒ p and p' is below XY.

Q is in second quadrant. ⇒ q and q' is above XY.

Refer figure 8.37. It is self explanatory.

Scanned by CamScanner

Problem 30

A straight line AB is 80 mm long. It is inclined at 45° to the H.P. and its top view is inclined at 60° to XY line. The end A of the line, which is farthest from V.P., is in the H.P. and 65 mm behind the V.P. Draw the projections of the line AB and find true inclination with the V.P., if the line is in the third quadrant. Find the shortest distance of the line AB from the ground line XY. ***(May '2000, M.U.)***

Solution

Data and Its Analysis :

T.L. of AB = 80 mm $\Rightarrow a'b_1' = ab_2 = 80$ mm.

$\theta = 45°$ $\Rightarrow a'b_1'$ is at 45° to XY.

$\beta = 60°$ $\Rightarrow ab$ is at 60° to XY.

A is 65 mm behind the V.P. $\Rightarrow a$ is 65 mm above XY.

A is in the H.P. $\Rightarrow a'$ is on XY.

Line AB is in third quadrant $\Rightarrow ab$ is above and $a'b'$ is below XY.

Refer figure 8.38.

It is self explanatory.

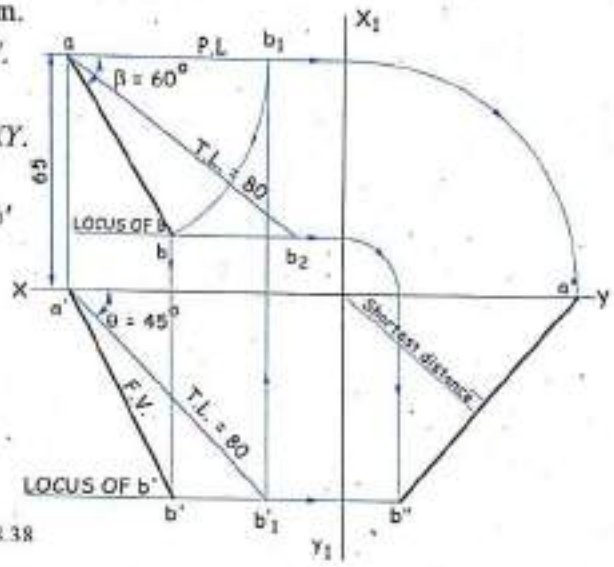

FIG. 8.38

Problem 31

End A of line AB is in second quadrant; and is 40 mm and 15 mm from HP and VP respectively. The line is inclined at 40° to both reference planes. Draw is projections when end B is in third quadrant and 45 mm from HP. Find its true length and distance of end B from V.P.

(July '02, M.U.)

Solution

Refer figure 8.39.

It is self explanatory.

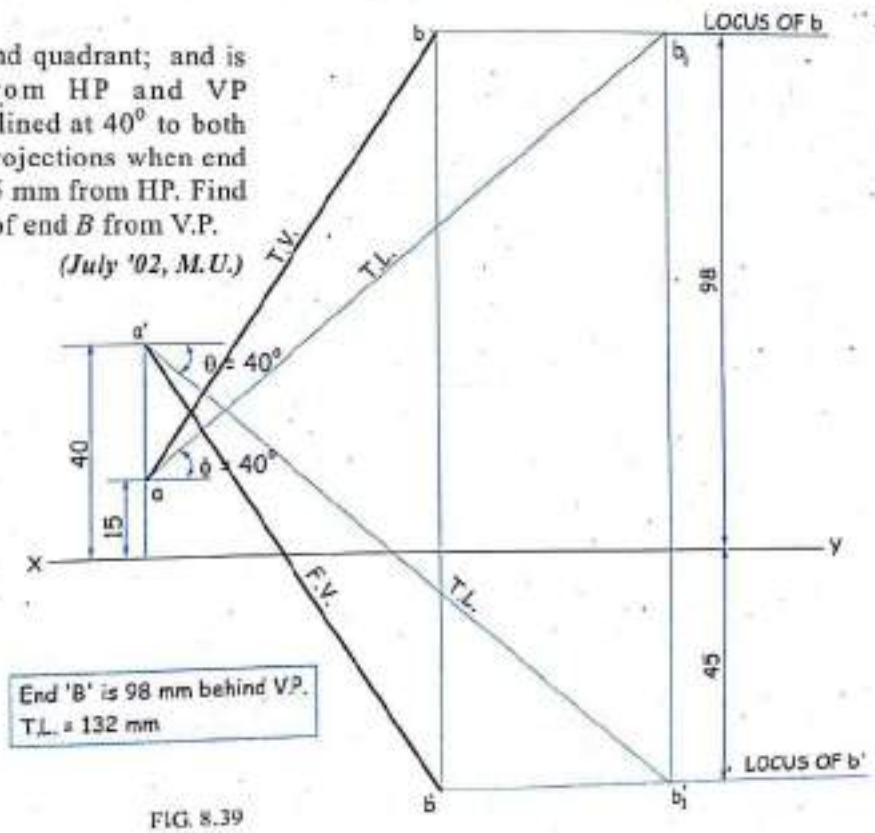

FIG. 8.39

Scanned by CamScanner

Problem 32

Draw the projections of a line *AB* 90 mm long. Its midpoint *M* being 50 mm above the HP and 40 mm in front of the VP. The end *A* is 20 mm above the HP and 10 mm in front of the VP. Show the inclinations of the line with HP and the VP.

(Jan. '03, M.U.)

Solution

Refer figure 8.40.

It is self explanatory.

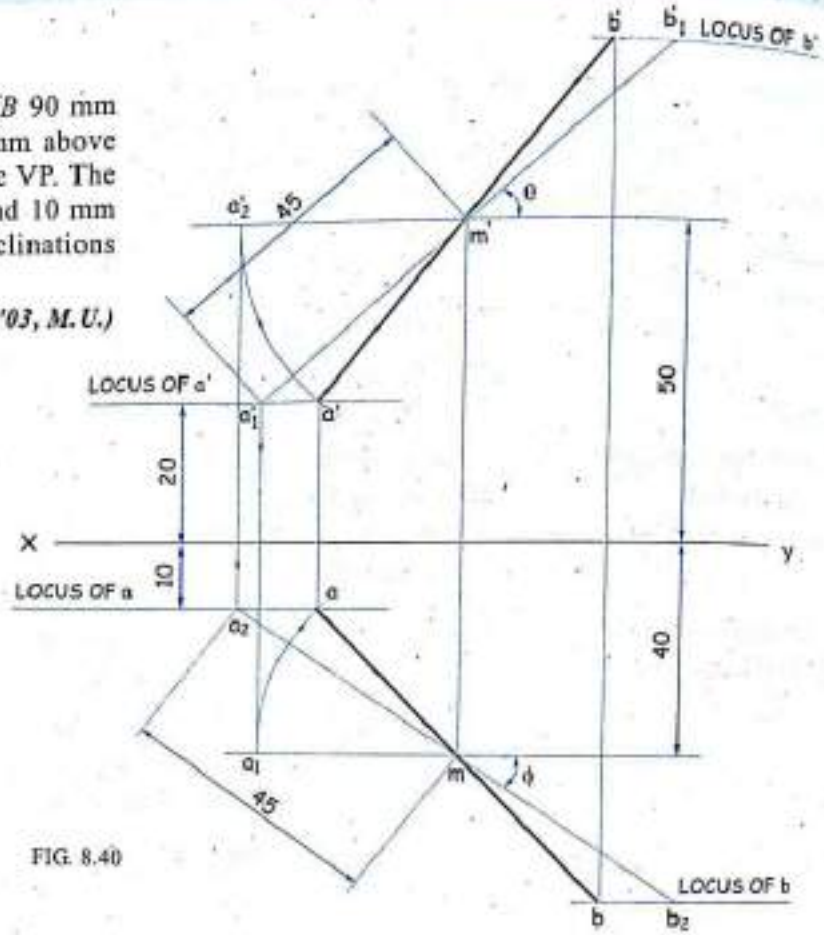

FIG. 8.40

Problem 33

A line *PQ* has its end *P* 15 mm above H.P. and 25 mm in front of V.P. The line makes an angle of 20° with the H.P. and its top view measures 90 mm. The end *Q* is in second quadrant and is equidistant from both the reference planes. Draw the projections of the line and find inclination of the line with the V.P.

(May '03, Dec. '07, M.U.)

Solution

Refer figure 8.41.

It is self explanatory.

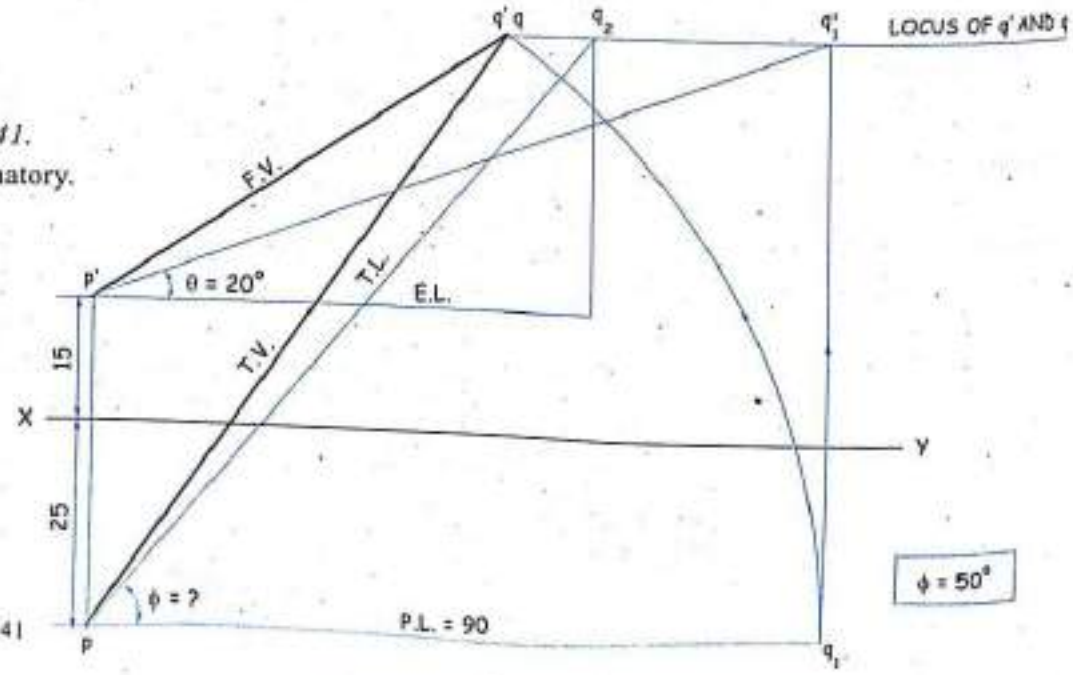

FIG. 8.41

Scanned by CamScanner

Problem 34

The line *RS*, 100 mm long has its mid-point *M* 40 mm above H.P. and 35 mm in front of V.P. Its front view measures 90 mm and its top view measures 75 mm. The point *S* is in the first quadrant. Draw its projections and find its true inclinations with H.P. and V.P.

(Dec. '03, M.U.)

Solution

Refer figure 8.42.

It is self explanatory.

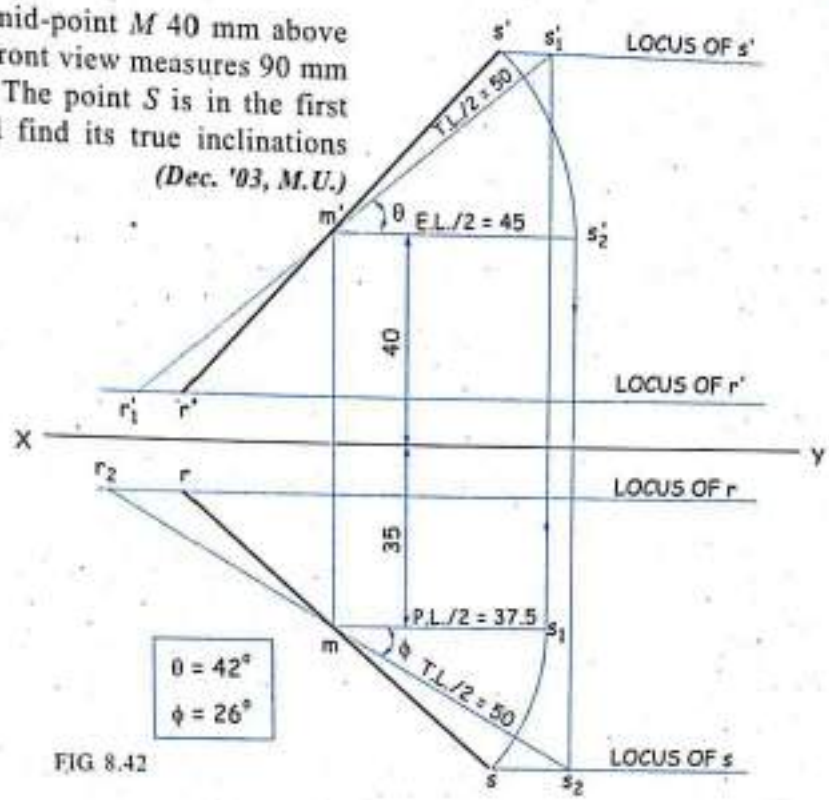

FIG. 8.42

Problem 35

The distance between the end projectors of line *PQ* is 50 mm. The end *P* is 45 mm behind VP and 10 mm below HP. The end *Q* is 30 mm above HP and 40 mm in front of VP. Draw the projections of line; determine the true length of line and the true inclination of the line with both the reference plane.

(June '04, M.U.)

Solution

Refer figure 8.43.

It is self explanatory.

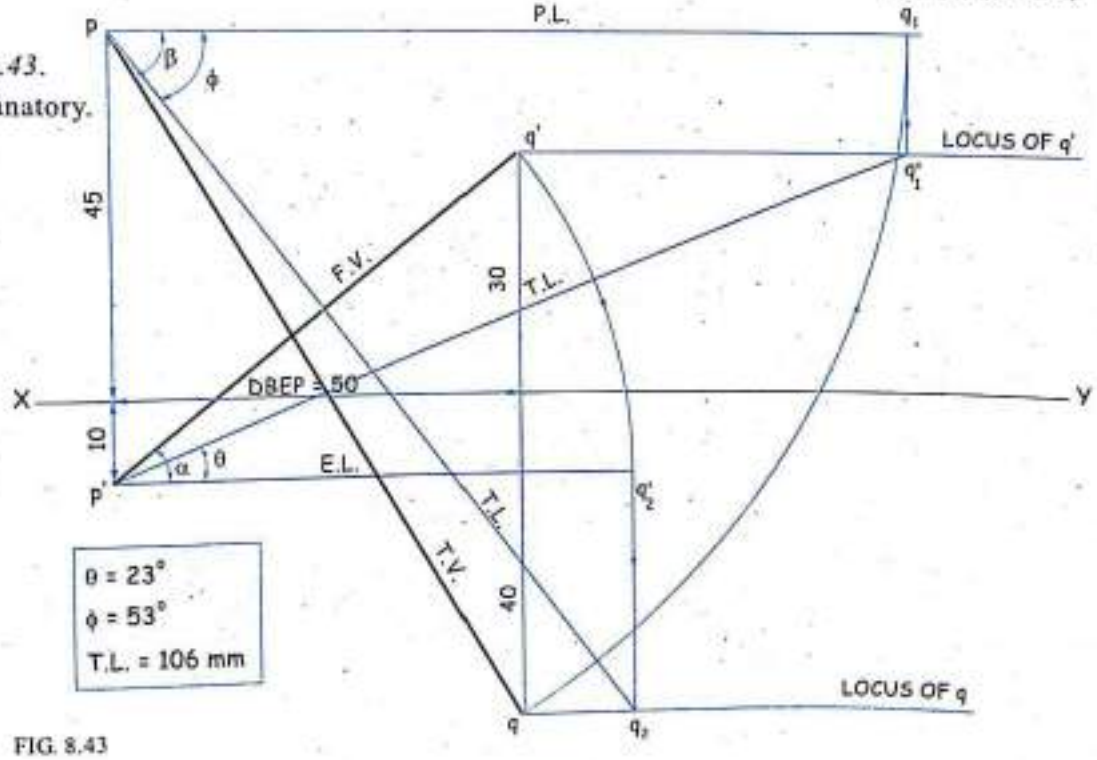

FIG. 8.43

Scanned by CamScanner

Problem 36

Elevation of line *AB* is 75 mm and is inclined to *XY* line at 45°. End *A* is 25 mm above H.P. and end *B* is 10 mm behind V.P. Draw its projections, length of line *AB* is 95 mm and end *B* is in third quadrant. Find the inclination of the line *AB* with H.P.

(Nov. '04, M.U.)

Solution

Refer figure 8.44.

It is self explanatory.

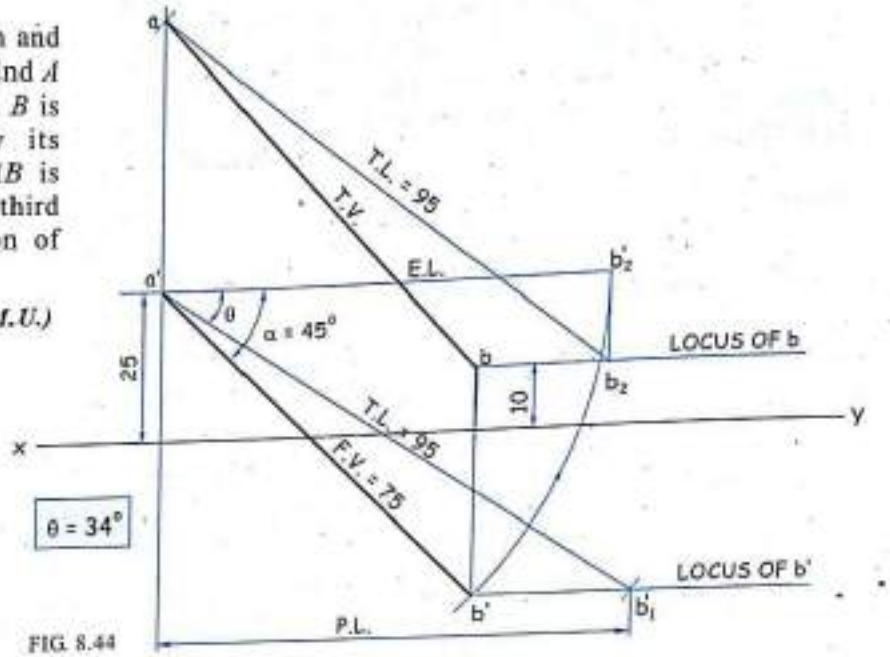

FIG. 8.44

Problem 37

The end projectors of a line *AB* are 55 mm apart. Point '*A*' is 55 mm below the H.P. and 60 mm behind the V.P. Point '*B*' is 30 mm above the H.P. and 25 mm infront of V.P. Draw the projections of *AB* and find it's true length and it's true inclination with H.P. and V.P. ***(June '05, M.U.)***

Solution

Refer figure 8.45.

It is self explanatory.

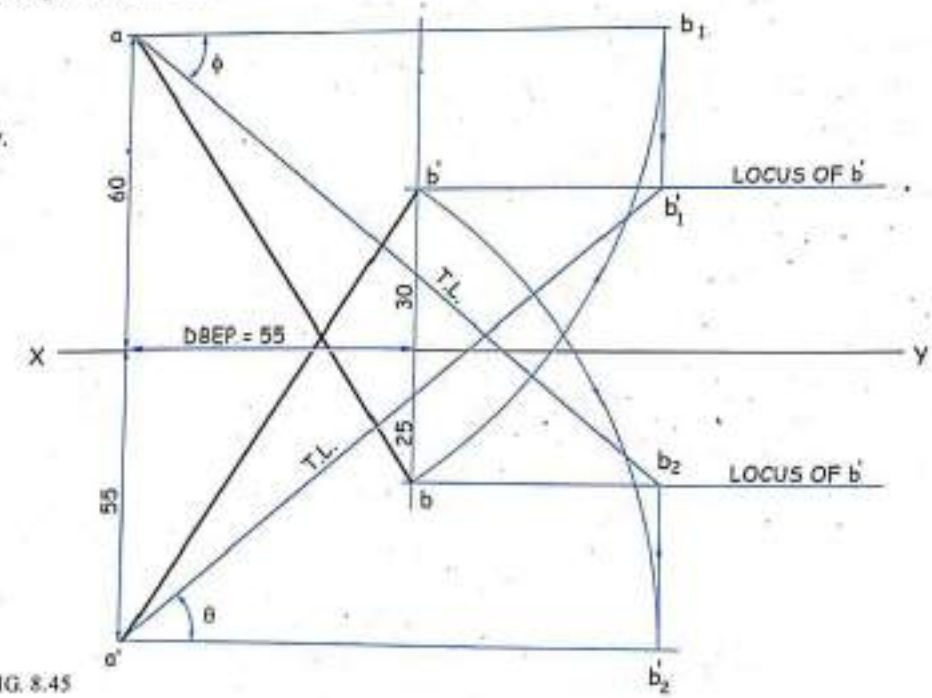

FIG. 8.45

Scanned by CamScanner

Problem 38

A line *AB* 100 mm long, makes an angle of 30° with H.P., 45° with V.P. It's one end *A* is 20 mm above H.P. and 30 mm in front of V.P. Draw F.V. and T.V. on the line and find it's inclination with *XY* line. *(Nov. '05, M.U.)*

Solution

Refer figure 8.46.

It is self explanatory.

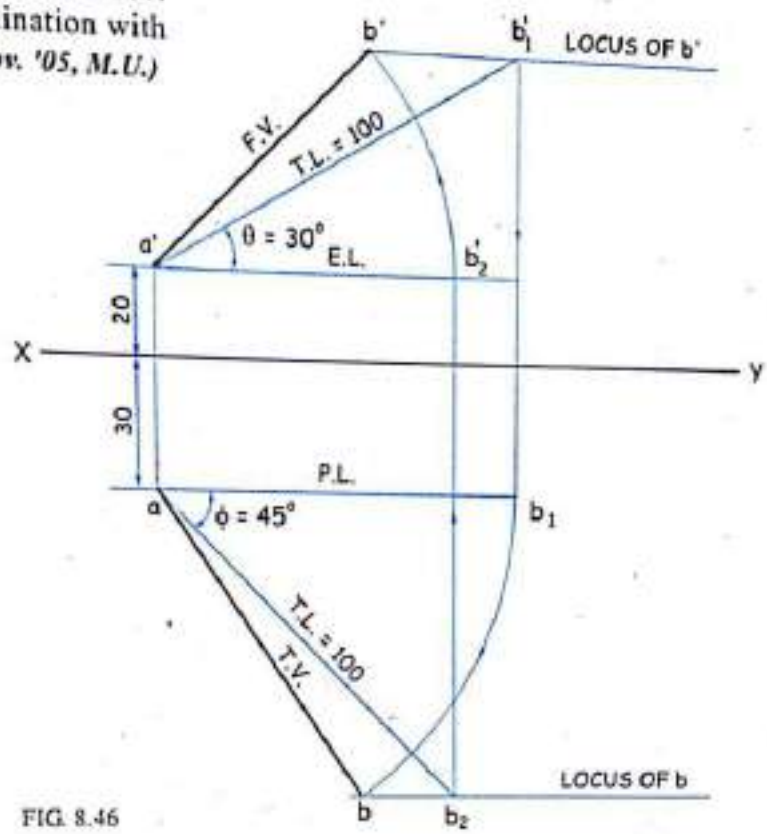

FIG. 8.46

Problem 39

A line *PQ*, 100 mm long is inclined at 40° to the H.P. and 30° to the V.P. Its end *P* is 30 mm above the H.P. and 40 mm in front of V.P. The end *Q* is in the third quadrant. Draw the projection of the line. *(June '06, M.U.)*

Solution

Refer figure 8.47.

It is self explanatory.

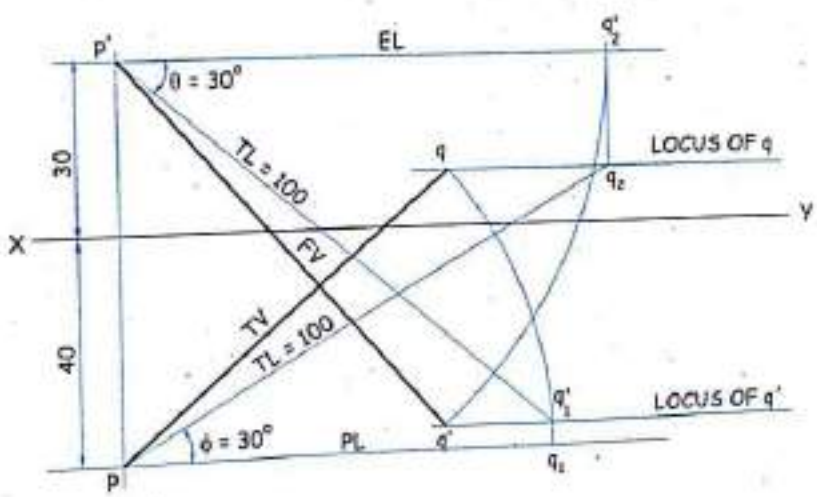

FIG. 8.47

Scanned by CamScanner

Problem 40

The line *RS* 100 mm long has its midpoint *M* 40 mm above H.P. and 35 mm in front of V.P. its F.V. measures 90 mm and its Top view measures 75 mm. The point *S* is in First quadrant. Draw its projections and find its True inclinations with H.P. and V.P. ***(Dec. '06, M.U.)***

Solution

Refer figure 8.48. It is self explanatory.

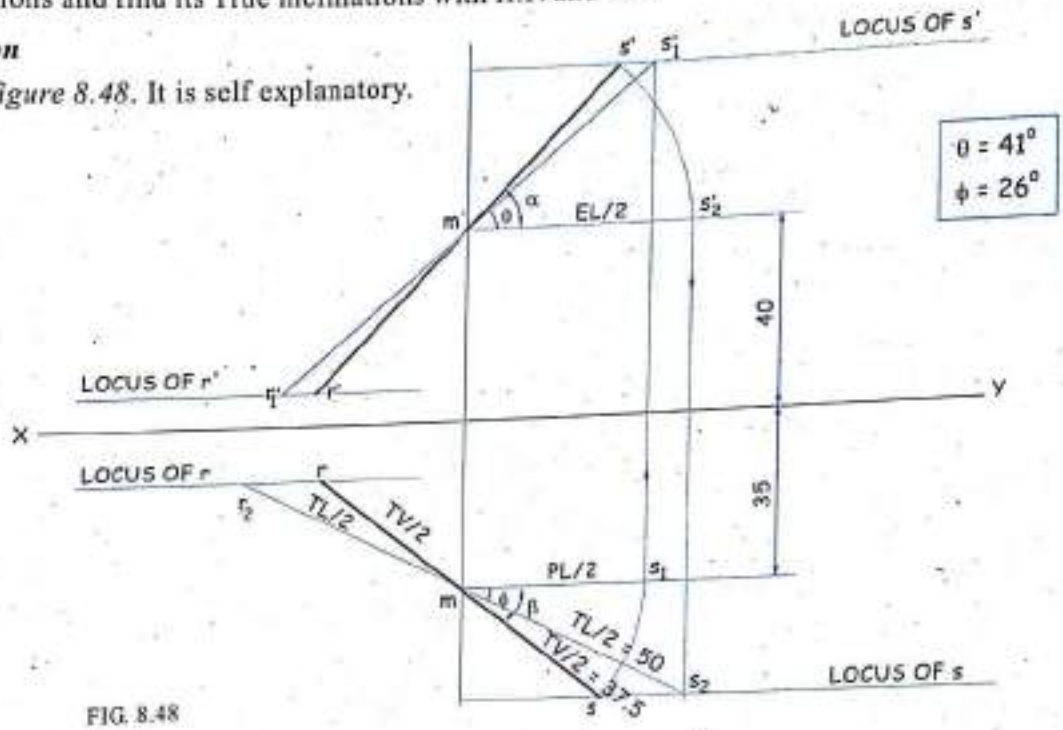

FIG. 8.48

Problem 41

The end *M* of line *MN* is 25 mm behind V.P. and 30 mm below H.P., the distance between end projectors of the line *MN* is 90 mm. The line is inclined at 30° to H.P. and 45 degree to V.P., draw its projection when *N* is in second quadrant, find true length and various angles. ***(June '07, M.U.)***

Solution

Refer figure 8.49. It is self explanatory.

Hint : *Assume any true length $m'x'_1$ and proceed in normal way*

T.L. = 183 mm
α = 45°
β = 30°

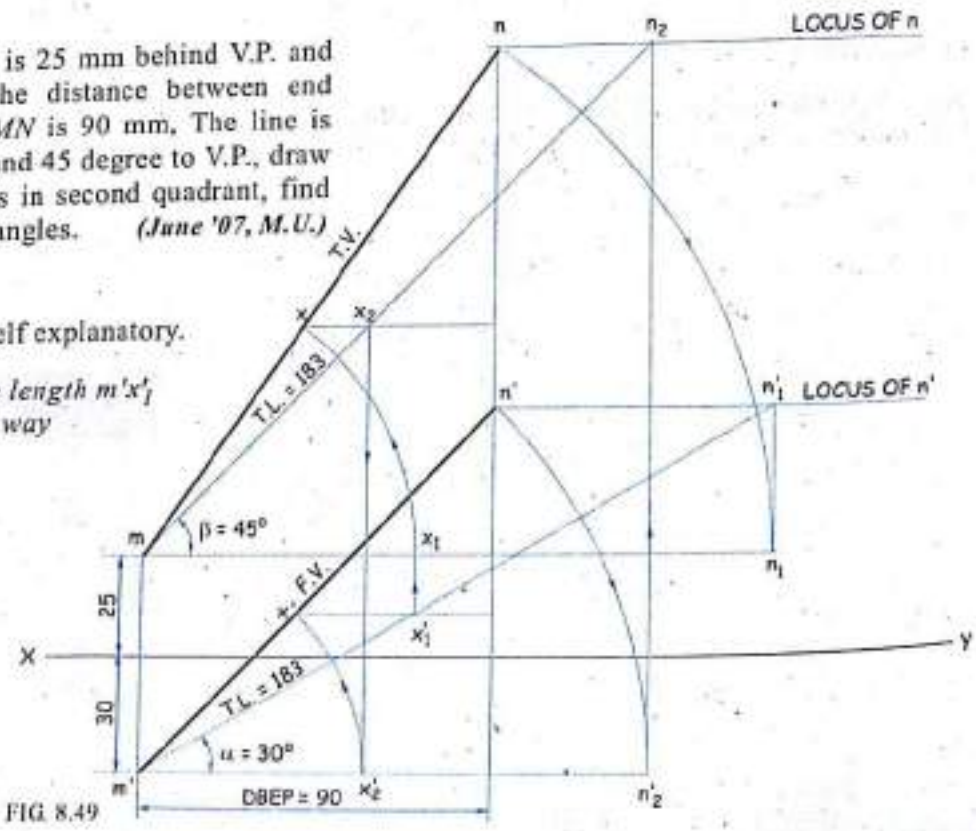

FIG. 8.49

Scanned by CamScanner

Problem 42

The end P of a line PQ, 120 mm long, is in the IInd quadrant and 20 mm from both the reference planes. End Q is in the IIIrd quadrant. The line is inclined at 30° with the H.P. and the distance between the end projectors measured parallel to XY line is 80 mm. Draw the projections.

(May '08, M.U.)

Solution

Refer figure 8.50. It is self explanatory.

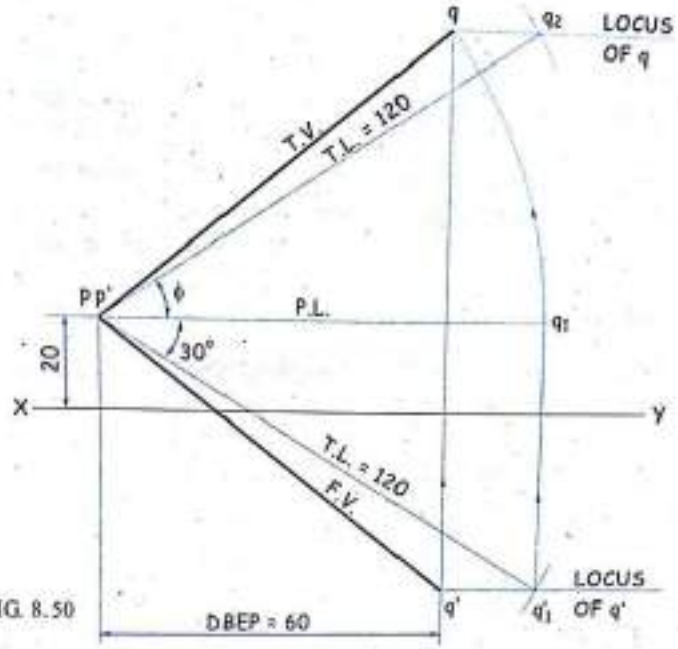

FIG. 8.50

Problem 43

A line AB 70 mm long, has its end A 10 mm above H.P. and 15 mm in front of V.P. its top view and front view measures 60 mm and 40 mm respectively. Draw the projections of the line and determine its inclinations with H.P. and V.P.

(Dec. '08, M.U.)

Solution

Refer figure 8.51. It is self explanatory.

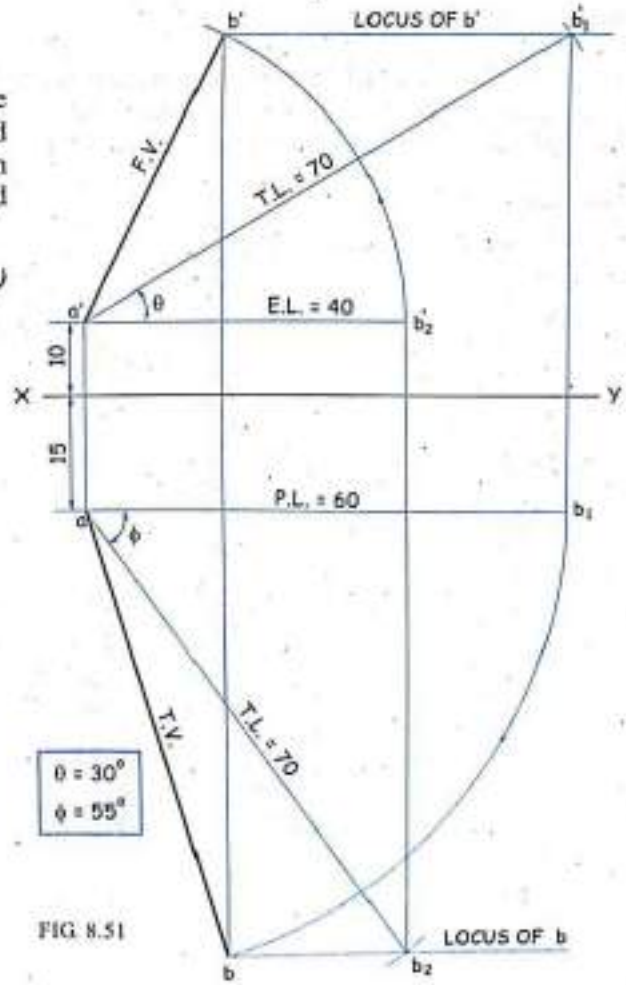

FIG. 8.51

Scanned by CamScanner

Problem 44

The T.V. of line *AB* measures 60 mm and is inclined at 56° to the *XY* line. Point *A* is 10 mm above the H.P. and 20 mm in front of the V.P. Point *B* is 45 mm above the H.P. and in front of the V.P. Draw the projections of line *AB*.

(May '09, M.U.)

Solution

Refer figure 8.52. It is self explanatory.

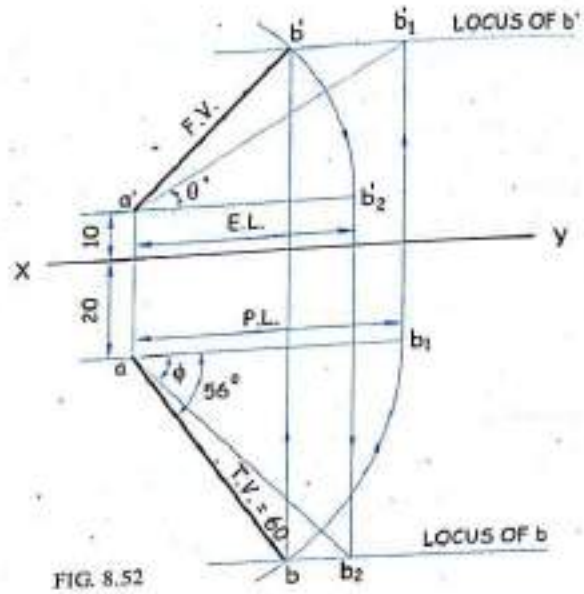

FIG. 8.52

Problem 45

Side view of a line *AB* 75 mm long, makes an angle of 40° with the *XY* line. Draw T.V. and F.V. of line when length of side view is 50 mm. Take point *A* to be 15 mm above the H.P. and 55 mm in front of the V.P. the point *B* being closest to V.P.

(Dec. '09, M.U.)

Solution

Refer figure 8.53. It is self explanatory.

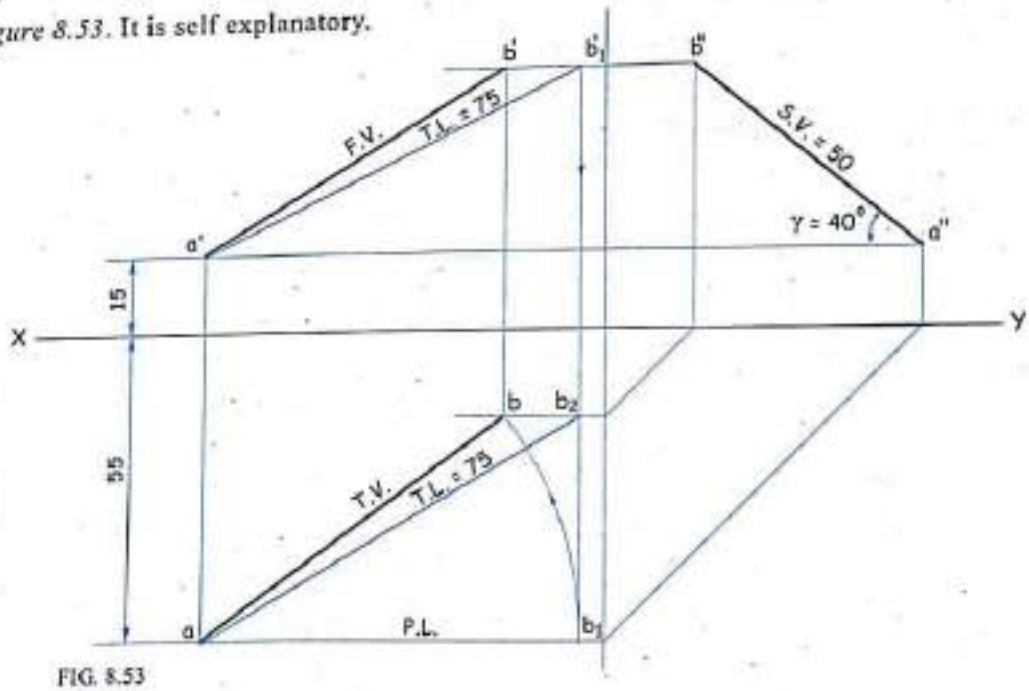

FIG. 8.53

Scanned by CamScanner

Problem 46

The top view of 100 mm long line *AB* measures 70 mm while the length of its F.V. is 85 mm. Its one end *A* is 15 mm above H.P. and 25 mm in front of V.P. The other end is in the third quadrant. Draw projections of the line and find it's inclination with H.P. and V.P. Also locate traces. ***(May '10, M.U.)***

Solution

Refer figure 8.54. It is self explanatory.

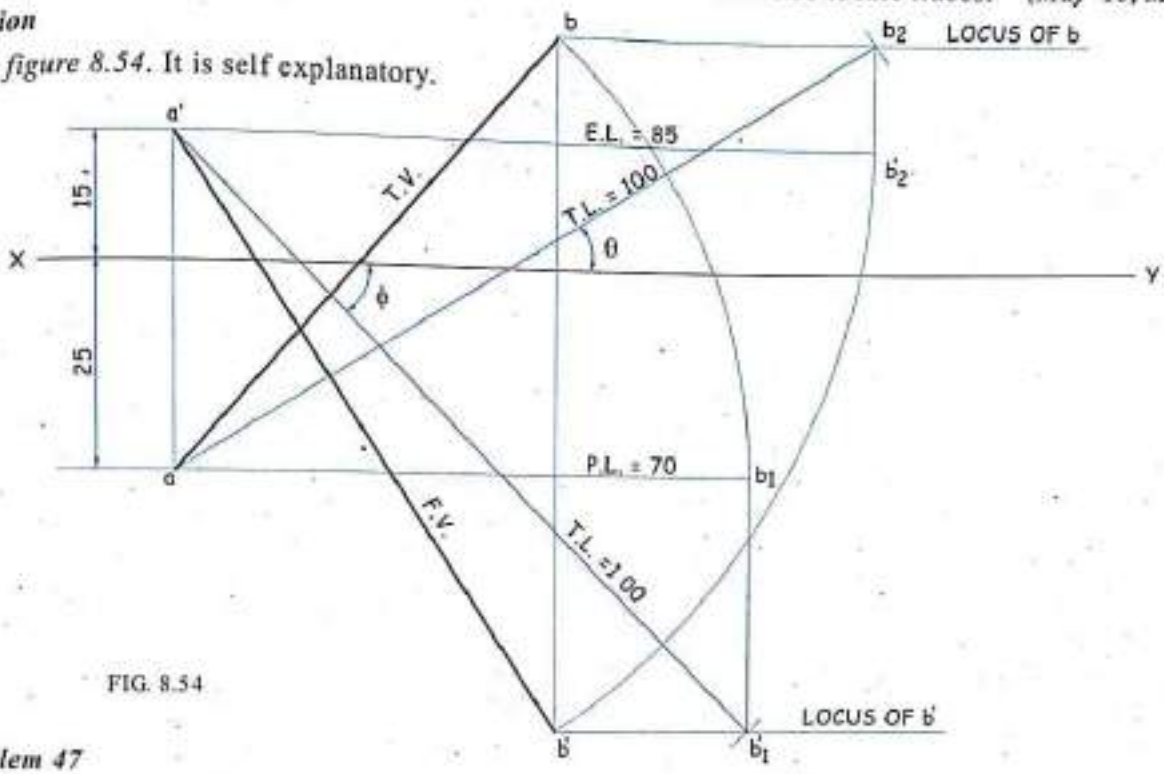

FIG. 8.54

Problem 47

The end *A* of straight line *AB* 90 mm long is in the second quadrant and 15 mm from both H.P. and V.P. End *B* is in the third quadrant. The line is inclined at 30° with the H.P. and the distance between the end projectors measured parallel to the *XY* line is 60 mm. Draw the projections of line, find its inclination with V. P. ***(Dec. '10, M.U.)***

Solution

Refer figure 8.55. It is self explanatory.

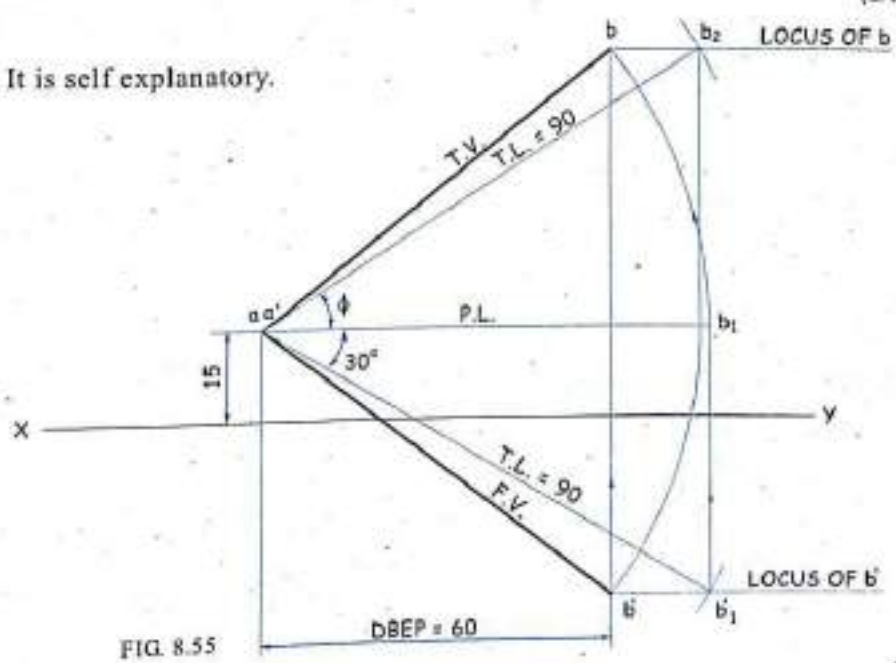

FIG. 8.55

Scanned by CamScanner

Problem 48

A line PQ 110 mm long has its plan and elevation lengths 80 mm and 90 mm long. One end of the line P is in H.P. and the other end Q in V.P. Assume the line in the 3rd quadrant. Draw the projections of the line and find its inclination with H.P. and V.P. Also locate its traces (H.T. and V.T.).

(May '11, M.U.)

Solution

Refer figure 8.56. It is self explanatory.

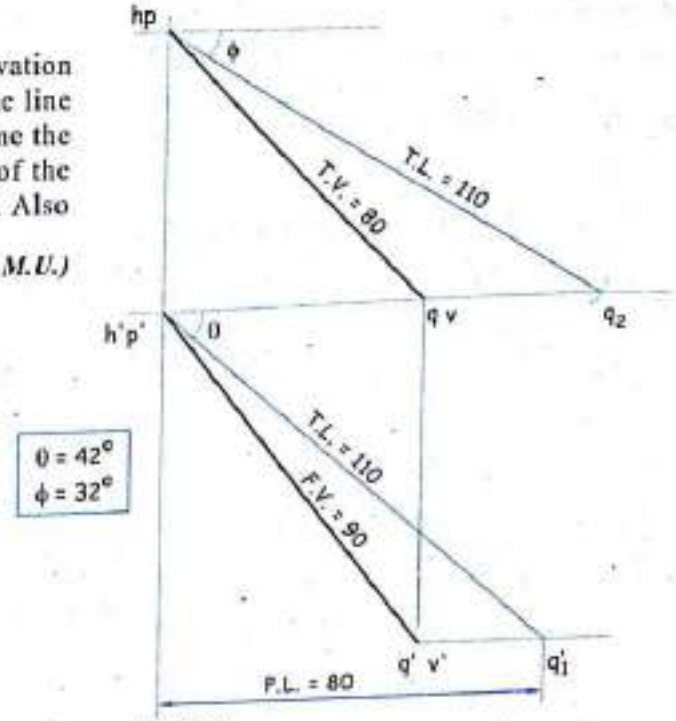

FIG. 8.56

Problem 49

A line AB, 100 mm long is inclined at an angle of 30° to H.P. and 45° to V.P. Its end point A is 10 mm above H.P. and 20 mm in front of VP. Draw the projections when point B is in the fourth quadrant.

(Dec. '11, M.U.)

Solution

Refer figure 8.57. It is self explanatory.

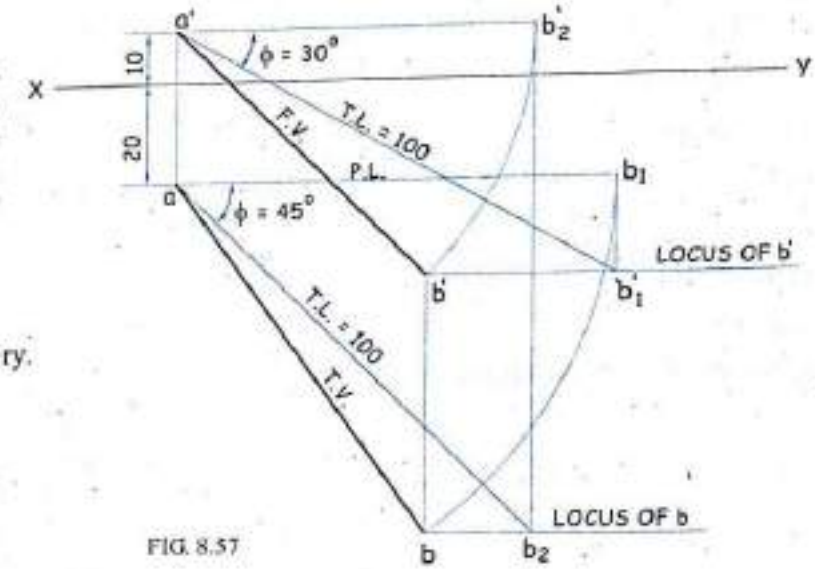

FIG. 8.57

8.5 Exercise

Line Parallel to Two Principal Planes and Perpendicular to Third

Draw the projections of line AB, 75 mm long in the following conditions.

1. Parallel to both, the H.P. and the V.P., 30 mm above the H.P. and 25 mm in front of the V.P.
2. Parallel to both, the H.P. and the V.P., 75 mm above the H.P. and 25 mm behind the V.P.
3. Parallel to both, the H.P. and the V.P., 30 mm below the H.P.
4. Parallel to both, the H.P. and the V.P., 25 mm from both the planes and in front of dihedral angle.

Scanned by CamScanner

5. Perpendicular to the H.P., end A 15 mm below the H.P., end B is in the 1st quadrant and line is 20 mm in front of the V.P.
6. Perpendicular to the H.P., end A 10 mm above the H.P., end B is 40 mm in front of the V.P.
7. Draw the projection of a line 75 mm long when it is perpendicular to the H.P. and parallel to the V.P. and 25 mm in front of the V.P. The end nearer to the H.P. is 15 mm above it and 25 mm in front of the P.P.
8. A line 60 mm long is perpendicular to the V.P. and parallel to the H.P. and 15 mm above it. The end nearer to the observer is 75 mm in front of the V.P. The line is 15 mm from the P.P. Draw its projections.

Line Inclined to Two Principal Planes

9. The plan length of line AB is 50 mm. The line is parallel to the V.P. and inclined at 45° to the H.P. Its end A is 20 mm above the H.P. and 30 mm in front of the V.P. Draw its projections and find its true length.
10. A line AB is 70 mm long and distance between the projectors through the ends of line AB is 50 mm. It is parallel to the V.P., its end A is 10 mm above the H.P. and 15 mm in front of the V.P. Draw its projections and determine its inclinations with the H.P.
11. The front view of line AB, 70 mm long measures 55 mm. Its end A is 15 mm above the H.P. and 20 mm in front of the V.P. Draw its projections if it is parallel to the H.P. and find its inclinations with the H.P.
12. The plan of a line measures 60 mm, and is parallel to the XY line. A line is inclined at 45° to the H.P. One end of the line is 25 mm above the H.P. and 20 mm in front of the V.P. Draw its projections and find the true length of a line.
13. The front view of a line is parallel to the XY line, 20 mm above it and 70 mm in length. The two ends of a line are 15 mm. and 50 mm in front of the V.P. respectively. What is its true length and inclinations with the V.P. ?
14. A line AB, 80 mm long has its end P, 15 mm above the H.P. and 20 mm in front of the V.P., end B is 50 mm above the H.P. and 25 mm in front of the V.P. Draw its projections and find its inclinations with the H.P.
15. A line 70 mm long is parallel to the V.P. and inclined at 45° to the H.P. The end nearer to the H.P. is 15 mm above the H.P., 25 mm in front of the V.P. and 20 mm from the left P.P. Draw the projections of a line on the H.P., the V.P. and left P.P.
16. The distance between the end projectors of a line AB, 75 mm long is 50 mm. The line is parallel to the H.P. The end P is 10 mm above the H.P. and 25 mm in front of the V.P. Draw three views and measure the inclinations with the V.P.
17. The T.V. of a line AB, 85 mm long measures 65 mm. The line is parallel to the V.P. The end A is 15 mm above the H.P. and 25 mm in front of the V.P. Draw three views and measure the inclinations with the H.P.
18. Draw the projections of a line 70 mm long when it is in the H.P. and inclined at 40° to the V.P. One end of a line is 105 mm in front of the V.P. and 15 mm in front of the left P.P.

Line Inclined to All Principal Planes

19. A line AB, 75 mm long is inclined to the H.P. at 40° and to the V.P. at 30°. End A is in the H.P. and 15 mm behind the V.P. Draw the projections of line AB.
20. A line PQ, 80 mm long is inclined to the V.P. at 45°. End P is 20 mm above the H.P. and in the V.P. and end Q is 55 mm above the H.P. Draw the projections and find the true inclinations of line with the H.P.
21. The F.V. of line CD is inclined at 40° to the XY. End C is 15 mm below the H.P. and 25 mm behind the V.P., whereas end D is 45 mm below the H.P. and 70 mm behind the V.P. Draw the projections of line CD and find its true inclinations with the V.P. and also find the true length.

Scanned by CamScanner

22. A line AB, 75 mm long has its end A in the V.P. and the end B in the H.P. The line is inclined at 30° to the H.P. and 60° at the V.P. Draw its projection and locate its traces.
23. The plan length and elevation length of line MN are 50 mm and 65 mm respectively. End M is in the H.P., 25 mm behind the V.P. End N is in the first dehedral angle. Top view is inclined at 50° to XY. Draw the projections and determine the inclinations of a line with the H.P. and the V.P. Also locate the traces.
24. End E of line EF is 10 mm above the H.P. and 15 mm in front of the V.P. End F is 40 mm above the H.P. and 55 mm in front of the V.P. The distance between the end projectors is 60 mm. Draw the projections and find the true length and the true inclination with the H.P. and the V.P.
25. The distance between the end projectors of line RS is 50 mm and end R is 20 mm above the H.P. and 10 mm in front of the V.P., the line is inclined at 45° to the H.P. and its T.V. measures 70 mm. Draw the projections of a line and determine its inclinations with the V.P., also locate the traces.
26. A line AB, 80 mm long has its end A in both the H.P. and the V.P., and inclined at 30° to the H.P. and 45° to the V.P. Draw its projection and locate its traces.
27. Length of the F.V. and T.V. of line PQ, 70 mm long measures 60 mm and 50 mm respectively. End P is 10 mm in front of the V.P. and 20 mm above the H.P. Draw the projections and find its inclinations with the H.P. and the V.P.
28. Line PQ, 100 mm long is inclined at 45° to the V.P. and its T.V. measures 70 mm. End P is in the H.P. and 30 mm in front of the V.P., whereas end Q is in the IInd quadrant. Draw the projections and determine the inclinations with the H.P. Locate traces.
29. End R of line RS is in the H.P. and 20 mm behind the V.P. End S is in the V.P. and 55 mm above the H.P., the distance between the end projectors is 60 mm. Draw the projections and find its true length, true inclinations and traces.
30. The end A of line AB is in the H.P.and 25 mm in front of the V.P. The end B is in the V.P. and 50 mm above the H.P. The distance between the end projectors when measured parallel to the line of intersection of the H.P. and the V.P. is 65 mm. Draw the projections of line AB and determine its true length and its true inclinations with the H.P. and the V.P. Mark the traces.
31. End projectors of line AB, 90 mm long are 50 mm apart. End A is 45 mm above the H.P. and in the V.P. End B is in the H.P. and in front of the V.P. Draw the projections and determine the inclinations with the H.P. and the V.P. also locate the traces.
32. The T.V. of 75 mm long line AB measures 60 mm. Point A is 50 mm in front of the V.P. and 15 mm below the H.P. Point B is 15 mm in front of the V.P. and is above the H.P. Draw the projections of line AB and find its inclinations with the H.P. and V.P. Measure its traces.
33. The T.V. of 75 mm long line AB measures 50 mm. The mid-point of a line is 50 mm from the V.P. and 75 mm from the H.P. The point B is 30 mm from the V.P. Draw its projections and determine its inclinations with the H.P. and the V.P.
34. The mid-point of line PQ, 100 mm long is 15 mm above the H.P. and 20 mm in front of the V.P. The F.V. measures 60 mm and the T.V. measures 70 mm. Draw the projections and determine the inclinations with the H.P. and the V.P. if end P is in the Ist quadrant.
35. The mid-point of line PQ, 80 mm long is 10 mm above the H.P. and 20 mm behind the V.P. The elevation length and plan length of line PQ are 50 mm and 60 mm respectively. Draw the projections and find its inclinations with the H.P. and the V.P. if end Q is in the IIIrd quadrant.
36. The plan length of line AB, 75 mm long measures 50 mm. The end A is 50 mm in front of the V.P.and 15 mm above the H.P. The end B 15 mm in front of the V.P. and above the H.P. Draw the projections of line AB and determine its inclinations with the H.P. and the V.P.

Scanned by CamScanner

9 PROJECTIONS OF PLANES

9.1 Introduction

In geometry, a plane is defined as lamina *with negligible thickness having dimensions in length and breadth.*

Any geometrical shape of thin lamina can be considered as geometrical plane, e.g. triangle, square, rectangle, rhombus, pentagon, hexagon, circle, semi-circle etc., which we are going to discuss in this chapter.

9.2 Traces of Plane

Similar to the traces of lines, the planes also have traces. A plane, extended if required, will meet the principal planes as a intersection in the form of lines. These intersection lines are known as *traces of plane.*

(i) **Horizontal Trace (H.T.) :** The intersection of a plane with the horizontal plane (H.P.) in the form of a line is known as *Horizontal Trace (H.T.).*

(ii) **Vertical Trace (V.T.) :** The intersection of a plane with the vertical plane (V.P.) in the form of a line is known as *Vertical Trace (V.T.).*

(iii) **Profile Trace (P.T.) :** The intersection of a plane with the profile plane (P.P.) in the form of a line is known as *Profile Trace (P.T.).*

Scanned by CamScanner

9.3 Surface of Plane Parallel to One Principal Plane and Perpendicular to Other Two

9.3.1 Surface of Plane Parallel to H.P. and Perpendicular to V.P. and P.P.

Problem 1

A rectangular plane *ABCD* having length 50 mm and breadth 30 mm is parallel to the H.P. and perpendicular to the V.P. and the P.P. If the plane is 10 mm above the H.P. and one of the longer side (say *AD*) is 20 mm in front of the V.P., draw its projection.

Solution

Refer figure 9.1 (a) and (b).

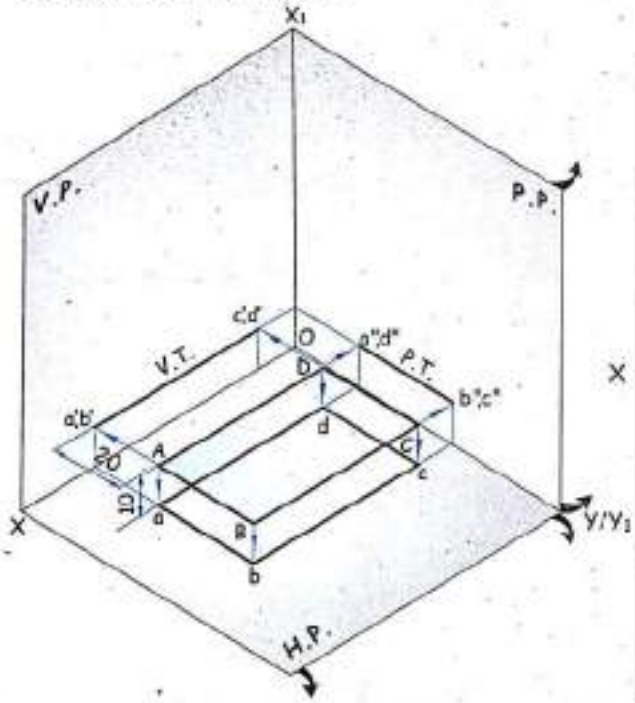

FIG. 9.1 (a)

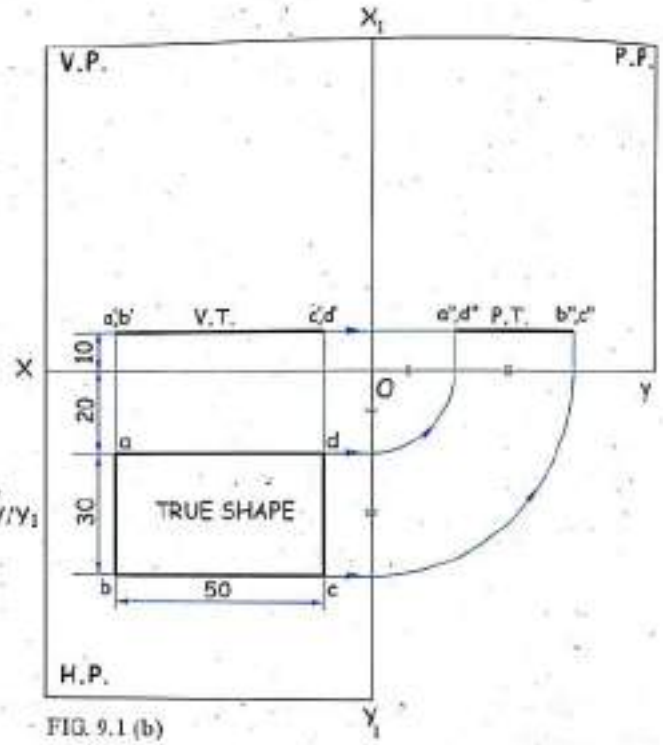

FIG. 9.1 (b)

1. The required position of a plane *ABCD* is shown in *figure 9.1 (a)* with its projections, i.e. front view (F.V.) *a'b'c'd'*, top view (T.V.) *abcd* and side view (S.V.) *a"b"c"d"*.
2. Unfolding the principal planes, we get the projections of a plane as shown in *figure 9.1 (b)*.
3. To draw the projections of a plane, *refer figure 9.1 (b)*.
   (i) As plane is parallel to the H.P., its T.V. *abcd* gives the true shape in the H.P.
   (ii) Draw the T.V. (*abcd*) 50 × 30 with side *ad* = 50 mm, parallel and 20 mm below *XY* line.
   (iii) As the plane is perpendicular to the V.P., its F.V. (*a'b'c'd'*) is shown as a line view.
   (iv) Projecting the points of T.V. vertically up, draw the F.V. (*a'b'c'd'*) as a line view 10 mm above and parallel to *XY* line.
4. To project the side view,
   (i) Draw X_1Y_1 line perpendicular to *XY* line.
   (ii) Through F.V. (*a'b'c'd'*), draw the horizontal line parallel to *XY* line.
   (iii) Through T.V. (*abcd*), draw the line parallel to *XY* line to meet X_1Y_1 line.

Scanned by CamScanner

(iv) Taking intersections of XY and X_1Y_1 line as a centre, i.e. O.

(v) Draw an arc to meet XY and draw a vertical projector to intersect the horizontal line drawn through ($a'b'c'd'$) to obtain the S.V. ($a''b''c''d''$).

9. To find the traces

(i) Since the plane is parallel to the H.P., it will not have H.T.

(ii) Since the plane is perpendicular to the V.P., its F.V. ($a'b'c'd'$) will be V.T.,

(iii) Since the plane is perpendicular to the P.P., its S.V. ($a''b''c''d''$) will be P.T.,

Conclusion

When a plane is parallel to the H.P. and perpendicular to the V.P. and P.P.

1. Start with T.V. as it shows true shape of a plane.
2. Its F.V. is a line view (V.T.) and is parallel to XY line.
3. Its S.V. is a line view (P.T.) and is parallel to XY line.

9.3.2 Surface of Plane Parallel to V.P. and Perpendicular to H.P. and P.P.

Problem 2

A rectangular plane $ABCD$ having length 50 mm and breadth 30 mm is parallel to the V.P. and perpendicular to the H.P. and the P.P. If the plane is 20 mm in front of the V.P. and one of the longer side (say BC) is 10 mm above the H.P., draw the projection of a plane.

Solution

Refer figure 9.2 (a) and (b).

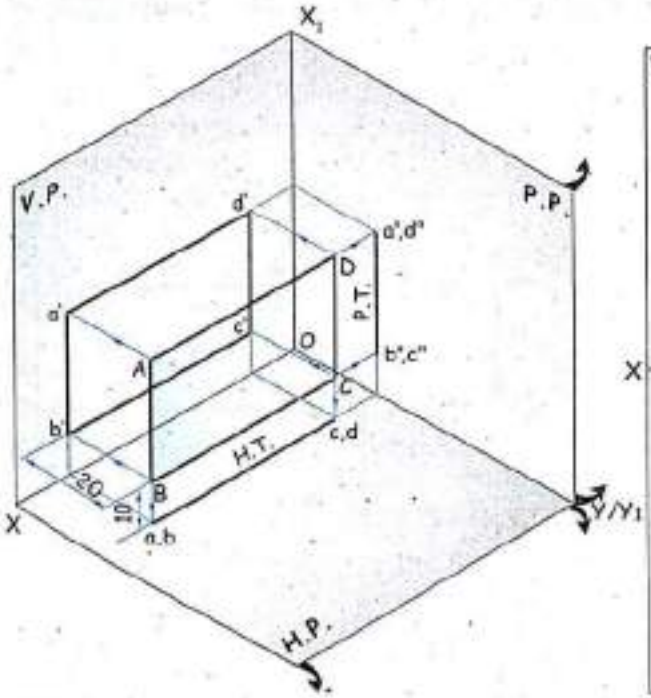

FIG. 9.2 (a)

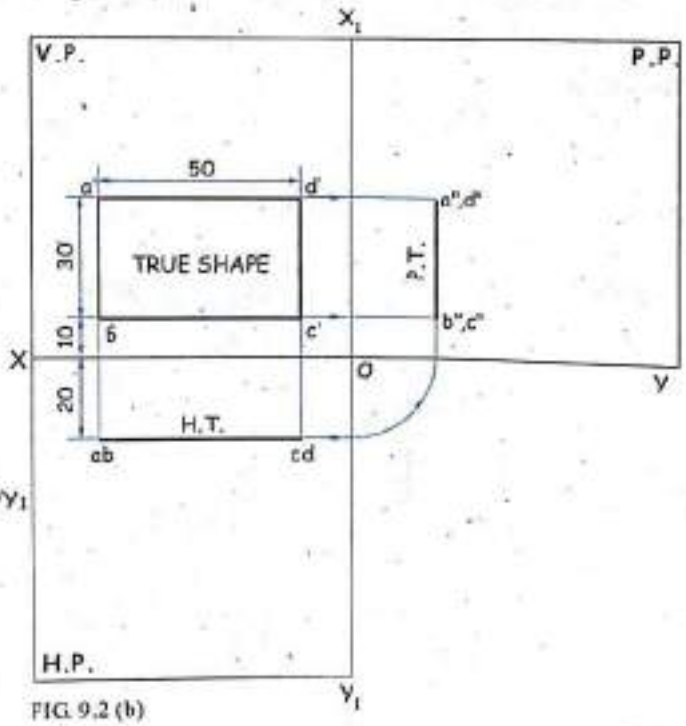

FIG. 9.2 (b)

1. The required position of a plane $ABCD$ is shown in *figure 9.2 (a)* with its projections, i.e. F.V. ($a'b'c'd'$), T.V. ($abcd$) and S.V. ($a''b''c''d''$).

Scanned by CamScanner

2. Unfolding the principal planes, we get the projections of a plane as shown in *figure 9.2 (b)*.
3. To draw the projections of a plane, *refer figure 9.2 (b)*.
   (i) As the plane is parallel to the V.P., its F.V. (*a'b'c'd'*) gives true shape in the V.P.
   (ii) Draw the F.V. (*a'b'c'd'*) 50 × 30 with side *bc* = 50 mm, parallel and 10 mm above *XY* line.
   (iii) As the plane is perpendicular to the H.P., its T.V. (*abcd*) is shown by a line view.
   (iv) Projecting the points of F.V. vertically down, draw the T.V. (*abcd*) as a line view 20 mm below *XY* line.
   (v) Projecting F.V. and T.V., we can draw the S.V.(*a"b"c"d"*) by usual method as shown in *figure 9.2(b)*.
   (vi) Since the plane is parallel to the V.P., it will not have V.T. Its T.V. will be H.T. and S.V. will be P.T. of a plane.

Conclusion

When a plane is parallel to the V.P. and perpendicular to the H.P. and P.P.

1. Start with F.V. as it shows true shape of a plane.
2. Its T.V. is a line view (H.T.) and is parallel to *XY* line.
3. Its S.V. is a line view (P.T.) and is perpendicular to *XY* line.

9.3.3 Surface of Plane Parallel to P.P. and Perpendicular to H.P. and V.P.

Problem 3

A rectangular plane *ABCD* having length 50 mm and breadth 30 mm is parallel to the P.P. and perpendicular to the H.P. and the V.P., If side *BC* is 10 mm above H.P. and side *AB* 20 mm in front of the V.P., draw the projections of a plane.

Solution

Refer figure 9.3 (a) and (b).

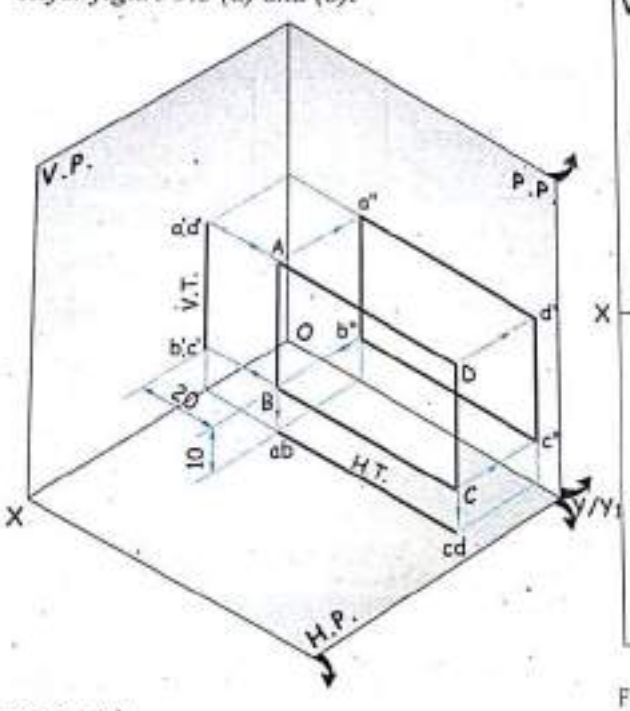

FIG. 9.3 (a)

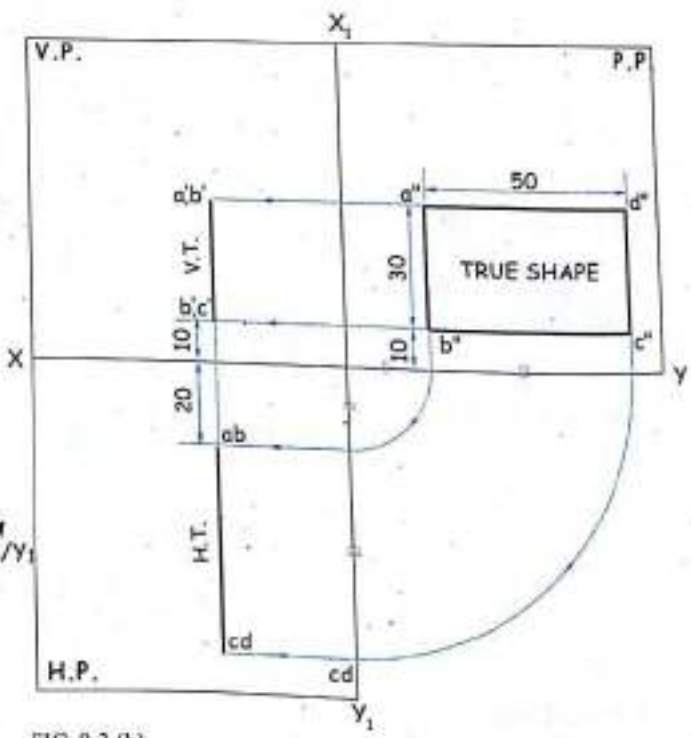

FIG. 9.3 (b)

Scanned by CamScanner

1. The required position of a plane *ABCD* is shown in *figure 9.3 (a)* with its projections, i.e. F.V. (*a'b'c'd'*), T.V. (*abcd*) and S.V. (*a"b"c"d"*).
2. Unfolding the principal planes, we get the projections of a plane as shown in *figure 9.3 (b)*.
3. To draw the projections of a plane, *refer figure 9.3 (b)*.
   (i) As the plane is parallel to the P.P., its S.V. (*a"b"c"d"*) gives true shape in the P.P.
   (ii) Draw the S.V. (*a"b"c"d"*) 50 × 30 with side *b"c"* = 50 mm, parallel and 10 mm above *XY* line.
   (iii) Draw X_1Y_1 line perpendicular to *XY* line.
   (iv) As the plane is perpendicular to the V.P., its F.V. (*a'b'c'd'*) is shown as a line view.
   (v) Project the points of S.V. horizontally parallel to *XY* line, draw the F.V. (*a'b'c'd'*) as a line view perpendicular to *XY* line.
   (vi) From F.V. and S.V., construct the T.V. (*abcd*) by usual method as shown in *figure 9.3 (b)*. T.V. of a plane is also represented as a line view, because the plane is perpendicular to H.P.

Conclusion

When a plane is parallel to the P.P. and perpendicular to the H.P. and V.P.

1. Start with S.V. as it shows true shape of a plane.
2. Its T.V. is a line view (H.T.) and is perpendicular to *XY* line.
3. Its F.V. is a line view (V.T.) and is perpendicular to *XY* line.

9.4 Surface of Plane Perpendicular to One Principal Plane and Inclined to Other Two

9.4.1 Surface of Plane Inclined to H.P. at an Angle θ_s and Perpendicular to V.P.

Problem 4

A rectangular plane *ABCD* having length 50 mm and breadth 30 mm has its surface inclined to the H.P. at an angle $45^0(\theta_s)$ and perpendicular to the V.P. such that the shorter side *AB* of a rectangular plane is 10 mm above the H.P. and longer side *AD* of a rectangular plane is 20 mm in front of the V.P. Draw its projections.

Solution

Refer figure 9.4 (a) and (b).

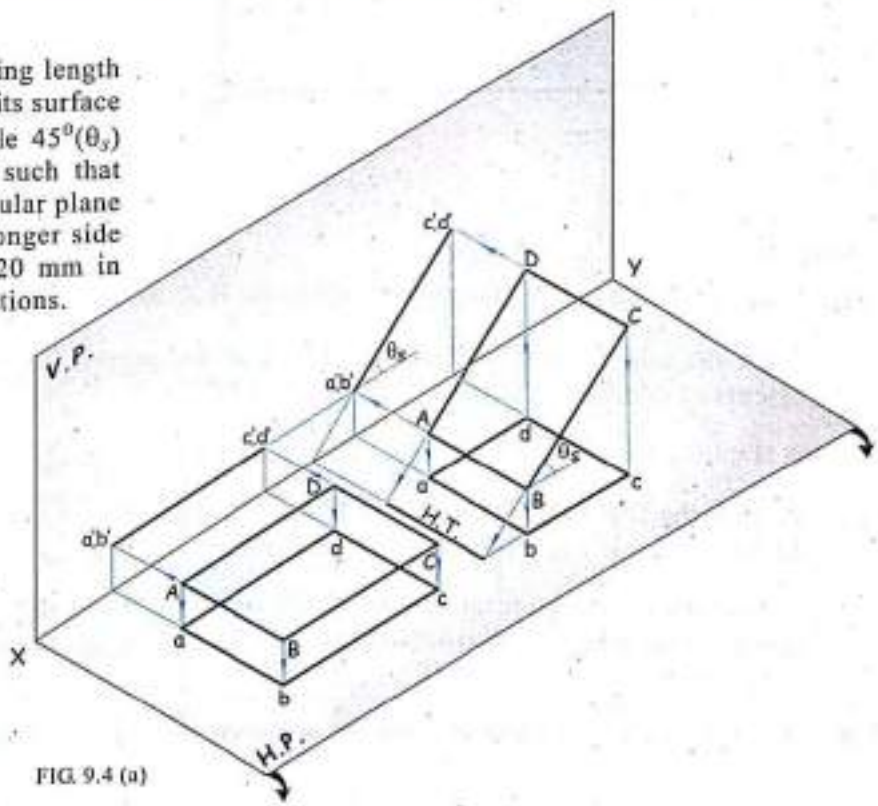

FIG. 9.4 (a)

Scanned by CamScanner

Notation Used

True inclination of surface of a plane with the H.P. $\Rightarrow \theta_s$.

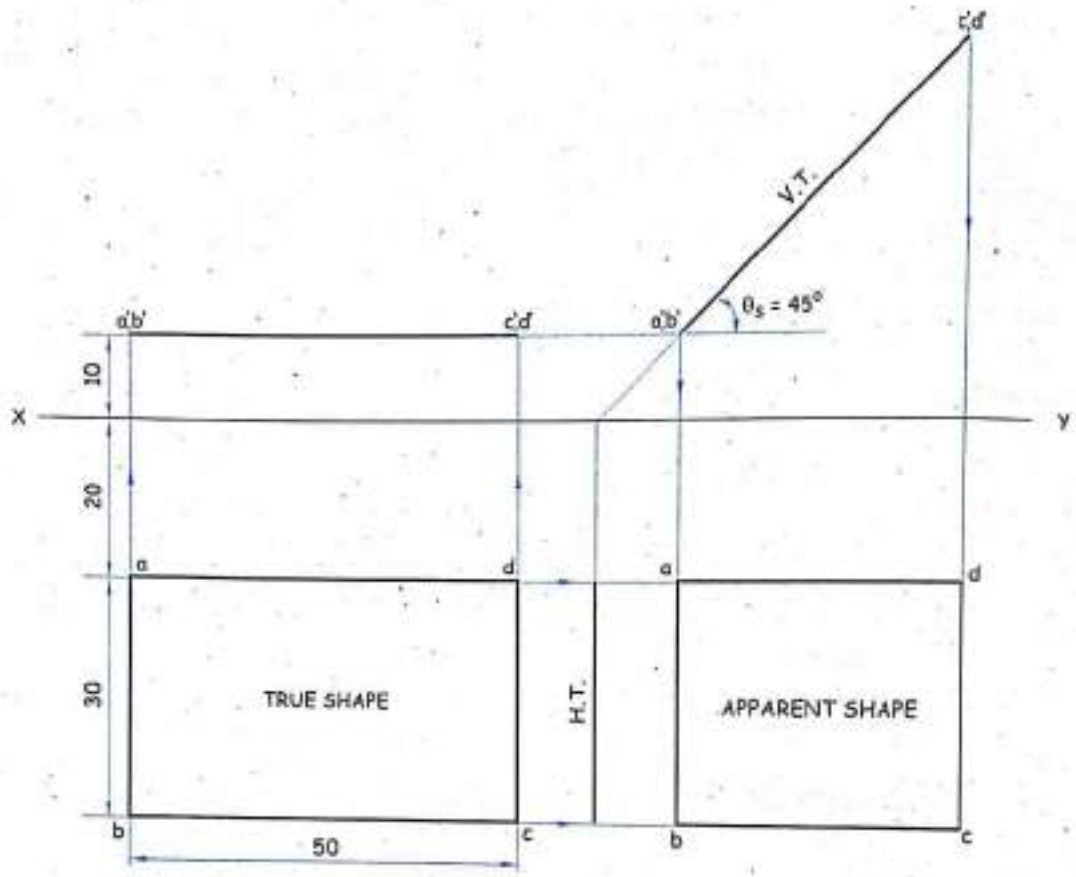

FIG. 9.4 (b)

Stage I

1. When the surface of a plane is inclined to the H.P., assume the plane is parallel to the H.P.
2. Draw the true shape of a plane in T.V. (*abcd*) and project its F.V. (*a'b'c'd'*) as a line view (as discussed in problem 1).

Stage II

3. Redraw the F.V. (*a'b'c'd'*) of a plane, which represents as a line view at an angle $\theta_s = 45°$ with *XY* line.
4. Project the points from the F.V. (*a'b'c'd'*) vertically down and project the points from the T.V. (*abcd*) of the Ist stage horizontally towards the right to get the corresponding points of the T.V. in II nd stage.
5. Join these points in a proper sequence and draw the required final T.V.

Scanned by CamScanner

9.4.2 Surface of Plane Inclined to H.P. at an Angle θ_s Which Shows Apparent Shape as a Required Shape and Plane Perpendicular to V.P. with One of the Side of a Plane Resting in H.P.

Problem 5

A rectangular plane *ABCD*, 50 mm × 30 mm size has the surface of a plane perpendicular to the V.P. and inclined to the H.P. by such an angle so that its plan becomes a square. Draw the projection of a plane if the shorter side of a plane is in the H.P.

Solution

Refer figure 9.5 (a) and (b).

Stage I

1. When the surface of a plane is inclined to the H.P. and one of its edge is resting in the H.P., assume that the complete plane to be resting in the H.P. such that the edge of a plane which is in the H.P. is perpendicular to *XY* line (say *ab*).

2. Draw the true shape of a plane in the T.V. (*abcd*) and project its F.V. (*a'b'c'd'*). As assumed that the complete plane is in the H.P. the F.V. of the plane is represented as a line view coinciding with *XY* line.

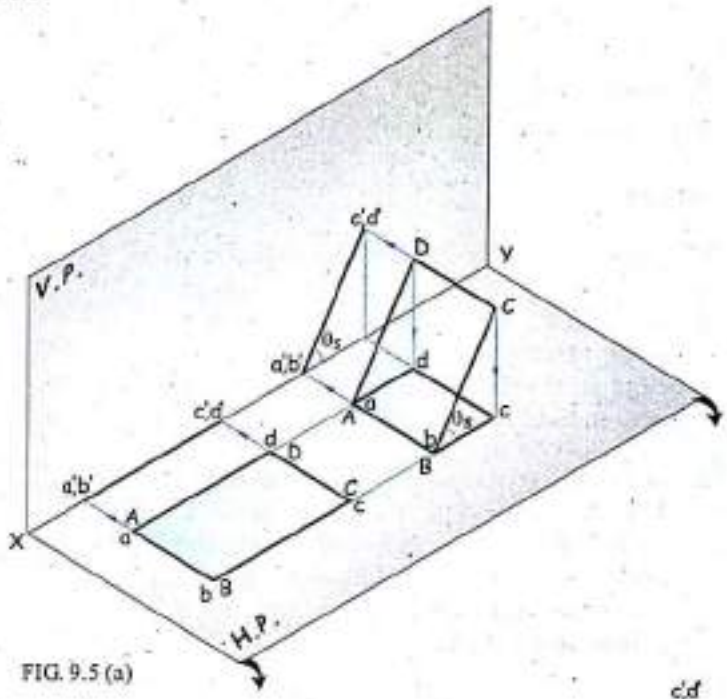

FIG. 9.5 (a)

Stage II

3. As the plan of the IInd stage is appearing to be a square, draw the plan *abcd* as a square of 30 mm size.

4. Draw two projectors, one through *ab* and second through *cd* vertically upwards, mark *a'b'* on *XY* line.

5. With centre *a'b'* and radius equal to 50 mm (i.e. length of line view in F.V.), cut an arc to the second projector drawn through *cd* and mark *c'd'* at the intersection.

6. Join *a'b'* to *c'd'* which represents the F.V. of a plane *ABCD* making an angle θ_s with the H.P. (measure the value of θ_s.)

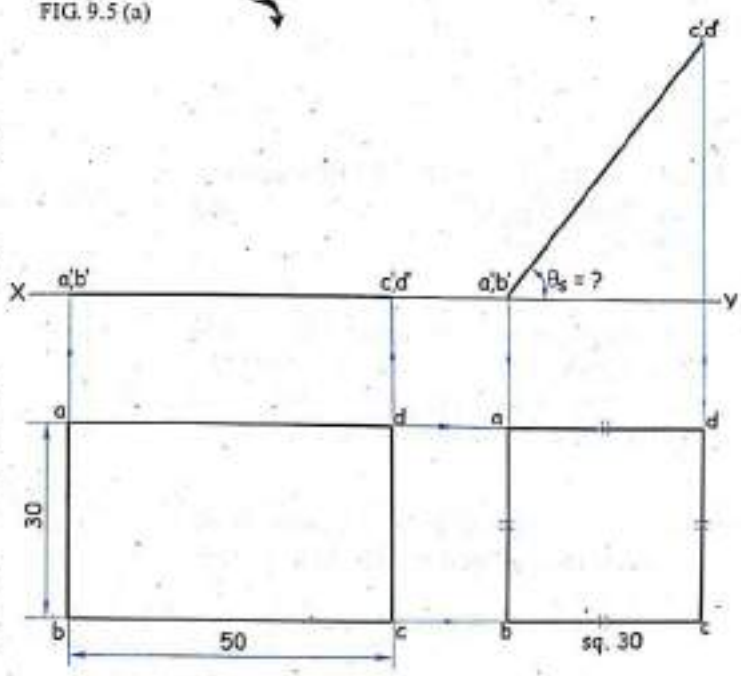

FIG. 9.5 (b)

Scanned by CamScanner

9.4.3 Surface of Plane Inclined to H.P. at an Angle θ_s and Perpendicular to V.P. with One of a Edge of a Plane Resting in H.P.

Problem 6

A square plane *ABCD* with sides 40 mm has its surface inclined to the H.P. at an angle 45° (θ_s) and perpendicular to the V.P. such that one of a side of a square plane is in the H.P. Draw its projections.

Solution

Refer figure 9.6 (a) and (b).

Stage I

1. When the surface of a plane is inclined to the H.P. and one of its edge is resting in the H.P., assume the complete plane to be resting in the H.P. such that the edge of a plane which is in the H.P. is perpendicular to *XY* line (say *ab*).
2. Draw the true shape of a plane in the T.V. (*abcd*) and project its F.V. (*a'b'c'd'*). As assumed that the complete plane is in H.P., the F.V. of a plane is represented as a line view coinciding with *XY* line.

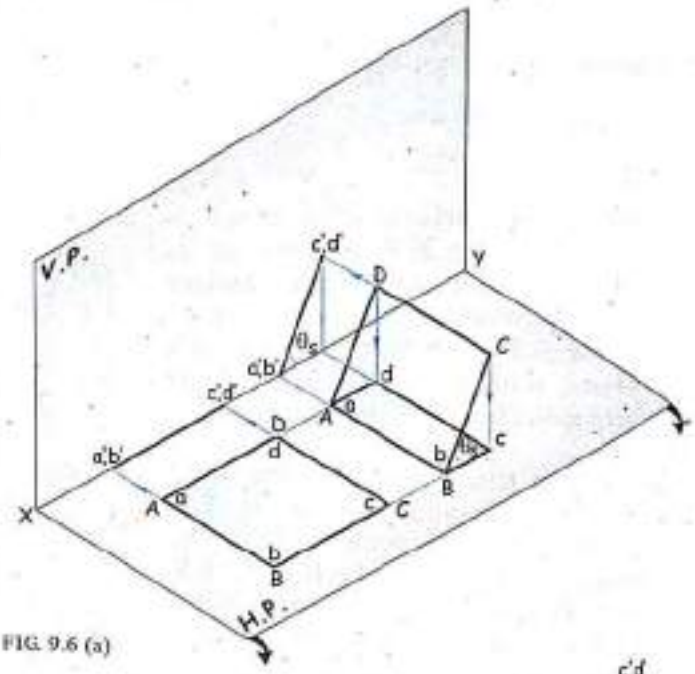

FIG. 9.6 (a)

Stage II

3. Redraw the F.V. (*a'b'c'd'*) of stage I at an angle θ_s = 45° with *XY* line having *a'b'* on *XY* line.
4. Project the points from the F.V. vertically down and project the points from the T.V. (*abcd*) of stage I[st] horizontally right to get the corresponding points of the T.V. in IInd stage.
5. Draw the required final T.V. (*abcd*) by joining the located points in a proper sequence.

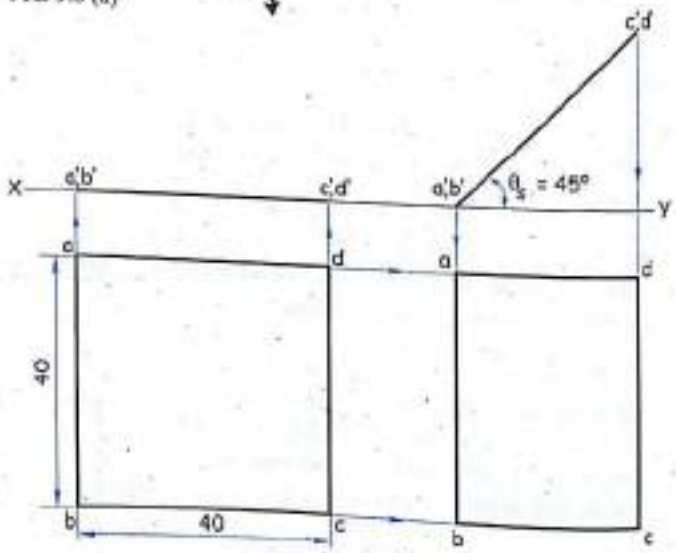

FIG. 9.6 (b)

Scanned by CamScanner

9.4.4 Surface of Plane Inclined to H.P. at an Angle θ_s and Perpendicular to V.P. with One of the Corner of a Plane Resting in H.P.

Problem 7

A square plane *ABCD* with sides 40 mm has its surface inclined to the H.P. at an angle 45° (θ_s) and perpendicular to the V.P. such that one of a corner of a square plane is in the H.P. Draw its projections.

Solution

Refer figure 9.7 (a) and (b).

Stage I

1. When the surface of a plane is inclined to the H.P. and one of its corner is resting in the H.P., assume the complete plane to be resting in the H.P. such that the centre of a plane and the corner on which it is resting should pass through a line parallel to *XY* line.

2. Draw the true shape of a plane in the T.V. (*abcd*) and project its F.V. (*a'b'c'd'*). Here the F.V. of a plane is represented as a line view coinciding with *XY* line.

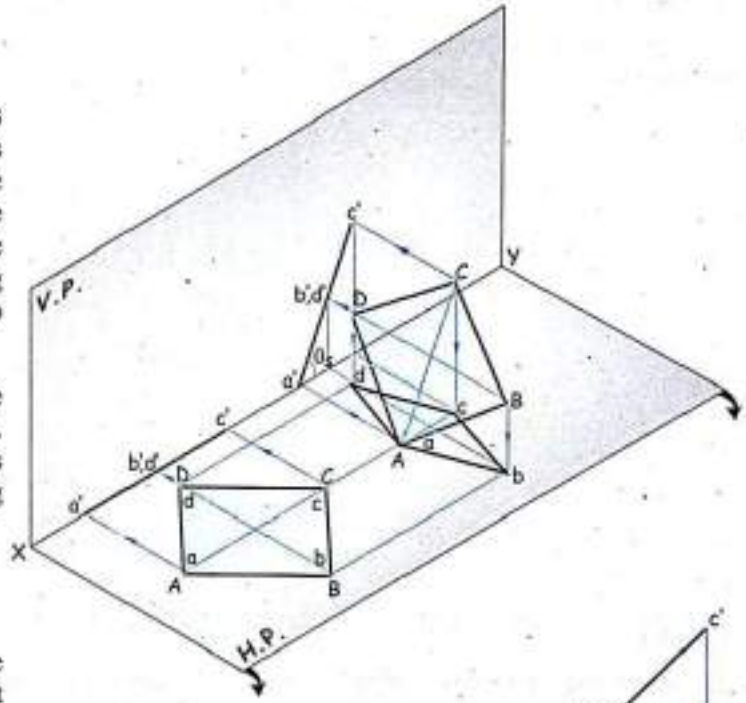

FIG.9.7.(a)

Stage II

3. Redraw the F.V. (*a'b'c'd'*) of a plane which is represented as a line view at an angle $\theta_s = 45°$ with *XY* line.

4. Project the points from the F.V. (*a'b'c'd'*) vertically down and project the points from the T.V. (*abcd*) of the 1st stage horizontally right to get the corresponding points of the T.V. in IInd stage.

5. Draw the required final T.V. (*abcd*) by joining the located points in a proper sequence.

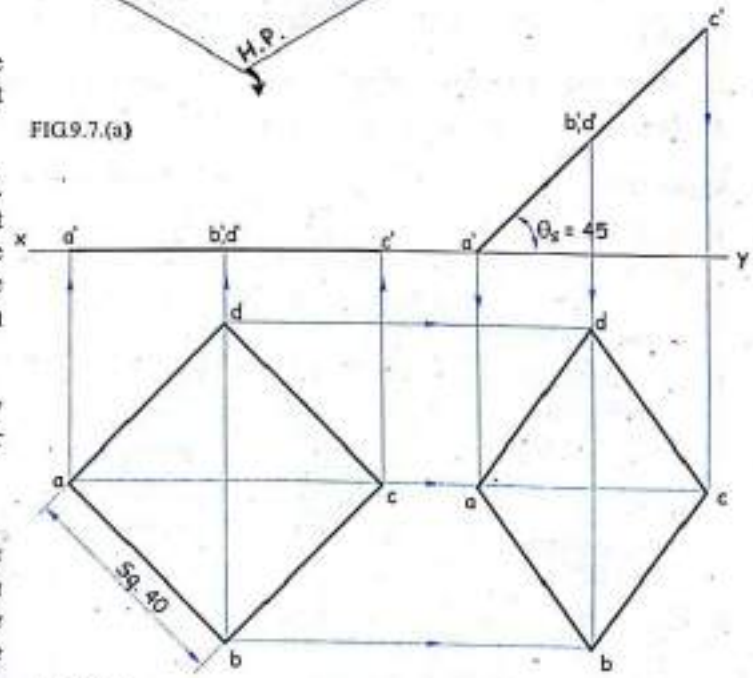

FIG.9.7.(b)

Note : *If the plane rests on one of its corner in the H.P., then the edges of a plane containing a corner which is in the H.P. makes equal inclination with the H.P.*

Scanned by CamScanner

9.4.5 Surface of Plane Inclined to V.P. at an Angle ϕ_s and Perpendicular to H.P.

Problem 8

A rectangular plane *ABCD* with length 50 mm and breadth 30 mm has its surface inclined to the V.P. at an angle 45° (ϕ_s) and perpendicular to the H.P. such that the longer side *BC* is 10 mm above the H.P. and shorter side *AB* is 20 mm in front of the V.P. Draw its projections.

Solution

Refer figure 9.8 (a) and (b).

Notation Used

True inclination of surface of a Plane with the V.P. $\Rightarrow \phi_s$.

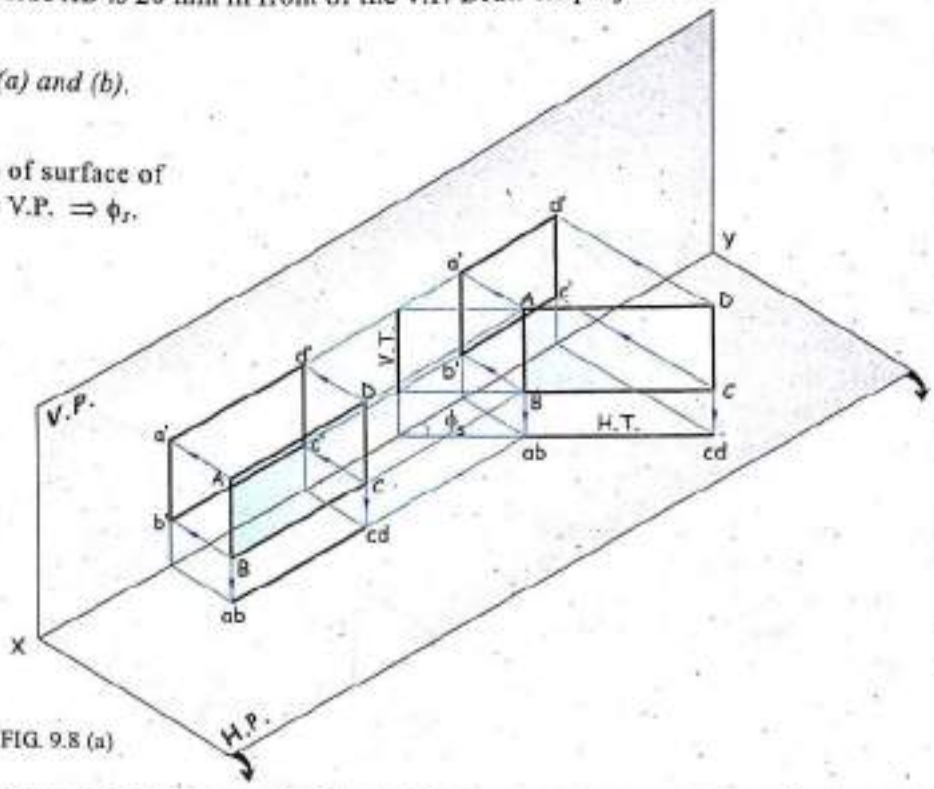

FIG. 9.8 (a)

Stage I

1. When the surface of a plane is inclined to the V.P., assume that the plane is parallel to V.P.
2. Draw the true shape of a plane in the F.V. (*a'b'c'd'*) and project its T.V. (*abcd*) by usual method.

Stage II

3. Redraw the T.V. (*abcd*) of a plane, which is represented as a line view at an angle $\phi_s = 45°$ with *XY* line.
4. Project the points from the T.V. (*abcd*) vertically up and project the points from the F.V. (*a'b'c'd'*) of the, Ist stage horizontally towards the right to get the corresponding points of the F.V. in the IInd stage.
5. Draw the required final F.V. (*a'b'c'd'*) by joining these located points in a proper sequence.

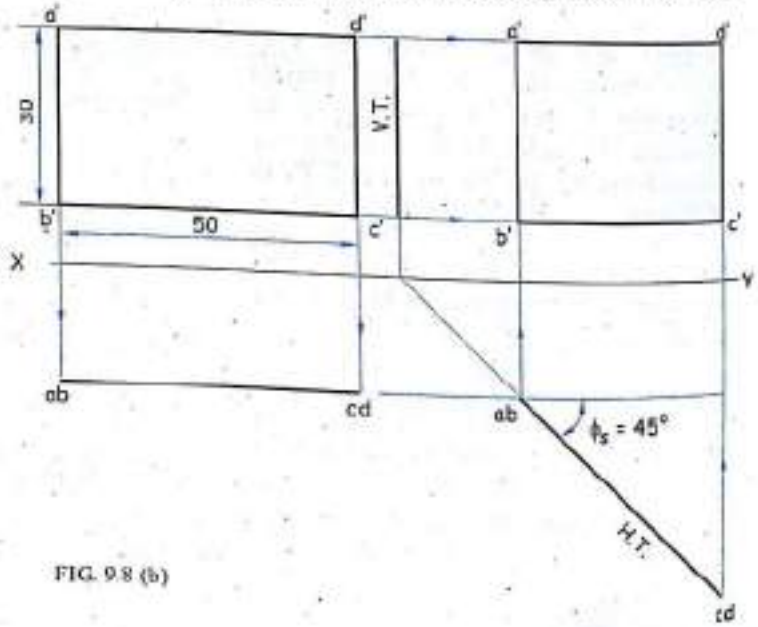

FIG. 9.8 (b)

Scanned by CamScanner

9.4.6 Surface of Plane Inclined to V.P. at an Angle ϕ_x and Perpendicular to H.P. with One of the Edge of a Plane Resting in V.P.

Problem 9

A square plane *ABCD* with side 40 mm has its surface inclined to the V.P. at angle 45° (ϕ_x) and perpendicular to H.P. such that one of the side of square plane is in the V.P. Draw its projections.

Solution

Refer figure 9.9 (a) and (b).

Stage I

1. When the surface of a plane is inclined to the V.P. and one of its edge is resting in the V.P. assume the complete plane to be resting in the V.P. such that the edge of plane which is in the V.P. is perpendicular to *XY* line (say *a'b'*).
2. Draw the true shape of the plane in F.V. (*a'b'c'd'*) and project its T.V. (*abcd*). Here T.V. of the plane is represented as a line view which is coinciding with the *XY* line.

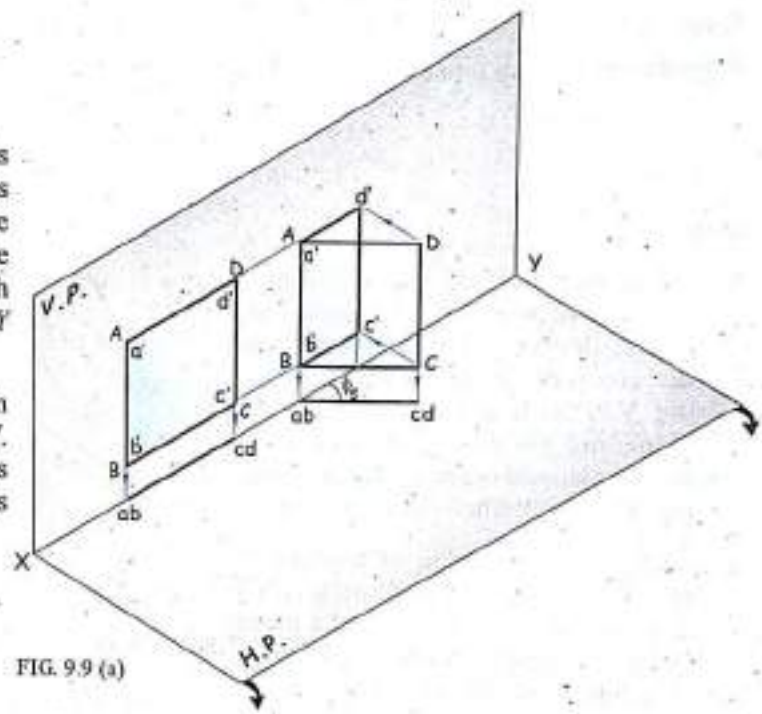

FIG. 9.9 (a)

Stage II

3. Redraw the T.V. (*abcd*) of a plane, which is represented as a line view at an angle $\phi_x = 45°$ with *XY* line.
4. Project the points from the T.V. (*abcd*) vertically up and project the points from the F.V. (*a'b'c'd'*) of the Ist stage horizontally towards the right to get the corresponding points of the F.V. and draw the required final projection.

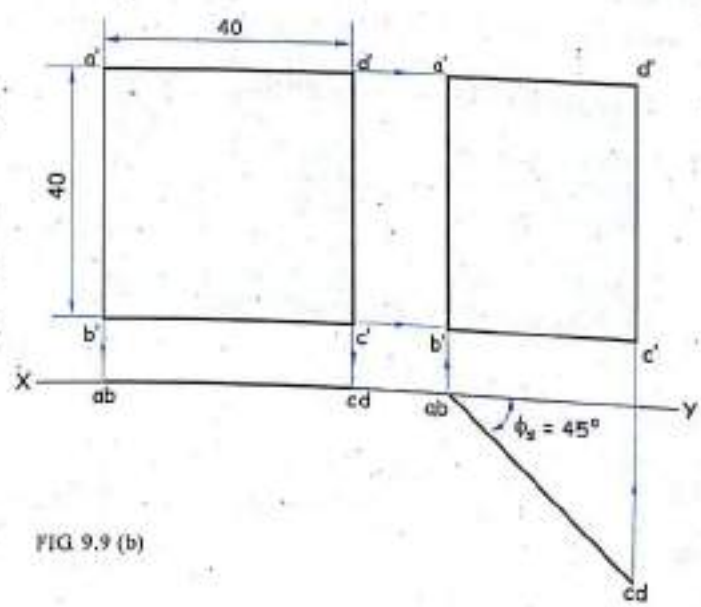

FIG. 9.9 (b)

Scanned by CamScanner

9.4.7 Surface of Plane Inclined to V.P. at an Angle ϕ_s and Perpendicular to H.P. with One of the Corner of a Plane Resting in V.P.

Problem 10

A square plane *ABCD* having side 40 mm has its surface inclined to the V.P. at an angle 45° (ϕ_s) and perpendicular to the H.P. such that one of the corner of a square plane is in the V.P. Draw its projections.

Solution

Refer figure 9.10 (a) and (b).

Stage I

1. When the surface of a plane is inclined to the V.P. and one of its corner is resting in the V.P. Assume the complete plane to be resting in the V.P. such that the centre of a plane and the corner on which it is resting should pass through a line parallel to *XY* line.
2. Draw the true shape of a plane in the F.V. (*a'b'c'd'*) and project its T.V. (*abcd*). Here the T.V. of a plane is represented as a line view which coincides with the *XY* line.

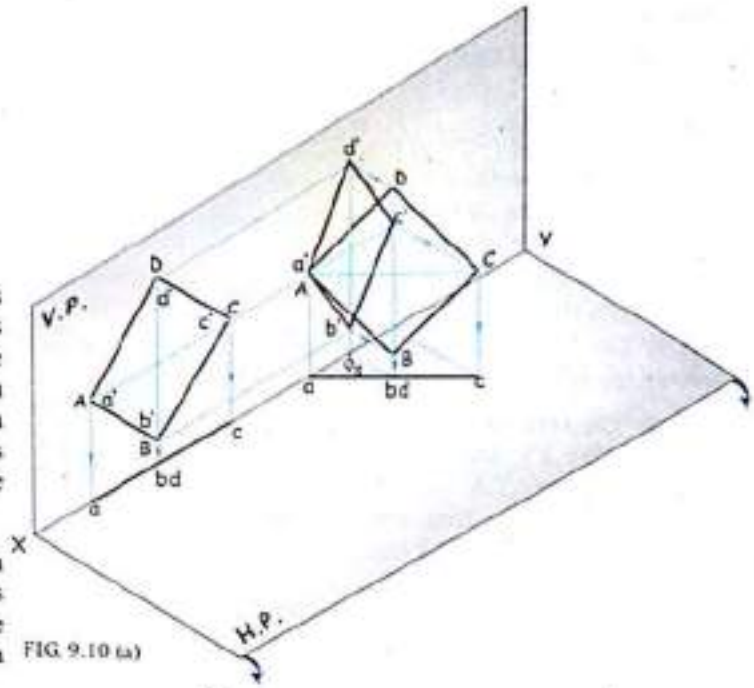

FIG. 9.10 (a)

Stage II

3. Redraw the T.V. (*abcd*) of a plane, which is represented as a line view at an angle $\phi_s = 45°$ with the *XY* line.
4. Project the points from the T.V. (*abcd*) vertically up and project the points from the F.V. (*a'b'c'd'*) of the Ist stage horizontally towards the right to get corresponding points of the F.V. and draw the required final projection.

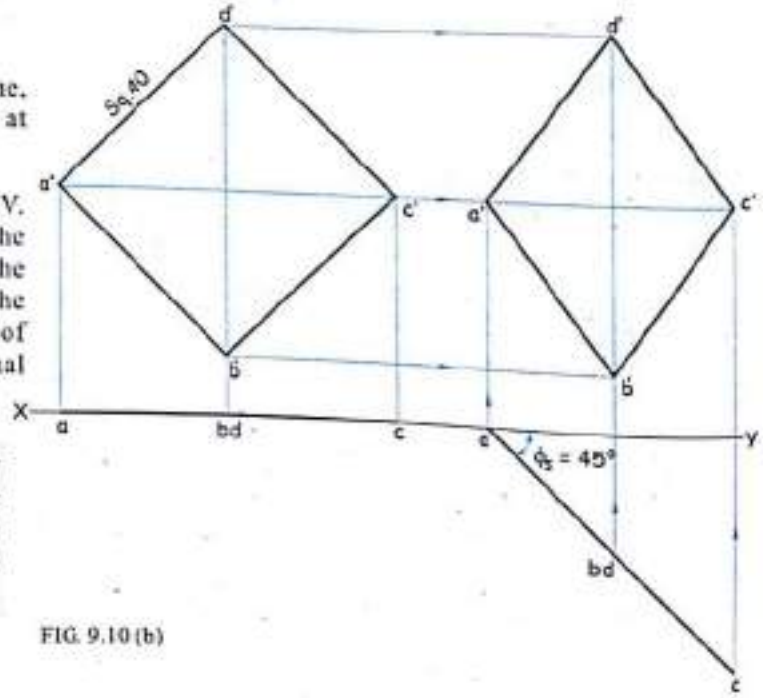

FIG. 9.10 (b)

Note : *If the plane rests on one of its corner in the V.P. then the edges of a plane containing a corner which is in the V.P. makes equal inclinations with the V.P.*

Scanned by CamScanner

Conclusion

(A) When the surface of a plane is inclined to the H.P. at an angle θ_s and perpendicular to the V.P., projection of a plane is obtained in two stages.

Stage I

Depending upon the resting condition's (side/corner), assume the plane to be on the H.P. and hence start with the T.V. as a true shape of a plane and project the F.V. of a plane as a line view coinciding with *XY* line.

Stage II

Redraw the F.V. as per given resting condition so that the F.V. (line view) of a plane is inclined to the H.P. and perpendicular to the V.P. and then project the T.V.

Note

1. *F.V. of a plane is a line view (V.T.) and it shows inclination with XY line.* (i.e.θ_s.)
2. *T.V. of a plane shows apperent shape.*

(B) When the surface of a plane is inclined to the V.P. at an angle ϕ_s and perpendicular to the H.P., projection of a plane is obtained in two stages.

Stage I

Depending upon the resting condition's (side/corner), assume the plane to be on the V.P. and hence start with the F.V. as a true shape of a plane and project the T.V. of the plane as a line view coinciding with the *XY* line.

Stage II

Redraw the T.V. as per given resting condition so that the T.V. (line view) of a plane is inclined to the V.P. and perpendicular to the H.P. and then project the F.V.

Note

1. *T.V. of a plane is a line view (H.T.) and it shows inclination with the XY line. (i.e. ϕ_s)*
2. *F.V. of a plane shows apparent shape.*

Notation Used

Description	Notation
True inclination of surface of a Plane with the H.P.	θ_s
True inclination of surface of a Plane with the V.P.	ϕ_s
True inclination of edge/diagonal/diameter of a Plane with the H.P.	θ_e/θ_d
True inclination of edge/diagonal/diameter of a Plane with the V.P.	ϕ_e/ϕ_d
Apparent inclination of F.V. edge/diagonal/diameter of Plane with the XY.	α_e/α_d
Apparent inclination of T.V. edge/diagonal/diameter of Plane with the XY.	β_e/β_d

TABLE 9.1

Scanned by CamScanner

Selection of Initial Position and Sequence of Roatation

Plane Resting on the Side in the H.P.

Stage I : When the plane is resting on the side in the H.P., assume the plane to be on the H.P. such that resting side should be perpendicular to the XY line and draw the T.V. as a true shape of plane and then project the F.V. as a line view coinciding with the XY line.

Stage II : Redraw the F.V. so that the plane is inclined to the H.P. (θ_s) and then project the T.V. (apparent shape).

Plane Resting on the Corner in the H.P.

Stage I : When the plane is resting on the corner in the H.P., assume the plane to be on the H.P. such that line joining the resting corner and centre of plane should be parallel to the XY line and draw the T.V. as a true shape of plane and then project the F.V. as a line view coinciding with the XY line.

Stage II : Redraw the F.V. so that the plane is inclined to the H.P. (θ_s) and then project the T.V. (apparent shape).

True Shape **Apparent Shape**

①

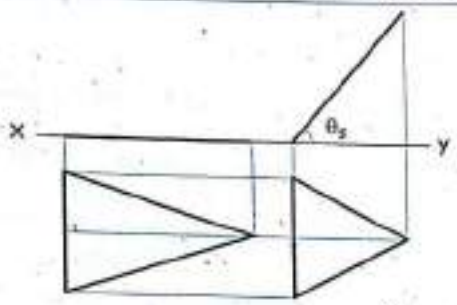

②

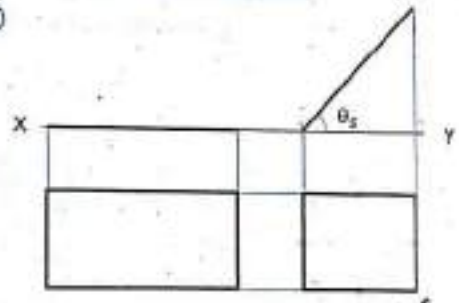

③

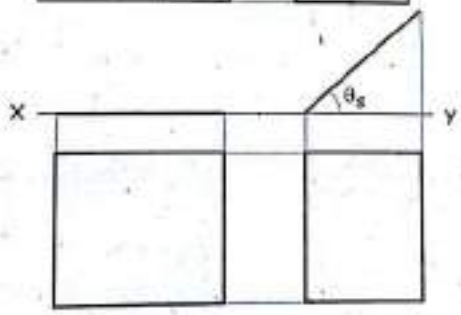

④

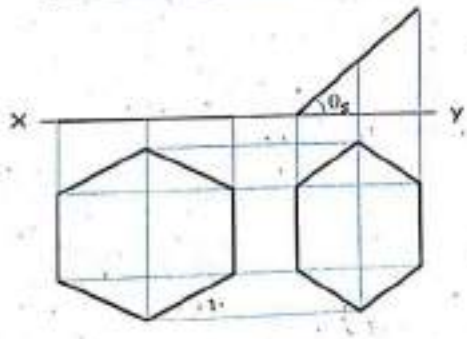

True Shape **Apparent Shape**

①

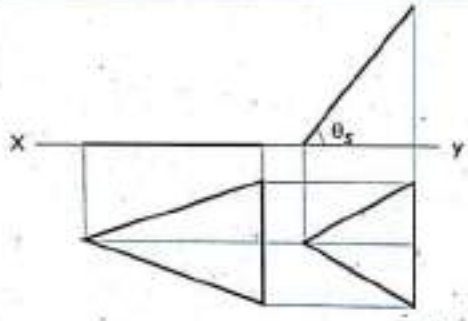

②

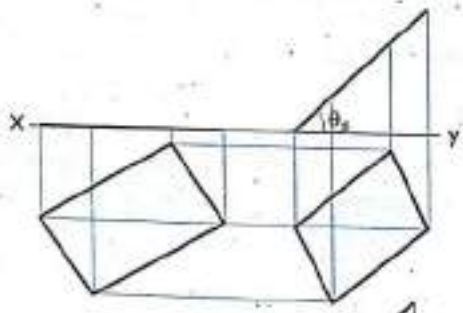

③

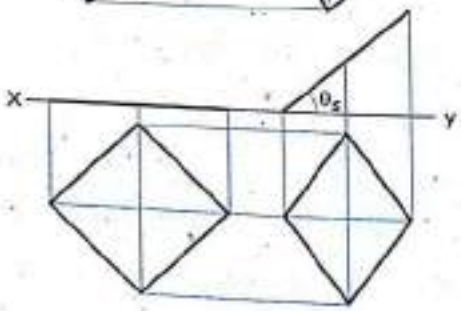

④

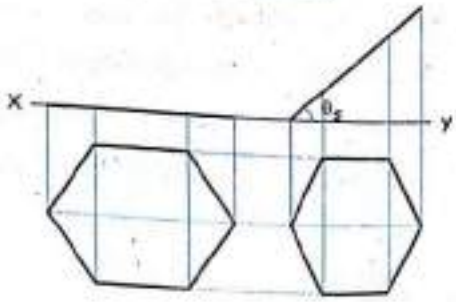

Scanned by CamScanner

True Shape	Apparent Shape	True Shape	Apparent Shape

⑤

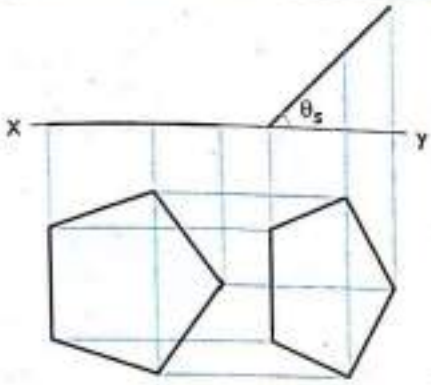

⑤

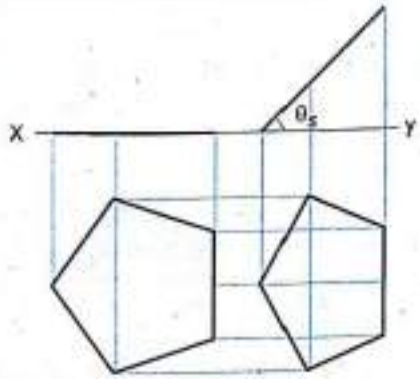

⑥

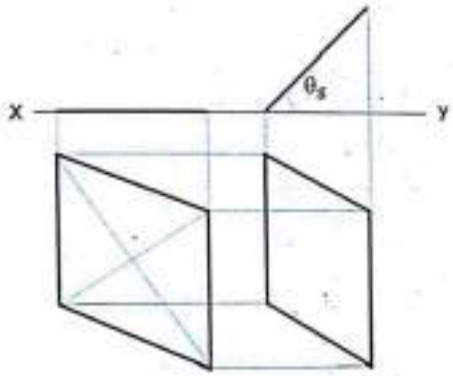

⑥

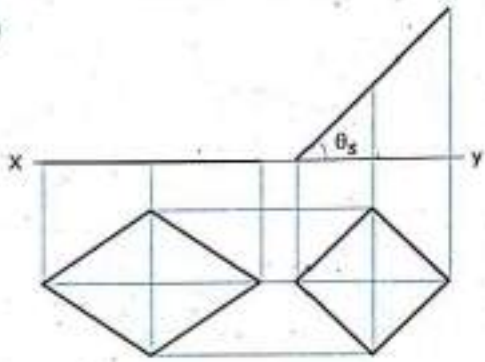

⑦

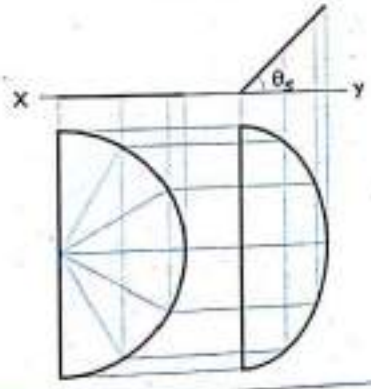

⑦

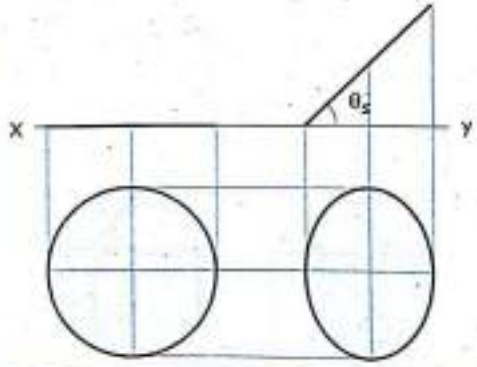

Plane Neither Resting on the Side Nor on the Corner : If any line or the diagonal or diameter of the plane is parallel to H.P. then consider the whole plane parallel to H.P. and that line or diagonal or diameter should be perpendicular to XY line. The line view of the plane should be above XY line.

Diagonal of rectangle is parallel to H.P.

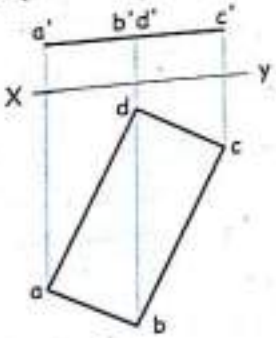

Diameter of circular disc is parallel to H.P.

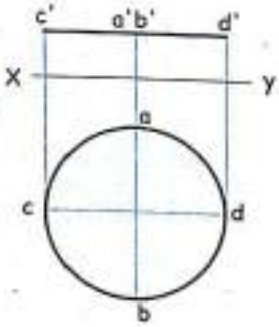

Scanned by CamScanner

Plane Resting on the Side in the V.P.

Stage I : When the plane is resting on the side in the V.P., assume the plane to be on the V.P. such that resting side should be perpendicular to the XY line and draw the F.V. as a true shape of plane and then project the T.V. as a line view coinciding with the XY line.

Stage II : Redraw the T.V. so that the plane is inclined to the V.P. (ϕ_s) and then project the F.V. (apparent shape).

Plane Resting on the Corner in the V.P.

Stage I : When the plane is resting on the corner in the V.P., assume the plane to be on the V.P. such that line joining the resting corner and centre of plane should be parallel to the XY line and draw the F.V. as a true shape of plane and then project the T.V. as a line view coinciding with the XY line.

Stage II : Redraw the T.V. so that the plane is inclined to the V.P. (ϕ_s) and then project the F.V. (apparent shape).

True Shape **Apparent Shape**

①

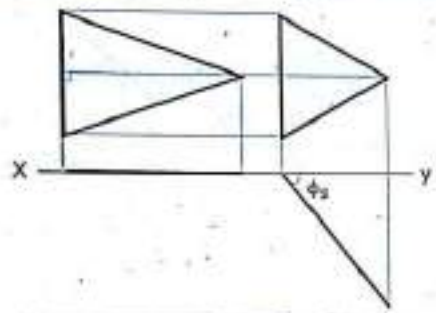

②

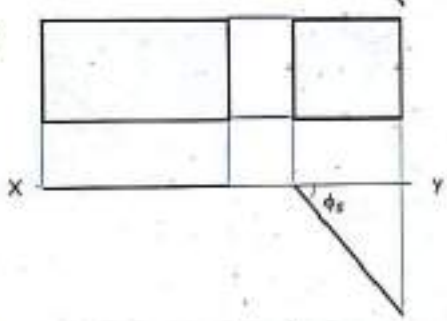

③

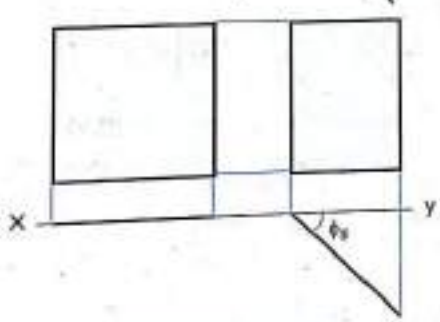

④

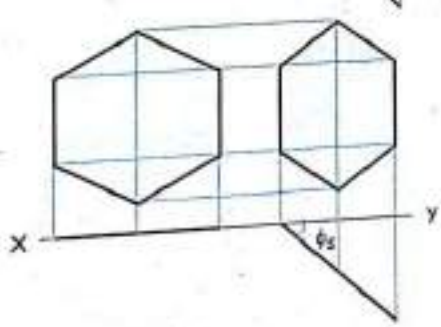

True Shape **Apparent Shape**

①

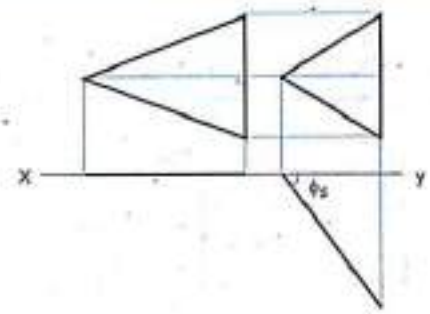

②

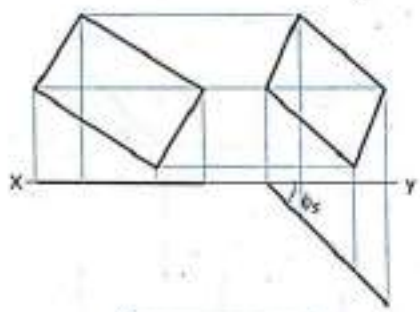

③

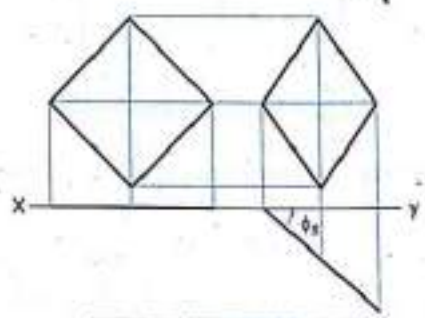

④

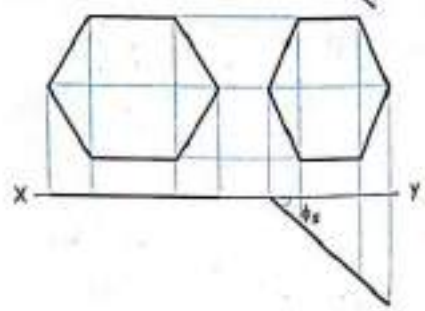

Scanned by CamScanner

True Shape	Apparent Shape	True Shape	Apparent Shape

⑤

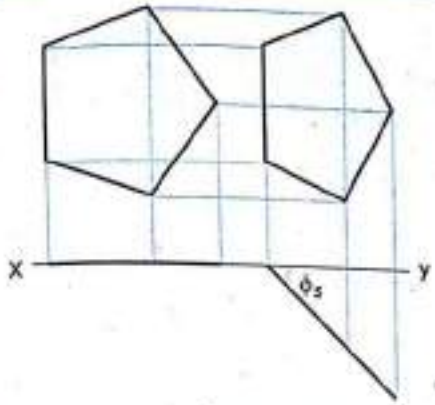

⑤

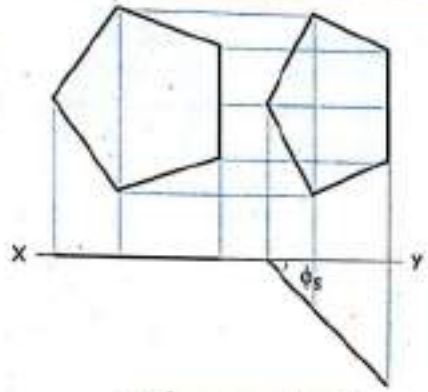

⑥

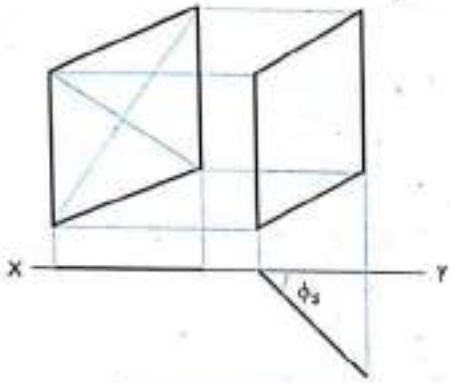

⑥

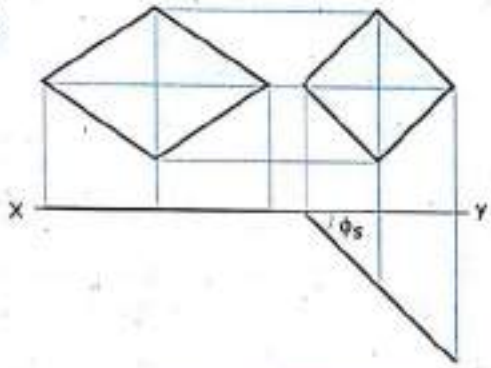

⑦

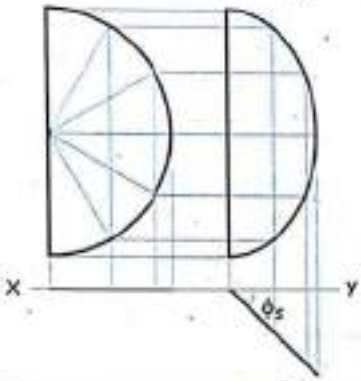

⑦

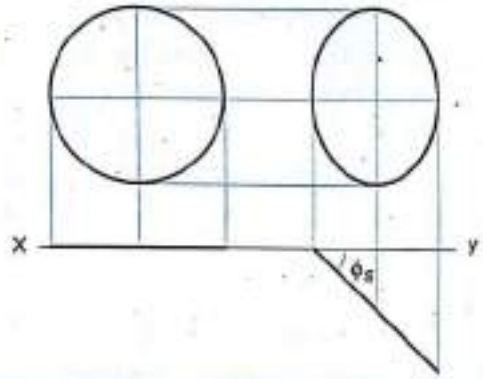

Plane Neither Resting on the Side Nor on the Corner : If any line or the diagonal or diameter of the plane is parallel to V.P. then consider the whole plane parallel to V.P. and that line or diagonal or diameter should be perpendicular to XY line. The line view of the plane should be below XY line.

Diagonal of rectangle is parallel to V.P.

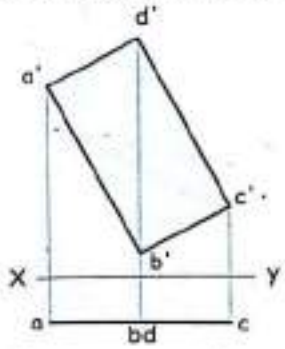

Diameter of circular disc is parallel to V.P.

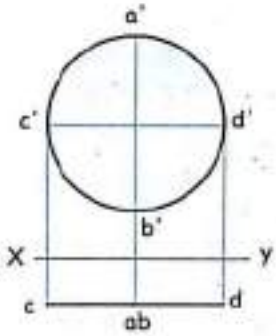

Scanned by CamScanner

9.5 Solved Problems

Problem 11

A square lamina *ABCD* of 50 mm side rest on the corner *A* in the H.P. such that the plane is seen as a rhombus in the top view with diagonal contained by corner *A* measuring 25 mm. Draw its projections and determine surface inclination of the plane with the H.P.

Solution : *Refer figure 9.11.*

Stage I

1. As the plane is resting on corner *A* in the H.P., assume the plane to be on the H.P.
2. Draw the T.V. (*abcd*) as a true shape of a plane (square) such that the line passing through the corner *a* and centre of the square plane is parallel to the *XY* line.
3. Project the F.V. (*a'b'c'd'*) as a line view coinciding with the *XY* line.

Stage II

4. As the top view of a square is appearing to be rhombus with diagonal *AC* = 25 mm. Draw *abcd* such that *ac* = 25 mm and *bd* = 50 mm.
5. Draw two projectors, one through *a* and second through *c* vertically upwards.

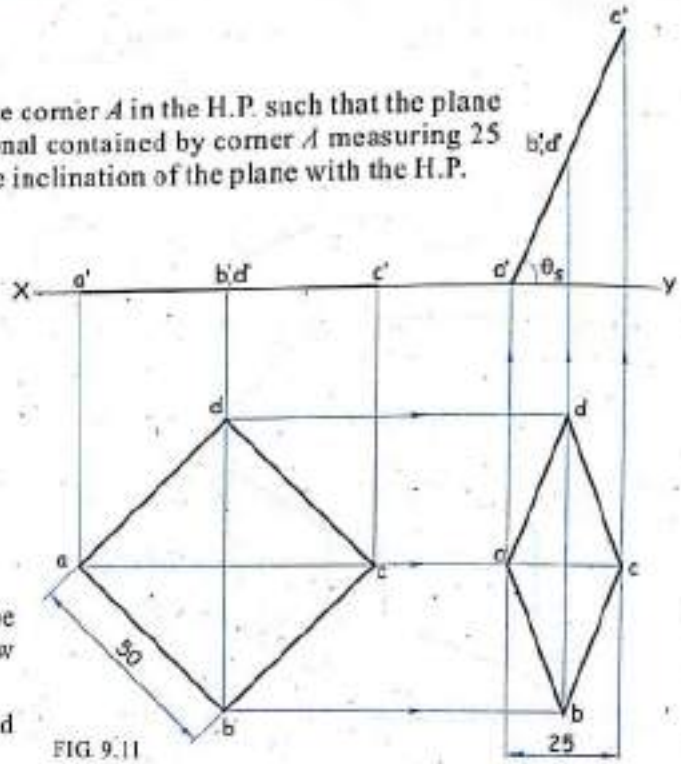

FIG. 9.11

6. Mark *a'* on the *XY* line with centre *a'* and radius equal to diagonal of a *AC* (i.e. length of line view in the F.V.) cut an arc on second projector drawn through *c* and mark *c'*.
7. Join *a'c'* which represents the F.V. of a plane (line view) making an angle θ_s with the H.P. (Measure the value of θ_s.)

Problem 12

A hexagonal plane of 25 mm side has one of its side in the H.P. The surface of a plane is inclined at 45° to H.P. Draw its projections.

Solution : *Refer figure 9.12.*

Stage I

1. As one of the side of a plane is in the H.P., assume the hexagonal plane to be on the H.P.
2. Draw the T.V. (*abcdef*) as a true shape of a plane (hexagon) with side *ab* = 25 mm and perpendicular to the *XY* line.
3. Project the F.V. (*a'b'c'd'e'f'*) as a line view coinciding with the *XY* line.

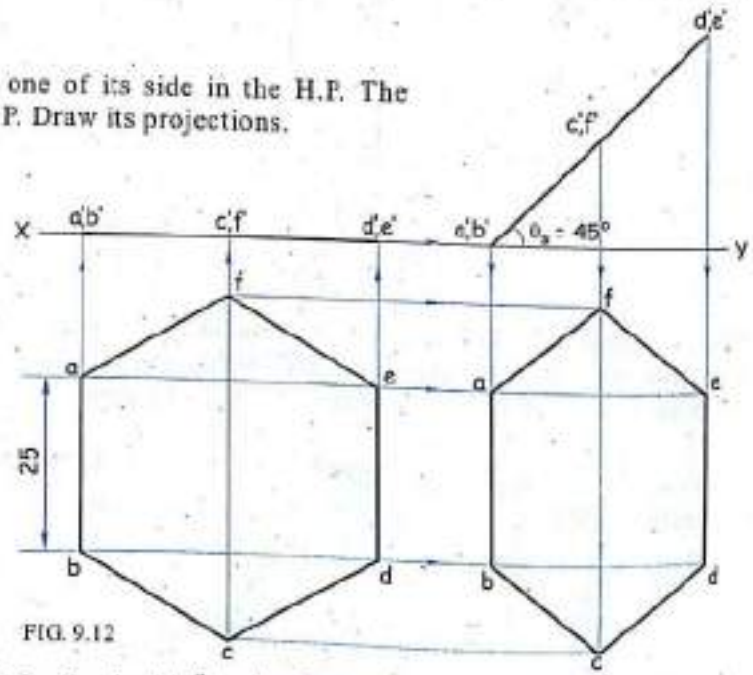

FIG. 9.12

Stage II

4. As the surface of a hexagonal plane is inclined at 45° to the H.P., redraw the F.V. of the I^st stage such that F.V. (*a'b'c'd'e'f'*) line view is inclined at θ_s = 45° to the *XY* line.
5. Project the T.V. (*abcdef*) by usual method.

Scanned by CamScanner

Problem 13

A hexagonal lamina of side 30 mm is resting in the H.P. on one of its corner. The diagonal through that corner makes an angle 45° with the H.P. Draw the projection of plane.

Solution : *Refer figure 9.13.*

Stage I

1. As one of the corner (say *a*) of a plane is resting on the H.P., assume the plane to be in the H.P.
2. Draw the T.V. (*abcdef*) as a true shape of a plane (hexagon) such that the diagonal line *ad* is parallel to *XY* line.
3. Project the F.V. (*a'b'c'd'e'f'*) as a line view which coincides with the *XY* line.

Stage II

4. As diagonal through the point *A* makes an angle 45° with the H.P., the surface of a plane is inclined at $\theta_s = 45°$ with the H.P. So, redraw the F.V. (*a'b'c'd'e'f'*) line view at an angle $\theta_s = 45°$ to *XY* line.
5. Project the T.V. (*abcdef*) by usual method.

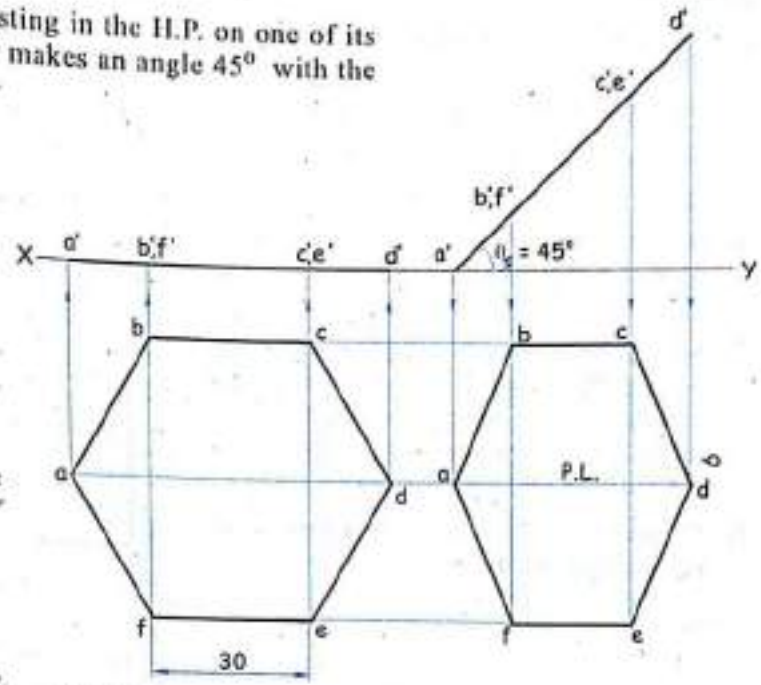

FIG. 9.13

Problem 14

A hexagonal lamina of side 25 mm is resting in the V.P. on one of its corner. Draw the three view, if the diagonal passing through that corner makes an angle 30° to the V.P. Draw using first angle method of projection.

Solution : *Refer figure 9.14.*

It is self explanatory.

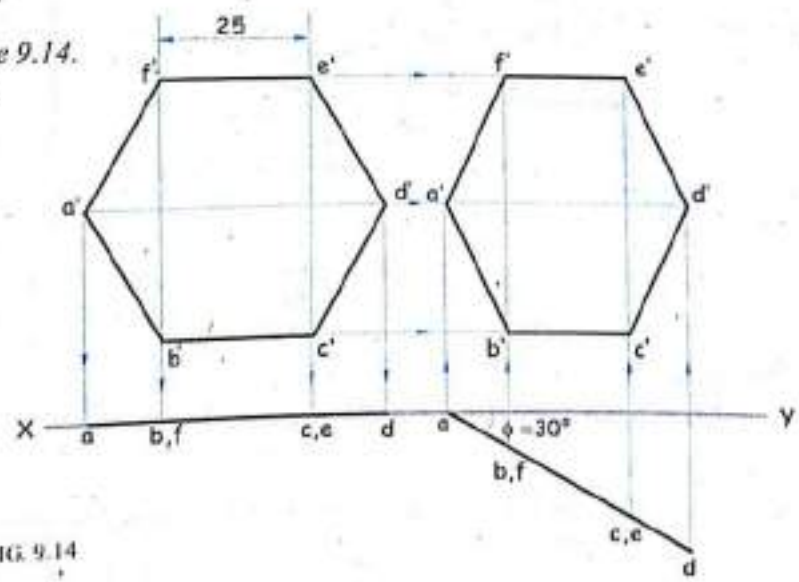

FIG. 9.14

Scanned by CamScanner

Problem 15

A 30° - 60° - 90° set square has its shortest edge 50 mm long and is in the H.P. The T.V. of the set square is an isosceles triangle. Draw projections. Measure the inclination of a plane with the H.P.

Solution : *Refer figure 9.15.*

Stage I

1. As 50 mm shortest edge of a set square is in the H.P., assume the set square to be in the H.P.
2. Draw ab = 50 mm which is perpendicular to the XY line and then construct the triangle abc in the T.V. with the help of known angles, i.e. 30°, 60° and 90°.
3. Project the F.V. ($a'b'c'$) as a line view coinciding with the XY line.

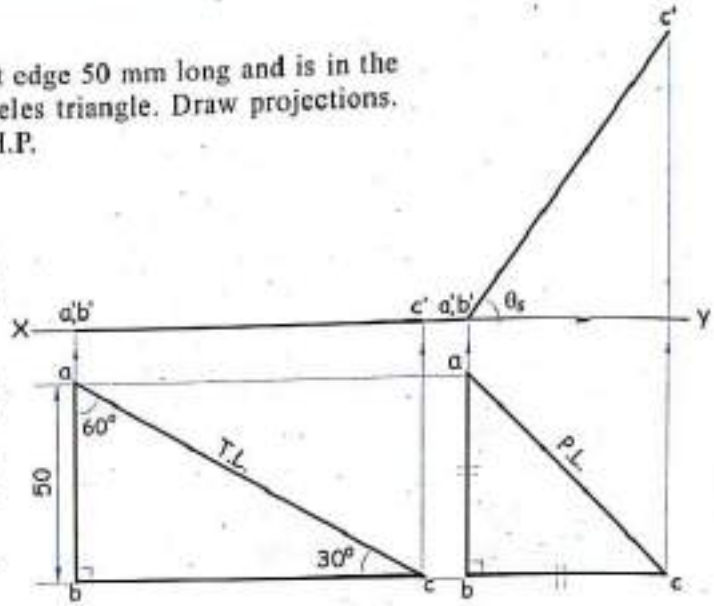

FIG. 9.15

Stage II

4. As the T.V. of a set square appears to be isosceles triangle of 50 mm sides, draw the plan abc with side $ab = bc = 50$ mm.
5. Draw two projectors, one through ab and second through c.
6. Redraw the F.V. of the I^st^ stage as a line view such that $a'b'$ is on the XY line and c' is on the second projector.
7. Measure the inclination θ_s of a line view with the XY line, which gives an inclination of a plane with the H.P.

Problem 16

An isosceles triangular plate with base 45 mm and altitude 60 mm has its base in V.P. Draw its projections if its surface is inclined at 30° to the V.P.

Solution : *Refer figure 9.16.*

Stage I

1. As the base of an isosceles triangular plate is in the V.P., assume the plane to be completely in the V.P.

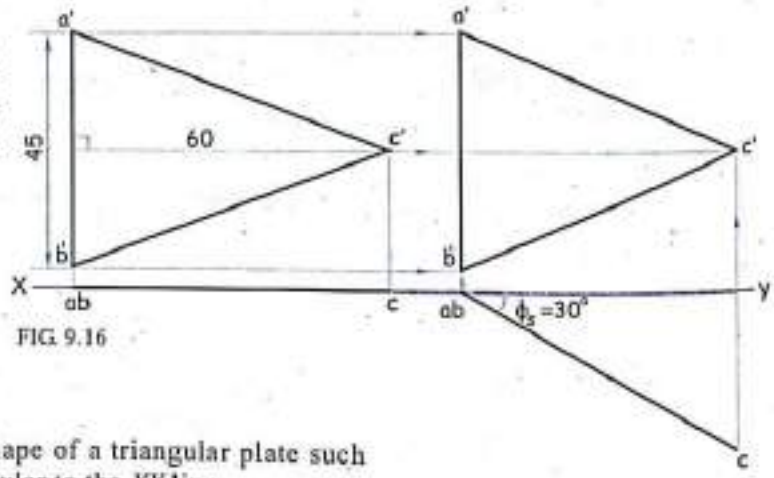

FIG. 9.16

2. Draw the F.V. ($a'b'c'$) as a true shape of a triangular plate such that the base side $a'b'$ is perpendicular to the XY line.
3. Project the T.V. (abc) as a line view coinciding with the XY line.

Stage II

4. As the surface of a triangular plate is inclined with the V.P. at $\phi_s = 30°$, redraw the T.V. of the I^st^ stage (line view) at $\phi_s = 30°$ to the XY line.
5. Project the F.V. ($a'b'c'$) by usual method.

Scanned by CamScanner

Problem 17

An isosceles triangular plate of 50 mm base and 75 mm altitude appears as an equilateral triangle of 50 mm in top view. Draw the projection of a plate if its 50 mm long edge is on the H.P. What is the inclination of a plate with the H.P.?

Solution : *Refer figure 9.17.*

Stage I

1. As 50 mm long edge of a triangular plate is on H.P., assume the triangular plate to be in H.P.
2. Draw ab = 50 mm perpendicular to the XY line and then construct the triangle abc in the T.V. having altitude 75 mm as a true shape.
3. Project the F.V. ($a'b'c'$) as a line view coinciding with the XY line.

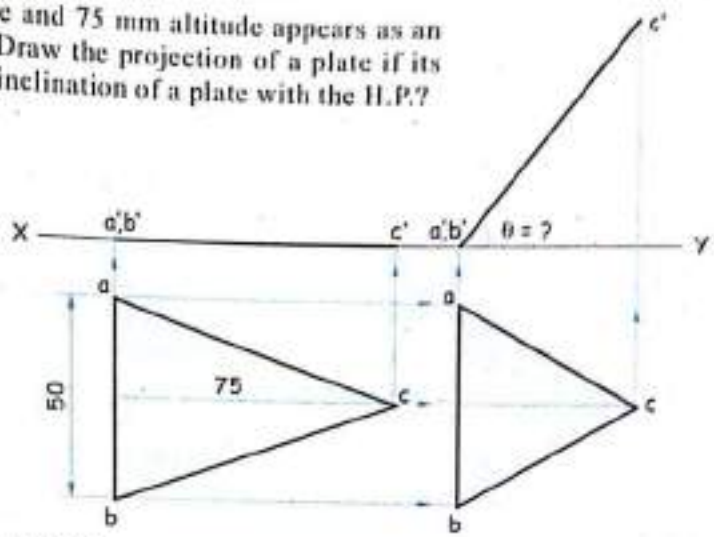

FIG. 9.17

Stage II

4. As the T.V. of an isosceles trianglular plate appears to be equilateral triangle of 50 mm sides, draw the plan abc with side $ab = bc = ca$ = 50 mm.
9. Draw two projectors, one through ab and second through c.
6. Redraw the line view of the F.V. such that $a'b'$ is on the XY line and c' is on the second projector.
7. Measure the inclination θ of a line view with the XY line, which gives an inclination of a plane with the H.P.

Problem 18

A pentagonal plate of 25 mm side has one of its side in the H.P. Draw its projections if its surface is inclined at 45° to the H.P.

Solution : *Refer figure 9.18.*

Stage I

1. As one of the side is in the H.P., assume the plane to be in H.P.
2. Draw the true shape of a pentagon with side ab = 30 perpendicular to the XY line.
3. Project the F.V. as a line view coinciding with the XY line.

Stage II

4. As the surface of a plane is inclined with the H.P. at θ_s = 45°, redraw the F.V. of the Ist stage (line view) at an angle θ_s = 45° to the XY line.
5. Project the T.V. by usual method.

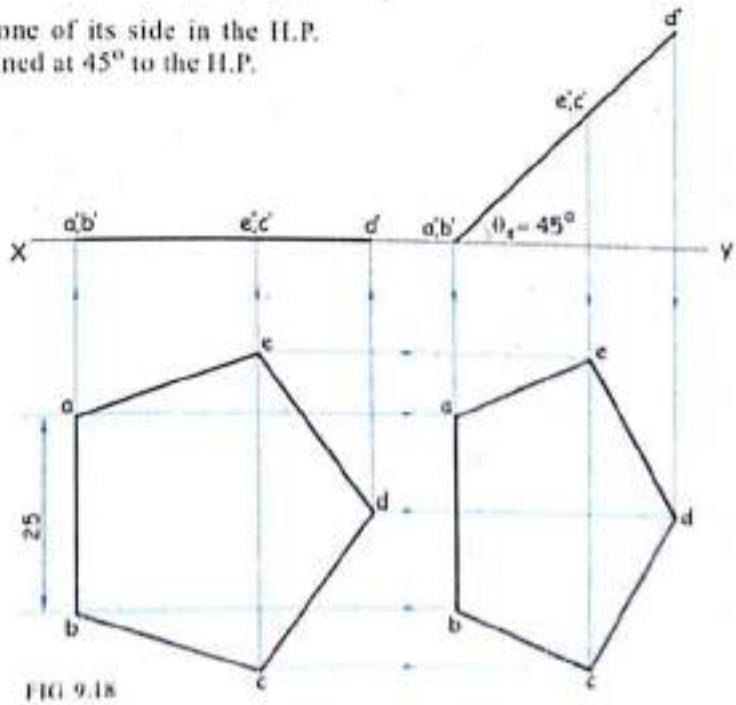

FIG. 9.18

Scanned by CamScanner

Problem 19

A pentagonal plane lamina of sides 30 mm is resting on the H.P. on one of its corner so that the surface makes an angle of 60° with the H.P. Draw the front and top views of a pentagon. *(Dec. '94, M.U.)*

Solution : *Refer figure 9.19.*

Stage I

1. As one of the corner of a pentagonal plane is in H.P., assume the complete plane to be in H.P.
2. Draw the true shape of a pentagon such that the line joining the corner *a* and the centre of a pentagon is parallel to *XY* line.
3. Project the F.V. which is a line view coinciding with the *XY* line.

Stage II

4. As the surface of a plane is inclined at $\theta_s = 60°$ with the H.P., redraw the F.V. of the I^st^ stage (line view) such that it makes an angle $\theta_s = 60°$ with the *XY* line.
5. Project the T.V. by usual method.

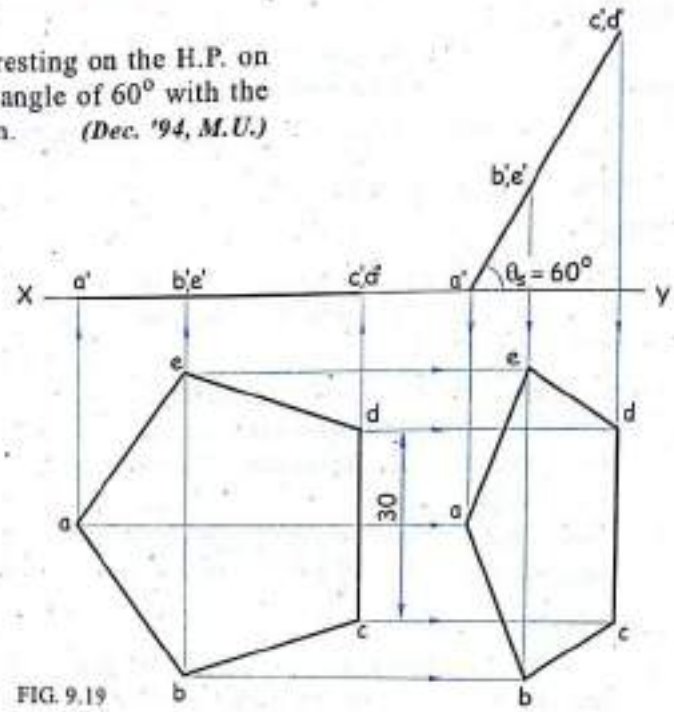

FIG. 9.19

Problem 20

A pentagonal plate of 30 mm side has one of its side in the V.P. The corner opposite to this side contained by the H.P. is 20 mm in front of the V.P. Draw the projections and find the inclination of a surface with the V.P.

Solution : *Refer figure 9.20.*

Stage I

1. As one of the side of a pentagonal plate is in the V.P., assume the complete plate to be in the V.P.
2. Draw the true shape of a pentagon with one of the side (say *a'b'*) perpendicular to the *XY* line.
3. Project the T.V. as a line view on the *XY* line.

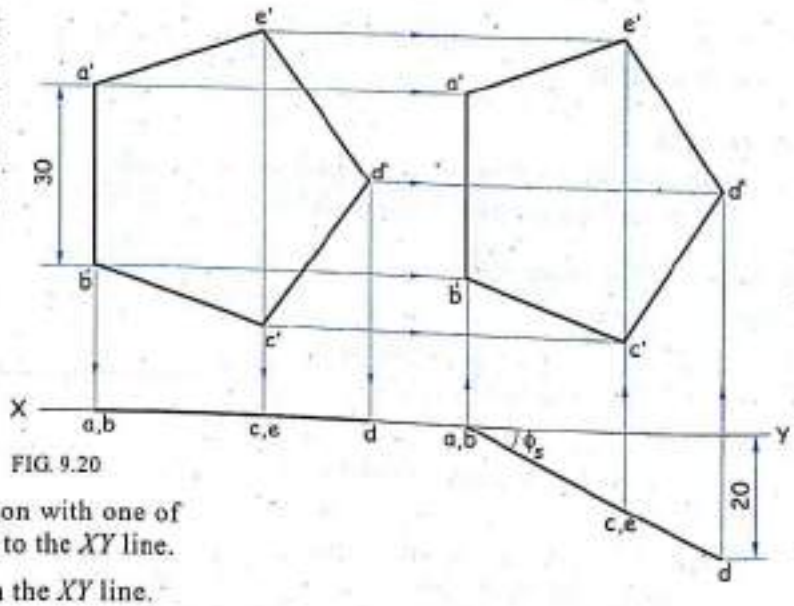

FIG. 9.20

Stage II

4. Corner opposite to side contained by the H.P. is 20 mm in front of the V.P. that means corner *d* is 20 mm below the *XY* line.
5. Redraw the T.V. of the I^st^ stage (line view) having side *ab* on the *XY* and corner *d* 20 mm below the *XY* line.

   (Measure the inclination of line view (i.e. ϕ_s) to answer the inclination of a surface with the V.P.)
6. Project the F.V. by usual method.

Scanned by CamScanner

Problem 21

A circular plate of 60 mm diameter is resting on point A of its rim with its surface inclined at 30° to the H.P. Draw the projections of the plate. *(May '95, M.U.)*

Solution : *Refer figure 9.21.*

Stage I

1. As the circular plate point A of its rim is resting on the H.P., assume the complete plate to be in the H.P.
2. Draw the true shape of a circular plate in the T.V. such that the line drawn through the diameterical points a and b is parallel to the XY line. (The circle may be divided into equal parts.)
3. Project the F.V. as a line view on the XY line.

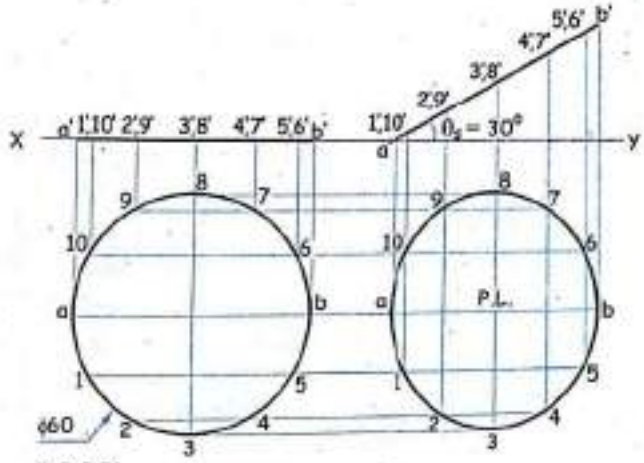

FIG. 9.21

Stage II

4. As the surface of a circular plate is inclined with the H.P. at an angle $\theta_s = 30°$, redraw the F.V. of a I^st stage (line view) such that the point a' is on the XY line and line view makes an angle $\theta_s = 30°$ with the XY line.
5. Project the T.V. by usual method

Problem 22

Draw the projections of a circular plate of 50 mm diameter resting in the V.P. on a point A on the circumference, its surface inclined at 45° to the V.P.

Solution

Refer figure 9.22.

Stage I

1. As the circular plate's point A which is on the circumference is resting in the V.P., assume the complete plate to be in the V.P.
2. Draw the true shape of a circular plate in F.V. with diameter $a'b'$ parallel to the XY line. (Divide the circle into equal parts.)
3. Project the T.V. as a line view on the XY line.

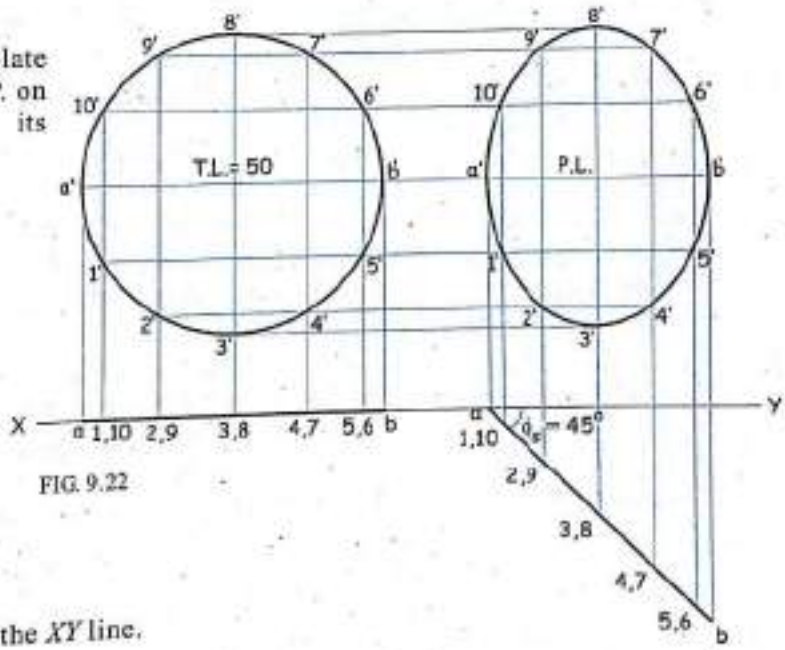

FIG. 9.22

Stage II

4. As the surface of a circular plate is inclined at an angle $\phi_s = 45°$ with the V.P., redraw the F.V. of the I^st stage such that the point a is the on the XY line and the line view makes an angle $\phi_s = 45°$ with the XY line.
5. Project the F.V. by usual method

Scanned by CamScanner

9.6 Exercise

Plane Inclined to Two Principal Planes and Perpendicular to Third

1. A thin plate in the shape of an isosceles triangle has base 35 mm and altitude 50 mm long. Its base is in the V.P. with its surface perpendicular to the H.P. and inclined to the V.P. such that the front view appears as an equilateral triangle. Draw its two views and find the angle made by the plate with the V.P.
2. A set square of 30° - 60°, having the shortest edge 40 mm long appears as a set square of 45° in top view. Draw its projections and state the inclination with the H.P.
3. A 30° - 60° set square has its shortest edge 35 mm long in the V.P. Its surface is perpendicular to the H.P. and inclined to the V.P. such that its front view appears as an isosceles triangle. Draw two views and determine its inclination with the V.P.
4. A rectangle of 50 × 80 appears as a square in top view. Draw its projections and state its inclination with the H.P. Take the shorter edge of the rectangle in the H.P.
5. A circular plate of 60 mm diameter is inclined to the H.P. in such a way that the top view appears to be an ellipse of major axis 35 mm. Draw the projections of a plate and find its inclination with the H.P.
6. A rhombus having diagonals 40 × 70 appears as a square in front view. Draw its three views if one of the corner of a longer diagonal is in the V.P. Find the inclination of a surface with the V.P.
7. A rhombus having diagonals 70 mm and 40 mm, has one of the corners in the H.P. The rhombus is inclined to the H.P. such that the top view obtained is a square. Draw the projections and find the inclination with the H.P.
8. A pentagonal plane of 40 mm sides has one of its side in the H.P. and perpendicular to the V.P. The surface of a plane makes an angle of 45° with the H.P. Draw its projections.
9. A circular plate of diameter 50 mm is resting on the H.P. on a point of its circumference. Its surface is perpendicular to the H.P. and inclined to the V.P. such that its front view appears as an ellipse with minor axis 35 mm. Draw by first angle method, the front view and the top view.
10. A pentagonal plane of 40 mm sides has its corner in the V.P. and surface inclined at 45° to the V.P. The pentagonal plane contains a circular hole of 40 mm diameter at its centre. Draw its two views.
11. Draw the true shape of a plane, the elevation of which is an equilateral triangle of 60 mm sides with one side perpendicular to the *XY* line. The plan is a line inclined at 60° to *XY*.
12. A compass has its legs 60 mm long. The angle between them is 30°. It is resting on the H.P. on the ends of its legs. With the line joining those ends perpendicular to the V.P. and head 35 mm above the H.P., draw F.V., T.V. and end view. Find also the angle made by a compass with the H.P.

Scanned by CamScanner

10 PROJECTIONS OF SOLIDS

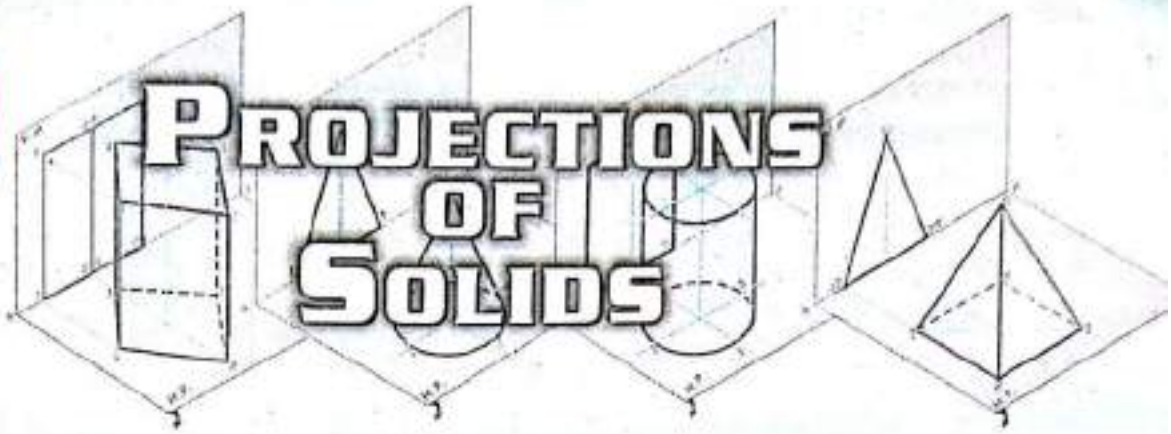

10.1 Introduction

Solids have 3-dimensions, viz. length, breadth and height. Minimum two views, i.e. front view and top view are necessary to represent the solid in orthographic projection.

10.2 Classification of Solids

Solids are classified into two groups, *Polyhedron* and *Solids of Revolution*.

10.2.1 Polyhedron

When a solid is bounded by plane surfaces, it is called as a *polyhedron*. The plane surfaces are termed as the *faces* of solid and the lines of intersection of faces of solid are termed as the *edges*. The point at which any three faces meet is termed as the *corner*. When the faces are equal and regular polygon, the polyhedron is said to be a *regular polyhedron*.

10.2.1[A] Prism

A prism *is bounded by the rectangular faces having its end faces (base) equal, similar and parallel to each other. Refer figure 10.1.*

Axis : The imaginary straight line passing through the centre of bases is called *axis*.

Vertical Edge : Two rectangular faces meet to form the *vertical edge*. It is also known as *longer edge* or *lateral edge*.

Edge of Base : The rectangular face and end face (base) meets to form the *edge of base*. It is also known as *side of base* or *shorter edge*.

Corner : Three faces meet to form the *corner*.

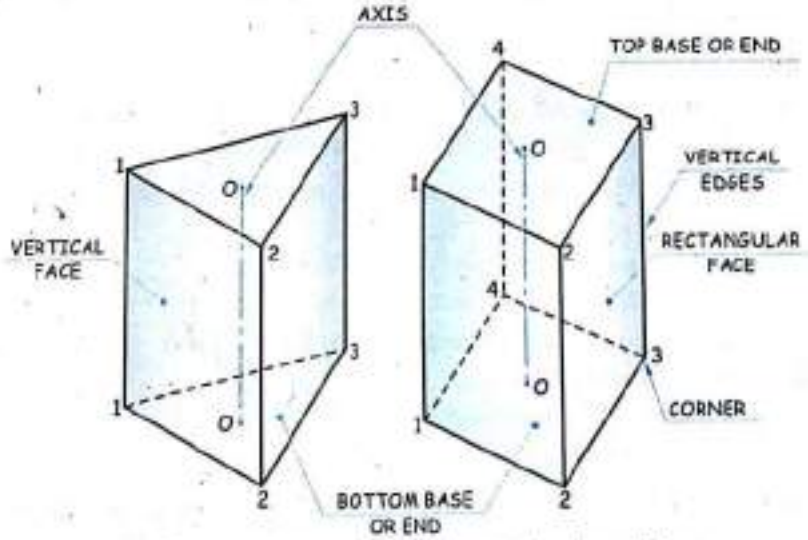

FIG. 10.1 (a) : Triangular Prism FIG. 10.1 (b) : Square Prism

Scanned by CamScanner

The prisms are named as per the shape of the base, e.g. triangular, square, pentagonal, hexagonal etc.

A Right Regular Prism

A prism is said to be a right regular prism *if its axis is perpendicular to its base and its faces are regular rectangles.*

An Oblique Prism

A prism is said to be an oblique prism *if its axis is inclined to its base and its faces are regular parallelogram. Refer figure 10.2.*

Truncated Prism

When the prism is cut by a cutting plane inclined to the base and if the top portion is removed, the remaining portion is called as *truncated prism. Refer figure 10.3.*

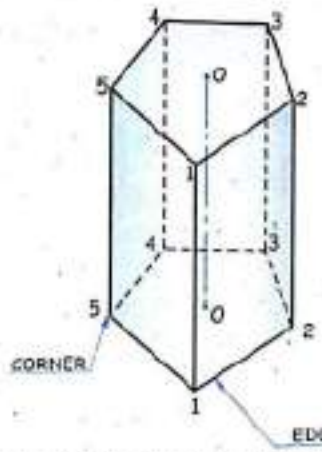

FIG. 10.1 (c) : Pentagonal Prism

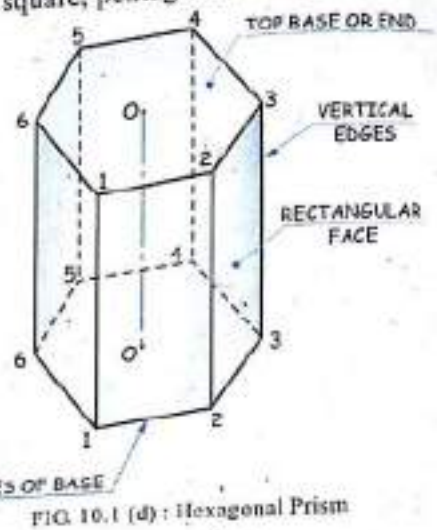

FIG. 10.1 (d) : Hexagonal Prism

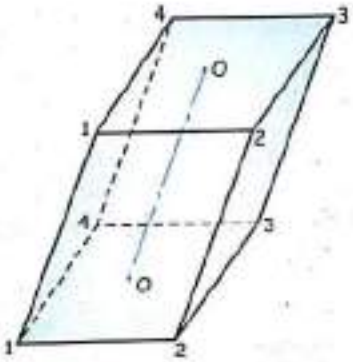

FIG. 10.2 : Oblique Prism

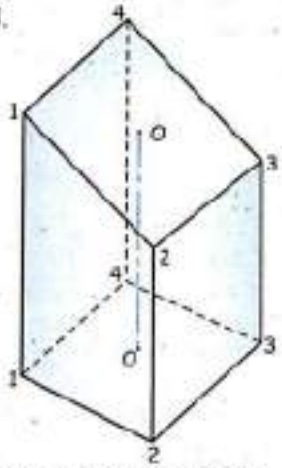

FIG. 10.3 : Truncated Prism

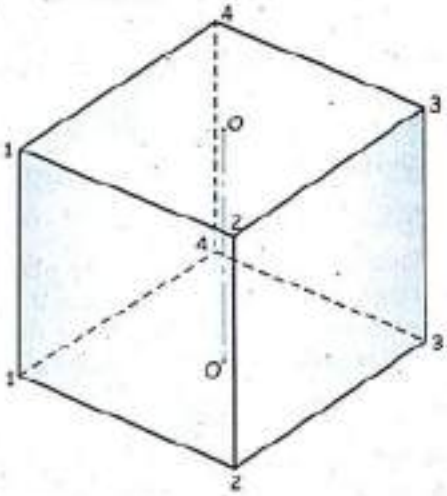

FIG. 10.4 : Cube

Cube

When length, breadth and height of a square prism are equal, the solid is said to be a *cube*. A cube has six equal square faces. It is also known as *hexahedron.[Refer figure 10.4]*

General Practice to Name the Points for Prisms

1. Top edges of base
   and Bottom edges of base ⇒ *1-2, 2-3, ...*
2. Vertical edges ⇒ *1-1, 2-2, ...*
3. Rectangular faces or Vertical faces or Lateral faces ⇒ *1-1-2-2, 2-2-3-3, ...*
4. Corner of top base
   and Corner of bottom base ⇒ *1, 2, ...*
5. Axis ⇒ *O-O*

Note : *Number of edges of a prism are three times of the side of base polygon.*
Number of edges = 3n where n is the number of sides of base polygon.

Scanned by CamScanner

10.2.1[B] Pyramids

A pyramid *is bounded by the triangular faces having one end face (base) as a polygon and other end with all triangular face meeting at a point called as apex (vertex). Refer figure 10.5.*

Axis : The imaginary straight line passing through the apex and the centre of base is called an *axis*.

Slant Edge : Two triangular faces meet to form the *slant edge*. It is also known as edge of *triangular face* or *lateral edge* or *inclined edge* or *longer edge*.

Edge of Base : The triangular face and end face (base) meet to form the *edge of base*. It is also known as the *side of base* or the *shorter edge*.

Corner : Three faces meet to form the *corner*.

The pyramids are named as per the shape of the base, e.g. triangular, square, pentagonal, hexagonal etc.

A Right Regular Pyramid

A pyramid is said to be a right regular pyramid *if its axis is perpendicular to its base and its faces are regular triangles.*

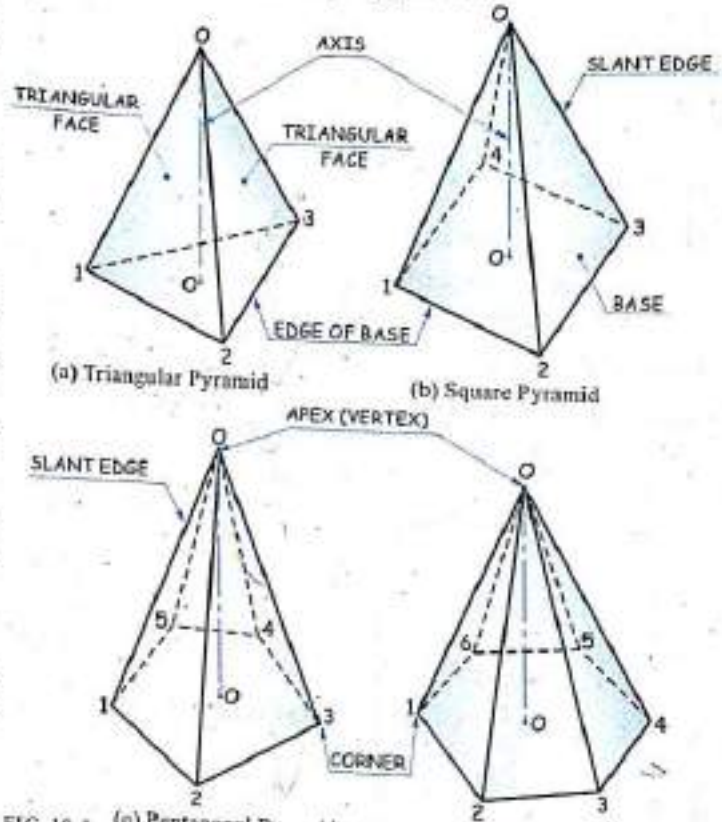

(a) Triangular Pyramid (b) Square Pyramid (c) Pentagonal Pyramid (d) Hexagonal Pyramid

FIG. 10.5

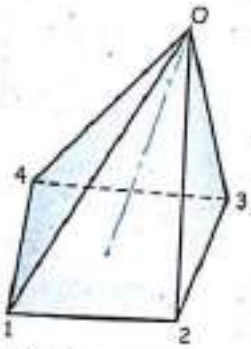

FIG. 10.6 : Oblique Pyramid

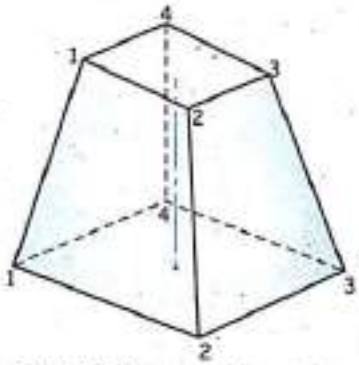

FIG. 10.7 : Frustum of Pyramid

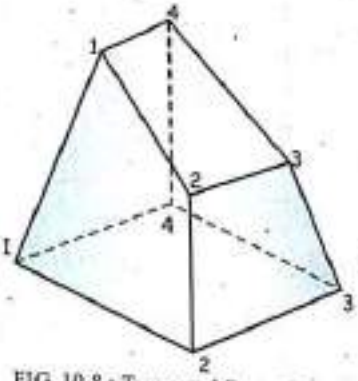

FIG. 10.8 : Truncated Pyramid

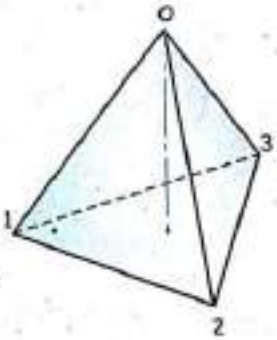

FIG. 10.9 : Tetrahedron

An Oblique Pyramid

A pyramid is said to be an oblique pyramid *if its axis is inclined to its base and triangular faces are not equal. Refer figure 10.6.*

Frustum of Pyramid

When the pyramid is cut by a cutting plane parallel to its base and if the top portion is removed, the remaining portion is called as the *frustum of pyramid. Refer figure 10.7.*

Scanned by CamScanner

Truncated Pyramid

When the pyramid is cut by a cutting plane inclined to its base and if the top portion is removed, the remaining portion is called as the *truncated pyramid. Refer figure 10.8.*

Tetrahedron

Tetrahedron is *an equilateral triangular pyramid which is bounded by four equilateral triangular faces.* All the edges of base and the slant edges are equal. *Refer figure 10.9.*

10.2.2 Solids of Revolution

10.2.2[A] Cylinder

A cylinder is generated by *the revolution of rectangle about one of its side as an axis.* It is bounded by the curved surface having its end faces as a circular base which is parallel to each other.

Axis : The imaginary straight line passing through the centre of bases is called as an *axis.*

Generator of Cylinder : A straight line drawn on the curve surface of the cylinder which is parallel to its axis is called as *generator of cylinder.*

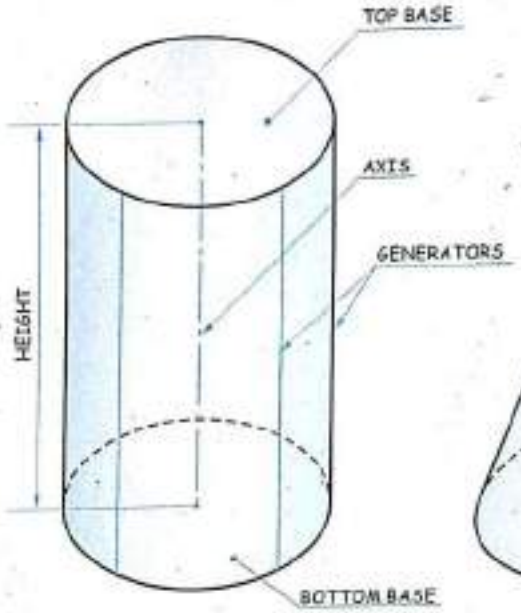

FIG. 10.10 : Right Circular Cylinder

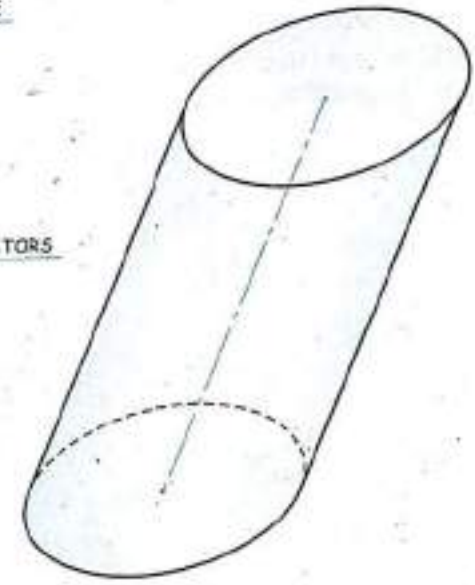

FIG. 10.11 : Oblique Cylinder

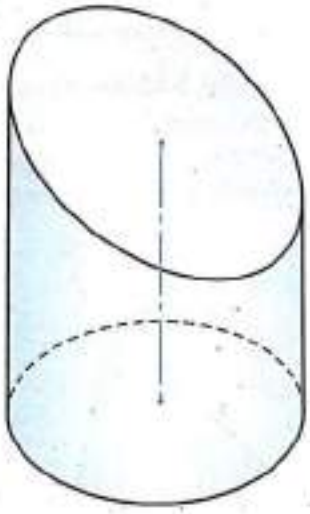

FIG. 10.12 : Truncated Cylinder

An Right Circular Cylinder

A cylinder is said to be a right circular cylinder *if its axis is perpendicular to its base. Refer figure 10.10.*

An Oblique Cylinder

A cylinder is said to be an oblique cylinder *if its axis is inclined to its base. Refer figure 10.11.*

Truncated Cylinder

When the cylinder is cut by a cutting plane inclined to the base and if the top portion is removed, the remaining portion is called as *truncated cylinder. Refer figure 10.12.*

Scanned by CamScanner

10.2.2[B] Cone

A cone is generated by the revolution of right angle triangle about one of its perpendicular side as an axis. The other side containing the right angle by revolving forms a circle is called as *circular base*. The hypotenuse of the right angle triangle, which generates the conical curved surface is called as *genertor*. One end of the cone is circular base and opposite end which is a point is called as an *apex* (*vertex*).

Axis : The imaginary straight line passing through the apex and centre of base is called as an *axis*.

Generator of Cone : A straight line drawn from an apex to the circumference of circular base is called as *generator of cone*.

A Right Circular Cone

A cone is said to be a right circular cone *if its axis is perpendicular to its base. Refer figure 10.13.*

An Oblique Cone

A cone is said to be an oblique cone *if its axis is inclined to its base. Refer figure 10.14.*

Frustum of Cone

When the cone is cut by a cutting plane parallel to its base and if the top portion is removed, the remaining portion is called as *frustum of cone. Refer figure 10.15.*

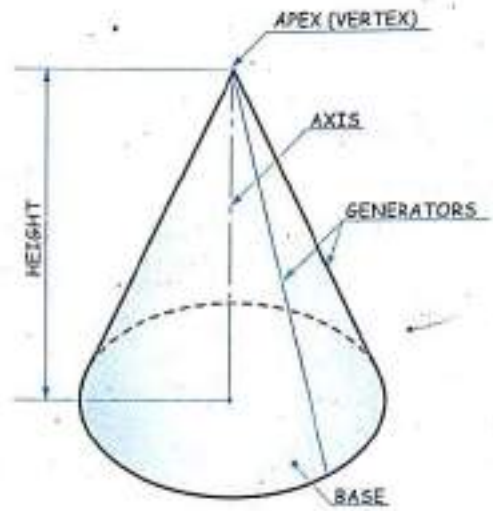

FIG. 10.13 : Right Circular Cone

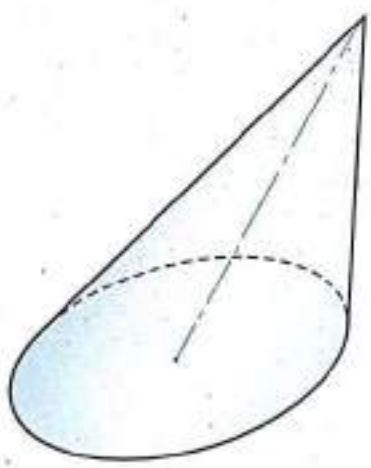

FIG. 10.14 : Oblique Cone

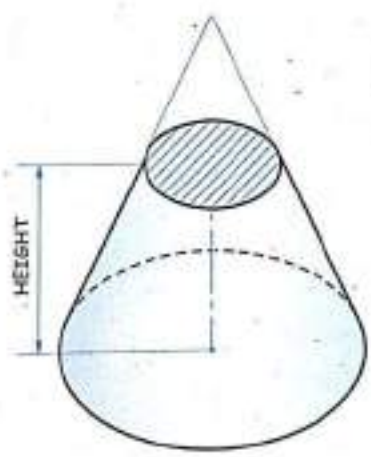

FIG. 10.15 : Frustum of Cone

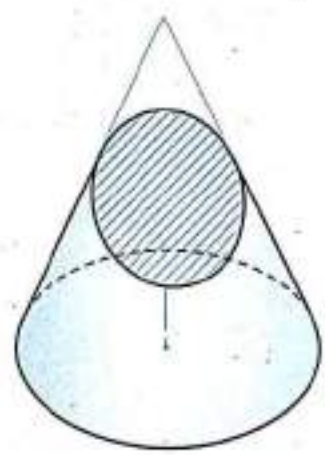

FIG. 10.16 : Truncated Cone

Truncated Cone

When the cone is cut by a cutting plane inclined to its base and if the top portion is removed, the remaining portion is called as *truncated cone. Refer figure 10.16.*

Scanned by CamScanner

10.2.2[C] Sphere

A sphere is generated by the revolution of a semi-circle about its diameter as an axis. All the points lying on the surface of sphere are at equi-distance from the centre of sphere. *Refer figure 10.17.*

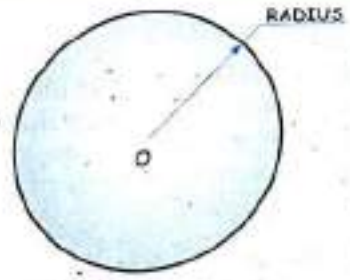

FIG. 10.17

Position of Axis of Solid with Respect to Principal Planes

10.3 Axis of Solid Parallel to Two Principal Plane and Perpendicular to Third.

10.3.1 Axis of Solid Perpendicular to the H.P. and Parallel to the V.P.

Problem 1

A square prism, edge of base 40 mm and axis height 60 mm standing on its base on the H.P. Draw the projection of a solid if its edges of a base are equally inclined to the V.P.

Solution

Refer figure 10.18 (a) and (b).

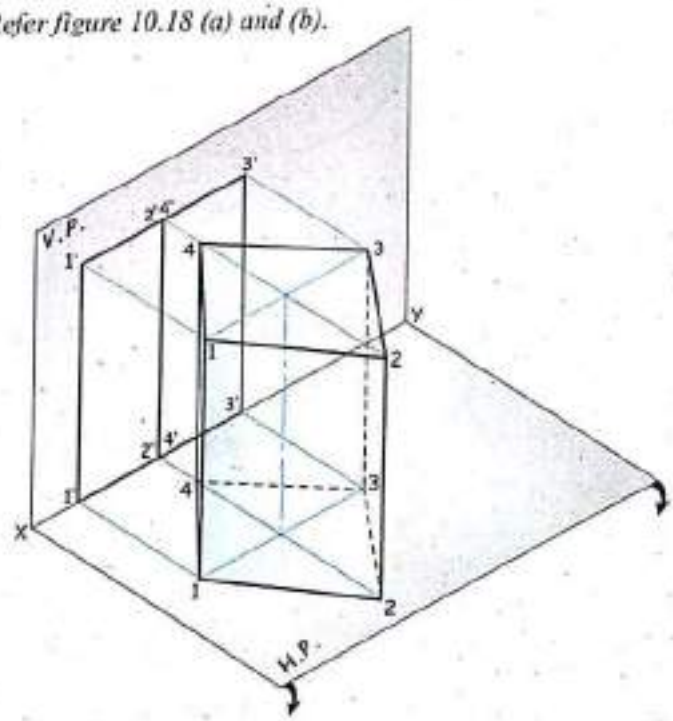

FIG. 10.18 (a)

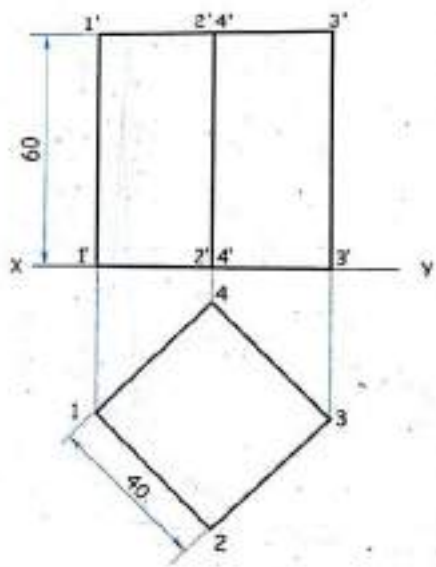

FIG. 10.18 (b)

When axis of a solid is perpendicular to the H.P. and parallel to the V.P. or the base of a solid is on the H.P., the base becomes parallel to the H.P. Assuming the base of a solid as a plane, we can consider the discussion of previous chapter and can conclude that the projection of the base on the

Scanned by CamScanner

H.P. is of true shape of the base polygon. Hence, draw the top view first, which represents the true shape of base polygon and then project the F.V.

Construction

Refer figure 10.18 (b).

1. Draw the T.V. with the edge of base equally inclined to the *XY* line.
2. Project the F.V. by taking the given length of an axis.
3. Name the corners as shown. The corners of top and bottom base as *1, 2, 3, 4* respectively.

Problem 2

A square pyramid, base 40 mm side and axis 60 mm long has its base in the H.P. with two sides of base perpendicular to the V.P. Draw its projections.

Solution

Refer figure 10.19 (a) and (b).

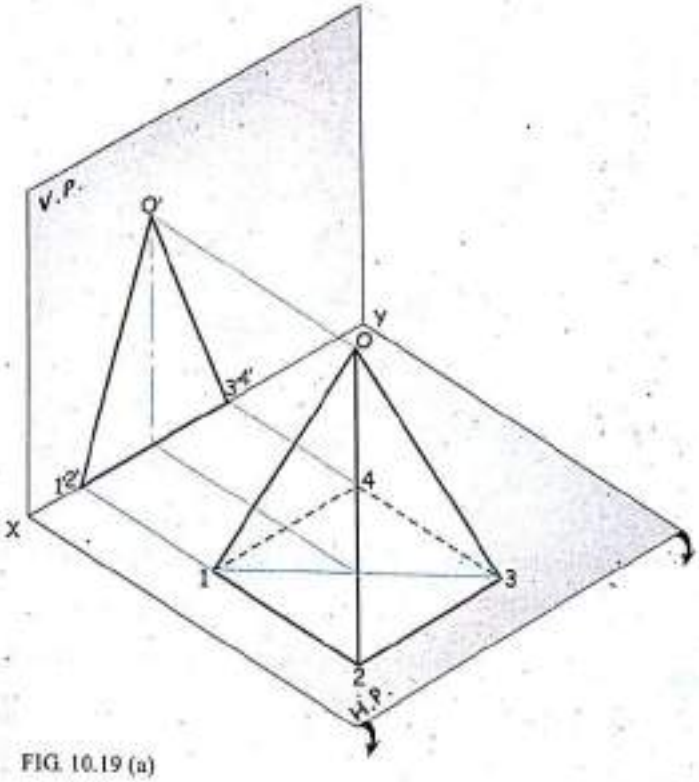

FIG. 10.19 (a)

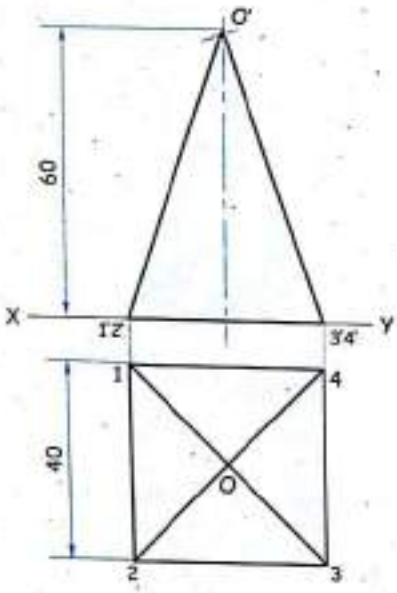

FIG. 10.19 (b)

When base is in the H.P., axis becomes perpendicular to the H.P. and parallel to the V.P.

Construction

1. Draw the T.V. with two edges of base perpendicular to the *XY* line.
2. Project the F.V. by taking the given length of an axis.
3. Name the corners as shown.

Scanned by CamScanner

Problem 3

A cylinder of base diameter 40 mm and axis length 60 mm has its base in the H.P. Draw its projections.

Solution

Refer figure 10.20 (a) and (b).

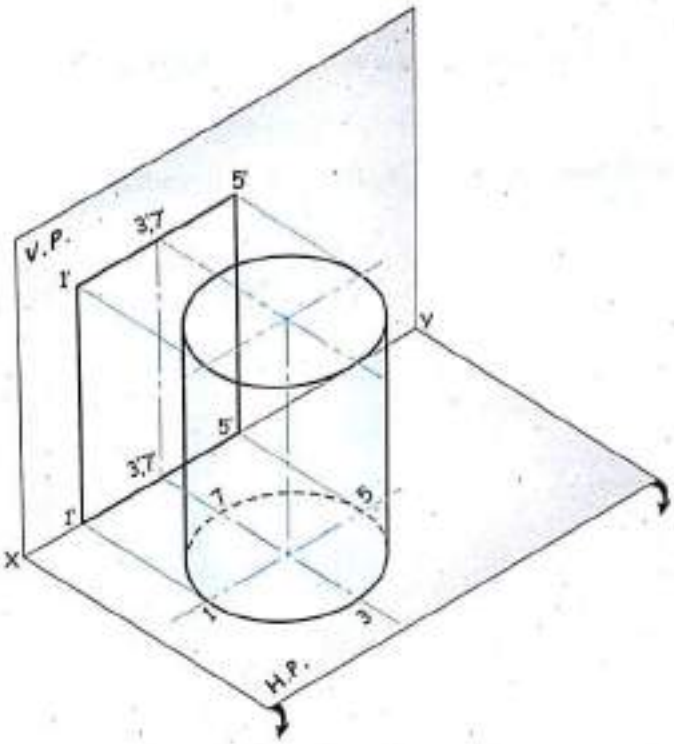

FIG. 10.20 (a)

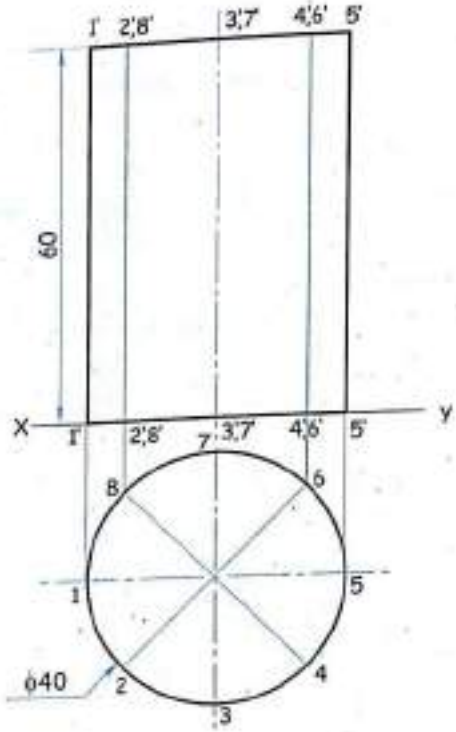

FIG. 10.20 (b)

When base is in the H.P., the axis becomes perpendicular to the H.P. and parallel to the V.P.

Construction

1. Draw the T.V. of the cylinder as a circle.
2. Project the F.V. by taking the given length of an axis.

How to Construct the Generators if Required

3. Divide the circle of the T.V. into same equal parts (say 8 or 12).
4. Name the equal division of circular base as *1,2,3, ... 8* or *12*.
5. Project these points vertically upwards and construct the corresponding generators in the F.V.

Scanned by CamScanner

Problem 4

A right circular cone with base diameter 40 mm and axis height 50 mm long, stands vertically on its base on the H.P. Draw its projections.

Solution

Refer figure 10.21 (a) and (b).

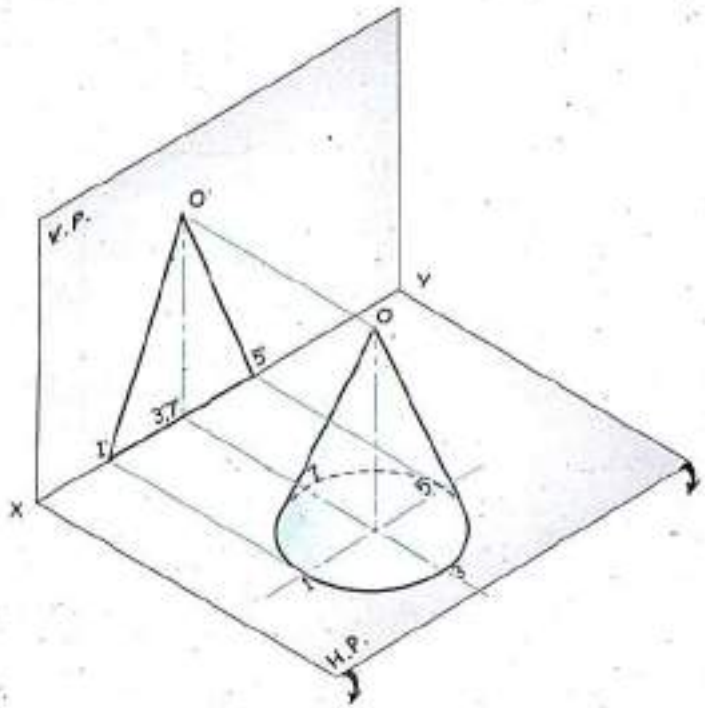

FIG. 10.21 (a)

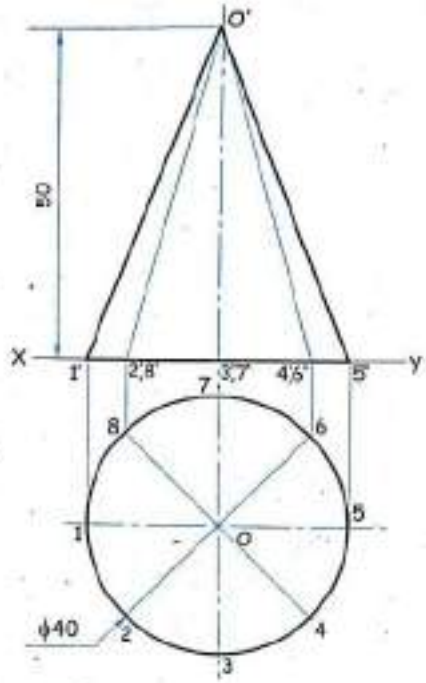

FIG. 10.21 (b)

Construction

1. Draw the T.V. of the cone as a circle.
2. Project the F.V. by taking the given length of an axis.

How to Construct the Generators if Required

3. Divide the circle of the T.V. into same equal parts (say 8 or 12).
4. Name the equal division of circular base as *1,2,3, ... 8* or *12*.
5. Project these points vertically upwards and construct the corresponding generators in the F.V.

Conclusion

When the axis is perpendicular to the H.P. and parallel to the V.P.

1. Projection of the base of a solid on the H.P. is the true shape of the base polygon.
2. F.V. of the axis is perpendicular to the *XY* line and is of the true length.
3. Start with T.V. and project the F.V.

Scanned by CamScanner

10.3.2 Axis of Solid Perpendicular to the V.P. and Parallel to the H.P.

Problem 5

A square prism having side of base 40 mm, axis length 60 mm and has its base in the V.P. Draw the projection of a square prism if the side of base is parallel to the H.P.

Solution

Refer figure 10.22 (a) and (b).

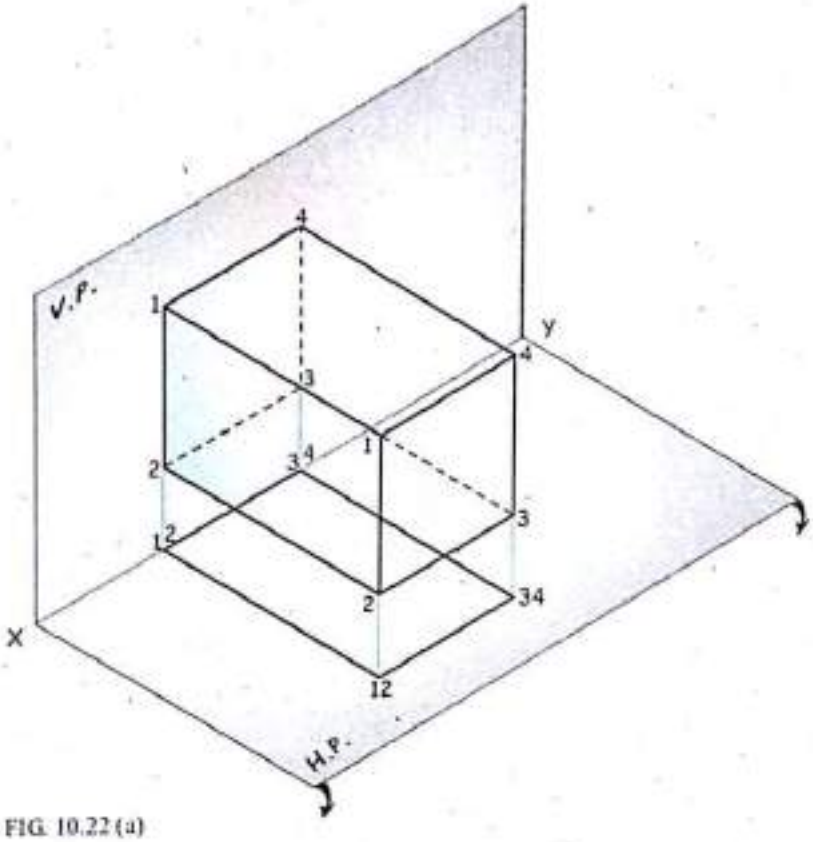

FIG. 10.22 (a)

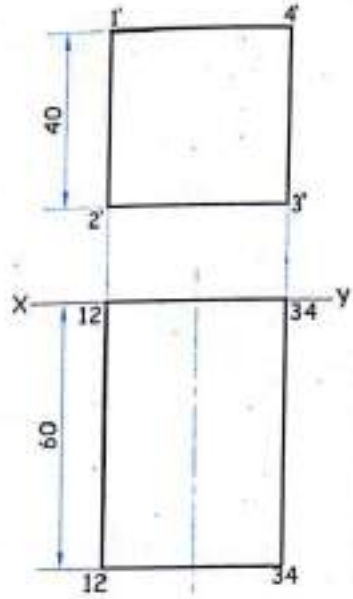

FIG. 10.22 (b)

When axis of a solid is perpendicular to the V.P. and parallel to the H.P. or the base of a solid is on the V.P., the base becomes parallel to the V.P. Hence, we can conclude that the projection of the base on the V.P. is of the true shape of the base polygon. Draw the F.V., which represents the true shape of the base polygon and then project the T.V.

Construction

1. Draw the F.V. with the side of base perpendicular to the *XY* line.
2. Project the T.V. by taking the given length of an axis.
3. Name the corners as shown.

Scanned by CamScanner

Problem 6

A square pyramid having edge of base 40 mm, axis 60 mm long has its base in the V.P. such that its edges of base are equally inclined to the H.P. Draw the projection.

Solution

Refer figure 10.23 (a) and (b).

When base is in the V.P., axis becomes perpendicular to the V.P.

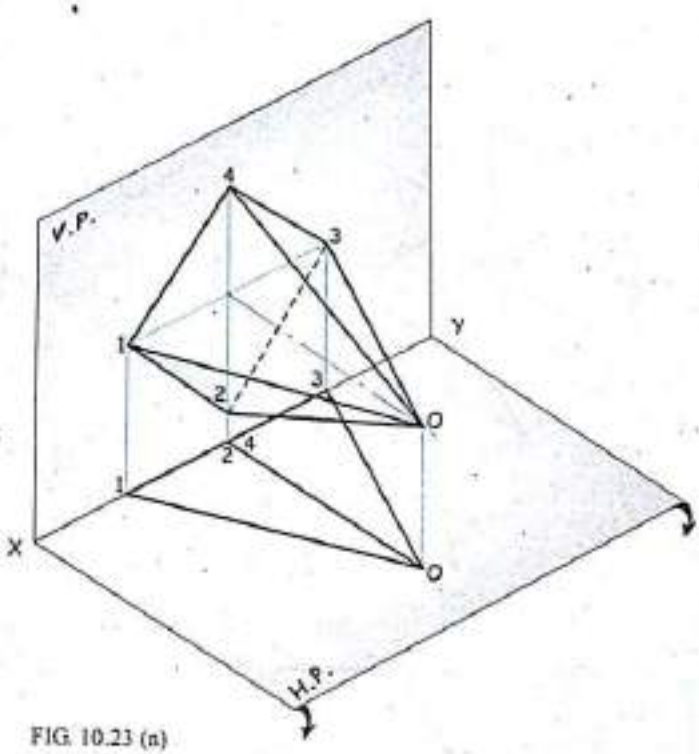

FIG. 10.23 (a)

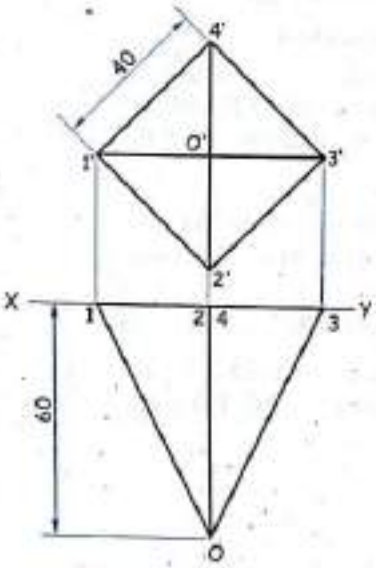

FIG. 10.23 (b)

Construction

1. Draw the F.V. with two edges of base equally inclined to the *XY* line.
2. Project the T.V. with the given length of an axis.
3. Name the corners as shown.

Conclusion

When the axis is perpendicular to the V.P. and parallel to the H.P.

1. Projection of the base of a solid on V.P. is the true shape of the base polygon.
2. T.V. of an axis is perpendicular to the *XY* line and is of the true length.
3. Start with F.V. and project the T.V.

Scanned by CamScanner

10.3.3 Axis of Solid Parallel to the H.P. and V.P. and Perpendicular to the P.P.

Problem 7

A hexagonal prism, side of base 30 mm, axis length 70 mm has its axis parallel to the H.P. and V.P. such that one of the rectangular face is in the H.P. Draw its projections.

Solution

Refer figure 10.24 (a) and (b).

It is self explanatory.

Conclusion

When the axis of a solid is parallel to the H.P. and V.P. and perpendicular to the P.P.

1. Projection of the base of a solid on P.P. is the true shape of the base polygon.
2. Start with the S.V. and project the F.V. and T.V.

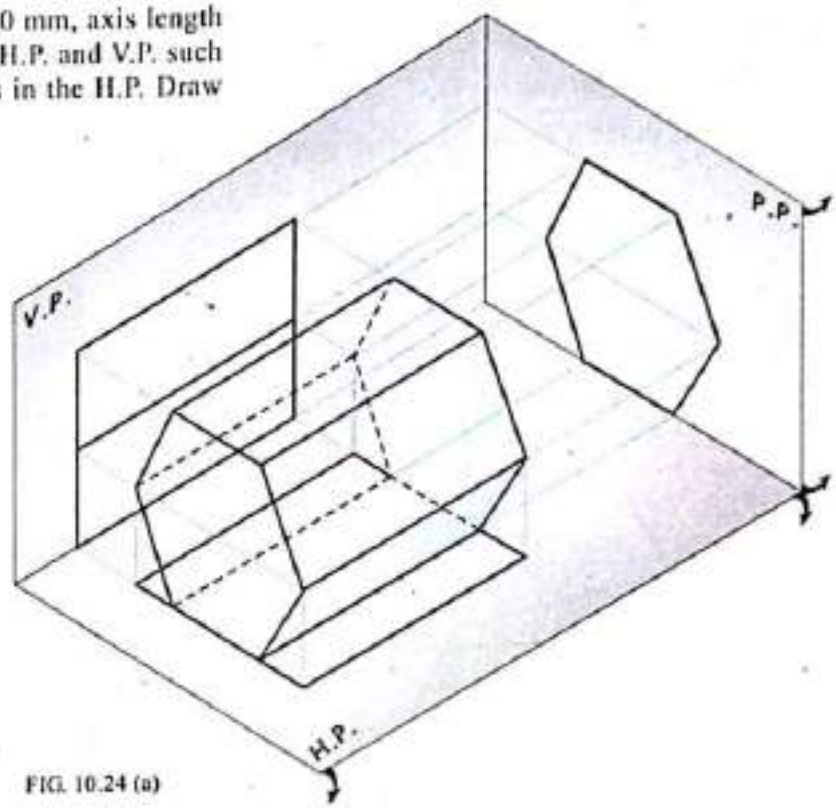

FIG. 10.24 (a)

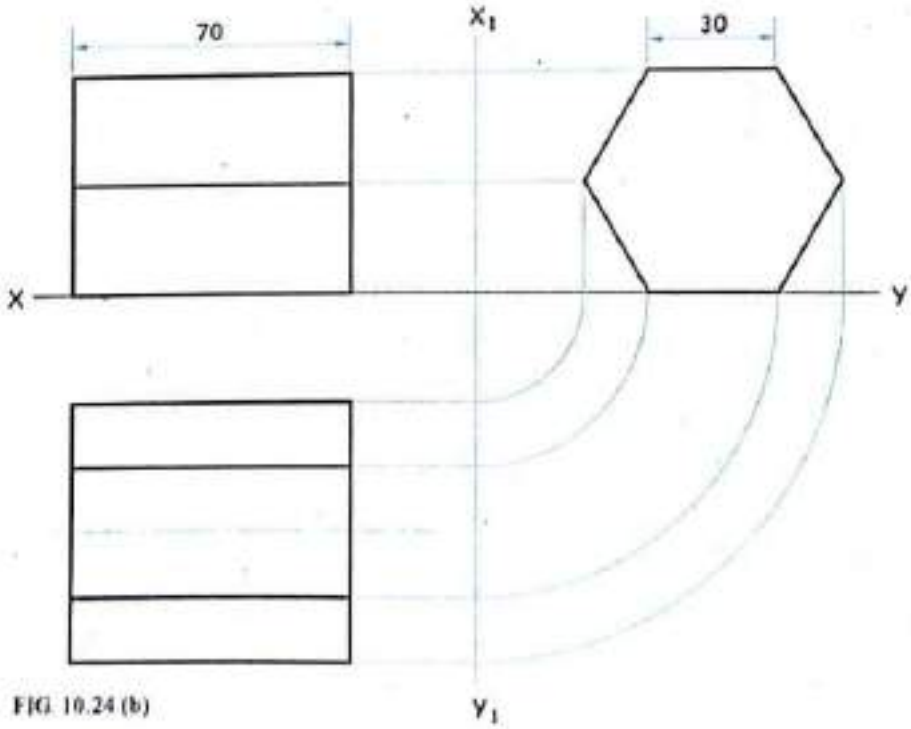

FIG. 10.24 (b)

Scanned by CamScanner

Axis of Solid Parallel to One Principal Plane and Inclined to Other

10.4 Axis of Solid is Directly/ Indirectly Inclined to the H.P. At an Angle θ and Parallel to the V.P.

Problem 8

A square prism with side of base 40 mm and axis height 60 mm is resting on the H.P. on one of its base corner such that its axis is inclined at 30° to the H.P. and parallel to the V.P. Draw its projections.

Solution

Refer figure 10.25.

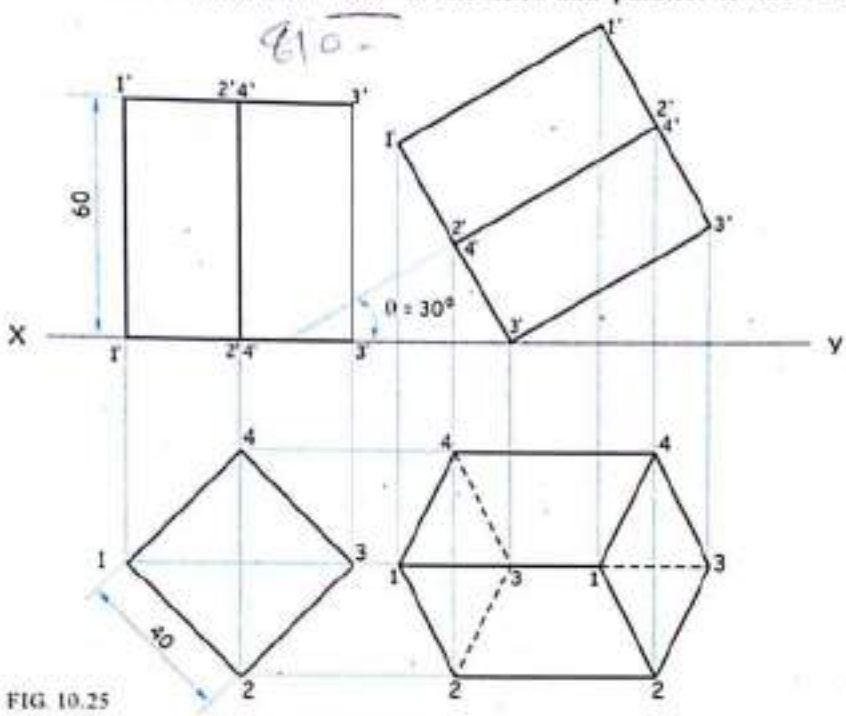

FIG. 10.25

Stage I

1.* When the axis of a solid is inclined to the H.P. and one of its base corner is in the H.P., assume that the complete base of a solid to be resting in the H.P. such that the edges of base are equally inclined to the *XY* line or centre of the base and the corner on which it is resting should pass through a line parallel to the *XY* line.

* *If a solid rests on one of its corner of base in the H.P., then the edges of base containing a corner which is in the H.P. makes an equal inclination with the H.P.*

2. Draw the true shape of base in the T.V. and project its F.V. with the given axis length.

Stage II

3. Redraw the F.V. of a solid as per the given inclination of an axis at an angle θ = 30° with the *XY* line.
4. Project the points from the F.V. vertically down and project the points from the T.V. of the first stage horizontally right to get the corresponding point of the T.V. as a final projection.
5.** Join the points in a proper sequence with care of *visibility and non-visibility.*

** **Care of Visibility and Non-visibility**

(a) The outline, i.e. boundary of any view or projection is always visible.

(b) The edges, corners and faces of an object nearest to the observer are always visible.

(c) The edges, corners and faces of an object farthest to the observer are not visible if they fall within the outline of a view.

Scanned by CamScanner

Problem 9

A square prism, side of base 40 mm and axis height 60 mm is resting on the H.P. on one of its base edge such that its axis is inclined at 60° to the H.P. and parallel to the V.P. Draw its projections.

Solution

Refer figure 10.26 (a) and (b).

90 - 60°

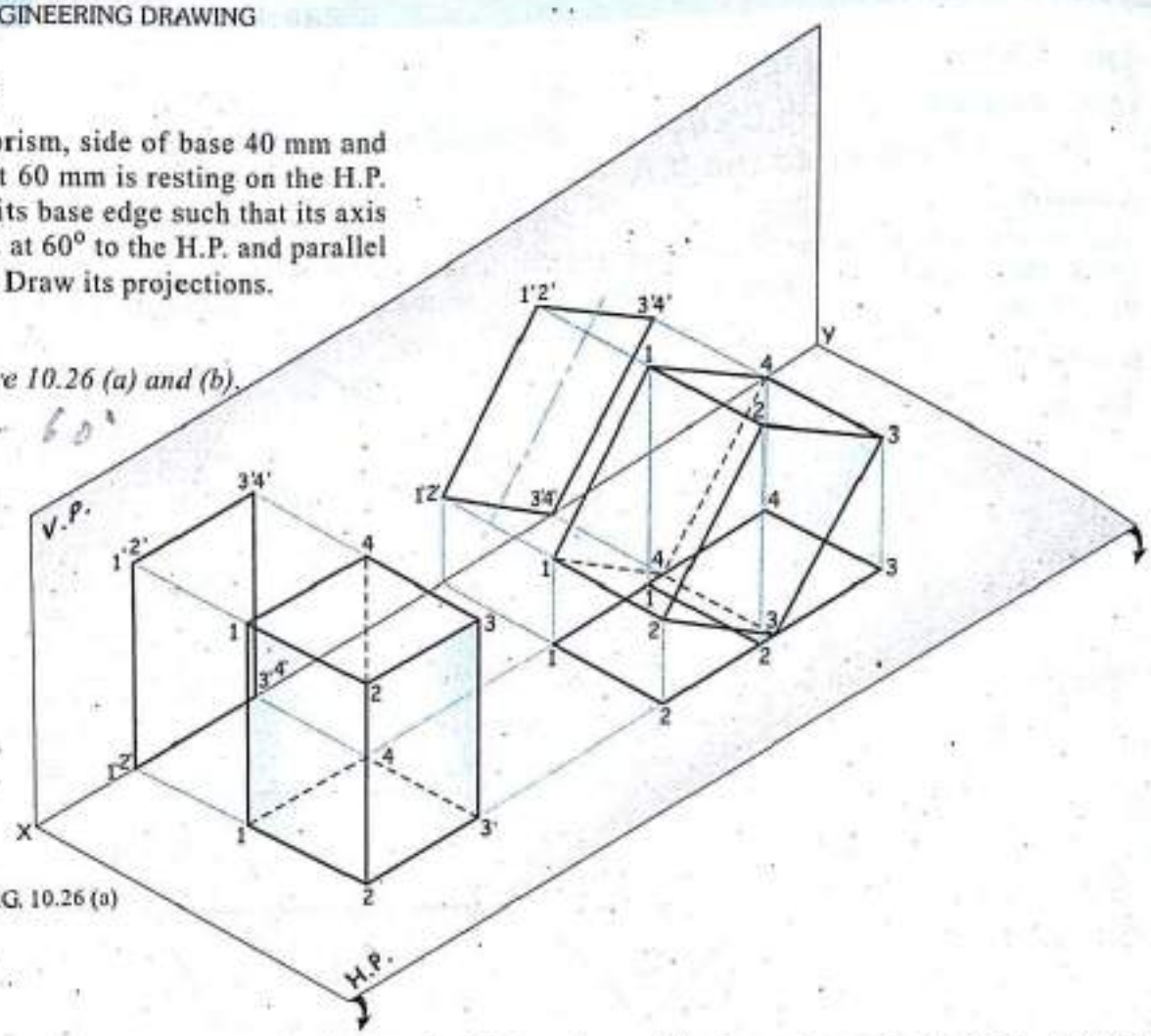

FIG. 10.26 (a)

Stage I

1. When the axis of a solid is inclined to the H.P. and one of its base edge is in the H.P., assume that the complete base of a solid to be resting in the H.P. such that the edges of base are perpendicular to *XY* line
2. Draw the true shape of base in the T.V. and project its F.V. with the given axis length.

Stage II

3. Redraw the F.V. of a solid as per the given inclination of an axis at an angle $\theta = 60°$ with the *XY* line.
4. Project the points from the F.V. vertically down and project the points from T.V. of first stage horizontally right to get the corresponding points of the T.V. as a final projection.
5. Join the points in a proper sequence with care of *visibility and non-visibility.*

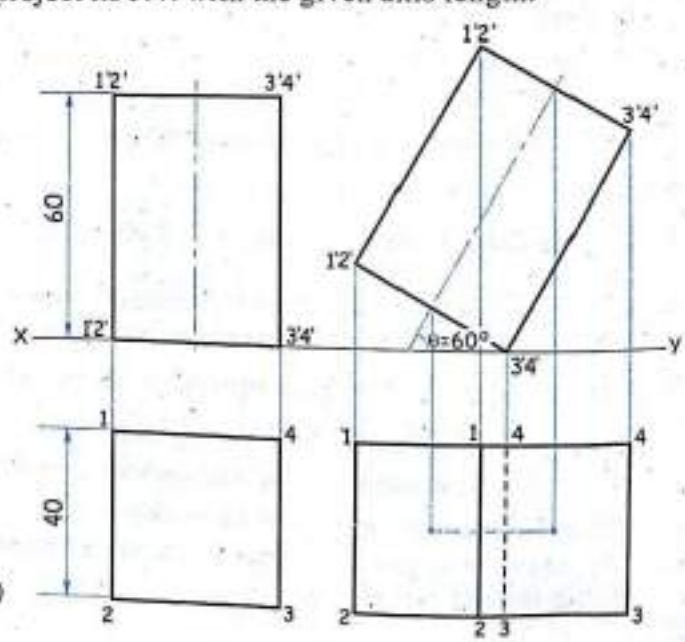

FIG. 10.26 (b)

Scanned by CamScanner

Problem 10

A square pyramid, side of base 40 mm and axis length 60 mm has one of the side of a base in the H.P. Draw its projection of pyramid if the axis is inclined at 45° to the H.P. and parallel to the V.P.

Solution

Refer figure 10.27 (a) and (b).

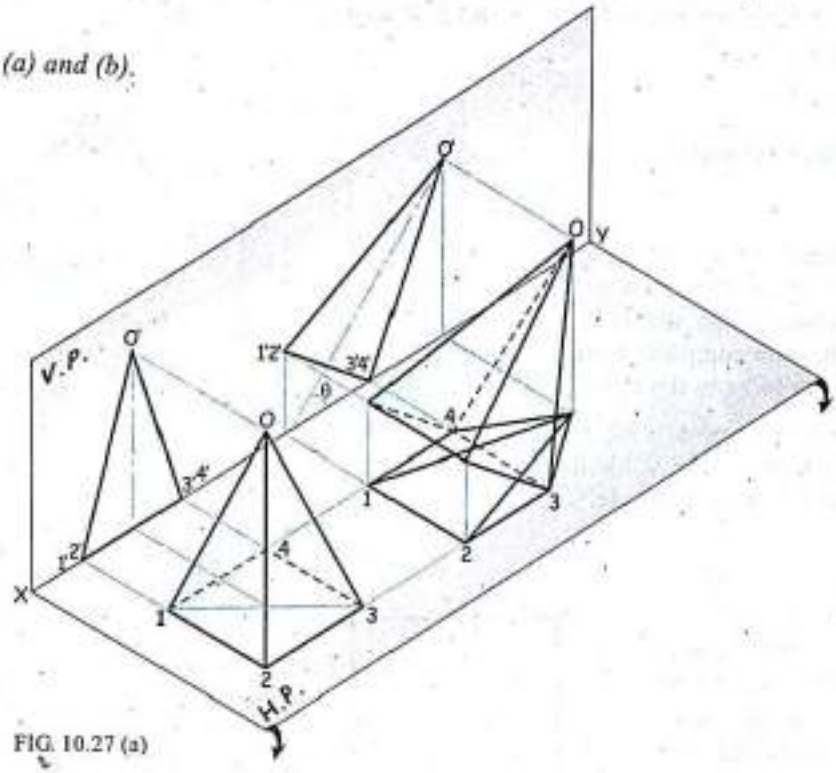

FIG. 10.27 (a)

Stage I

1. When the axis of a solid is inclined to the H.P. and one of the side of base is in the H.P., assume that the complete base of a solid to be resting in the H.P. such that the side of a base is perpendicular to the *XY* line.
2. Draw the true shape of the base in the T.V. and project its F.V. with the given axis length.

Stage II

3. Redraw the F.V. of a solid as per the given inclination of an axis at an angle $\theta = 45^0$ with the *XY* line.
4. Project the points from the F.V. vertically down and project the points from T.V. of the Ist stage horizontally right to get the corresponding points of the T.V. as a final projection.

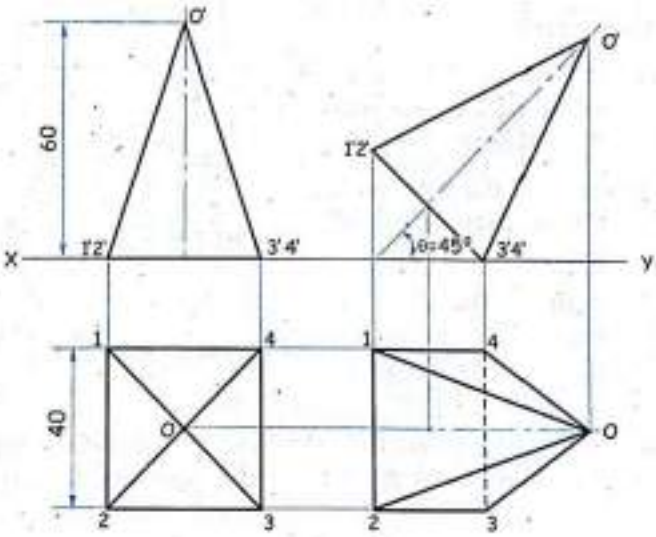

FIG. 10.27 (b)

5. Join the points in a proper sequence with care of *visibility and non-visibility.*

Scanned by CamScanner

Problem 11

A right circular cylinder of base diameter 40 mm, axis length 60 mm has a point of base circle on the H.P. with the axis making an angle 45^0 with the H.P. and parallel to the V.P.

Solution

Refer figure 10.28 (a) and (b).

Stage I

1. When the axis of a cylinder is inclined to the H.P. and a point of base circle is on the H.P., assume that the complete base of a cylinder to be in the H.P.
2. Draw the true shape of a base, i.e. circle in the T.V. and project its F.V. as a rectangle.

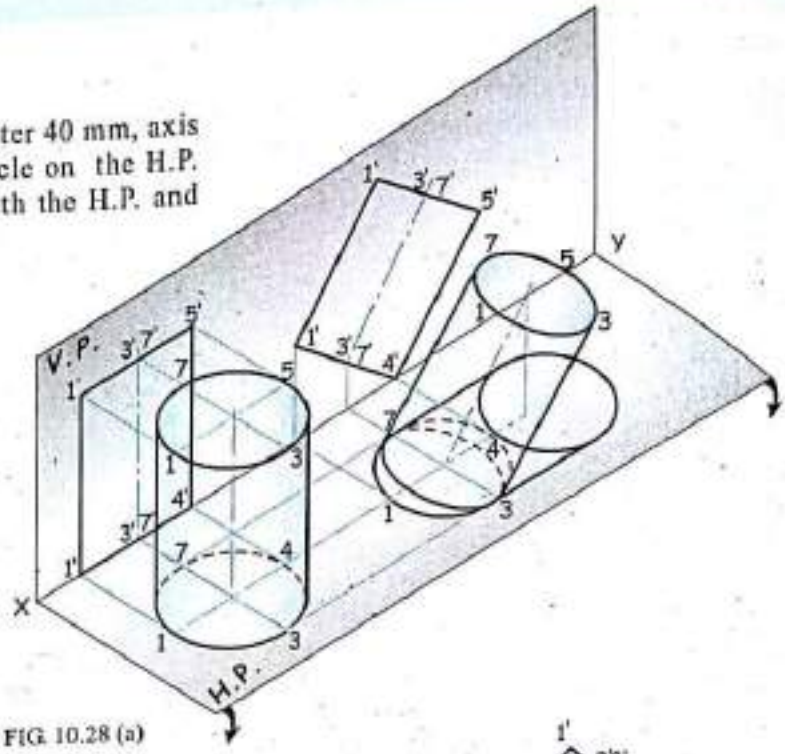

FIG. 10.28 (a)

Stage II

3. Redraw the F.V. as per the given inclination of an axis at an angle $\theta = 45^0$ with the XY line.
4. Project the T.V.

Construction

1. Draw the T.V. as a circle and divide into 8 equal parts.
2. Project the F.V. with the construction of generators.
3. Redraw the F.V. in stage IInd with the axis making an angle 45^0 to the XY line.

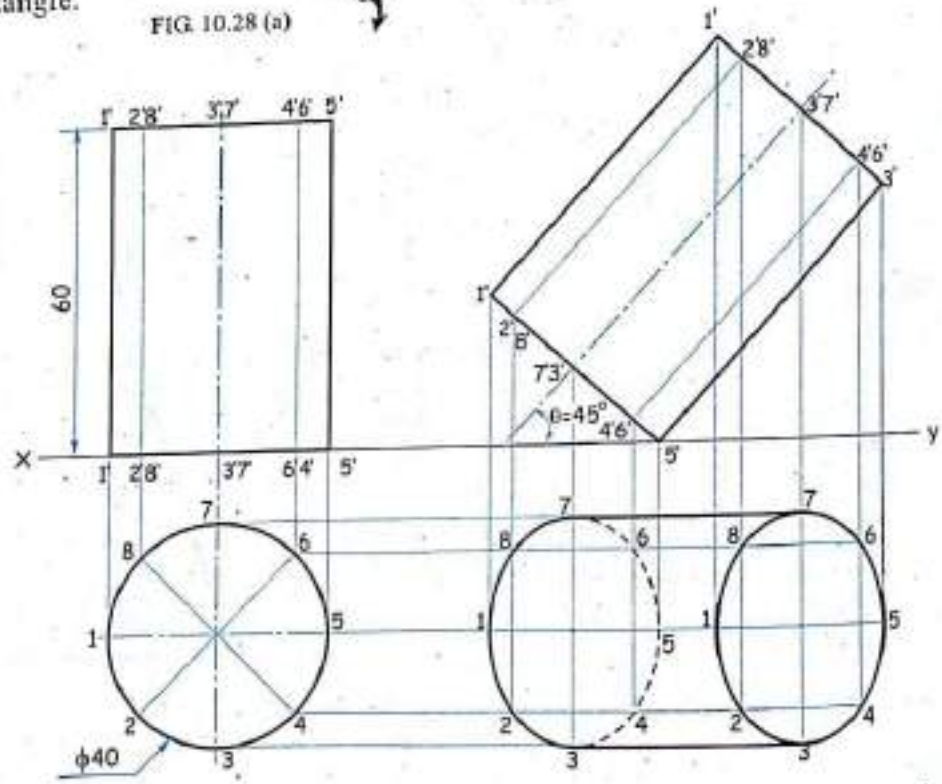

FIG. 10.28 (b)

4. Project the points from the bottom base and the top base of the F.V. vertically down and project the points from the T.V. of I^{st} stage horizontally towards the right to get the corresponding points of T.V.
5. Here, the top base is nearer to the observer, hence draw the curve fully visible. The bottom base is away from the observer, hence draw the curve portion which falls within outline of the view by the hidden dotted line.

Scanned by CamScanner

Problem 12

A square pyramid of 40 mm edge of base and 60 mm axis length is resting on one of its triangular face on the H.P. Draw the projection of the pyramid when edge of base contained by the triangular face is perpendicular to the V.P.

Solution

Refer figure 10.29 (a) and (b).

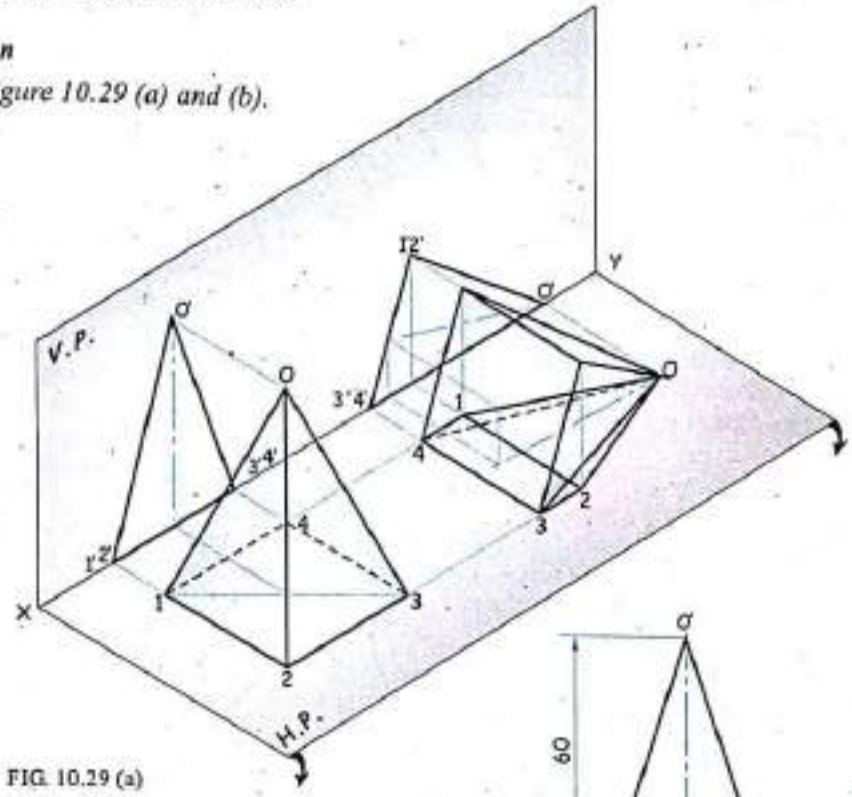

FIG. 10.29 (a)

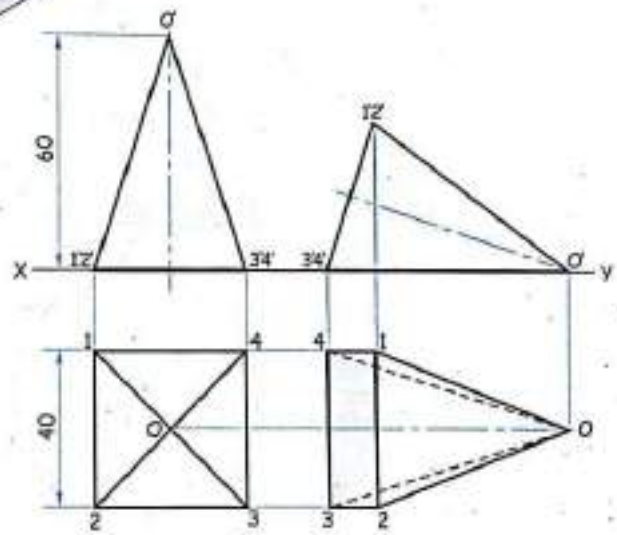

FIG. 10.29 (b)

Stage I

1. Since one of the triangular face of pyramid is in the H.P., assume that the base of pyramid be resting on the H.P.
2. Draw the true shape of base as a square in T.V. with one of the edge of base perpendicular to *XY* line and project the F.V. by usual method.

Note : *The triangular face contained by the edge of base which is in the H.P. appears as a straight line (Line view) in F.V. (i.e. O'-3'-4')*

Stage II

3. Redraw the F.V. such that the triangular face which appears as a line view, by complete tilting can be kept on *XY* line.
4. Project the T.V. with care of visibility and non-visibility.

Note : *Here the base of a square pyramid is completely visible to the observer and triangular face which is resting on the H.P. is not visible to the observer.*

Scanned by CamScanner

Problem 13

A cone, diameter of base 40 mm, axis height 50 mm has one of its generator in the H.P. and axis parallel to the V.P. Draw its projections.

Solution

Refer figure 10.30 (a) and (b).

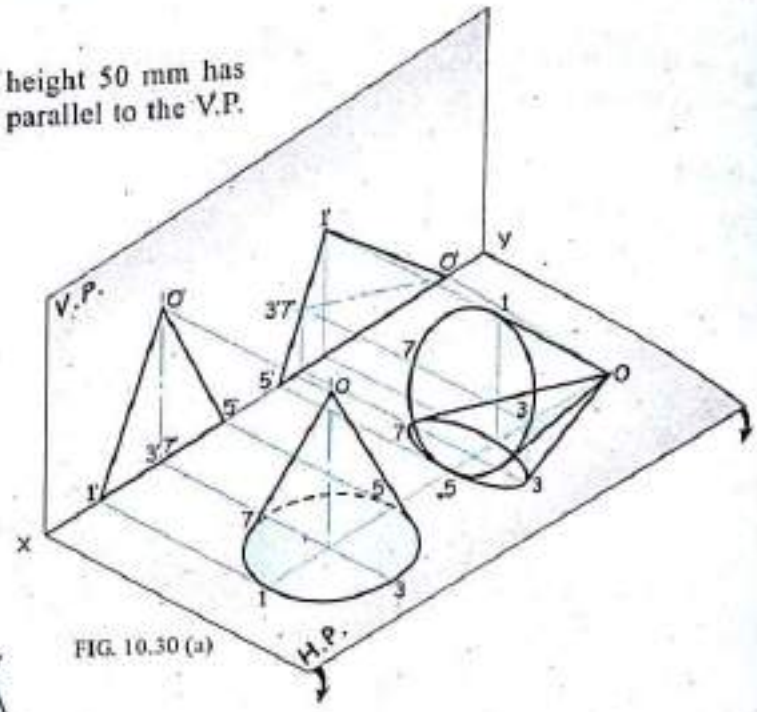

FIG. 10.30 (a)

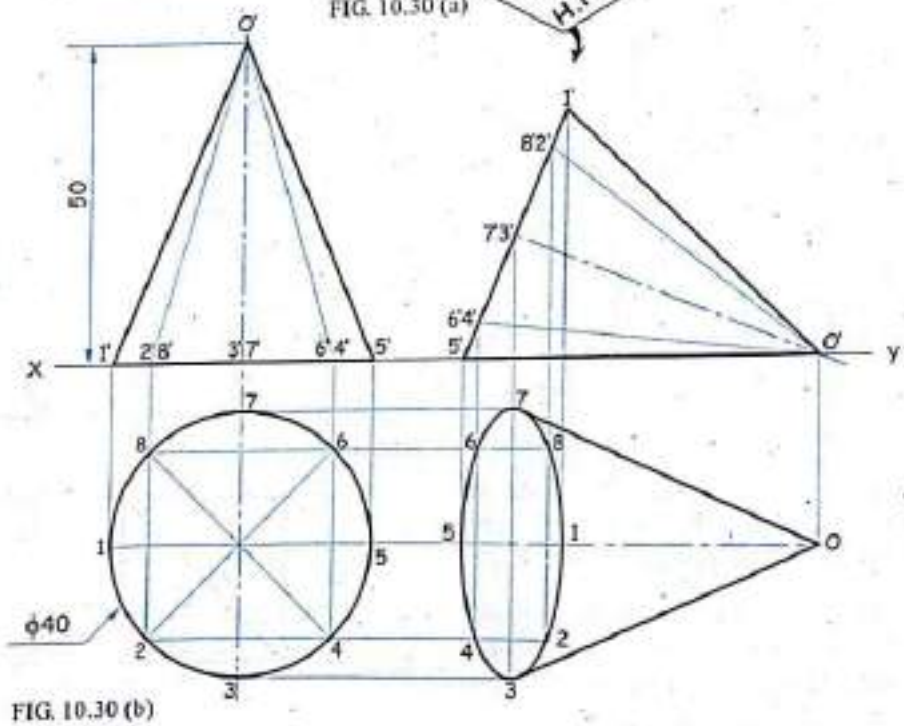

FIG. 10.30 (b)

Stage I

1. Since one of the generator of a cone is in the H.P., assume the base of a cone be resting on the H.P. Draw the T.V. and project the F.V. with the construction of a generator by usual method.

Stage II

2. Redraw the F.V. such that the true length of a generator of the F.V. (*O'*-5'), which is a straight line, can be kept on the *XY* line by tilting.
3. Project the T.V. with *care of visibility.*

Note : *Here the base of the cone is completely visible to the observer.*

Scanned by CamScanner

Problem 14

A regular pentagonal prism, side of base 30 mm and axis height 60 mm rests on one of the corner of its base on the H.P. and an axis makes an angle of 40° with the H.P. Draw its projection when the side of a base opposite to the corner which is in the H.P. remains parallel to the H.P. and perpendicular to the V.P.

OR

A right pentagonal prism, edge of base 30 mm and axis length 60 mm is standing on one of its corner of the base on the H.P. with longer edge containing that corner inclined at 40° to the H.P. and parallel to the V.P. Draw its projections.

OR

A pentagonal prism with 30 mm edge of base and 60 mm length of an axis is having one of the corner of the base in the H.P. and the base of a prism makes an angle of 50° with the H.P. Draw the projection of a prism when the two base edges passing through the corner on which it rests, makes an equal inclination with the H.P.

OR

A pentagonal prism with the side of base 30 mm, axis length 60 mm has one of its corner of the base in the H.P. such that the rectangular face opposite to this corner makes an angle 40° with the H.P. and perpendicular to the V.P. Draw the projections.

Solution

Refer figure 10.31.

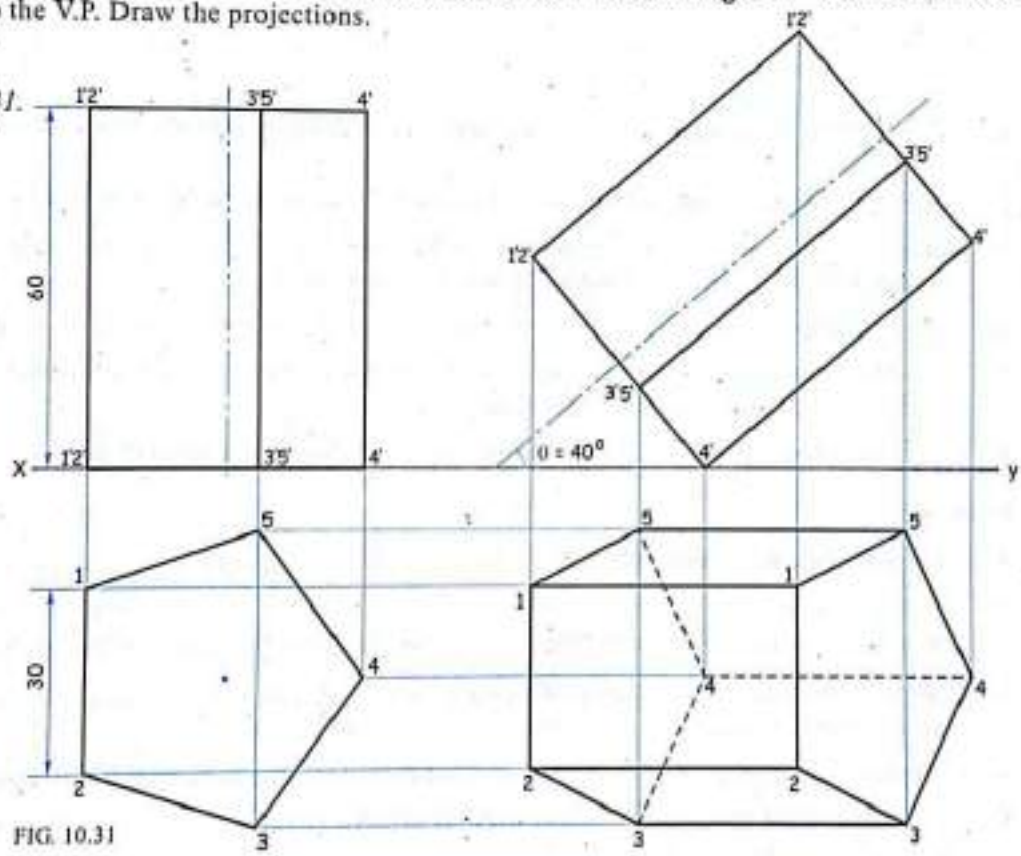

FIG. 10.31

Stage I

1. When the axis of a prism is directly or indirectly inclined to the H.P. and one of the corner of the base is in the H.P., assume that the complete base of a prism in the H.P.
2. Draw the true shape of a base, i.e. pentagon in the T.V. such that the line joining a centre of a base and the corner on which it is resting should be a parallel line to the *XY* line and project its F.V. with the given axis length.

Note : *Place the corner on the right side so that the general practice for tilting the solid towards the right side gets satisfied.*

Scanned by CamScanner

Stage II

3. Redraw the F.V. of a solid as per the given inclination of an axis (directly/ indirectly) at an angle θ with the *XY* line.
4. Project the T.V. with *care of visibility and non-visibility.*

Conclusion

When the axis of a solid is directly /indirectly inclined to the H.P. at an angle θ and parallel to the V.P., the projection of a solid is obtained in two stages.

Stage I - Depending upon the resting condition, assume the base of a solid is on the H.P. and hence the axis is perpendicular to the H.P. Start with the T.V. and project the F.V.

Stage II -Redraw the F.V. as per the given resting condition so that the axis is directly/ indirectly inclined to H.P. and parallel to the V.P. Project the T.V. with *care of visibility.*

Note : *1. F.V. of an axis is a true length (T.L.) and shows an inclination with the XY line.*
2. T.V. of an axis is parallel to the XY line and shows the plan length (P.L.).

How to Draw the Final Projection with Care of Visibility and Non-visibility for Prism and Pyramid

Prism

1. After locating the points, select the corners which is farthest to the observer (nearest to the *XY* line)
2. Since every corner is formed by three edges initially draw these edges by hidden dotted lines.
3. Complete the line joining cycle of bottom base (*1-2, 2-3, . . .*) and top base (*1-2, 2-3, . . .*) without disturbing the initial hidden dotted lines drawn.
4. Draw the longer edges (*1-1, 2-2, . . .*) without disturbing the initial hidden dotted lines drawn.
5. Since the outline (boundary) of any view is always visible, convert the hidden dotted line into full line (object line) lying on the outline.
6. Retain the hidden dotted lines if it lies within the outline (boundary) of view.

Pyramid

1. After locating the points select the corner which is farthest to the observer (nearest to the *XY* line).
2. Since every corner is formed by three edges, initially draw these three edges by hidden dotted line.
3. Complete the line joining cycle of bottom base (*1-2, 2-3, . . .*) without disturbing the initial hidden dotted lines drawn.
4. Draw the slant edges (*O-1, O-2, . . .*) without disturbing the initial hidden dotted lines drawn.
5. Since the outline (boundary) of any view is always visible, convert the hidden dotted line into full line (object line) lying on the outline.
6. Retain the hidden dotted lines if it lies within the outline (boundary) of view.

Hint : *In the final projection :*

1. Two hidden dotted lines will never cross each other.
2. Two visible lines will never cross each other.

Note : *The above two conditions are applicable only for solids and not for the hollow solids.*

Scanned by CamScanner

10.5 Axis of Solid is Directly/ Indirectly Inclined to the V.P. At an Angle ϕ and Parallel to the H.P.

Problem 15

A square prism, side of base 40 mm and axis height 60 mm has one of the corner of base in the V.P. The axis of a prism is inclined to the V.P. at 30° and parallel to the H.P. Draw its projections.

Solution

Refer figure 10.32.

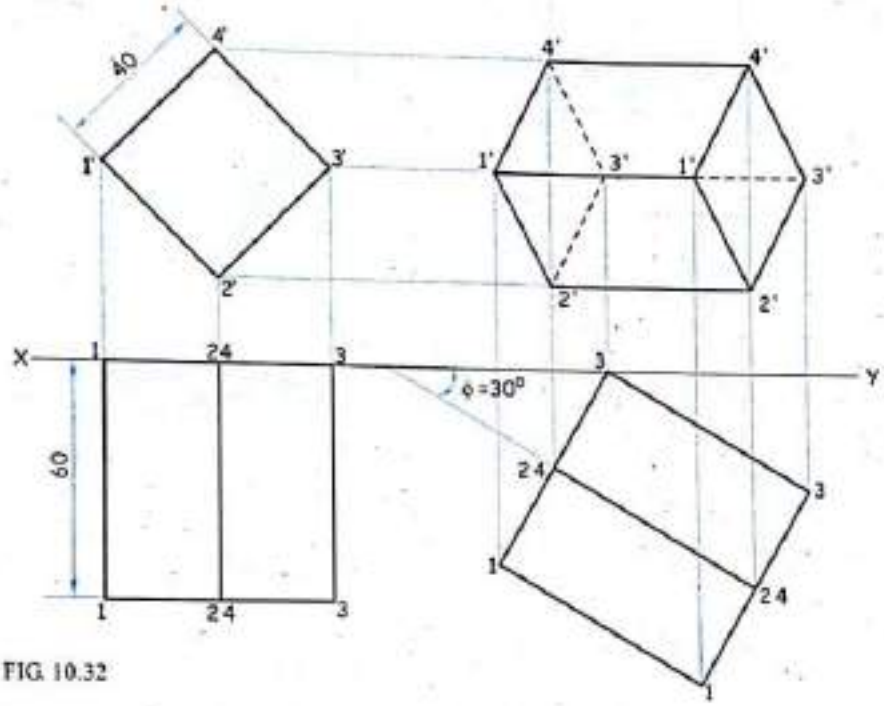

FIG. 10.32

Stage I

1. When the axis of a prism is inclined to the V.P. and one of the corner of base is in the V.P., assume that the complete base of a prism in the V.P.
2. Draw the true shape of a base as a square in the F.V. such that the centre of a base and a corner on which it is resting should pass through the line parallel to the *XY* line and project its T.V. with the given axis length.

Stage II

3. Redraw the T.V. of a prism as per the given inclination of an axis at an angle $\phi = 30°$ with the *XY* line.
4. Project the points from the T.V. vertically up and project the points from the F.V. of the Ist stage horizontally right to get the corresponding points of the F.V. as a final projection.
5. Join the points in a proper sequence with *care of visibility* and *non-visibility*.

Scanned by CamScanner

Problem 16

A square pyramid, edge of base 40 mm and axis length 60 mm has one of the edge of base in the V.P. Draw the projection of a pyramid if axis is inclined at 30° to the V.P. and parallel to the H.P.

Solution

Refer figure 10.33.

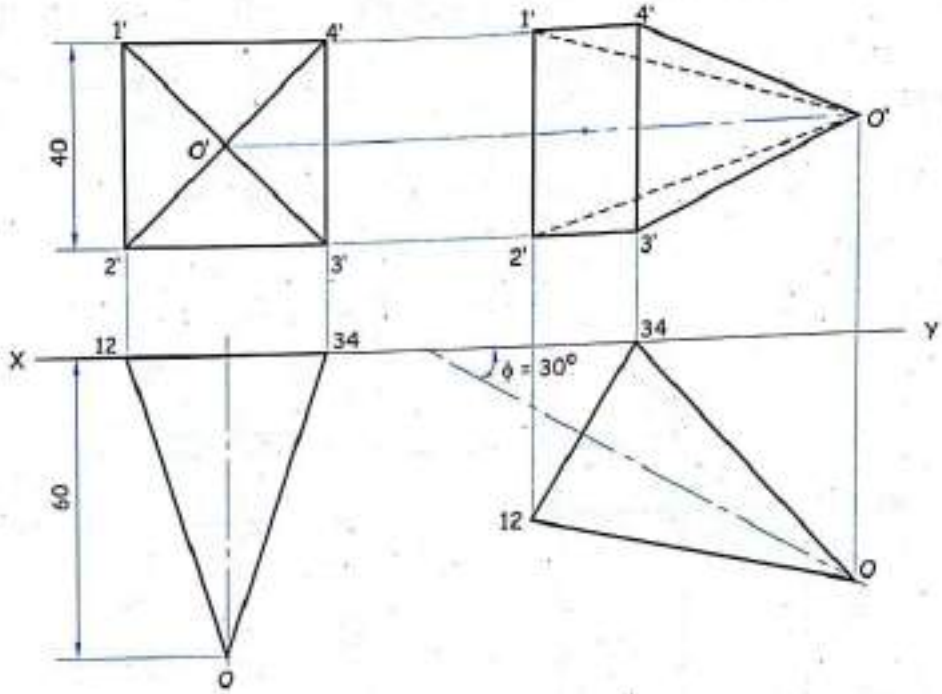

FIG. 10.33

Stage I

1. When the axis of prism is inclined to the V.P. and one of the side of base is in the V.P., assume that the complete base of a prism to be resting in the V.P. such that edge of base is perpendicular to the *XY* line.
2. Draw the true shape of a base in F.V. and project its T.V. with the given axis length.

Stage II

3. Redraw the T.V. of a prism as per the given inclination of an axis at an angle $\phi = 30°$ with the *XY* line.
4. Project the F.V. with *care of visibility* and *non-visibility* by usual method.

Scanned by CamScanner

Problem 17

A square pyramid of 40 mm edge of base and 60 mm axis length is resting on one of its triangular face in the V.P. Draw the projector of a pyramid if the axis is parallel to the H.P.

Solution

Refer figure 10.34.

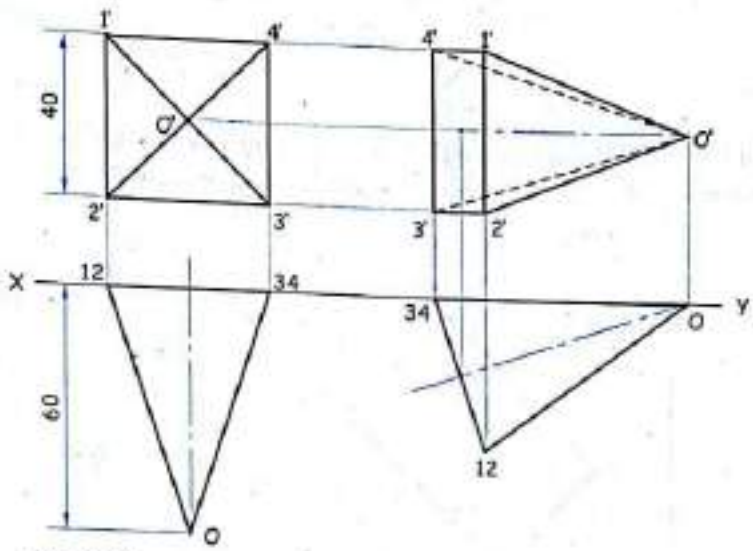

FIG. 10.34

Stage I

1. Since one of the triangular face of a pyramid is in the V.P., assume that the base of a pyramid be resting in the V.P.
2. Draw the true shape of a base in the F.V. with one of the edge of base perpendicular to the *XY* line and project the T.V. by usual method.

Note : *The triangular face contained by the edge of base which is in the V.P. appears as a straight line (line view) in the T.V., i.e. line view 0-3-4.*

Stage II

3. Redraw the T.V. such that the triangular face which appears as a straight line view by complete tilting can be kept on the *XY* line.
4. Project the F.V. with *care of visibility* and *non-visibility* by usual method.

   Here, the base of a square pyramid is completely visible to the observer and triangular face which is resting in the V.P. is not visible to the observer.

Conclusion

When the axis of a solid is parallel to the H.P. and directly / indirectly inclined to the V.P., at angle ϕ, the projection of the a solid is obtained in two stages.

Stage I - Depending upon the resting condition of a solid, assume base of a solid on is the V.P. and hence the axis is perpendicular to the V.P. Start with the F.V. and project the T.V.

Stage II - Redraw the T.V. as per the given resting condition so that the axis is directly/ indirectly inclined to the V.P. and parallel to the H.P. Project the F.V. with *care of visibility.*

Note : *1. T.V. of an axis is of the true length (T.L.) and shows an inclination with the XY line.*

2. F.V. of an axis is parallel to the XY line and shows an elevation length (E.L.)

Scanned by CamScanner

10.6 Oblique

The Axis of Solid is Inclined to All the Three Principal Planes

10.6.1 Solid Resting on One of its Side of Base on the H.P. which is Inclined to the V.P. and the Axis of a Solid is Directly or Indirectly Inclined to the H.P.

Problem 18

A square prism, side of base 40 mm and axis length 60 mm has one of the side of base in the H.P., which makes an angle 30° (ϕ) with the V.P. and axis inclined at an angle 45° (θ) with the H.P. Draw its projections.

Solution

Refer figure 10.35 (a).

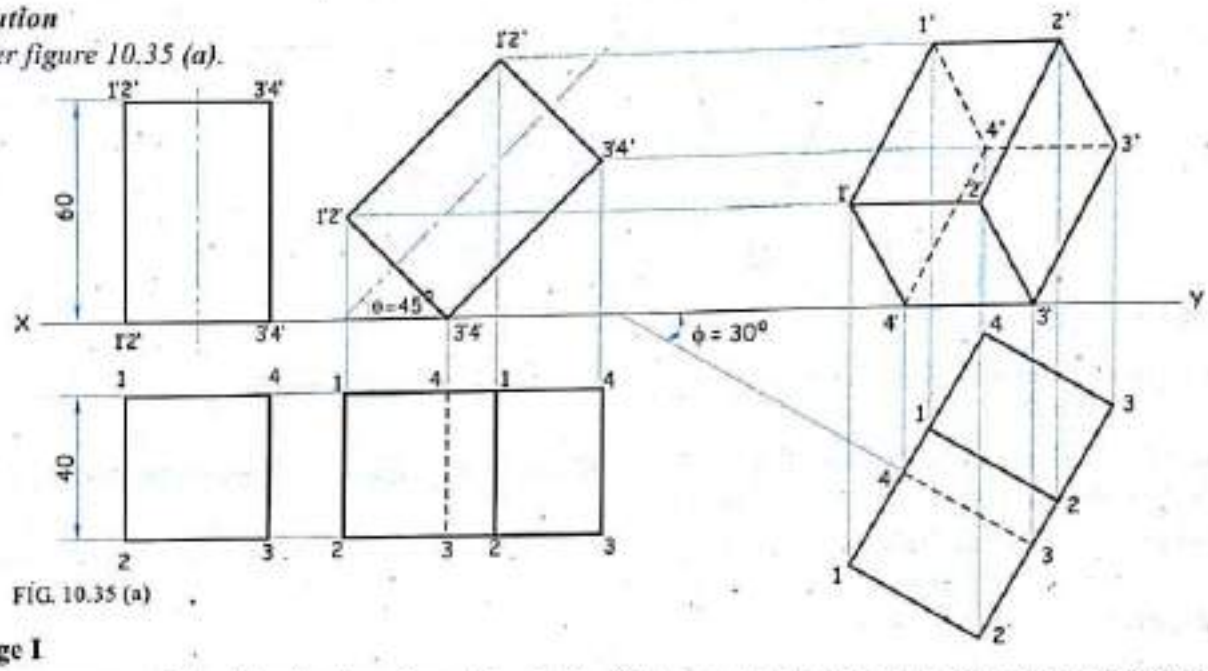

FIG. 10.35 (a)

Stage I

1. When one of the side of a base is resting in the H.P., assume that the complete base of solid be in the H.P. such that the side of base (say 3-4) is perpendicular to the *XY* line.
2. Draw the true shape of a base in the T.V. and project its F.V. with the given axis length.

Stage II

3. Redraw the F.V. of the Ist stage as per the given inclination of an axis at an angle θ = 45° with the *XY* line. (i.e. inclination with the H.P.)
4. Project the points from the F.V. vertically down and project the points from the T.V. of the Ist stage horizontally towards the right to get the corresponding points of the T.V. of stage IInd.
5. Join the points in a proper sequence with *care of visibility* and *non-visibility*.

Stage III

6. Redraw the T.V. of stage IInd such that the side of a base (3-4) which is the H.P. makes an angle ϕ = 30° with the *XY* line. (i.e. inclination with the V.P.)
7. Project the points from the T.V. vertically up and project the points from the F.V. of stage II horizontally towards the right to get the corresponding points of the F.V. of stage III.
8. Join the points in a proper sequence with *care of visibility* and *non-visibility* to draw the T.V. of stage III.

Scanned by CamScanner

Solution of Problem 18 by Auxiliary Plane Method

Refer figure 10.35 (b).

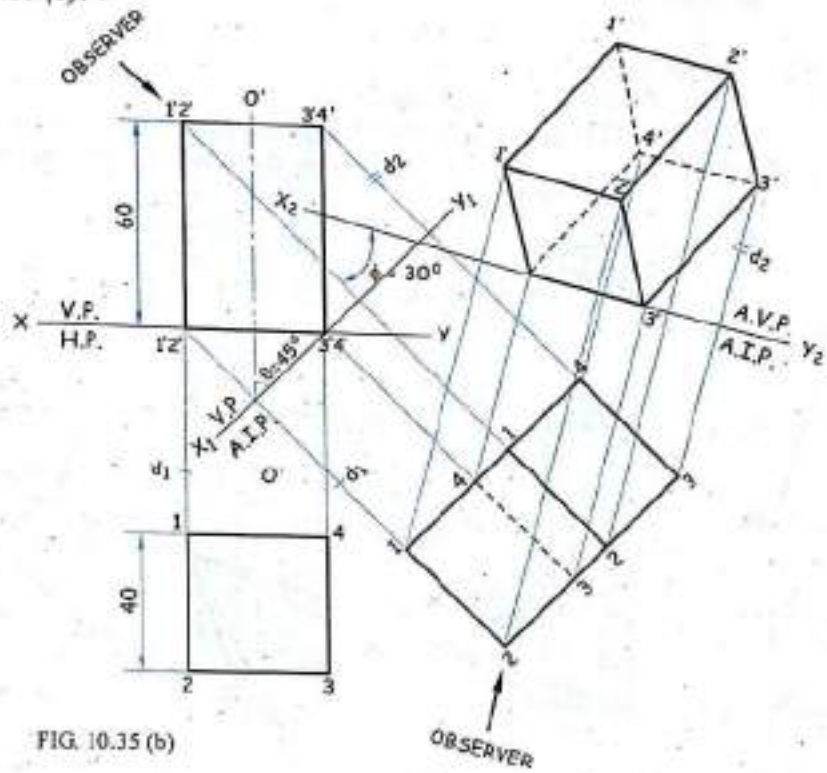

FIG. 10.35 (b)

Stage I

1. When one of the side of a base is resting in the H.P., assume that the complete base of solid be in the H.P. such that the side of base (say 3-4) is perpendicular to the *XY* line.
2. Draw the true shape of a base in the T.V. and project its F.V. with the given axis length.

Stage II

3. Since the prism has to be placed on the base edge *3'-4'* such that the axis is inclined at $\theta = 45°$ to the *XY* line, draw a new X_1Y_1 line inclined at $\theta = 45°$ to the axis *O'O'* as shown.
4. Draw the projectors through all the corners perpendicular to the X_1Y_1 line.
5. On these projectors measure the distances of each corner in the first top view from the X_1Y_1 line, equal to the distance of the corresponding corners in the first top from the *XY* line and complete the auxiliary top view as shown.

Stage III

6. Since the base edge *3-4* has to be inclined at $\phi = 30°$ to the V.P. draw the new reference line X_2Y_2 in the auxiliary top view inclined at 30° to the edge *3-4* at any convenient distance from it.
7. Draw the projectors through all the corners in the auxiliary top view, perpendicular to the X_2Y_2 line.
8. On these projector lines measure the distance of each corner in the auxiliary front view from the X_2Y_2 line equal to the distances of each corresponding corner in the first view from X_1Y_1 line and complete the auxiliary front view as shown.

Note : *Since the concept of auxiliary projection is unusual, students are advised to solve the problem by usual three stage method.*

Scanned by CamScanner

10.6.2 Axis of the Solid is Directly or Indirectly Inclined to the H.P. and T.V. of the Axis is Inclined to the V.P.

Problem 19

A square pyramid side of base 40 mm and axis length 60 mm has one of the side of base in the H.P. The axis of solid is inclined to the H.P. at an angle 30° (θ) and the T.V. of axis is inclined at an angle 45° with the V.P. Draw its projections. (i) Apex away from the observer. (ii) Apex nearer to the observer.

Solution

Refer figure 10.36.

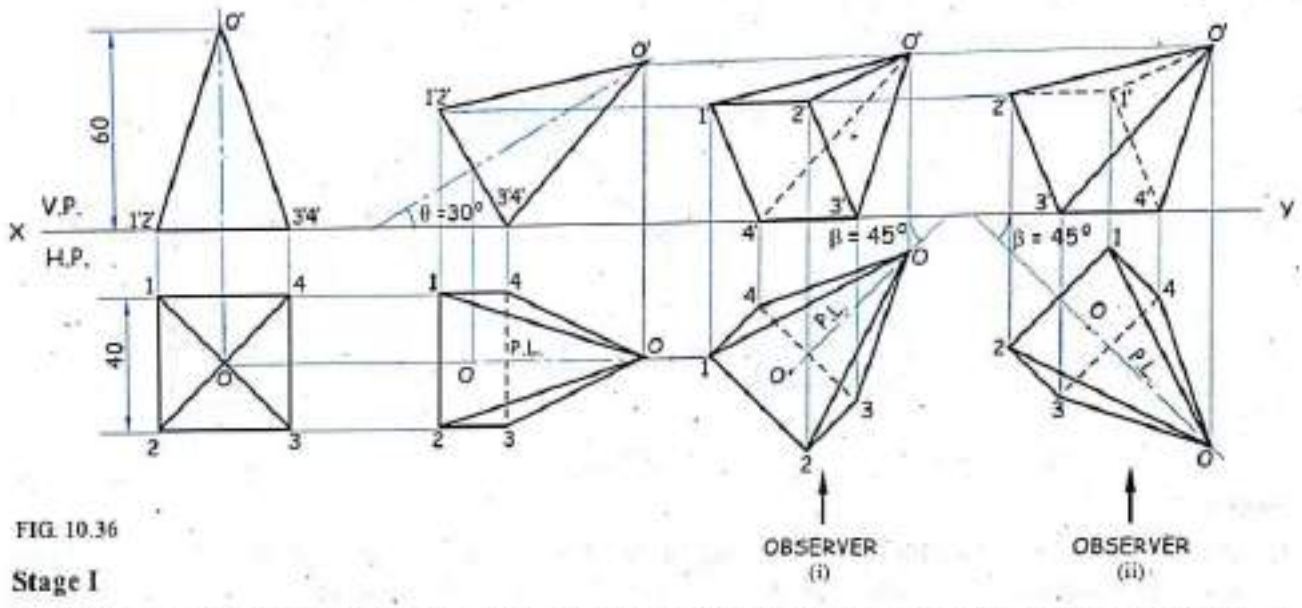

FIG. 10.36

Stage I

1. When one of the side of a base is resting in the H.P., assume that the complete base of a solid be in the H.P. such that the side of a base (say 3-4) is perpendicular to the *XY* line.
2. Draw the true shape of a base in the T.V. and project its F.V. with the given axis length.

Stage II

3. Redraw the F.V. of stage Ist as per the given inclination of an axis at an angle θ = 30° with the *XY* line. (i.e. inclination with the H.P.)
4. Project the points from the F.V. vertically down and project the points from the T.V. of stage I horizontally towards the right to get the corresponding points of the T.V. of stage IInd.
5. Join the points in a proper sequence with *care of visibility* and *non-visibility*.

Stage III

6. Redraw the T.V. of stage IInd such that the T.V. (P.L.) of an axis of a solid (i.e. *OO*) is inclined at an angle β = 45° with the *XY* line.
7. Project the points from the T.V. vertically up and project the points from the F.V. of stage IInd horizontally towards the right to get the corresponding points of the F.V. of stage IIIrd.
8. Join the points in a proper sequence with *care of visibility* and *non-visibility* to draw the T.V. of stage IIIrd.

Scanned by CamScanner

Problem 20

A square prism side of base 40 mm and axis length 60 mm has one of the side of base on the ground. The axis of solid is inclined to the *Ground (H.P.)* at an angle 30° (θ) and T.V. of axis is inclined at an angle 45° with the V.P. Draw its projection. (i) Apex away from the observer. (ii) Apex nearer to the observer. ***By third angle method of projection.***

Solution

Refer figure 10.37.

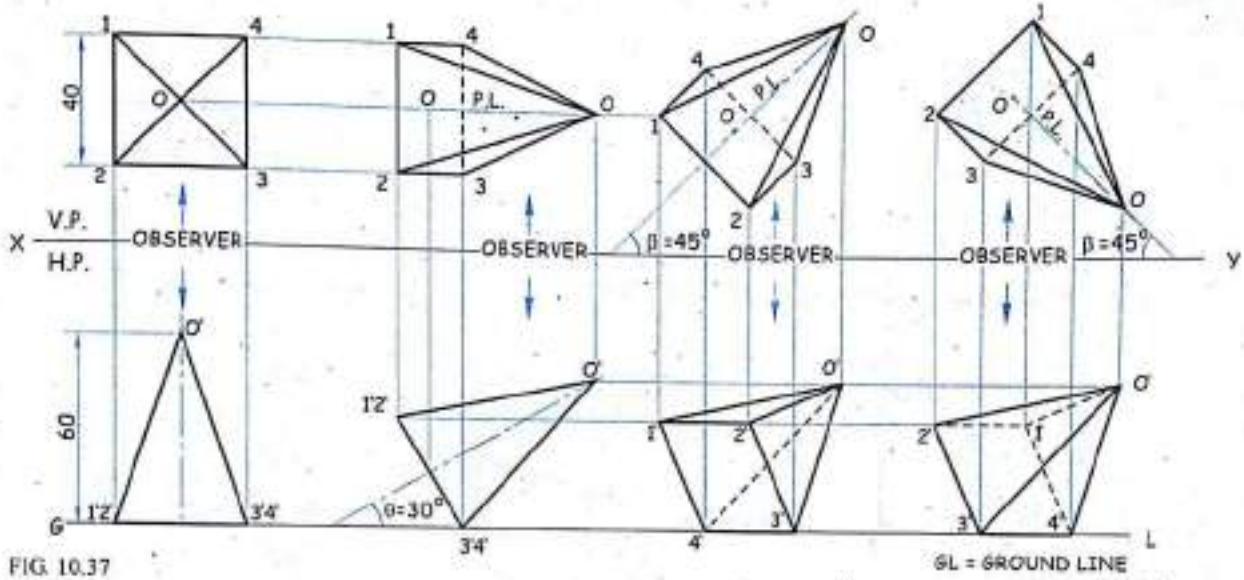

FIG. 10.37

Stage I

1. When one of the side of a base is resting on the Ground (H.P.), assume that the complete base of a solid be on the Ground (H.P.) such that the side of a base (say 3-4) is perpendicular to the *XY*
2. Draw the true shape of a base in the T.V. and project its F.V. with the given axis length.
   Here Ground is represented by GROUND LINE (GL)

Stage II

3. Redraw the F.V. of stage Ist as per the given inclination of an axis at an angle θ = 30° with the *GL* line. (i.e. inclination with the H.P.)
4. Project the points from the F.V. vertically up and project the points from the T.V. of stage I horizontally towards the right to get the corresponding points of the T.V. of stage IInd.
5. Join the points in a proper sequence with *care of visibility* and *non-visibility*.

Stage III

6. Redraw the T.V. of stage IInd such that the T.V. (P.L.) of an axis of a solid (i.e. *OO*) is inclined at an angle β = 45° with the *XY* line. (i.e. inclination with the V.P.)
7. Project the points from the T.V. vertically down and project the points from the F.V. of stage IInd horizontally towards the right to get the corresponding points of the F.V. of stage IIIrd.
8. Join the points in a proper sequence with *care of visibility* and *non-visibility* to draw the T.V. of stage IIIrd.

Note : *1. In first angle method of projection GROUND is considered as H.P.*
2. In third angle method of projection GROUND is a plane parallel to H.P.

Scanned by CamScanner

10.6.3 Axis of the Solid is Directly or Indirectly Inclined to the H.P. and Axis is Inclined to the V.P.

Problem 21

A square pyramid side of base 40 mm, axis length 60 mm has one of the side of base in the H.P. The axis of a solid is inclined to the H.P. and the V.P. at an angle 30° (θ) and 45° (ϕ) respectively. Draw its projections.

Solution

Refer figure 10.38.

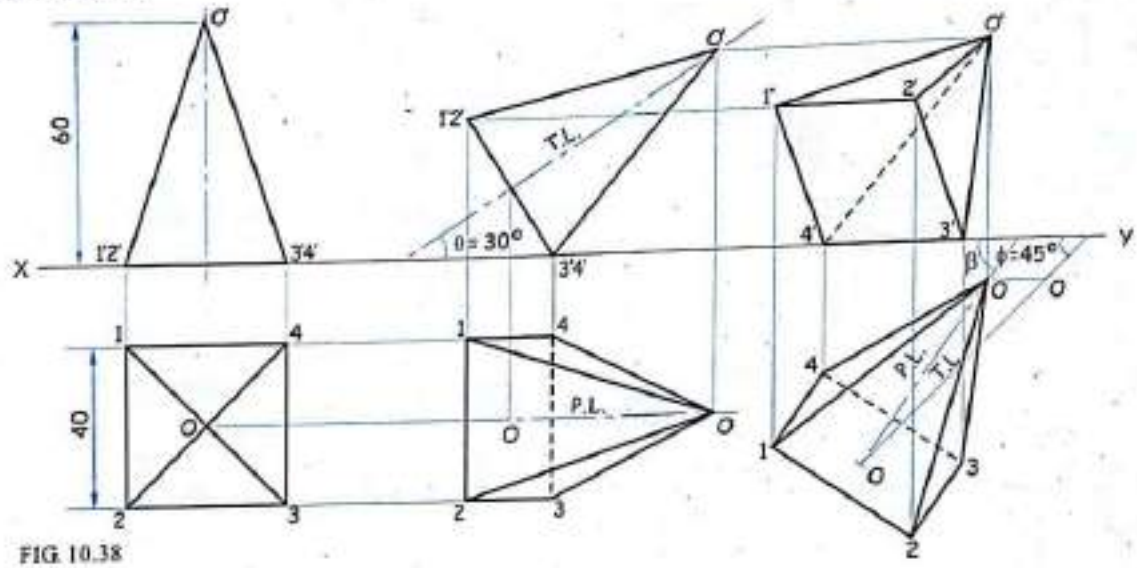

FIG. 10.38

Stage I

1. When one of the side of a base is resting in the H.P., assume that the complete base of a solid to be in the H.P. such that the side of a base (say 3-4) is perpendicular to the *XY* line.
2. Draw the true shape of a base in the T.V. and project its F.V. with given axis length.

Stage II

3. Redraw the F.V. of stage Ist as per the given inclination of an axis at an angle θ = 30° with the *XY* line. (i.e. inclination with the H.P.)
4. Project the points from the F.V. vertically down and project the points from the T.V. of stage Ist horizontally towards the right to get the corresponding points of the T.V. of stage IInd.
5. Join the points in a proper sequence with *care of visibility* and *non-visibility*.

Stage III

6. Draw a line inclined at an angle ϕ = 45° with the *XY* line and cut on it the T.L. of the axis.
7. Draw a locus line from any one end point parallel to the *XY* line. Taking the plan length (P.L.) of an axis from stage IInd and keeping at other end point as a centre, cut an arc on the locus line. This gives apperent angle β with the *XY* line.
8. Redraw the T.V. of stage IInd on a line, which makes an angle β with *XY* fixing P.L. of an axis.
9. Project the points from the T.V. vertically up and project the points from the F.V. of stage IInd horizontally towards the right to get the corresponding points of the F.V. and draw the final projection with *care of visibility* and *non-visibility*.

Scanned by CamScanner

10.6.4 Solid Resting on One of its Side of Base on the V.P. which is Inclined to the H.P. and the Axis of the Solid is Directly or Indirectly Inclined to the V.P.

Problem 22

A square prism with side of base 40 mm and axis length 60 mm has one of its side of base in the V.P., which makes an angle 45° (θ) with the H.P. and axis inclined at an angle 30° (ϕ) with the V.P. Draw its projections.

Solution

Refer figure 10.39.

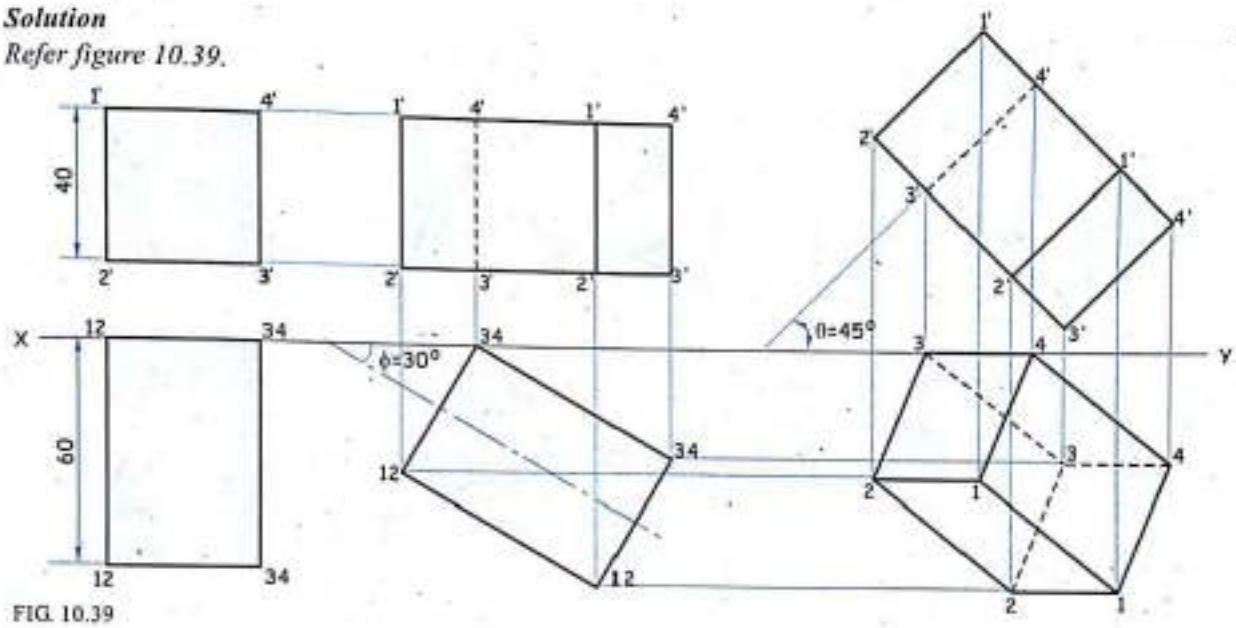

FIG. 10.39

Stage I

1. When one of the side of a base is resting in the V.P., assume that the complete base of a solid to be in the V.P. such that the side of a base (say 3'-4') is perpendicular to the *XY* line.
2. Draw the true shape of a base in F.V. and project its T.V. with the given axis length.

Stage II

3. Redraw the T.V. of stage Ist as per the given inclination of an axis at an angle ϕ = 30° with the *XY* line. (i.e. inclination with the V.P.)
4. Project the points from the T.V. vertically up and project the points from the F.V. of stage Ist horizontally towards the right to get the corresponding points of the F.V. of stage IInd.
5. Join the points in a proper sequence with *care of visibility* and *non-visibility*.

Stage III

6. Redraw the F.V. of stage IInd such that the side of a base (3'-4') which is the V.P. makes an angle θ = 45° with the *XY* line. (i.e. inclination with the H.P.)
7. Project the points from the F.V. vertically down and project the points from the T.V. of stage IInd horizontally towards the right to get the corresponding points of the T.V. of stage IIIrd.
8. Join the points in a proper sequence with *care of visibility* and *non-visibility* to draw the F.V. of stage IIIrd.

Scanned by CamScanner

10.6.5 Axis of the Solid is Directly or Indirectly Inclined to the V.P. and F.V. of the Axis is Inclined to the H.P.

Problem 23

A square Pyramid side of base 40 mm and axis length 60 mm has one of the side of base in the V.P. The axis of the solid is inclined to the V.P. at an angle 30° (ϕ) and the F.V. of axis is inclined at an angle 45° with the H.P. Draw its projections, (i) Apex away from the observer, (ii) Apex nearer to the observer.

Solution

Refer figure 10.40.

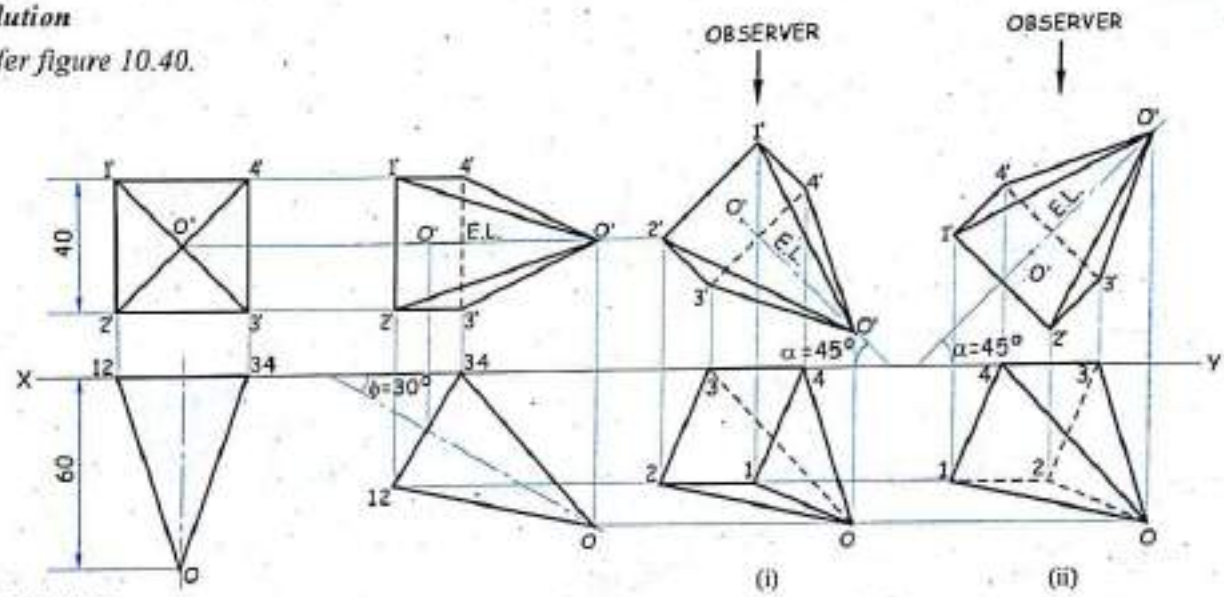

FIG. 10.40

Stage I

1. When one of the side of a base is resting in the V.P., assume that the complete base of a solid in the V.P. such that the side of a base (say 3'-4') is perpendicular to the *XY* line.
2. Draw the true shape of a base in F.V. and project its T.V. with the given axis length.

Stage II

3. Redraw the T.V. of stage Ist as per the given inclination of an axis at an angle $\phi = 30°$ with the *XY* line. (i.e. inclination with the V.P.)
4. Project the points from the T.V. vertically up and project the points from the F.V. of stage Ist horizontally towards the right to get the corresponding points of the F.V. of stage IInd.
5. Join the points in a proper sequence with *care of visibility* and *non-visibility*.

Stage III

6. Redraw the F.V. of stage II such that the F.V. (E.L.) of an axis of a solid is inclined at an angle $\alpha = 45°$ with the *XY* line.
7. Project the points from the F.V. vertically down and project the points from the T.V. of stage IInd horizontally towards the right to get the corresponding points of the T.V. of stage IIIrd.
8. Join the points in a proper sequence with *care of visibility* and *non-visibility* to draw the T.V. of stage IIIrd.

Scanned by CamScanner

10.6.6 Axis of the Solid is Directly or Indirectly Inclined to the V.P. and Axis is Inclined to the H.P.

Problem 24

A square pyramid side of base 40 mm, axis length 60 mm has one of the side of base in the V.P. The axis of a solid is inclined to the V.P. and the H.P. at an angle 30° (ϕ) and 45° (θ) respectively. Draw its projections.

Solution

Refer figure 10.41.

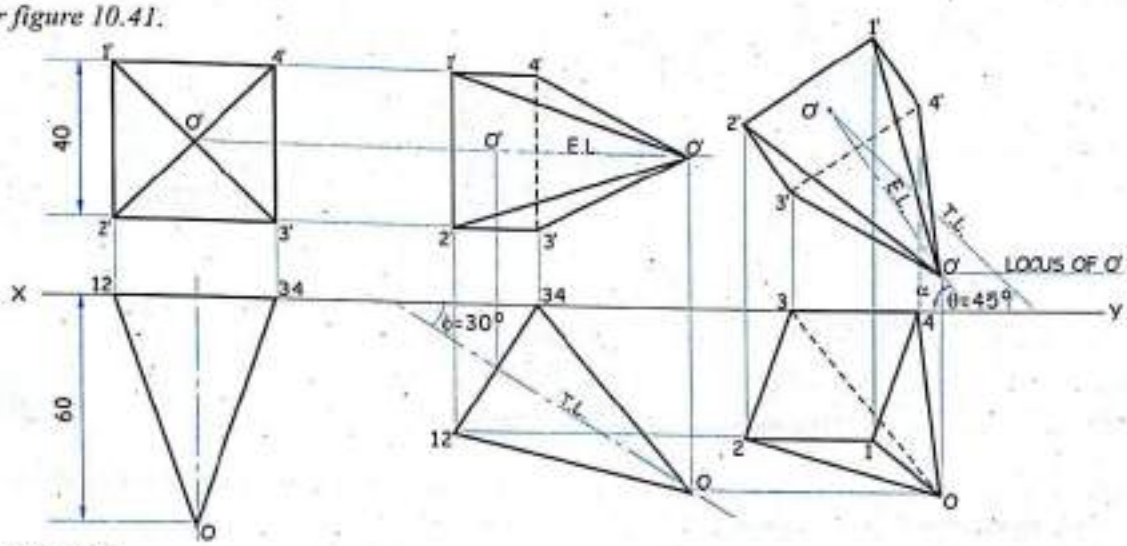

FIG. 10.41

Stage I

1. When one of the side of a base is resting in the V.P., assume that the complete base of a solid to be in the V.P. such that the side of a base is (say 3'-4') perpendicular to the *XY* line.
2. Draw the true shape of a base in the F.V. and project its T.V. with the given axis length.

Stage II

3. Redraw the T.V. of stage Ist as per the given inclination of an axis at an angle $\phi = 30°$ with the *XY* line. (i.e. inclination with the V.P.)
4. Project the points from the T.V. vertically up and project the points from the F.V. of stage I horizontally towards the right to get the corresponding points of the F.V. of stage IInd.
5. Join the points in a proper sequence with *care of visibility* and *non-visibility.*

Stage III

6. Draw a line inclined at an angle $\theta = 45°$ with the *XY* line and cut the T.L. of the axis on it.
7. Draw a locus line from any one end point parallel to the *XY* line. Taking elevation length (E.L.) of an axis from stage IInd and keeping at other end point as a centre, cut an arc on the locus line. This gives an apperent angle α with the *XY* line.
8. Redraw the F.V. of stage IInd on a line, which makes an angle α with *XY* fixing E.L. of an axis.
9. Project the points from the F.V. vertically down and project the points from the T.V. of stage IInd horizontally towards the right to get the corresponding points of the T.V. and draw the final projection with *care of visibility* and *non-visibility.*

Scanned by CamScanner

Problem 25

A square prism, side of base 40 mm and height 60 mm is resting on one of the corner of the base on the H.P. The longer edge containing the corner is inclined at 50° to the H.P.

Solution : *Refer figure 10.42.*

Stage I

1. As one of the corner of a base is on the H.P., assume that the complete base of a prism in the H.P.
2. Draw the true shape of a base as a square of the sides 40 mm in the T.V. such that the centre of a base and a corner on which it is resting, should pass through the line parallel to the *XY* line and project the F.V. with 60 mm axis length.

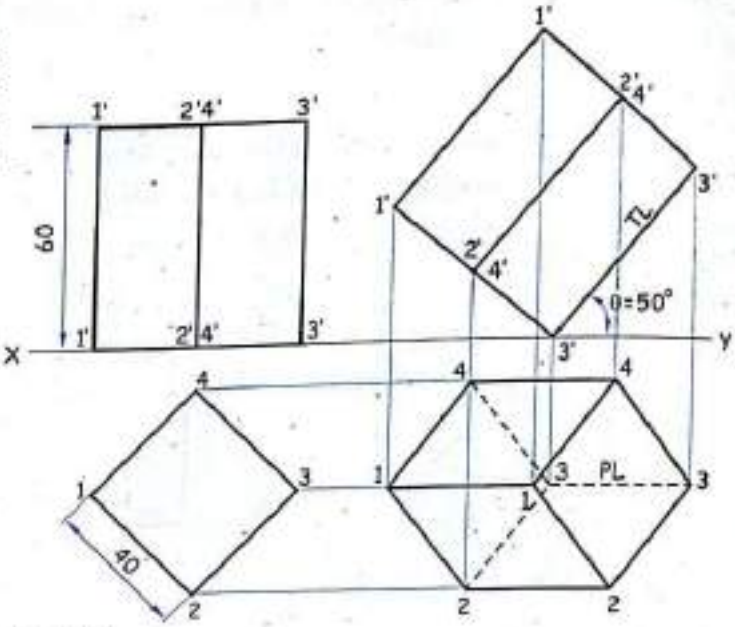

FIG. 10.42

Stage II

3. Redraw the F.V. of a prism as per the given inclination of side *3'-3'* at an angle θ = 50° with the *XY* line.
4. Project the points from the F.V. vertically down and project the points from the T.V. of stage I^st horizontally towards the right to get the corresponding points of the T.V.
5. Join the points in a proper sequence with *care of visibility* and *non-visibility.*

Problem 26

A square prism, base 30 mm side and axis 60 mm long has its corner of the base on the H.P. with its axis inclined at 30° to the H.P.

Solution : *Refer figure 10.43.*

Stage I

1. Since one of the corners of a base is on the H.P., assume the complete base of a prism in the H.P.
2. Draw the T.V. and project the F.V. by usual method.

Stage II

3. Redraw the F.V. of a prism as per the given inclination of the axis at an angle θ = 30° with the *XY* line.

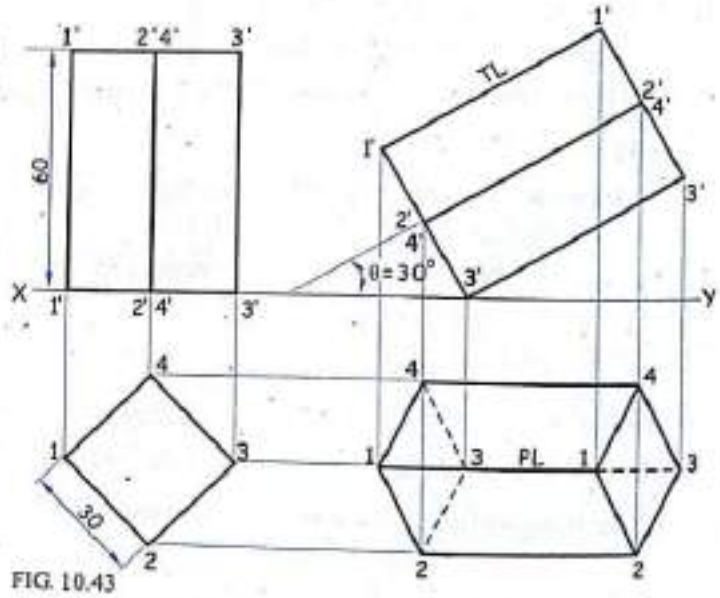

FIG. 10.43

4. Project the points from the F.V. vertically down and project the points from the T.V. of stage I^st horizontally towards the right to get the corresponding points of the T.V.
5. Join the points in a proper sequence with *care of visibility* and *non-visibility.*

Scanned by CamScanner

Problem 27

Draw the plan and elevation of a cube of solid diagonal 80 mm length when the solid diagonal is parallel to the H.P. and the corner of a cube is in the H.P.

Note : *The diagonal which is not in a plane is called as* ***solid diagonal*** *say 1'3'. Geometrical relation between solid diagonal and sides of the cube is side* $\times \sqrt{3}$ = *Solid diagonal.*

Solution : *Refer figure 10.44.*

Stage I

1. Since a cube rests on the corner on the H.P., assume that the cube to be resting on the H.P. on its base with all the vertical faces equally inclined to the V.P. Draw the T.V. and project the F.V.
2. Draw solid diagonal's front view *1'3'* and from *3'* draw a perpendicular on it.

Stage II

3. Redraw the F.V. of stage Ist such that the solid diagonal *1'3'* becomes parallel to *XY* with *3'* on *XY* and then project the T.V. with *care of visibility* and *hidden edges.*

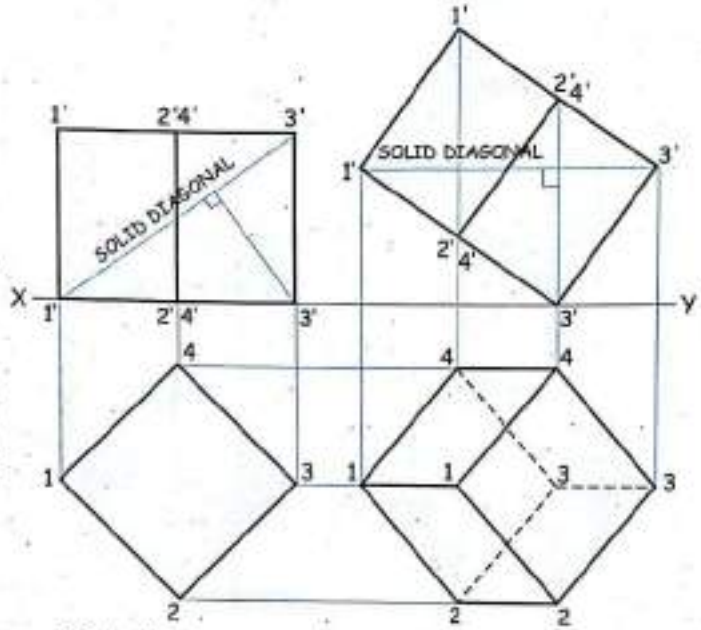

FIG. 10.44

Problem 28

A pentagonal prism of 30 mm edge of a base and 65 mm length of an axis is having an edge of a base in the V.P. Draw the projections of a prism if the rectangular side face containing that edge is inclined at 30° to the V.P. ***(Dec. '94, M.U.)***

Solution : *Refer figure 10.45.*

Stage I

1. Since one of the edge of a base is in the V.P., assume that the complete base to be in the V.P. such that the edge a of base (say 3'-4') is perpendicular to the *XY* line.
2. Draw a pentagon with side 30 mm as the true shape of a base in the V.P. and project the T.V. with axis height 65 mm.

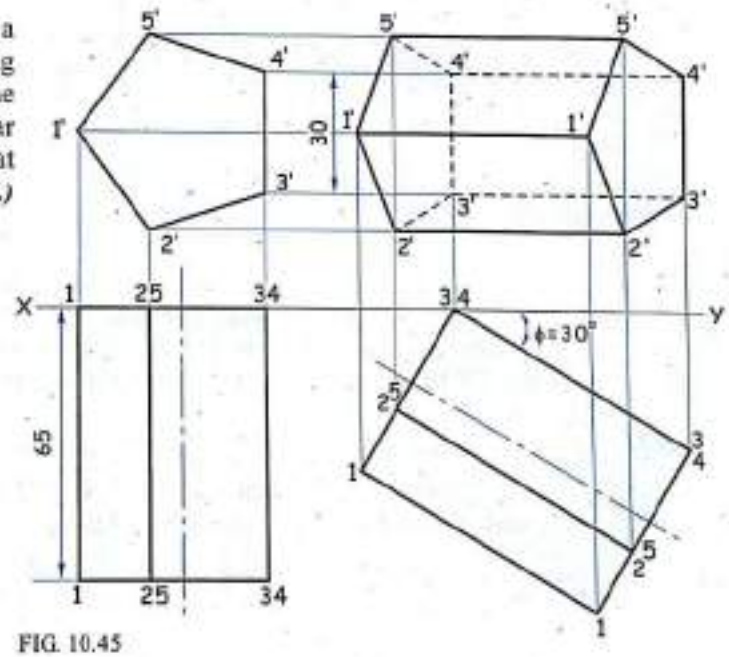

FIG. 10.45

Stage II

3. Redraw the T.V. of stage Ist such that the rectangular side face *3-3-4-4*, which appears as a line view is inclined at $\phi = 30°$ to *XY* with edge *3-4* on *XY* and then project the F.V.

Scanned by CamScanner

Problem 29

A pentagonal prism having an edge of base 25 mm, axis height 60 mm has one of its corner in the H.P. The axis is inclined at 30° to the H.P. and the T.V. of an axis is inclined at 45° to the V.P. Draw the projections.

Solution

Refer figure 10.46.

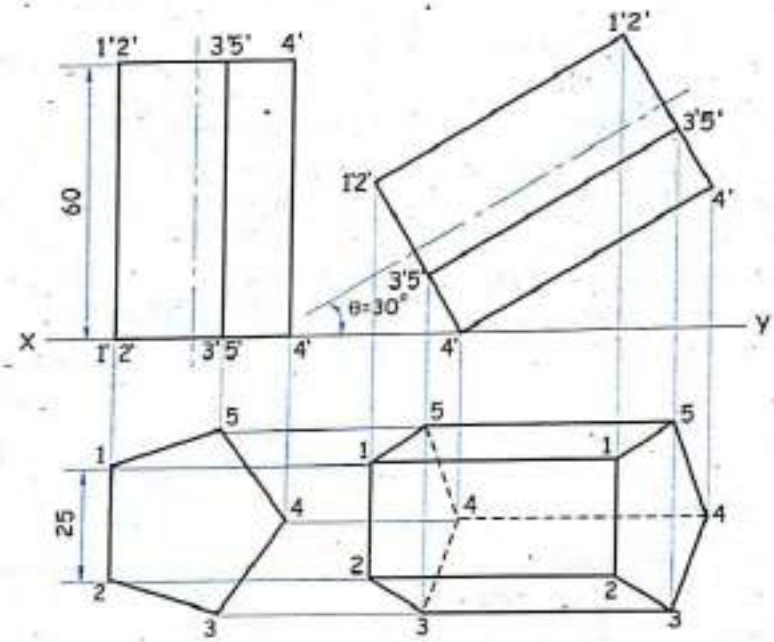

FIG. 10.46

Stage I

1. As one of the corner is in the H.P., assume that the complete base to be in the H.P. Draw a pentagon of side 25 mm such that the line drawn through the centre and one of the corner is parallel to the *XY* line. Project the F.V. with axis height 60 mm.

Stage II

2. Redraw the F.V. of stage Ist with corner *4'* on *XY* and axis inclined at $\theta = 30°$ to *XY* (i.e. inclination with the H.P.). Project the T.V. with *care of visibility* and *non-visibility*.

Scanned by CamScanner

Problem 30

A square pyramid of 40 mm edge of base and 60 mm length of an axis is resting in the H.P. on one of its base edges. The axis makes an angle of 30° with the H.P. Draw its projections if the top view of an axis is inclined at 45° to the V.P.

Solution

Refer figure 10.47.

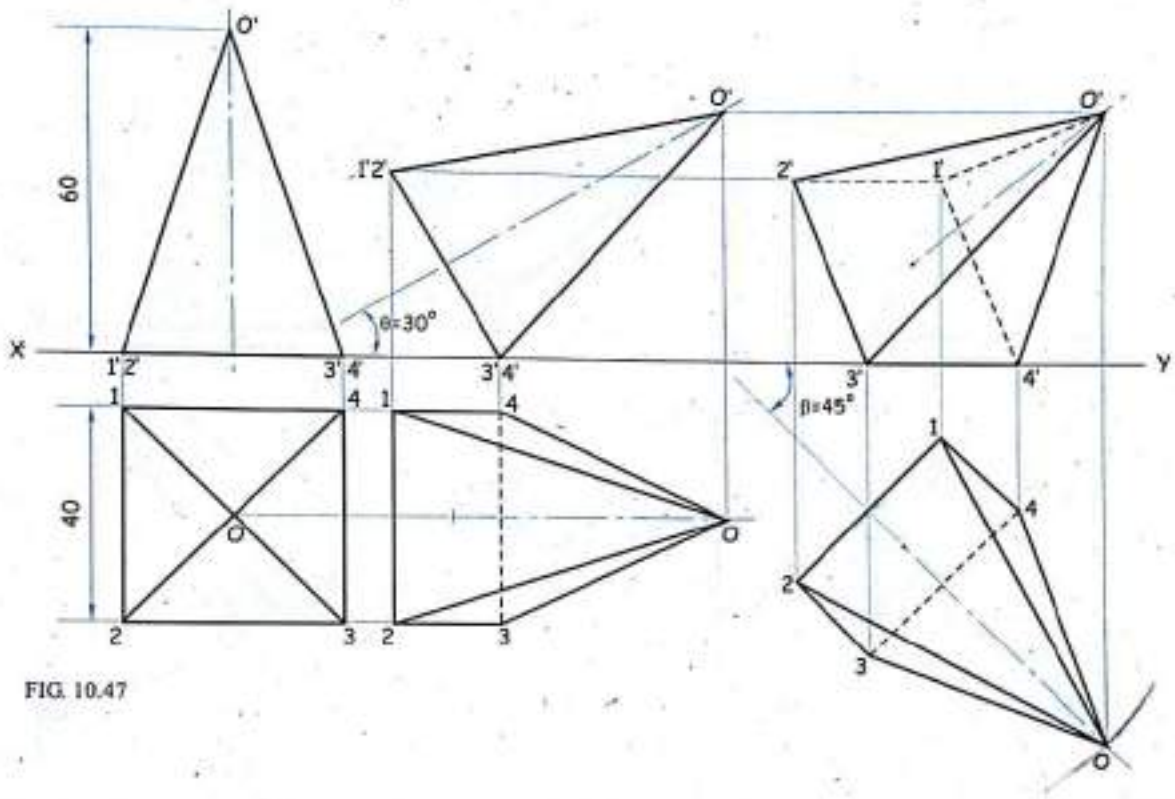

FIG. 10.47

Stage I

1. Since one of the base edge is in the H.P., assume that the complete base to be in the H.P. and draw the top view as a square with the side 3-4 placed perpendicular to the *XY*. Project the F.V. with axis height 60 mm.

Stage II

2. Redraw the F.V. of stage Ist with axis inclined at 30° to *XY* (i.e. θ = 30°). Project the top view with *care of visibility.*

Stage III

3. Redraw the T.V. of stage IInd with top view of the axis inclined at β = 45° to the *XY*. Project the F.V. with *care of visibility* and *non-visibility.*

Scanned by CamScanner

Problem 31

Draw the top view and the front view of a square pyramid of the side of base 35 mm and height 50 mm when it lies with one of its triangular faces on the H.P. The base edges contained by face lying on the H.P. is inclined at 45° to the V.P. Take apex nearer to the observer.

Solution

Refer figure 10.48.

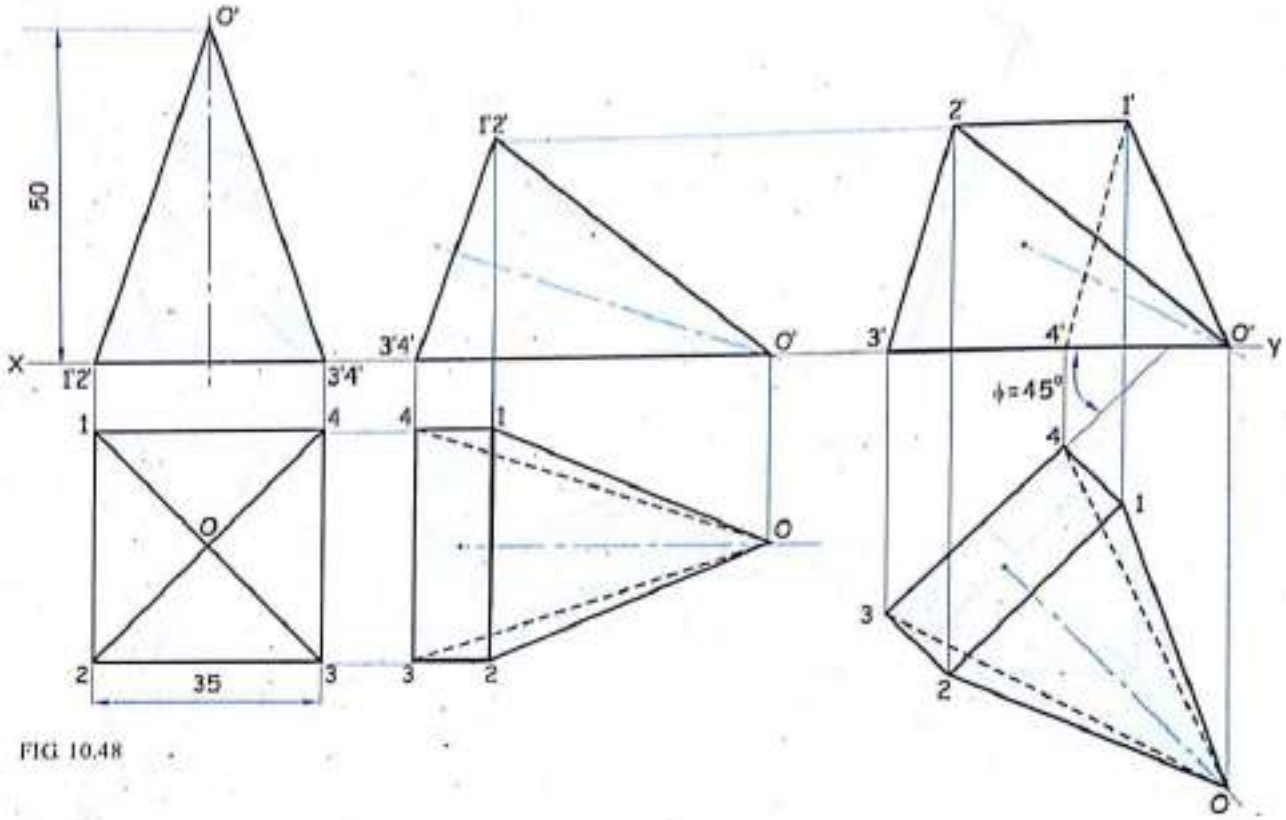

FIG. 10.48

Stage I

1. Since one of the triangular face is in the H.P., assume that the complete base to be in the H.P. such that edge of base of that triangular face is perpendicular to *XY*.
2. Draw the T.V. as a square having side 35 mm with edge *3-4* perpendicular to *XY* and project the F.V. with axis length 50 mm.

Stage II

3. For placing the triangular face *O'3'4'* on the H.P., redraw the F.V. of stage I such that the line view of the triangular plane *O'3'4'* lies on the *XY* line and then project the T.V. with *care of visibility*.

Stage III

4. Redraw the T.V. of stage IInd such that the edge of a triangular face which lies in the H.P. (i.e. *3-4*) makes an angle 45° to *XY* (i.e. $\phi = 45°$) and apex *O* is away from *XY* (nearer to the observer). Project the F.V. with *care of visibility*.

Scanned by CamScanner

Problem 32

A square pyramid of 40 mm side of base and 60 mm length of an axis is resting in the V.P. on one of its slant edges. Draw its projection if the plane containing that slant edge and axis is normal to the V.P., inclined at 30° to the H.P. and the base away from an observer.

Solution

Refer figure 10.49.

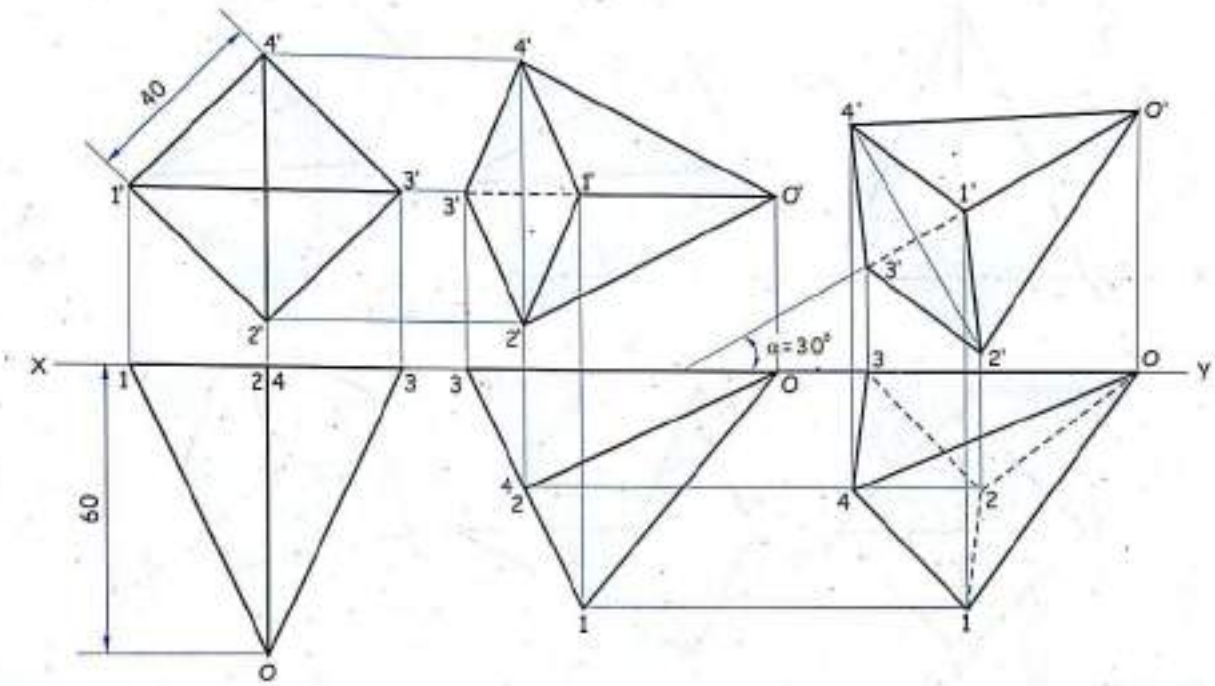

FIG. 10.49

Stage I

1. Since one of the slant edge is resting in the V.P., assume that the complete base to be in the V.P. and draw the F.V. as a square having side 40 mm, equally inclined to *XY*. Project the T.V. with axis length 60 mm.

Stage II

2. For placing the slant edge *O-3* on the V.P., redraw the T.V. of stage Ist such that the slant edge *O-3* lies on the *XY* line and then project the F.V. with *care of visibility.*

Stage III

3. The plane containing the slant edge and axis is normal to the V.P. and inclined at 30° to the H.P means F.V. of the axis is inclined at $\alpha = 30°$ to *XY.*
4. Redraw the F.V. of stage IInd with its axis inclined at $\alpha = 30°$ to *XY* such that the apex is away from *XY* (base away from the observer). Project the T.V. with *care of visibility.*

Scanned by CamScanner

Problem 33

A square pyramid, side of base 40 mm, axis length 60 mm is suspended by a string from one of its corner of the base. The T.V. of an axis is inclined at 40° to the V.P. and apex is nearer to the observer. Draw its projections.

Solution

Refer figure 10.50.

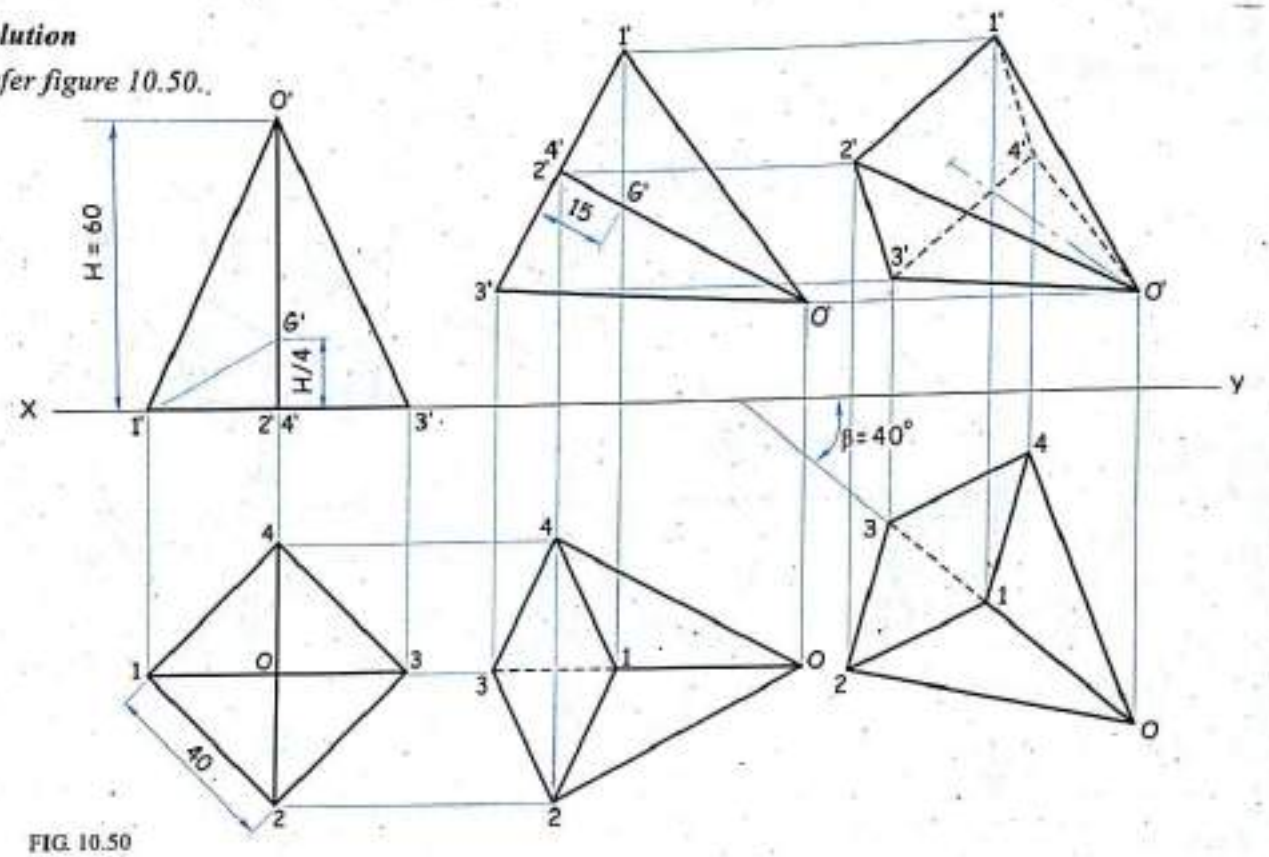

FIG. 10.50

Stage I

1. Since the pyramid is suspended by a string from one of its corner of the base, assume that the base in the H.P. and draw the T.V. as a square with side of base equally inclined with *XY*.
2. Project the F.V. with axis height 60 mm.
3. Mark *G'* on the axis *H*/4 from the base where height (*H*) = 60 mm and *G'* is the centre of gravity of a square pyramid.

Stage II

4. When pyramid is suspended by a string from one of its corner say *1'*, the line passing through *1'G'* will be perpendicular to the *XY* line, so redraw the F.V. of stage I with above satisfying condition and then project the T.V. with *care of visibility.*

Stage III

5. As the T.V. of axis is inclined at β = 40° to the V.P., redraw the T.V. of stage IInd such that the axis is at 40° to the *XY* line and apex is away from *XY* (apex nearer to the observer). Project the F.V. with *care of visibility.*

Note : *When a solid is freely suspended from a corner, then line of suspension passes through centre of gravity of the object which is always a vertical line.*

Scanned by CamScanner

9 mp

Problem 34

A hexagonal pyramid, side of base 30 mm and length of axis 60 mm is tilted towards the observer on one of its base edges in such a way that the triangular face containing the edge on which the pyramid rests, appears in front view as an isosceles triangle of 30 mm base and 45 mm altitude. Draw the projections and find the inclination of the base of the pyramid with the H.P. ***(June '96, M.U.)***

Solution

Refer figure 10.51.

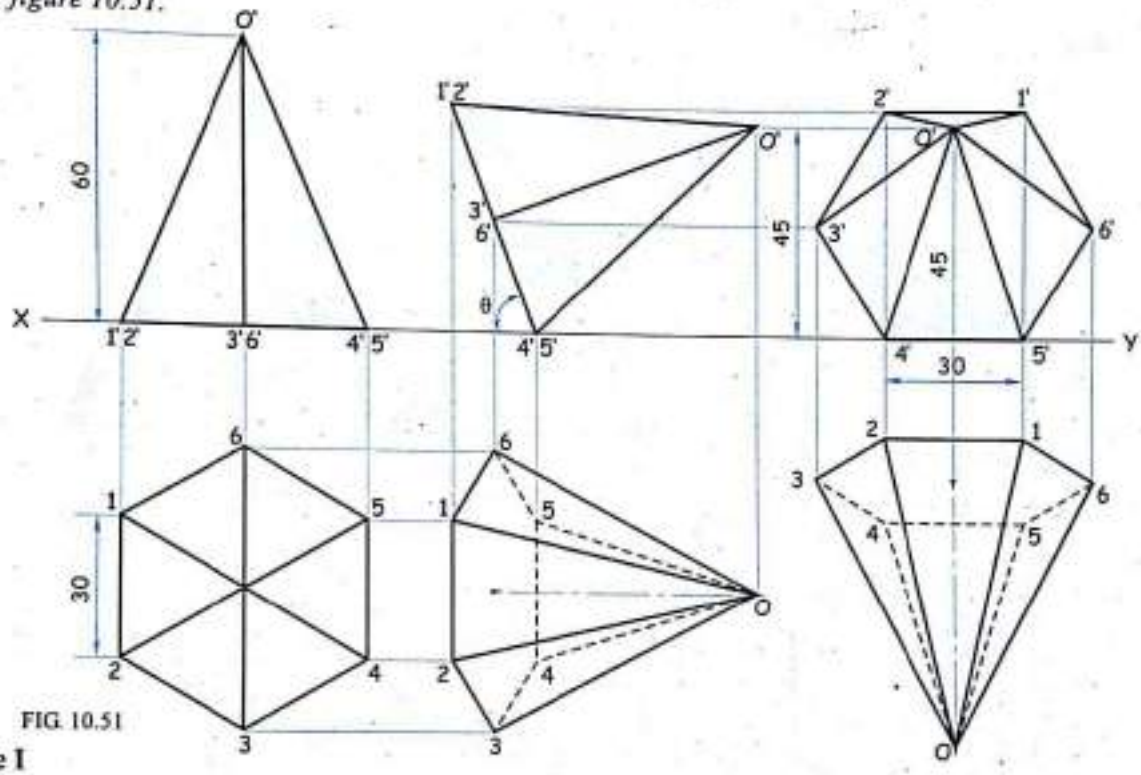

FIG. 10.51

Stage I

1. Since one of the base edge is in the H.P., assume that the complete base to be in the H.P. and draw the top view as a hexagon of 30 mm sides having one side say *4-5* perpendicular to the *XY* line. Project the F.V. with the axis length 60 mm.

Stage II

2. The triangular face *O'4'5'* has its one side as edge of base in the H.P. so if the triangular face *O'4'5* (line view) is tilted towards the right such that the apex is at height 45 mm from the *XY* line, we can obtain in IIIrd stage required position.
3. Redraw the F.V. of Ist stage to satisfy above said condition and then project the T.V. with *care of visibility.*
4. In the F.V., we get line view of base as *1'2'3'4'5'6'*, which makes an angle θ with *XY*. Measure an angle θ, which is the required inclination of base of pyramid with the H.P.

Stage III

5. As the triangular face *O45* contained by the edge of base *4-5* appear in front view as an isosceles triangle, redraw the T.V. of IInd stage such that edge of base *4-5* is parallel to the *XY* and apex is away from *XY*.
6. Project the front view which gives the required triangular face *O'4'5'* as an isosceles triangle of base 30 mm and altitude 45 mm. Draw the final projection of the F.V. with *care of visibility.*

Scanned by CamScanner

Problem 35

A right hexagonal pyramid, side of base 20 mm and height of axis 40 mm is resting on one of its triangular faces on the ground (H.P.) and the edge of the base contained by that triangular face makes an angle 45° to the V.P. Draw its projections considering the apex nearer to the V.P.

(Dec. '88, M.U.)

Solution

Refer figure 10.52.

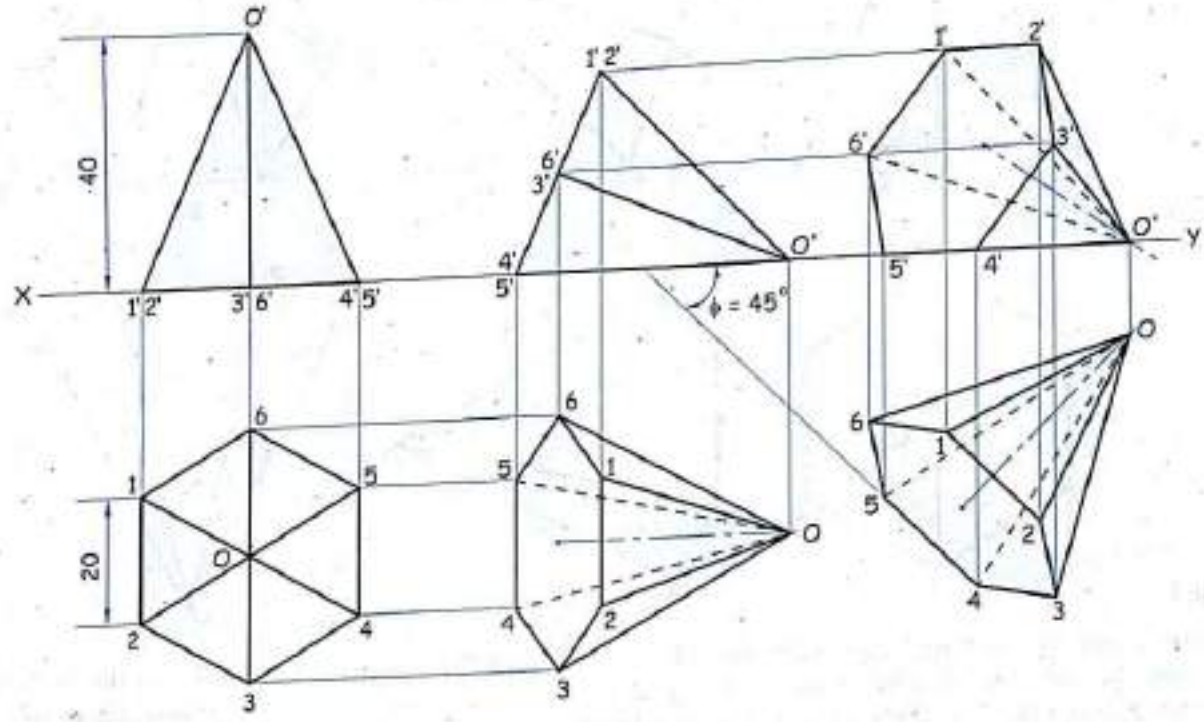

FIG. 10.52

Stage I

1. Since one of the triangular face is in the H.P., assume that the complete base to be in the H.P. such that edge of base of that triangular face say *4-5* is perpendicular to the *XY* line.
2. Draw T.V. as a hexagon having side 20 mm and project the F.V. with axis length 40 mm.

Stage II

3. For placing the triangular face *O'4'5'* on the H.P., redraw the F.V. of stage I^{sd}, such that the line view of triangular face plane *O'4'5'* lies on *XY* line and then project the T.V. with *care of visibility.*

Stage III

4. Redraw the T.V. of stage IInd such that edge of triangular face, which lies in the H.P. (i.e. *4-5*) makes an angle 45° to the *XY* (i.e. $\phi = 45°$) and apex *O* is nearer to *XY* line (nearer to the V.P.). Project the F.V. with *care of visibility.*

Scanned by CamScanner

Problem 36

A pentagonal pyramid of 30 mm edge of base and 60 mm axis height is lying on one of its triangular surface in the V.P. and the edge of base contained by triangular face makes an angle of 45° to the H.P. Draw its front view and top view having base nearer to the observer.

Solution

Refer figure 10.53.

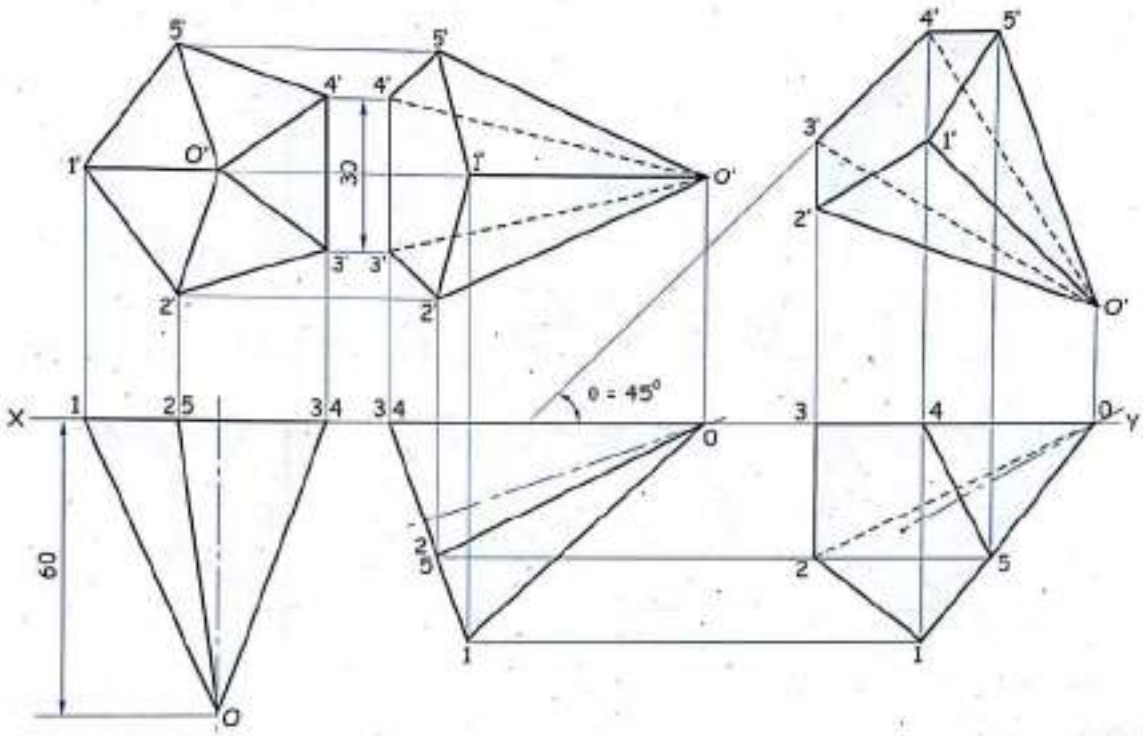

FIG. 10.53

Stage I

1. Since one of the triangular surface is in the V.P., assume complete base in the V.P.
2. Draw F.V. as a pentagon having side 30 mm such that the edge of base of that triangular face say *3'-4'* is perpendicular to *XY* and then project the T.V. with axis length 60 mm.

Stage II

3. For placing the triangular face *O34* on the V.P., redraw the T.V. of stage Ist, such that the line view of triangular surface *O34* lies on the *XY* line and then project the F.V. with *care of visibility.*

Stage III

4. Redraw the F.V. of stage IInd such that edge of triangular surface which lies in the V.P. (i.e. *3'-4'*) makes an angle 45° to the *XY* (i.e. θ = 45°) and apex *O* is nearer to the *XY* line (base nearer to the observer). Project the T.V. with *care of visibility.*

Scanned by CamScanner

Problem 37

A hexagonal pyramid, base 40 mm, side axis 100 mm long is resting in the the H.P. on a corner of its base, with base surface making an angle of 30° with the H.P. and the axis making an angle 30° with the V.P. Draw the projections of the pyramid when the apex is touching the V.P. and base of the corner which is in the H.P. equally inclined to the H.P.

Solution

Refer figure 10.54.

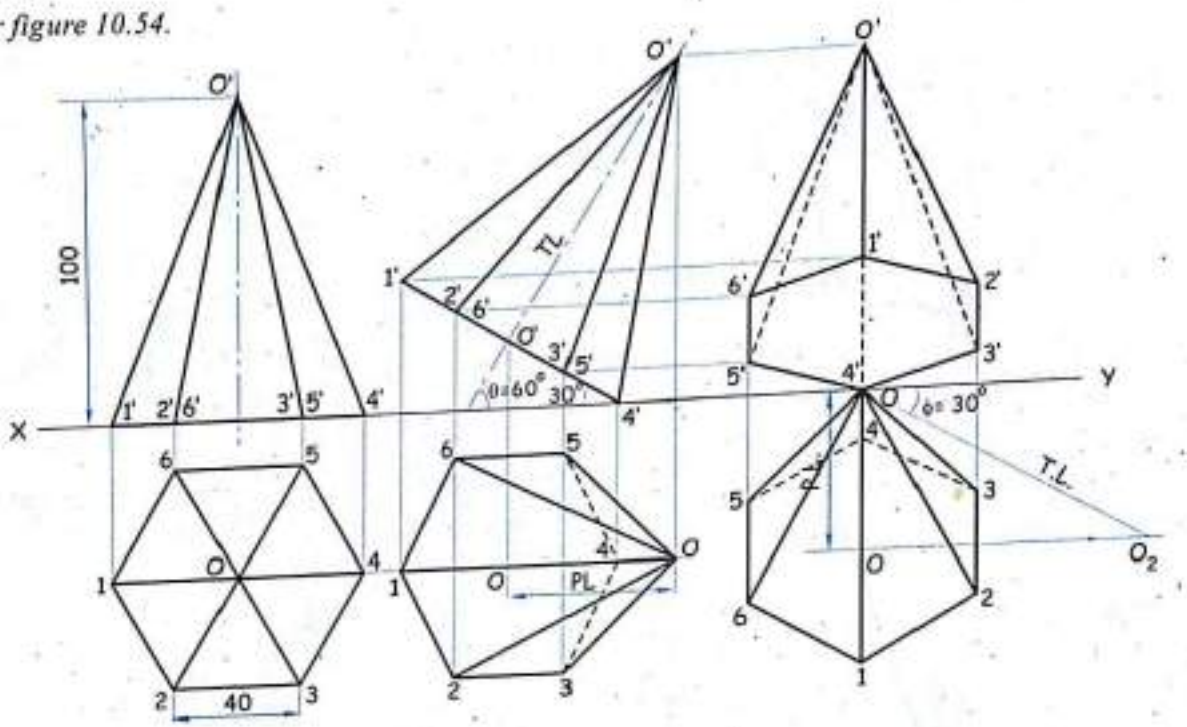

FIG. 10.54

Stage I

1. Since one of the corner of base is in the H.P., assume complete base in the H.P.
2. Draw T.V. as a hexagon having side 40 mm such that *0-4* is parallel to *XY* and then project the F.V. with axis length 100 mm.

Stage II

3. Redraw the F.V. of stage Ist with base surface *1'2'3'4'5'6'* (line view) inclined at 30° to the *XY* so axis becomes inclined at 60° to *XY* (i.e. $\theta = 60°$).
4. Project the T.V. with *care of visibility.*

Stage III

5. As axis inclined with the V.P. at 30° (i.e. $\phi = 30°$), we get $\theta + \phi = 60° + 30° = 90°$. If $\theta + \phi = 90°$, then $\alpha = \beta = 90°$.
6. As the apex is touching the V.P., redraw the T.V. of stage IInd such that apex is on the *XY* line and axis *O-O* is perpendicular to *XY* (i.e. $\beta = 90°$).
7. Project the F.V. with *care of visibility.*

Scanned by CamScanner

Problem 38

A hexagonal pyramid of 30 mm side of base and slant edges 65 mm long is lying on one of its triangular surfaces in the V.P., so that its axis is inclined at an angle of 45° to the H.P. Draw its projection if apex is nearer to the observer.

Solution

Refer figure 10.55.

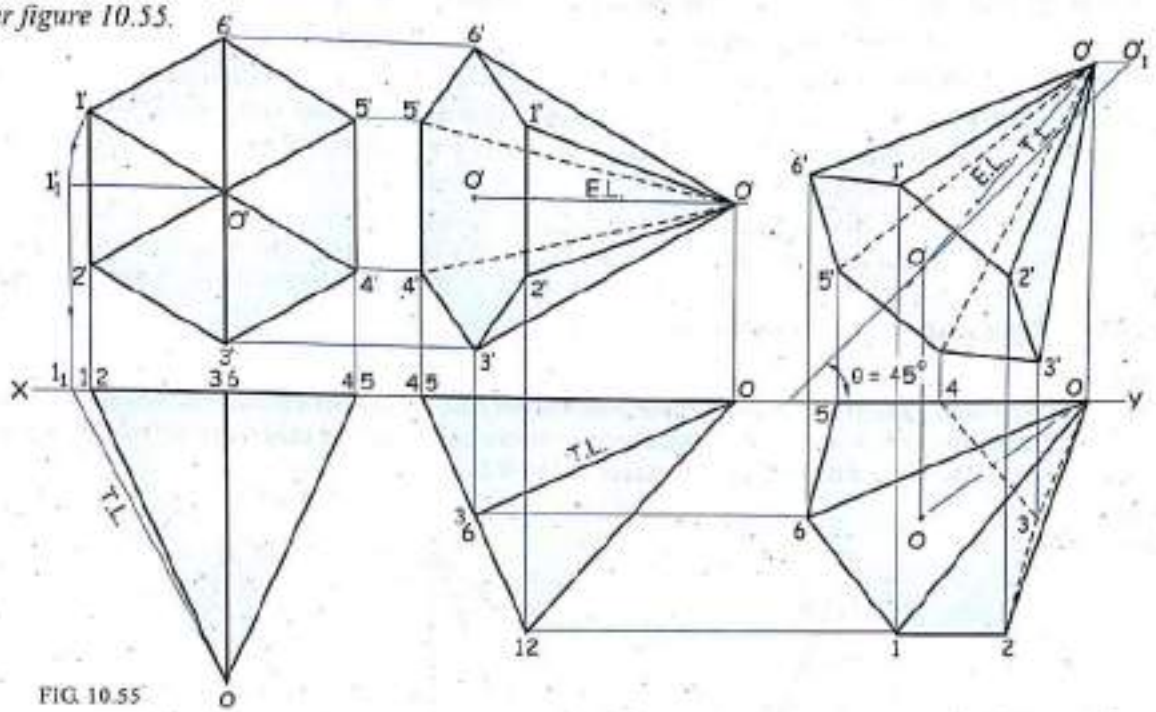

FIG. 10.55

Stage I

1. Since one of the triangular surface is in the V.P., assume complete base in the V.P.
2. Draw F.V. as a hexagon having side 30 mm such that the edge of base of that triangular face say *4'-5'* which is in the V.P. is perpendicular to the *XY* and then project the T.V. with given slant edges 65 mm.

How to construct the true length of slant edge to find axis height ?

(i) With centre *O'* and radius equal to *O'1'* obtained by rotating $O'1'_1$.

(ii) Through $1'_1$ draw projector vertically down and mark 1_1 on *XY* line.

(iii) Draw a projector through *O'* vertically down.

(iv) With centre 1_1 and radius equal to true length of slant edge = 65 mm, cut an arc and mark *O* on the drawn projector.

(v) Join 1_1,*O* which is the true length of slant edge and hence, we get required height of axis.

Stage II

3. To get triangular surface *O45* in the V.P. pyramid is completely tilted by redrawing the T.V. of stage Ist such that the line view of triangular surface *O45* is on the *XY* line.
4. Project the F.V. with *care of visibility.*

Scanned by CamScanner

Stage III

5. In the F.V. of stage IInd, the axis is having an apparent length (i.e. E.L.) so to make axis inclination with the H.P. at 45°, apparent angle α is required.
6. Draw the inclined line at 45° to XY (i.e. $\theta = 45°$).
7. Mark $O'O'_1$ as the true length of an axis.
8. Draw the locus line of O'_1 parallel to the XY line. With centre O' and radius equal to $O'O'$ from stage IInd (E.L.) mark O' on locus line.
9. Join $O'O'$ which gives an apparent angle α.
10. Fixing $O'O'$ at α, redraw the F.V. of stage IInd such that apex is away from the XY line (nearer to observer) and then project the T.V. with *care of visibility* and *non-visibility*.

Problem 38(a)

A hexagonal pyramid of 40 mm side of base and 75mm axis length is lying on one of its triangular surface in the V.P. so that its axis is inclined at an angle at45° to the H.P. Draw its front view and top view. ***(May '87, M.U.)***

Solution : *Refer similar solved problem no. 38.*

Problem 39

A hexagonal pyramid of 30 mm side, 65 mm axis length rest on one of its edge of base on the H.P., which is parallel to the V.P. and H.P. The triangular plane contained by that edge on which it rests is perpendicular to the H.P. and parallel and nearer to the V.P.

Solution

Refer figure 10.56.

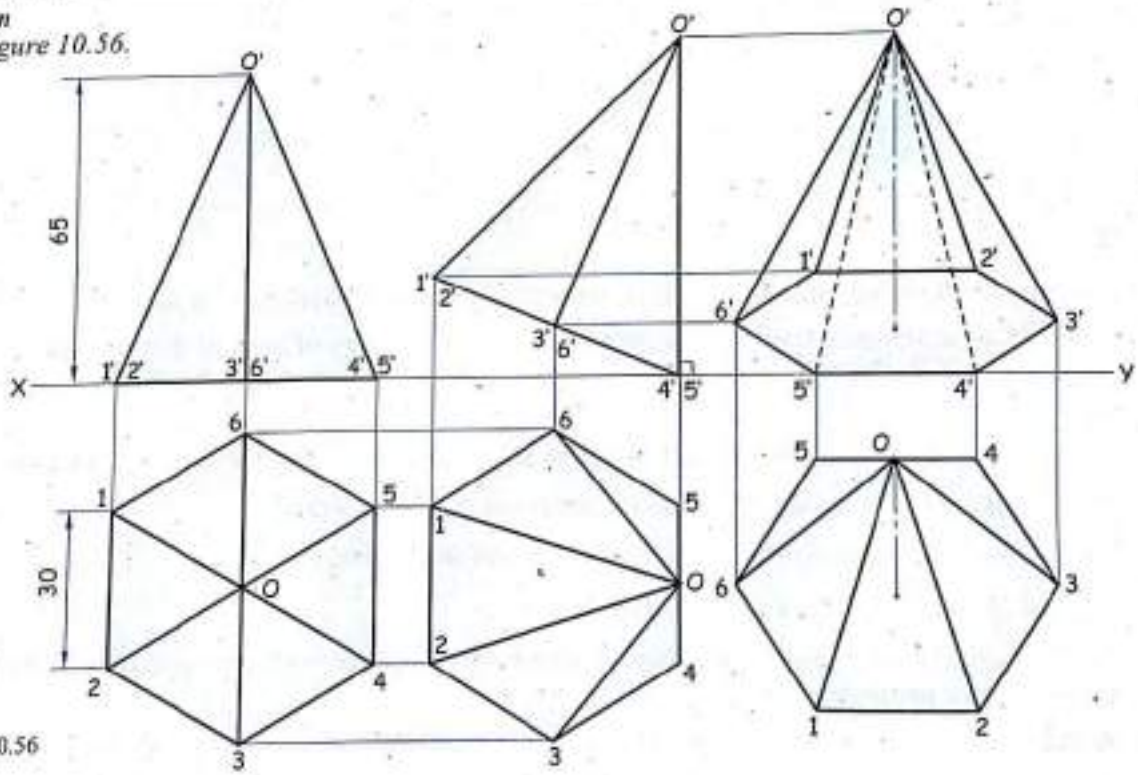

FIG. 10.56

Stage I

1. Since one of the edge of base is in the H.P., assume that the complete base to be in the H.P.
2. Draw a hexagon of sides 30 mm with one of the side say *4-5* perpendicular to the XY line and then project the F.V. having axis length 60 mm.

Scanned by CamScanner

Stage II

3. As the triangular plane contained by the edge of base *4-5* is perpendicular to the H.P., redraw the F.V. of stage I such that the triangular plane *O'4'5'* (line view) will be perpendicular to *XY* line.
4. Project the T.V. with *care of visibility.*

Stage III

5. To obtain the edge of base *4-5* contained by a triangular face parallel to the H.P. and the V.P., redraw the T.V. of stage II such that *4-5* is parallel and nearer to *XY*.
6. Project the F.V. with *care of visibility.*

Problem 39(a)

A hexagonal pyramid of base side 30 mm and axis length 60 mm is kept with a side of base parallel to the V.P. and the triangular face containing that side being vertical. Draw the projections of the solid.

(Feb. '01, M.U.)

Solution : *Refer similar solved problem no. 39.*

Problem 40

A pentagonal pyramid base edge 25 mm and slant edges 60 mm long is resting on one of its base corners with its axis inclined at 30° to the H.P. Draw its projections if the base side opposite to the base corner on the H.P. makes an angle of 40° to the V.P. and apex nearer to the observer.

Solution

Refer figure 10.57.

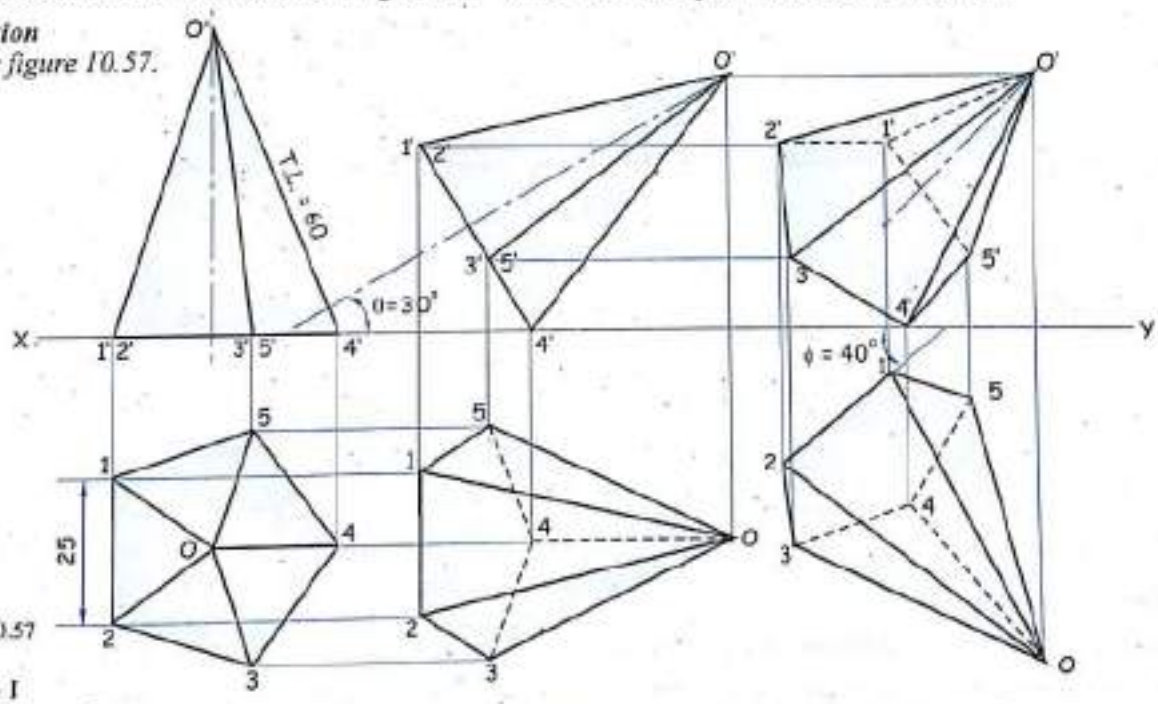

FIG. 10.57

Stage I

1. Since one of the corner is resting in the H.P., assume the complete base in the H.P.
2. Draw the T.V. as a pentagon of side 25 mm with slant edge *O-4* parallel to *XY*.
3. Project the F.V. with the given true length of slant edge = 60 mm (i.e. *O'-4'* = 60 mm)

Stage II

4. Redraw the F.V. with axis inclined at 30° to *XY* (θ = 30°) and corner *4'* on the *XY* line.
5. Project the T.V. with *care of visibility.*

Scanned by CamScanner

Stage III

6. Since side opposite to the base corner on the H.P. makes an angle of $\phi = 40^o$ to the V.P. redraw T.V. of stage IInd such that side *1-2* makes an angle 40° to *XY* and apex is away from *XY* line (i.e. nearer to the observer).

7. Project the F.V. with *care of visibility*.

Imp

Problem 41

A right regular pentagonal pyramid of 50 mm base sides and height 90 mm is lying on one of its triangular surface on the ground (H.P.), such that the top view of the axis is inclined at an angle of 45° to the V.P. Draw its front view and top view when apex of the pyramid is nearer to V.P.

(May '86, M.U.)

Solution

Refer figure 10.58.

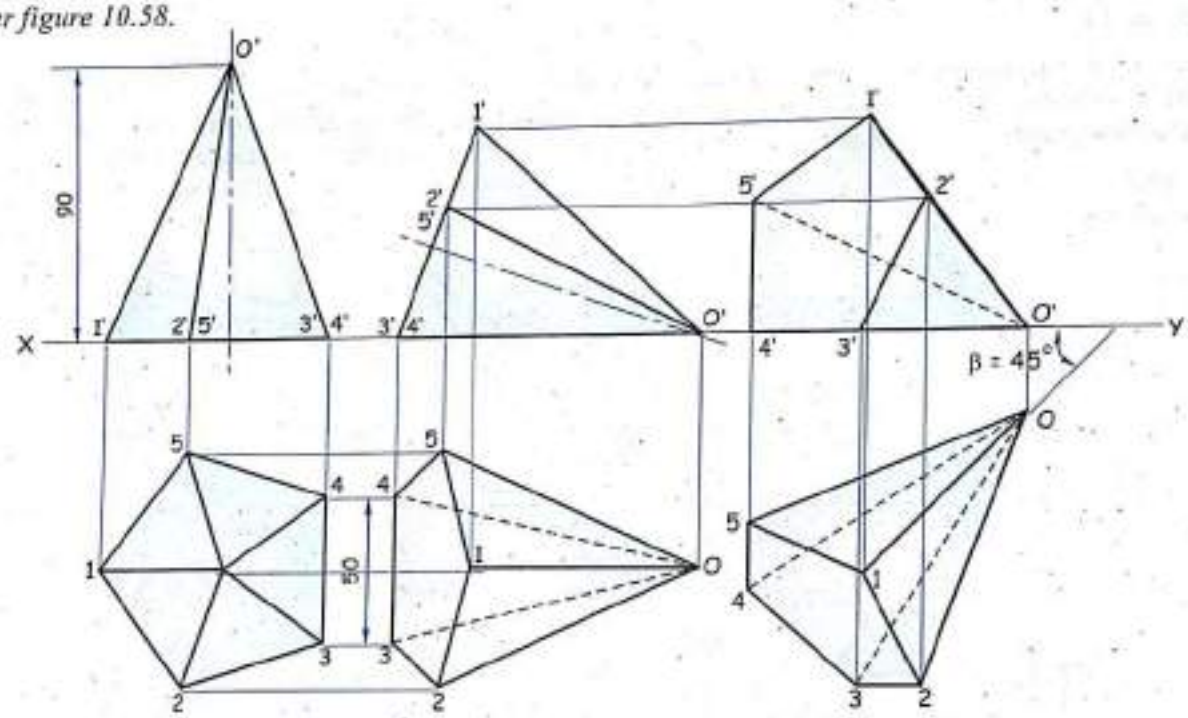

FIG. 10.58

Stage I

1. Since one of the triangular face is lying on the H.P., assume the complete base on the H.P.
2. Draw the T.V. as a pentagon of side 50 mm with side base *3-4* perpendicular to *XY*.
3. Project the F.V. with axis length 90 mm.

Stage II

4. To make triangular face *O'3'4'* (line view) to lie on the H.P., redraw the F.V. of stage Ist such that line view *O'3'4'* lies on the *XY* line.
5. Project the T.V. with *care of visibility*.

Scanned by CamScanner

Stage III

6. Redraw the T.V. of stage IInd such that the axis is inclined at $\beta = 45^0$ to XY and apex nearer to XY (i.e. away from an observer)
7. Project the F.V. with *care of visibility*.

Problem 42

A pentagonal pyramid, base edge 30 mm and axis length 70 mm long has one of its slant edge in the H.P. The plan length of a slant edge contained by the H.P. makes an angle 30° to the V.P. Draw its projections.

Solution

Refer figure 10.59.

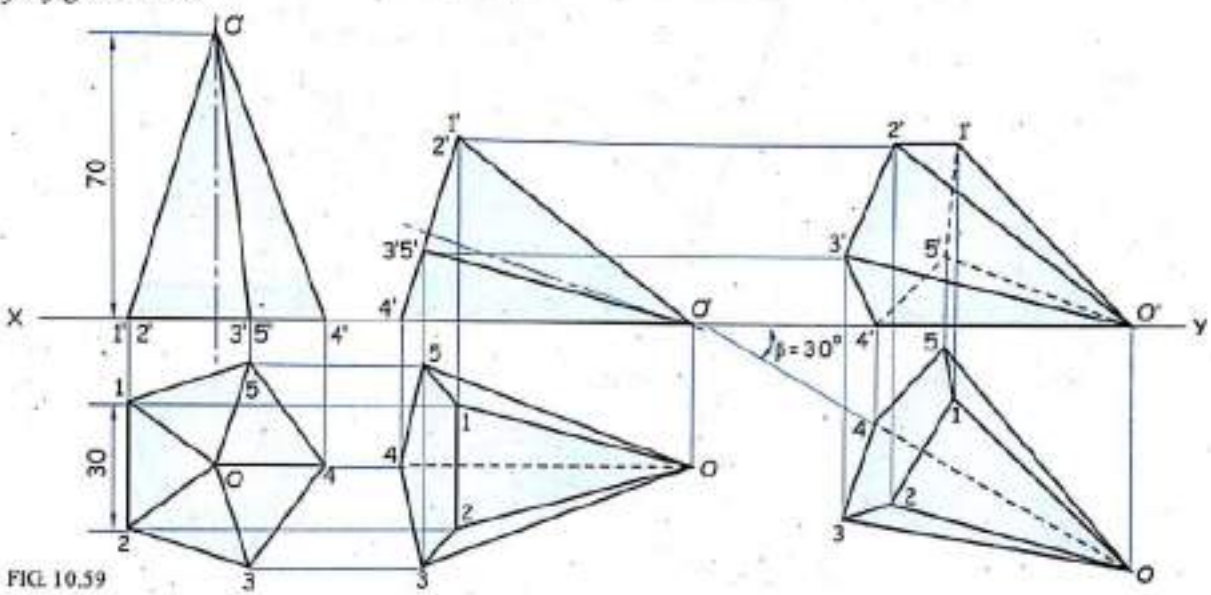

FIG. 10.59

Stage I

1. Since one of the slant edge is in the H.P., assume the complete base in H.P.
2. Draw the T.V. as a pentagon with side 30 mm such that the the slant edge O-4 is parallel to XY.
3. Project the F.V. with the given axis height 70 mm.

Stage II

4. Redraw the F.V. of stage Ist such that the slant edge O'-$4'$ lies on the XY line.
5. Project the T.V. with *care of visibility*.

Stage III

6. Redraw the T.V. of stage IInd such that the axis is inclined at 30° to the XY line.
7. Project the F.V. with *care of visibility*.

Problem 42(a)

A pentagonal pyramid, base edges 40 mm and axis length 75 mm rests on its slant edge on H.P., which is inclined at 30° to V.P. Draw its projections with apex nearer to the observer.

(Dec. '11, M.U.)

Solution : *Refer figure 10.59.* Similar solution.

Scanned by CamScanner

Problem 43

A pentagonal pyramid, side of base 35 mm and axis 70 mm long is lying on one of its corners on the H.P. such that the two base edges passing through the corner on which it rests makes an equal inclination with the H.P. One of its triangular surface is parallel to the H.P. and perpendicular to the V.P. and the base edge containing that triangular surface is parallel to both the H.P. and the V.P. Draw the projections of the solid when the apex of the pyramid is nearer to the observer.

(May '92, Dec. '06, Dec. '07, M.U.)

Solution

Refer figure 10.60.

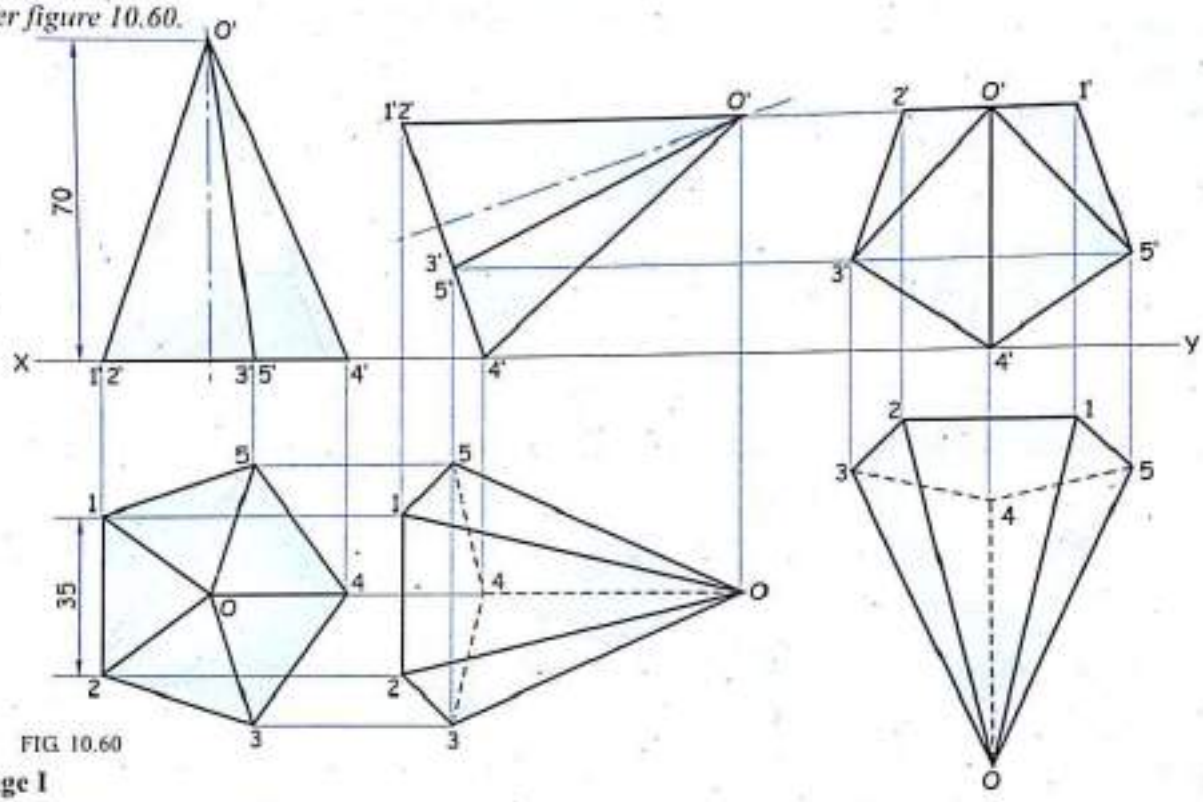

FIG. 10.60

Stage I

1. Since one of the corner is on the H.P., assume that the complete base to be on H.P.
2. Draw the T.V. as a pentagon with side 35 mm such that the line joining the corner *4* and apex *O* is parallel to *XY*.
3. Project the F.V. with the given axis length 70 mm.

Stage II

4. Redraw the F.V. of stage Ist such that the triangular surface *O'1'2'* (line view) becomes parallel to the *XY* line and corner *4'* is on *XY*. (two base edges, i.e. *3-4* and *4-5* passing through the corner *4* becomes equally inclined with the H.P.)
5. Project the T.V. with *care of visibility*.

Stage III

6. Since the base edge *1-2* contained by a triangular face *O12* is parallel to both the H.P. and the V.P., redraw the T.V. of stage IInd such that the base edge *1-2* is parallel to *XY* and apex away from *XY* (i.e. apex nearer to the observer)
5. Project the F.V. with *care of visibility*.

Scanned by CamScanner

Problem 44

A pentagonal pyramid has a corner of its base on the H.P. with the triangular face opposite to it inclined 45° to the H.P. and a slant edge within that triangular face inclined at 30° to the V.P. Draw the projections of a pyramid if an edge of its base is 30 mm and the axis is 65 mm long.

(Dec. '95, June '01, Nov. '04, M.U.)

Solution

Refer figure 10.61.

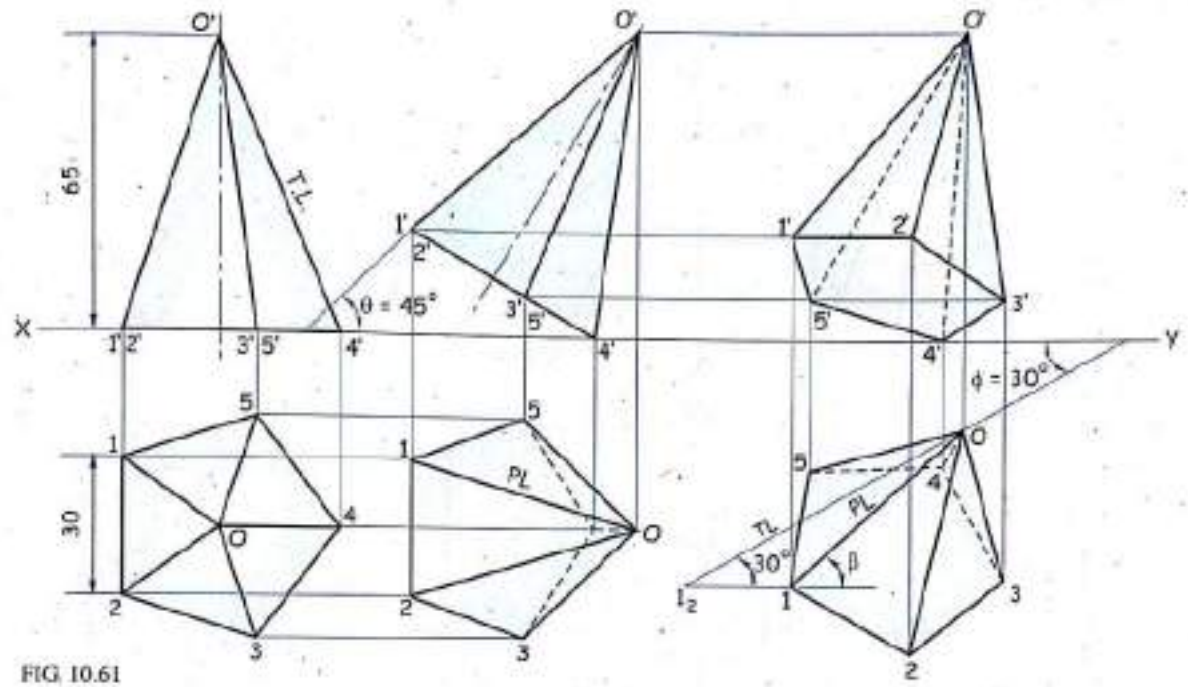

FIG. 10.61

Stage I

1. Since one of the corner is in the H.P., assume complete base on the H.P.
2. Draw the T.V. as a pentagon of sides 30 mm such that the line joining the corner *4* and apex *O* is parallel to *XY*.
3. Project the F.V. with the given axis height 65 mm.

Stage II

4. Since the triangular surface *O'1'2'* (line view) is opposite to the corner *4'*, redraw the F.V. of stage Ist such that the triangular face *O'1'2'* is at an angle $\theta = 45^0$ to the *XY* and corner *4'* is on *XY*.
5. Project the T.V. with *care of visibility.*

Stage III

6. Draw the inclined line at $\phi = 30^o$ to *XY* and mark $O\text{-}1_2$ as a true length of a slant edge. Draw a locus line through 1_2 parallel to *XY* and with centre *O* and radius equal to P.L. (*O-1*) from stage IInd to the T.V. mark *1* on locus line. Join *O1* which gives an apparent angle β.
7. Fixing *O1* on β angle redraw the T.V. of stage IInd.
8. Project the F.V. with *care of visibility.*

Scanned by CamScanner

Problem 45

A pentagonal pyramid has a height of 60 mm and the side of a base 30 mm. The pyramid rests with one of the sides of a base on the H.P. such that the triangular face containing that side is perpendicular to the H.P. and makes an angle of 30° with the V.P. Draw its projections.

(Dec. '96, Dec. '10, M.U.)

Solution

Refer figure 10.62.

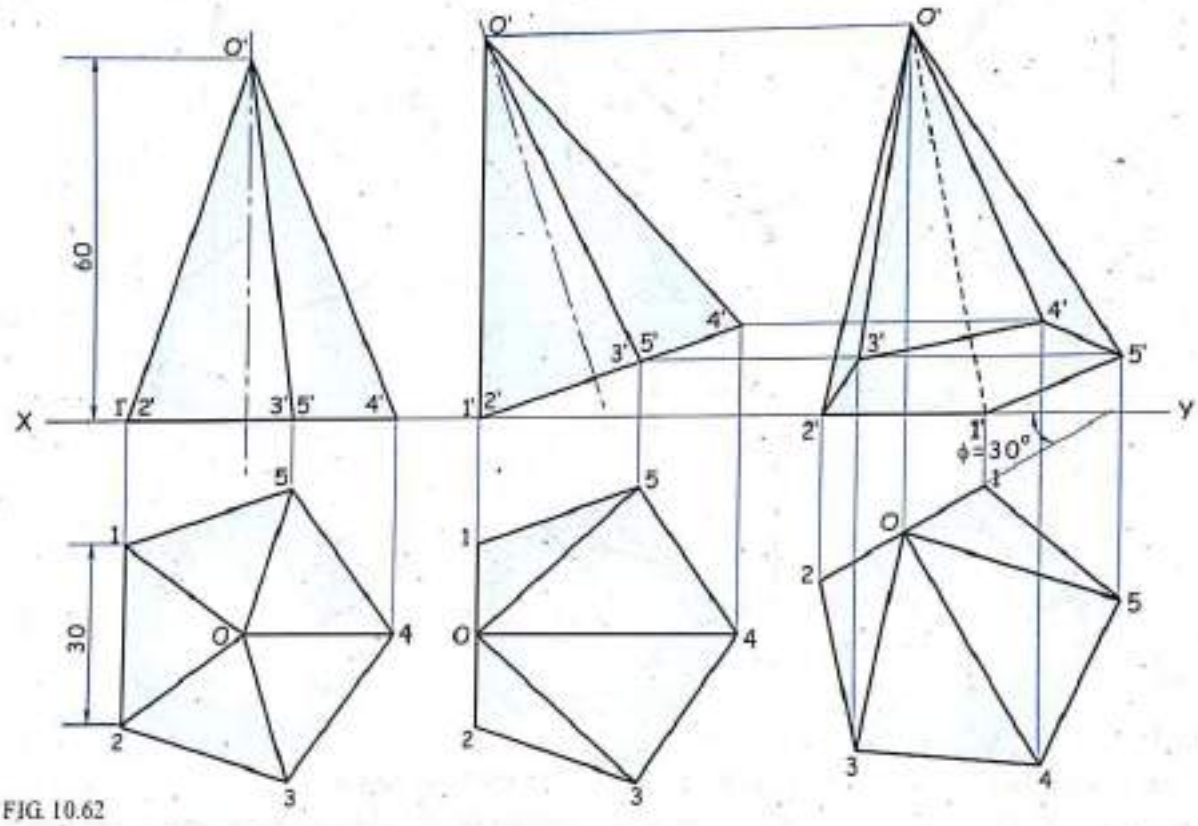

FIG. 10.62

Stage I

1. Since one of the side of a base is on the H.P., assume the complete base in the H.P.
2. Draw the T.V. with the side of a base *1-2* perpendicular to the *XY* line.
3. Project the F.V.

Stage II

4. Since the triangular face *O'1'2'* (line view) containing the side of a base *1-2* is perpendicular to the H.P., redraw the F.V. of stage Ist such that the line view of a triangular face *O'1'2'* is perpendicular to the *XY* line with *1'2'* on the *XY* line.
5. Project the T.V. with *care of visibility.*

Stage III

6. Redraw the T.V. of stage IInd such that the side of a base *1-2* is inclined at $\phi = 30^0$ to *XY*.
7. Project the F.V. with care of visibility.

Scanned by CamScanner

Problem 46

A pentagonal pyramid of 30 mm edge of base and 60 mm axis height is lying on one of its triangular surfaces in the V.P. so that the axis is inclined at an angle of 45° to the H.P. Draw its front view and top view.

(June '89, M.U.)

Solution

Refer figure 10.63.

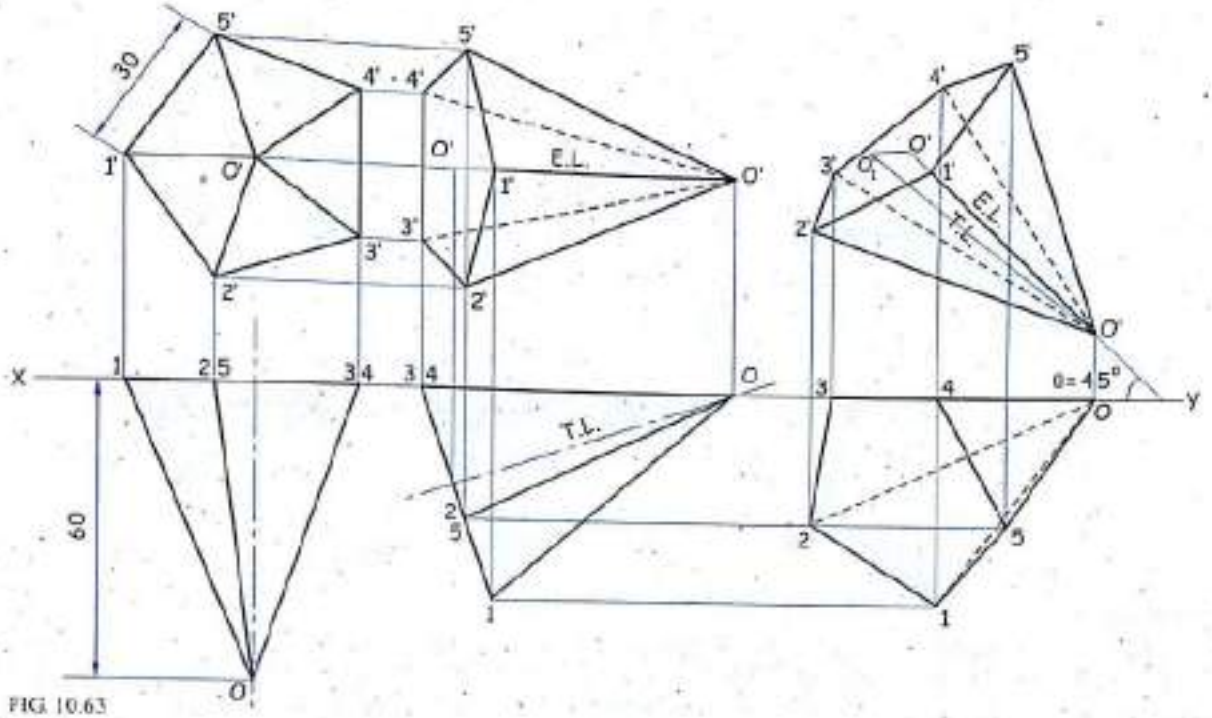

FIG. 10.63

Stage I

1. Since one of the triangular surface is in the V.P., assume the complete base in the V.P.
2. Draw the F.V. as a pentagon with edge of base *3'-4'* perpendicular to the *XY* line.
3. Project the T.V. with axis height 60 mm.

Stage II

4. Redraw the T.V. of stage I^st^ such that the line view of a triangular surface *O34* lies on the *XY* line.
5. Project the F.V. with *care of visibility*.

Stage III

6. Since axis is inclined to the H.P. $\theta = 45^0$, draw an apparent angle α.
7. Fixing the Elevation length (E.L.) of an axis on angle α, redraw the F.V. and then project the T.V. with *care of visibility*.

Problem 46(a)

A pentagonal pyramid of 40 mm side of base and 75 mm axis length, having one of its triangular faces in V.P. so that its axis is inclined at an angle of 45° to the H.P. Draw the front view and top view.

(Dec. '91, M.U.)

Solution: *Refer similar solved problem no. 46.*

Scanned by CamScanner

Problem 47

A pentagonal pyramid of side of base 30 mm, axis height 65 mm has one of the base corner in the V.P. and triangular face opposite to this base corner inclined to the V.P. at 30°. Draw the projection of a pyramid if the side of a base contained by a triangular face which is opposite to the corner is inclined to the H.P. at 30° and apex nearer to the observer.

Solution

Refer figure 10.64.

It is self explanatory.

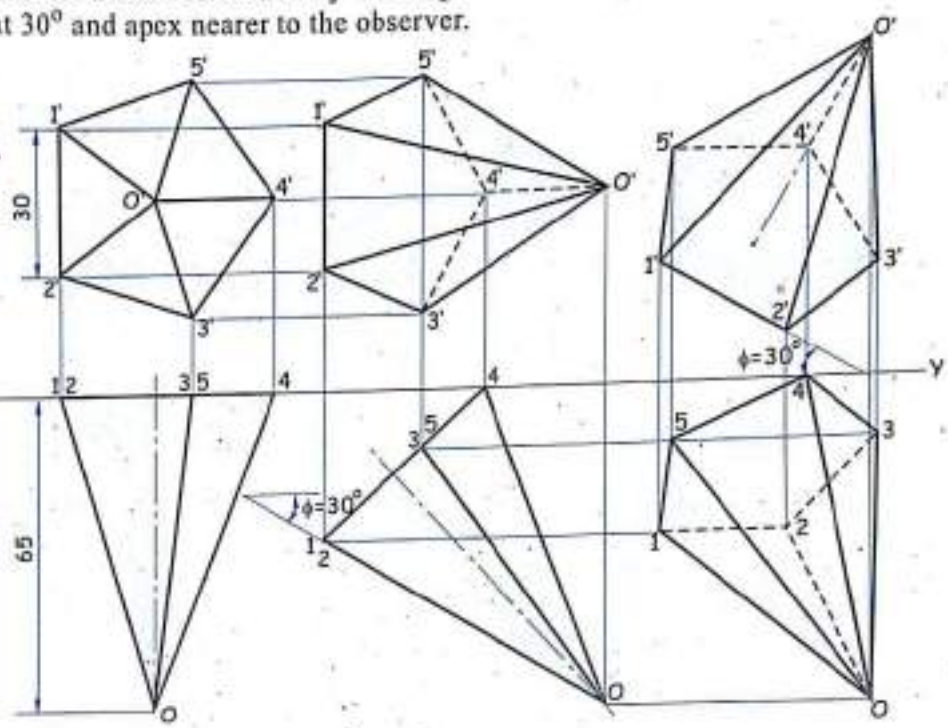

FIG. 10.64

Problem 48

A pentagonal pyramid, edge of base 25 mm, axis length 65 mm has one of its edge of base in the H.P. and triangular face contained by that edge of base is inclined at 50° to the H.P. Draw the projections of a pyramid if the edge of base which is in the H.P. is parallel to both the H.P. and V.P. and the apex is nearer to the V.P.

Solution

Refer figure 10.65.

It is self explanatory.

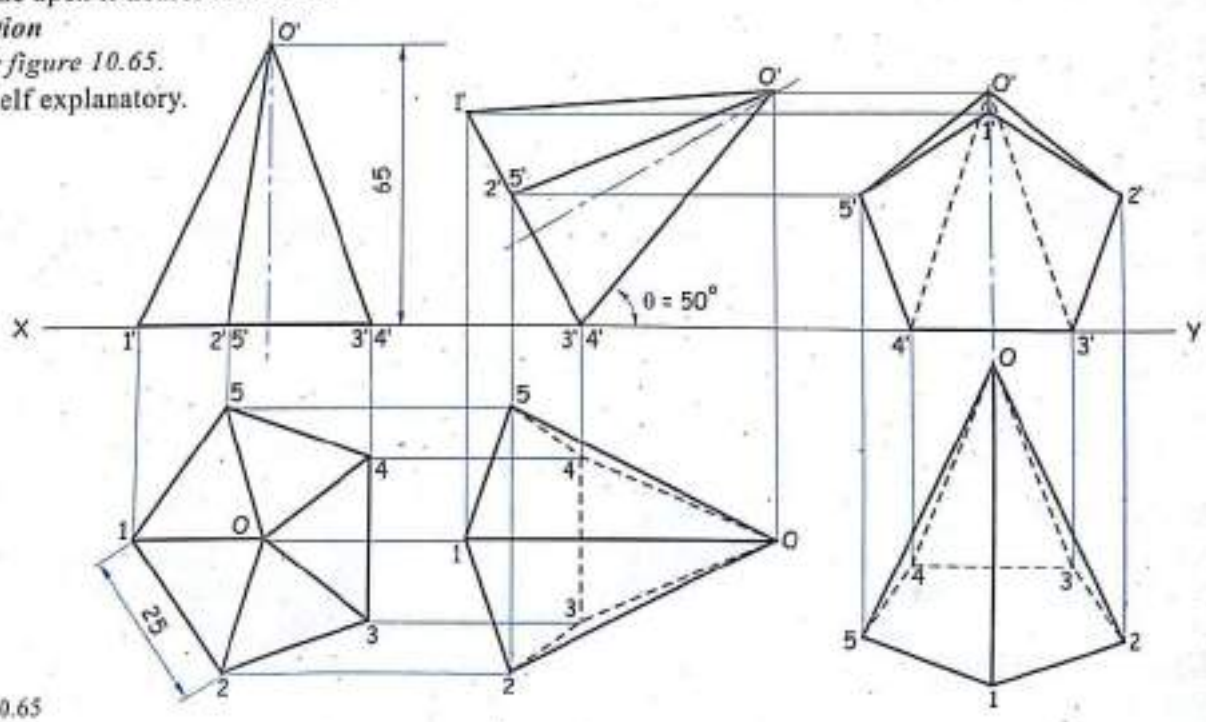

FIG. 10.65

Scanned by CamScanner

Problem 49

A tetrahedron $PQRS$ of 50 mm long edges has edge PQ in the H.P. The edge RS is inclined at 30° and 45° to the H.P. and the V.P. respectively. Draw its projections.

Note : *The tetrahedron is equilateral triangular pyramid with all six edges equal.*

Solution

Refer figure 10.66.

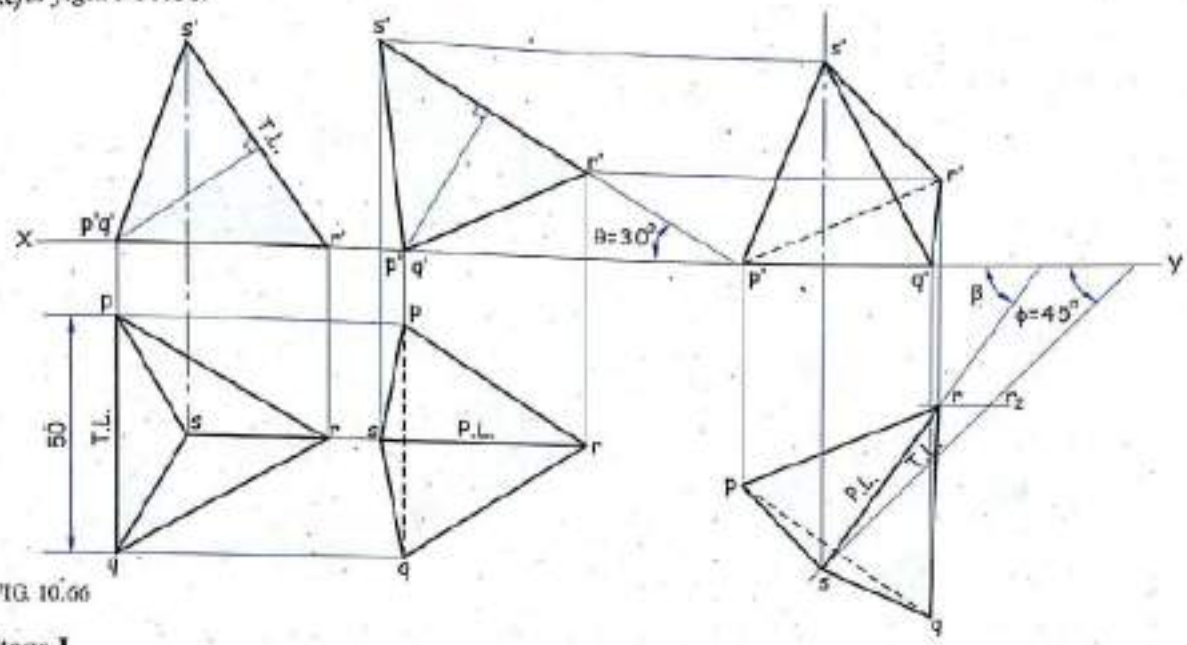

FIG. 10.66

Stage I

1. Since the edge PQ is in the H.P., assume that the equilateral triangular base of the tetrahedron to be in the H.P. and draw the T.V. such that the edge pq is perpendicular to the XY line.
2. Project the F.V.

How to project the F.V. by finding the axis height ?

(i) Draw the projector through apex s. (T.V.)

(ii) With centre r' and radius equal to true length of one of the slant edges (say pq), cut an arc to mark s'. (F.V.)

(iii) Join $p'q'$ and r' to s' which represents F.V.

Stage II

3. Redraw the F.V. of stage Ist such that $r's'$ makes an angle $\theta = 30°$ to the XY line and $p'q'$ on the XY line.
4. Project the T.V. with *care of visibility.*

Stage III

5. As the edge RS makes an angle 30° and 45° with the H.P. and V.P. respectively. Draw the apparent angle β.
6. Fixing plan length P.L. = rs on inclined line (angle β), redraw the T.V. of stage IInd and then project the F.V. with *care of visibility.*

Scanned by CamScanner

Problem 50(a)

A tetrahedron of 45 mm sides has one of its edge in the H.P. and inclined at 45° to the V.P. The triangular plane contained by the edge of a base in the H.P. is perpendicular to the H.P. Draw its projections.

Note : *Tetrahedron is a equilateral triangular pyramid with all six edges equal.*

Solution

Refer figure 10.67 (a).

It is self explanatory.

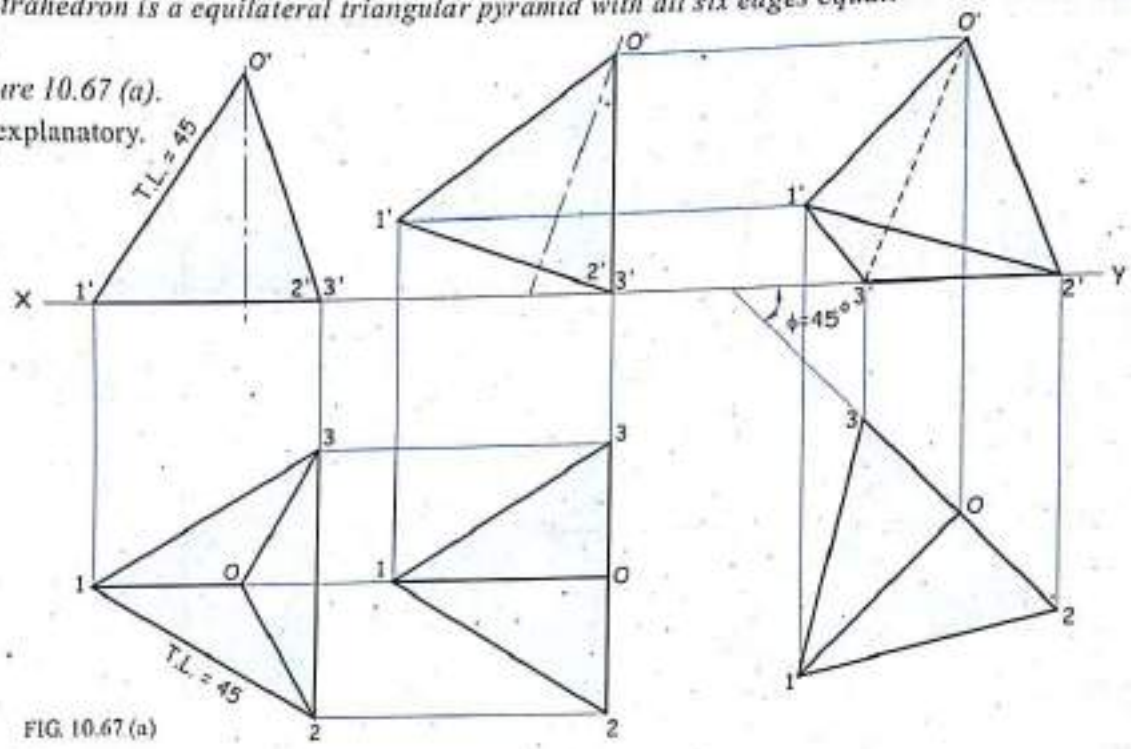

FIG. 10.67 (a)

Problem 51(a)

A tetrahedron of 60 mm side is having one of its edge parallel to the V.P. and inclined at 45° to the H.P., while a face containing that edge is inclined at 30° to the V.P. Draw its projections.

(Jan. '03, M.U.)

Solution : *Refer figure 10.68 (a).* It is self explanatory.

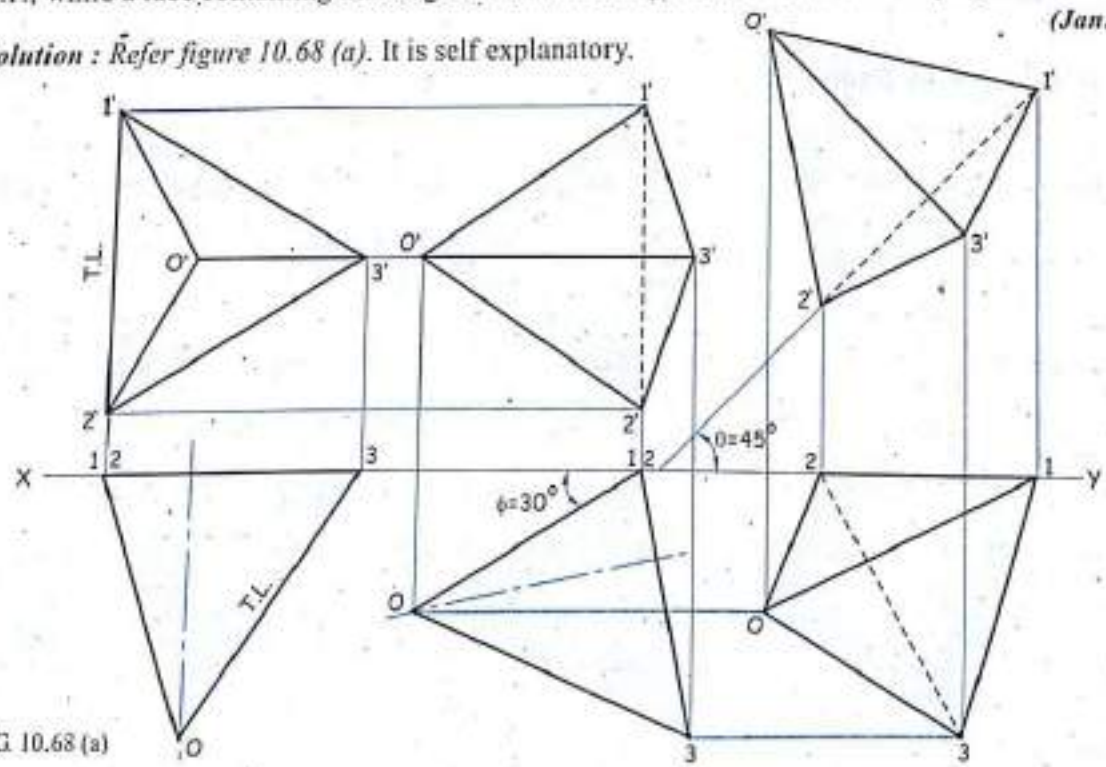

FIG. 10.68 (a)

Scanned by CamScanner

Problem 50(b)

A tetrahedron of 45 mm sides has one of its edge in the H.P. and inclined at 45° to the V.P. The triangular plane contained by the edge of a base in the H.P. is perpendicular to the H.P. Draw its projections.

Note : *Tetrahedron is a equilateral triangular pyramid with all six edges equal.*

Solution

By auxiliary plane method.

Refer figure 10.67 (b).

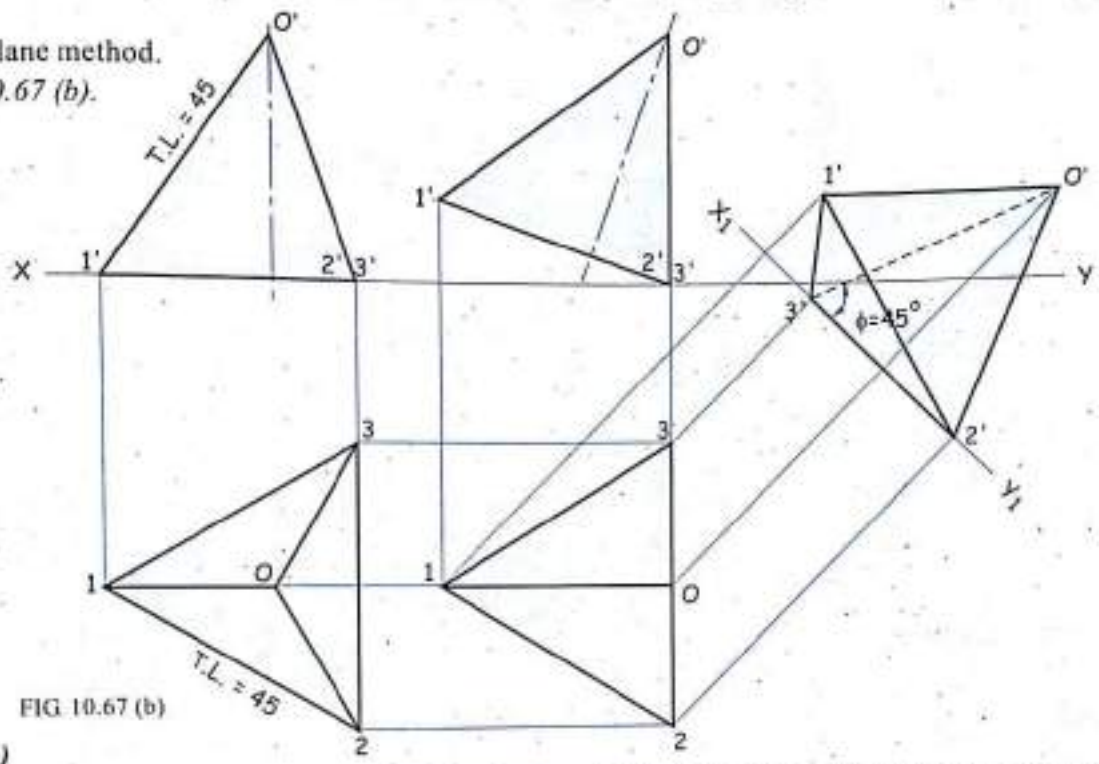

FIG. 10.67 (b)

Problem 51(b)

A tetrahedron of 60 mm side is having one of its edge parallel to the V.P. and inclined at 45° to the H.P., while a face containing that edge is inclined at 30° to the V.P. Draw its projections.

Solution

By auxiliary plane method.

Refer figure 10.68 (b).

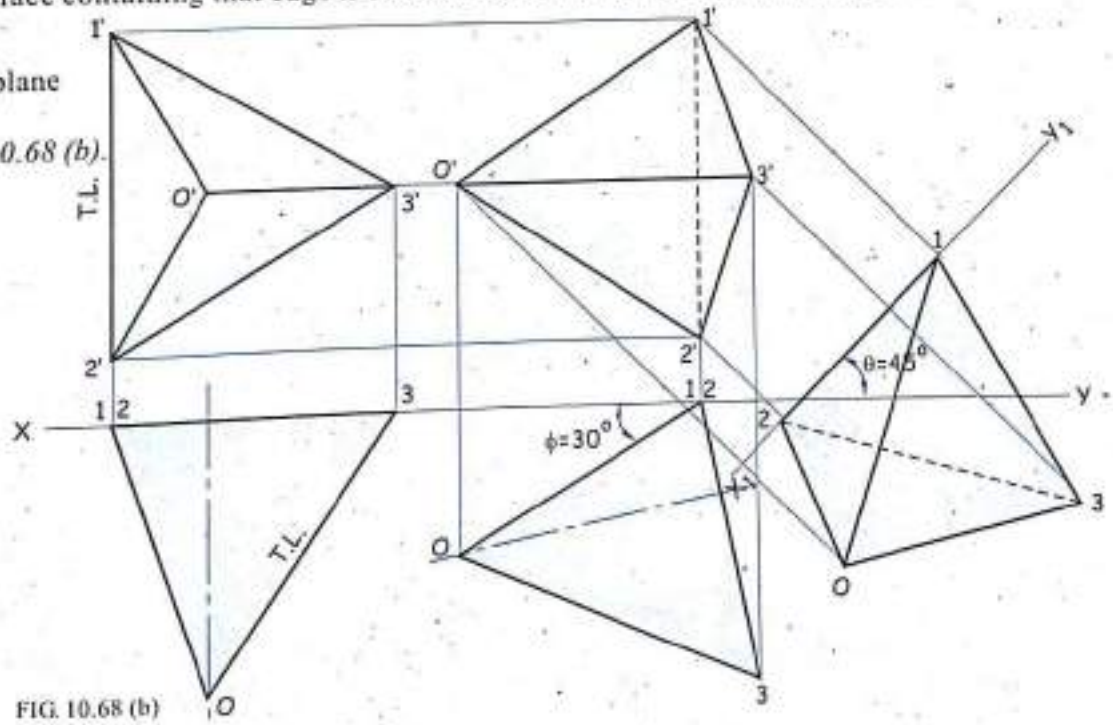

FIG. 10.68 (b)

Scanned by CamScanner

Problem 52

A pentagonal pyramid has an edge of base in the H.P. and inclined at 30° to the V.P. while the triangular face containing that edge makes an angle of 45° with the H.P. Draw the projections of the pyramid when the apex is nearer to the V.P. The length of the side of base of the pyramid is 35 mm and axis length 80 mm. ***(May '98, M.U.)***

Solution : *Refer figure 10.69.* It is self explanatory.

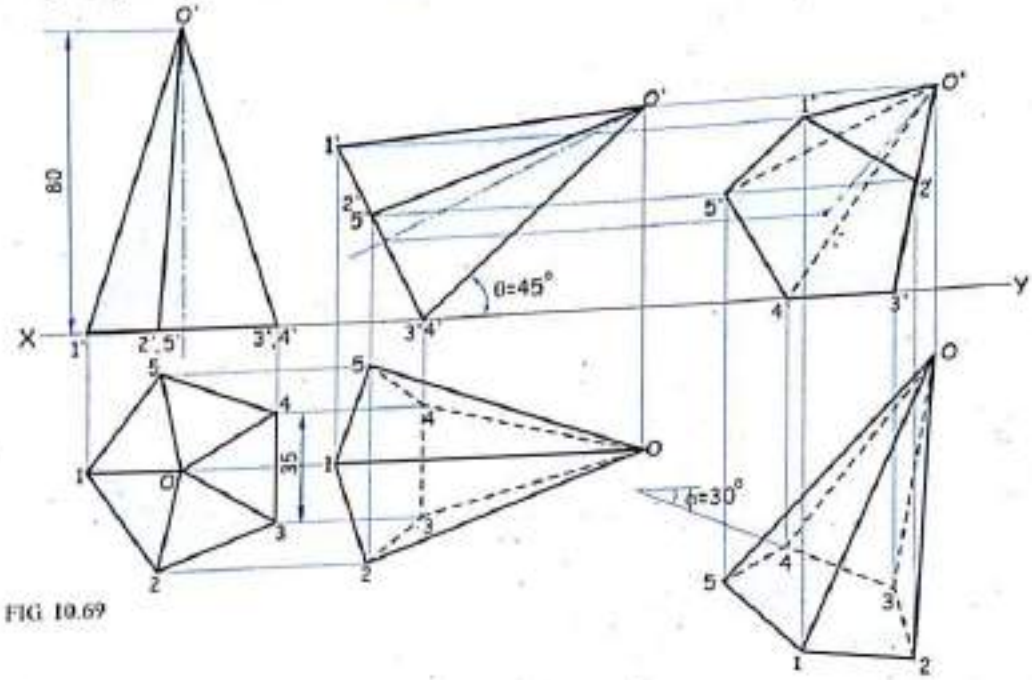

FIG. 10.69

Problem 53

A hexagonal pyramid of 30 mm base edges and axis length 70 mm is having one of its base edge in the H.P. and parallel to V.P. Draw its projections if its apex is in V.P. and 55 mm above H.P. ***(Dec. '98, May '08, M.U.)***

Solution : *Refer figure 10.70.* It is self explanatory.

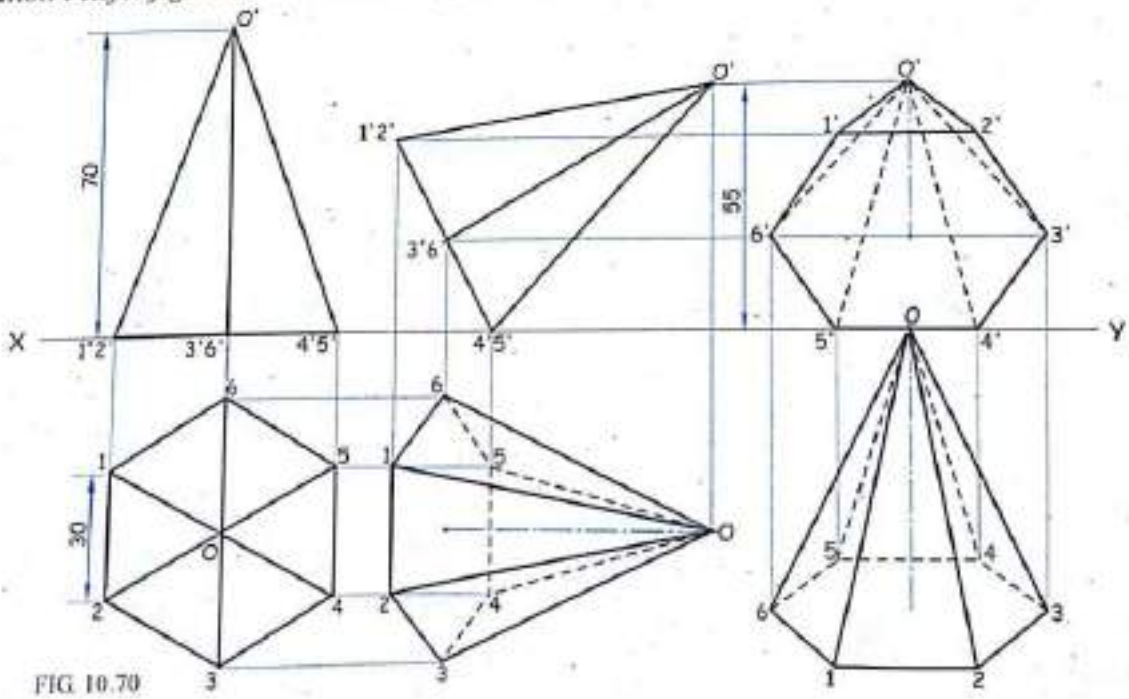

FIG. 10.70

Scanned by CamScanner

Problem 54

A pentagonal pyramid 35 mm base edges and 70 mm height is resting on H.P. with one of its triangular surface perpendicular to H.P. and parallel and nearer to V.P. Draw its projections.

(May '99, M.U.)

Solution : *Refer figure 10.71.* It is self explanatory.

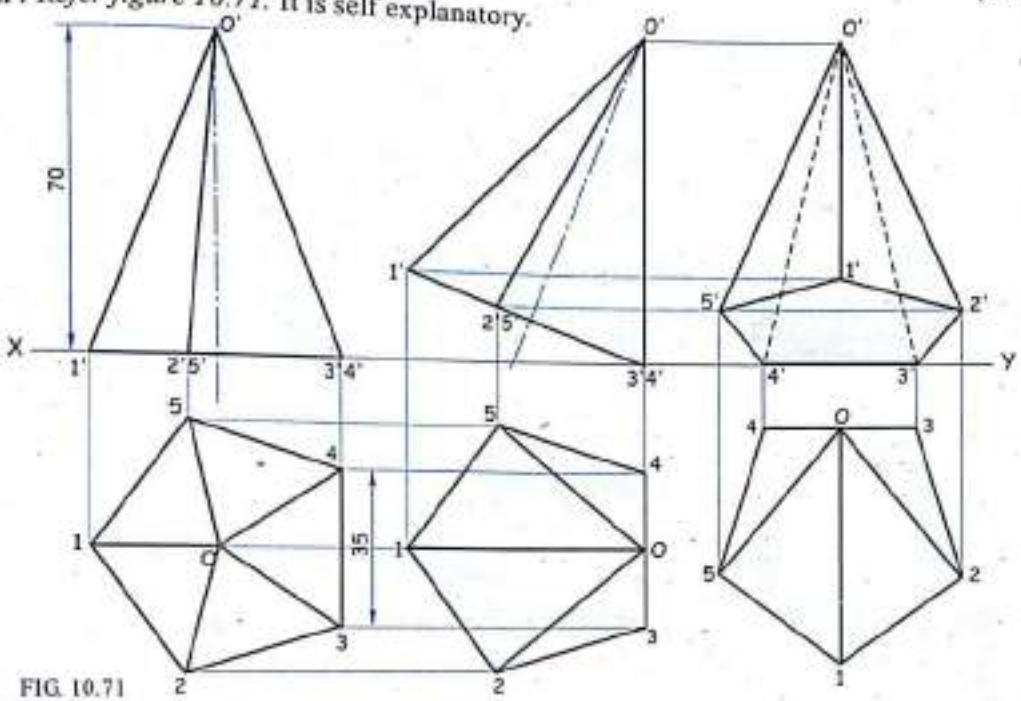

FIG. 10.71

Problem 55

A pentagonal pyramid side of base 35 mm and height 70 mm is having one of its base edge in the V.P. with triangular surface containing this edge perpendicular to V.P. and parallel to H.P. and nearer to the observer. Draw its projections.

(Dec. '99, M.U.)

Solution : *Refer figure 10.72.* It is self explanatory.

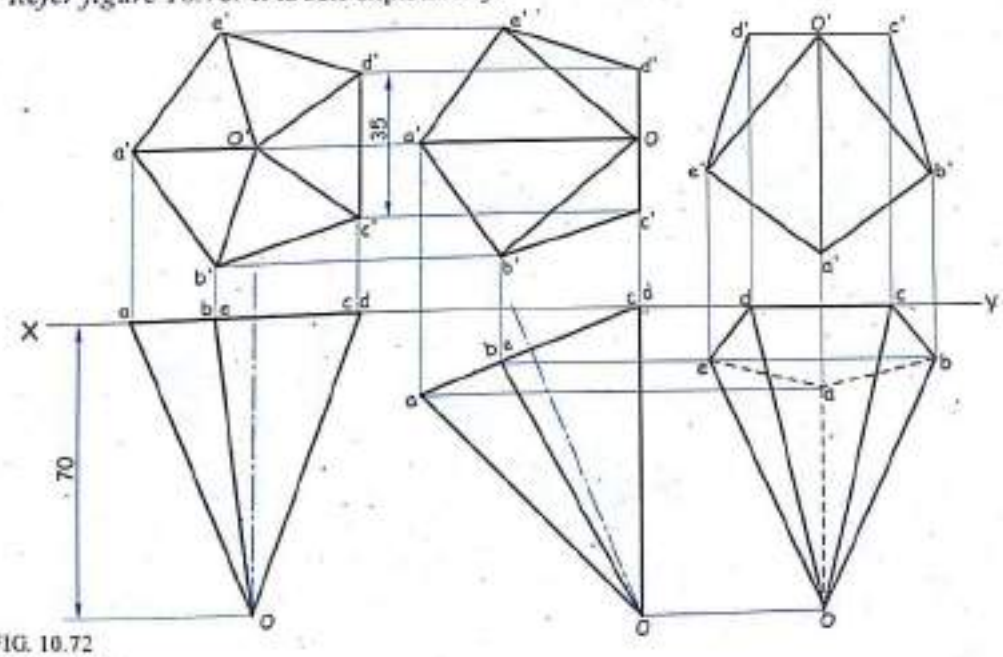

FIG. 10.72

Scanned by CamScanner

Problem 56

A pentagonal pyramid, 40 mm edge of the base and axis height 70 mm is resting on one of its corner of base on H.P. The edge opposite to the corner is parallel to and 45 mm above HP and is parallel to VP. Draw the projections when apex is nearer to observer. ***(July '02, M.U.)***

Solution : *Refer figure 10.73.* It is self explanatory.

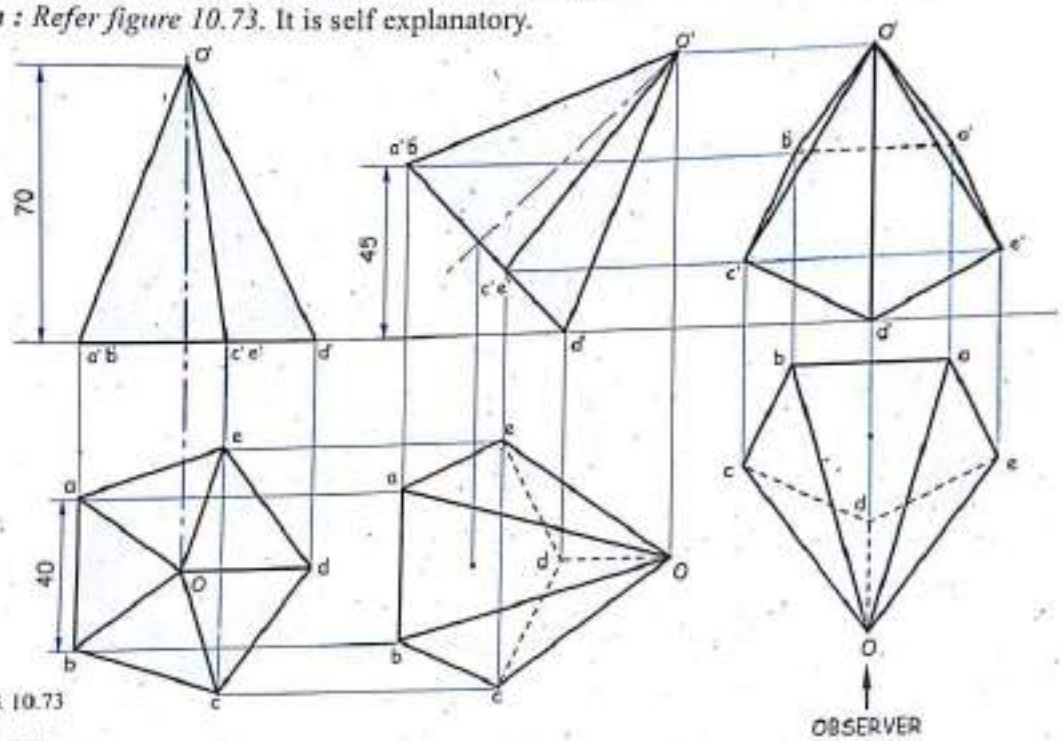

FIG. 10.73

Problem 57

A pentagonal pyramid, 50 mm side of base and 80 mm height, rests on one of its corners of the base on the H.R.P. with axis making an angle of 30° to the H.P. The side of the base, opposite to the corner on the H.R.P., is parallel to the V.P. Draw the projections of the pyramid. ***(June '06, M.U.)***

Solution : *Refer figure 10.74.* It is self explanatory.

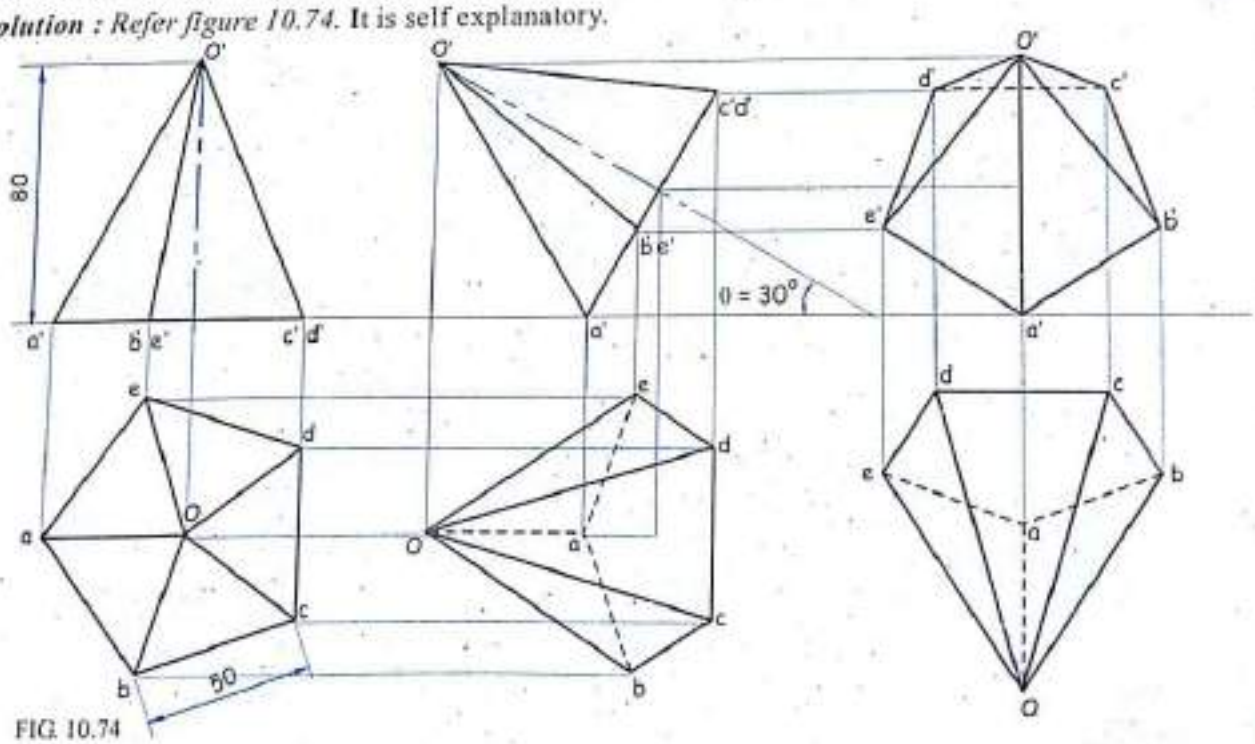

FIG. 10.74

Scanned by CamScanner

Problem 58

A hexagonal pyramid, side of base 30 mm and axis 70 mm long has its triangular slant surface of H.P. with its axis at 50° to V.P. Draw its projections. Assume the apex of hexagonal pyramid towards the observer. ***(Dec. '03, M.U.)***

Solution : *Refer figure 10.75.* It is self explanatory.

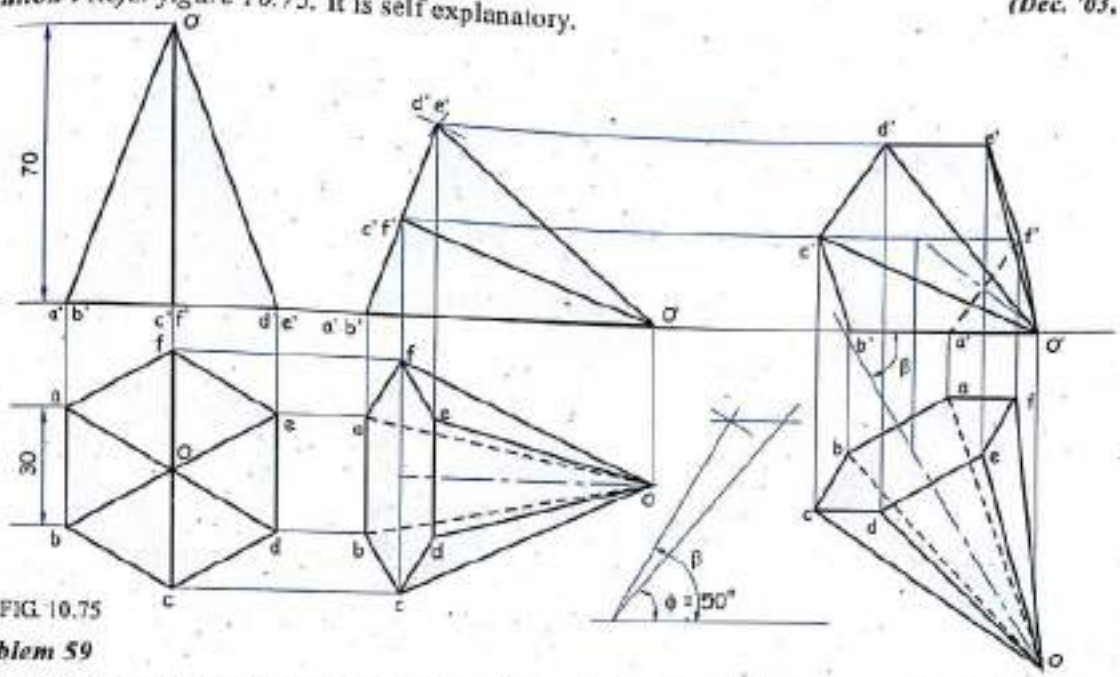

FIG. 10.75

Problem 59

A hexagonal pyramid, base 30 mm side and axis 80 mm long is having one of it's base edge in the H.P. and parallel to V.P. Draw it's projections if it's apex is 50 mm above H.P. ***(Nov. '05, M.U.)***

Solution : *Refer figure 10.76.* It is self explanatory.

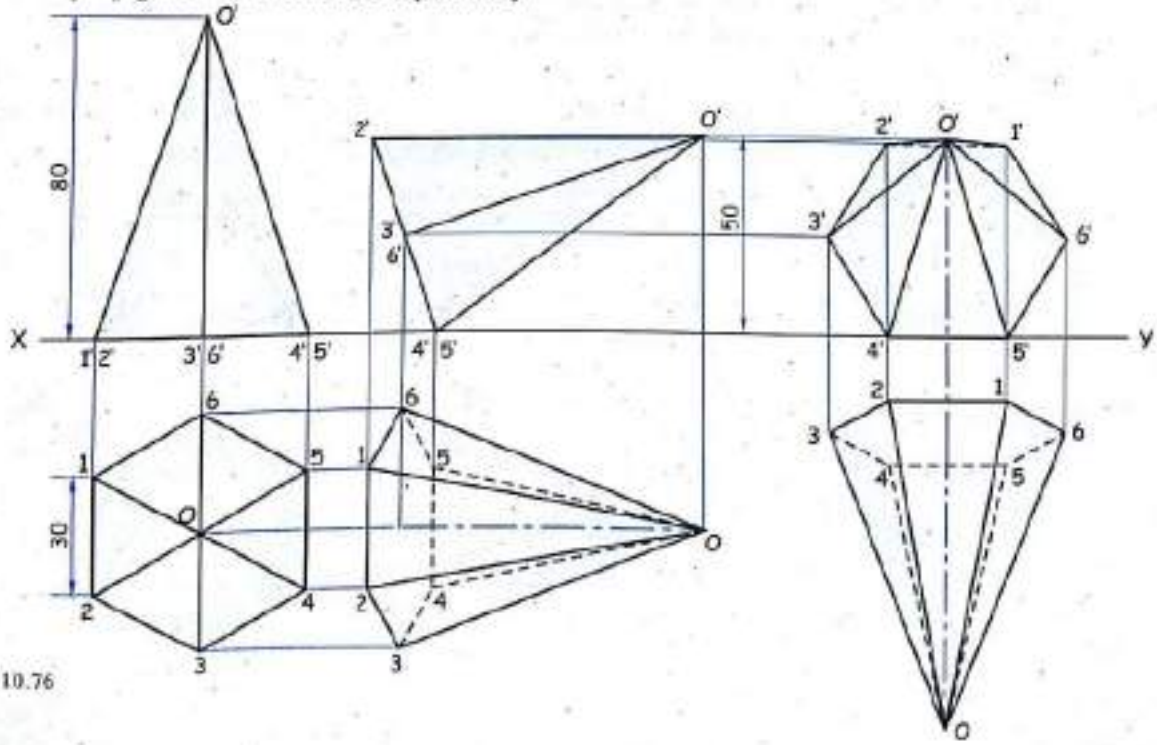

FIG. 10.76

Scanned by CamScanner

Problem 60

A hexagonal pyramid, base side 30 mm and axis length 75 mm, rests on one of its sides of the base in H.P. Draw the projections of the solid when the triangular face containing that base edge, is seen in the elevation as an isosceles triangle of base side 30 mm and altitude 55 mm. ***(June '04, M.U.)***

Solution : *Refer figure 10.77.* It is self explanatory.

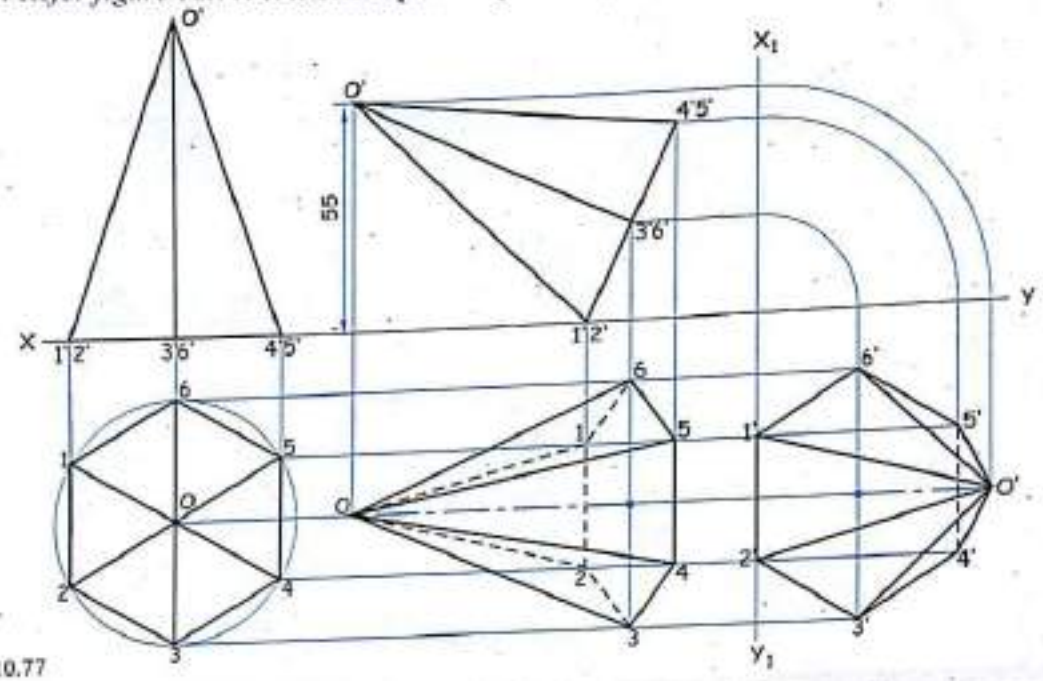

FIG. 10.77

Note : *IIIrd stage is solved by Auxiliary Method.*

Problem 61

A hexagonal pyramid, 25 mm side of base and 55 mm long axis is resting on one of its triangular faces on H.P. Draw its projection of the pyramid when its base edge is in H.P. and is inclined at 45° to the V.P. ***(Dec. '08, M.U.)***

Solution : *Refer figure 10.78.* It is self explanatory.

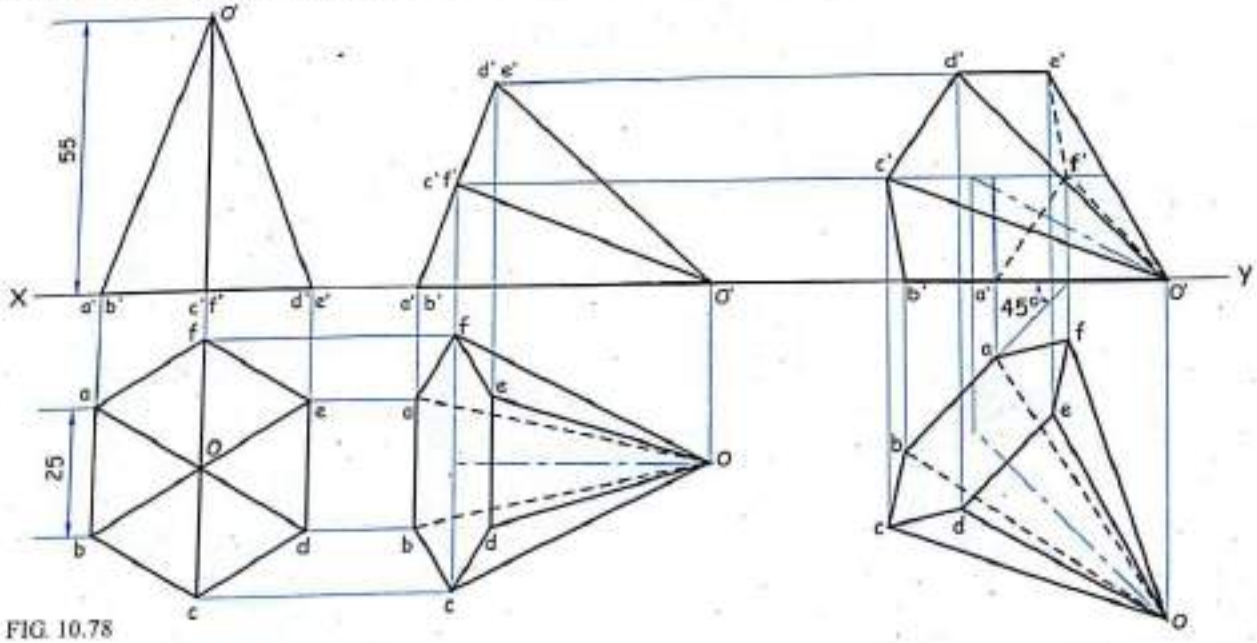

FIG. 10.78

Scanned by CamScanner

Problem 62

A cone of 70 mm length of the axis is resting on one of its generators in the H.P., while its axis is inclined at 40° to the V.P. and the apex is nearer to the observer. Draw the projections of this cone if the generators of the cone are inclined at 60° to the base.

Solution

Refer figure 10.79.

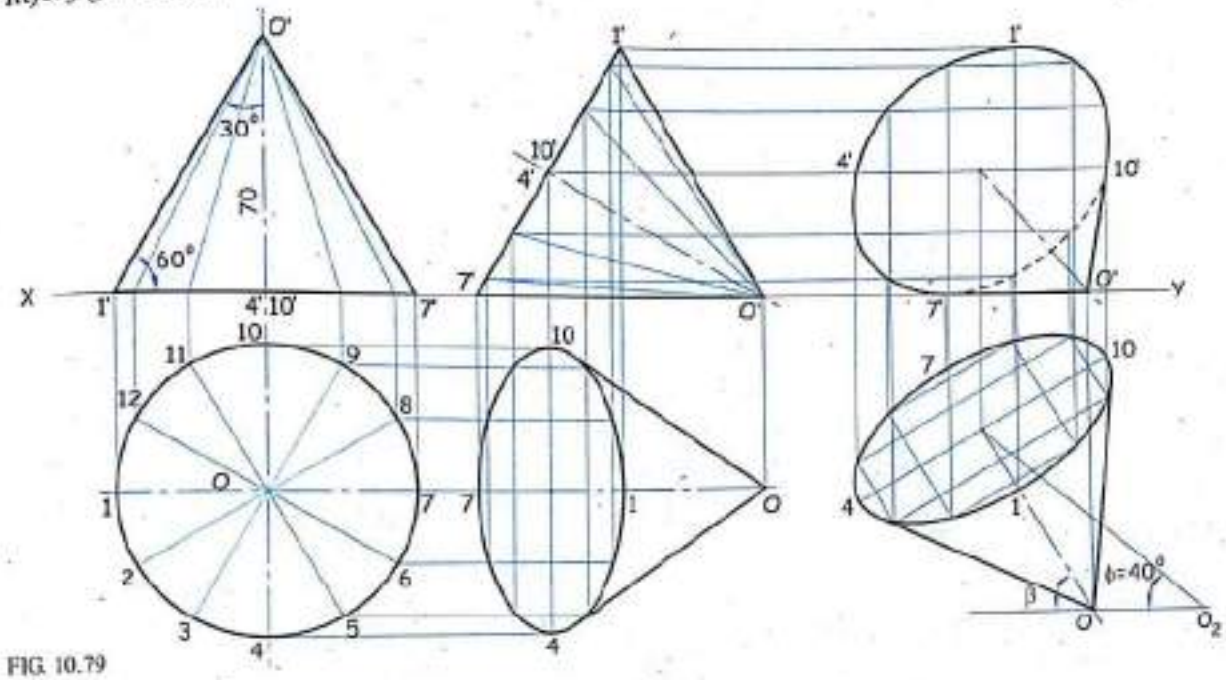

FIG. 10.79

Stage I

1. Since one of the generator is in the H.P. assume the complete base in the H.P.

How to construct the F.V. and the T.V. if axis height (70 mm) and true inclination of the generator of a cone (60°) to the base are given ?

(i) Construct the axis $O'4' = 70$ mm in the F.V.

(ii) Draw an inclined line at 30° from apex O' with axis and mark $1'$ by drawing horizontal line through $4'$.

(iii) $1'4'$ is the required radius of base of cone.

(iv) Draw the F.V. and the T.V. as shown.

Stage II

2. Redraw the F.V. of stage I^st^ such that the generator $O'7'$ lies on the XY line (i.e. on the H.P) and project the T.V. with *cone of visibility.*

Stage III

3. Since the axis is inclined to the V.P. at 40° construct the apperent angle β and redraw the T.V. of stage IInd fixing the plan length (P.L.) of an axis on angle β with apex away from XY (nearer to observer).

4. Project the F.V. with *care of visibility.*

Scanned by CamScanner

Problem 63

A cone of base 60 mm diameter and axis 66 mm long is lying on one of its generator on the V.P. with its F.V. of an axis making an angle at 50° with the H.P. Draw its projections considering the apex nearer to observer.

Solution : *Refer figure 10.80.* It is self explanatory.

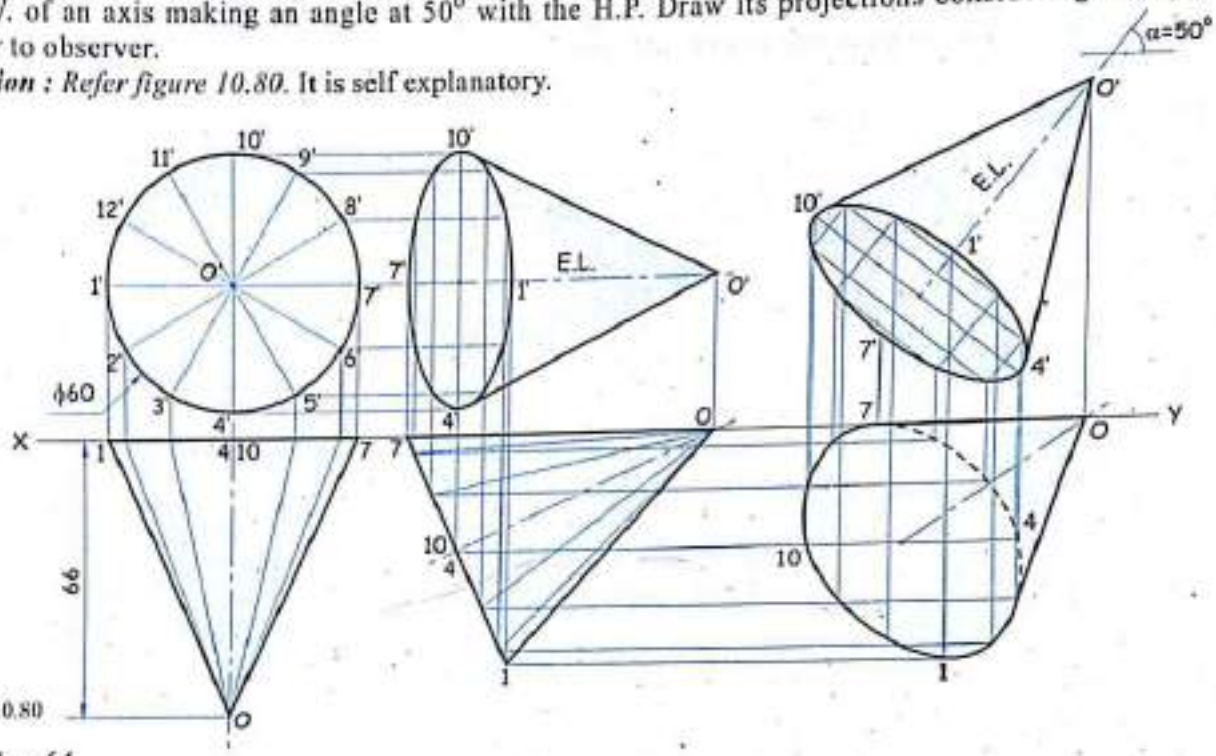

FIG. 10.80

Problem 64

A right circular cone of a base circle 60 mm and height 70 mm is suspended by a string attached to the mid-point of any one of its generators. If the top view of an axis makes an angle 30° to the V.P. and apex away from the V.P. draw its projections.

Solution : *Refer figure 10.81.* It is self explanatory.

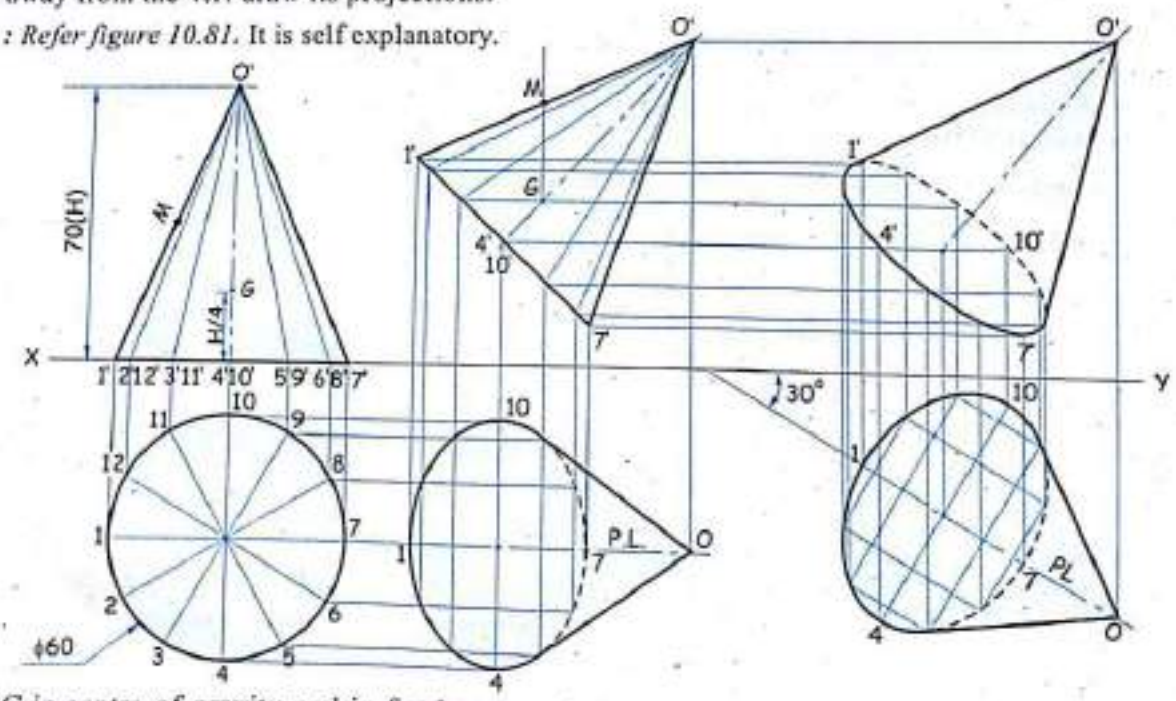

FIG. 10.81

Stage II : *G* is centre of gravity and in freely suspended condition line passing through *G* and *M* will be perpendicular to the H.P.

Scanned by CamScanner

Problem 65

Draw the projections of the cone, base 50 mm diameter and axis 75 mm long, having one of its generations in the V.P. and inclined at 30° to the H.P. The apex is in the H.P. *(May '03, M.U.)*

Solution : *Refer figure 10.82.* It is self explanatory.

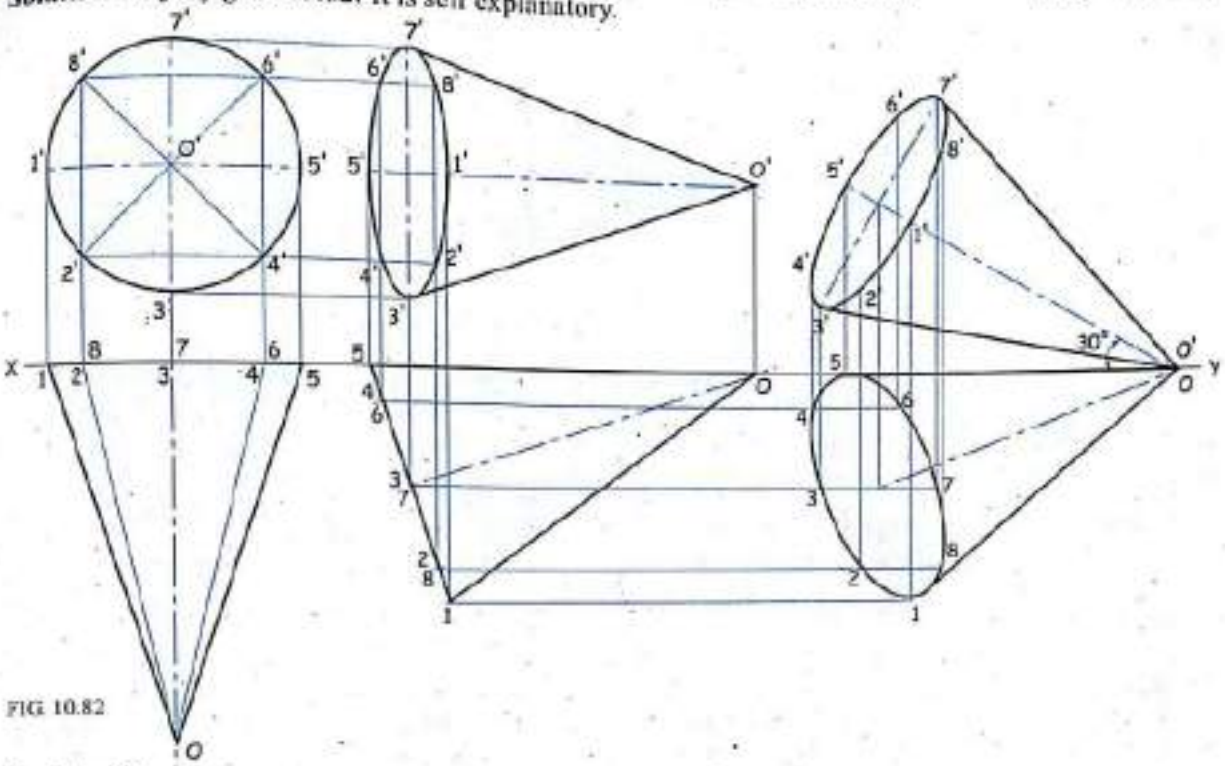

FIG. 10.82

Problem 66

A cone of base diameter 50 mm and axis 70 mm long is lying on one of it's generator on the H.P. with top view of axis making an angle of 45° with the *XY*-line. Draw it's projections. *(June '05, M.U.)*

Solution : *Refer figure 10.83.* It is self explanatory.

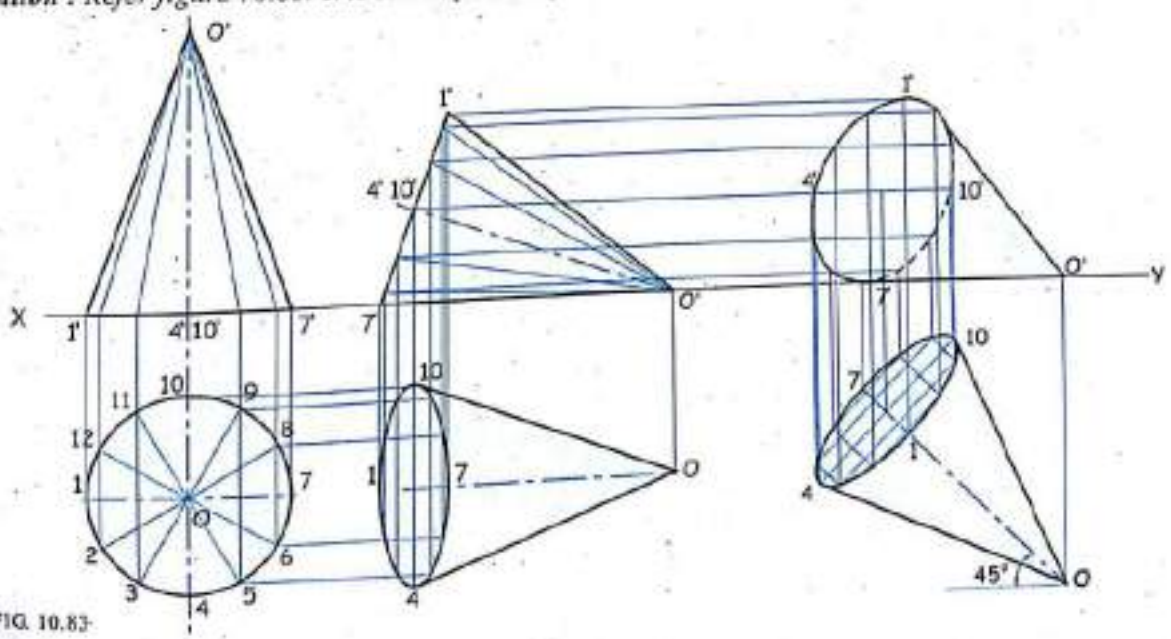

FIG. 10.83

Scanned by CamScanner

Problem 67

A right circular cylinder diameter of base 50 mm and axis height 70 mm has one of the circumference point of base in the H.P. such that its axis is inclined at 30° to the H.P. and the axis appears to be inclined at 45° to the V.P. in the T.V. Draw its projections.

Solution : *Refer figure 10.84.*

Stage I

1. Since one of the circumference point of base of a cylinder is in the H.P., assume that the complete base is in the H.P. and draw the T.V. as a circle of diameter 50 mm.
2. Project the F.V. with axis height 70 mm.

Stage II

3. Redraw the F.V. of stage I^st^ such that the axis is inclined at θ = 30° to *XY* and then project the T.V. with *care of visibility.*

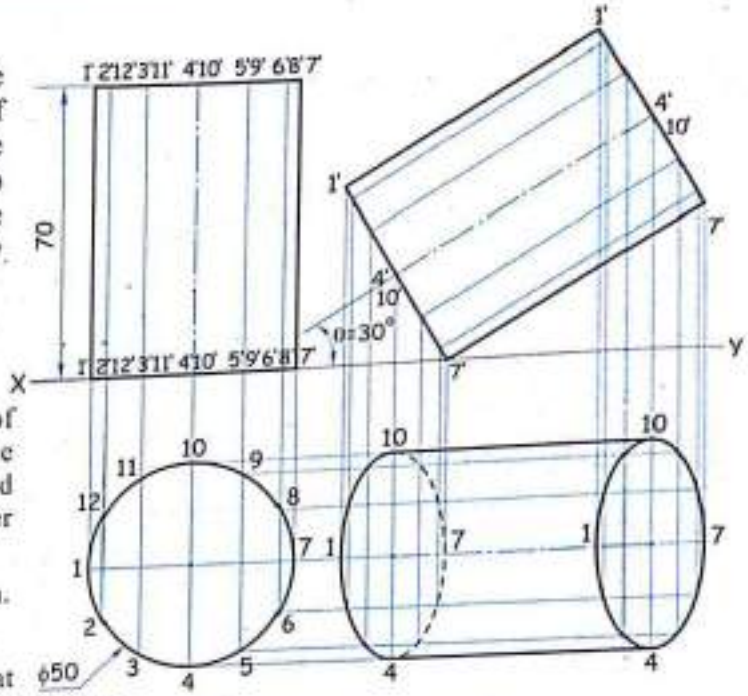

FIG. 10.84

Problem 68

A cone, base 50 mm diameter and axis 60 mm long rests on its circular rim on the H.P. with the axis making an angle of 30° with the H.P. and its top view making an angle of 45° with the V.P. Draw its projections if apex is nearer to observer. ***(May '09, M.U.)***

Solution : *Refer figure 10.85.* It is self explanatory.

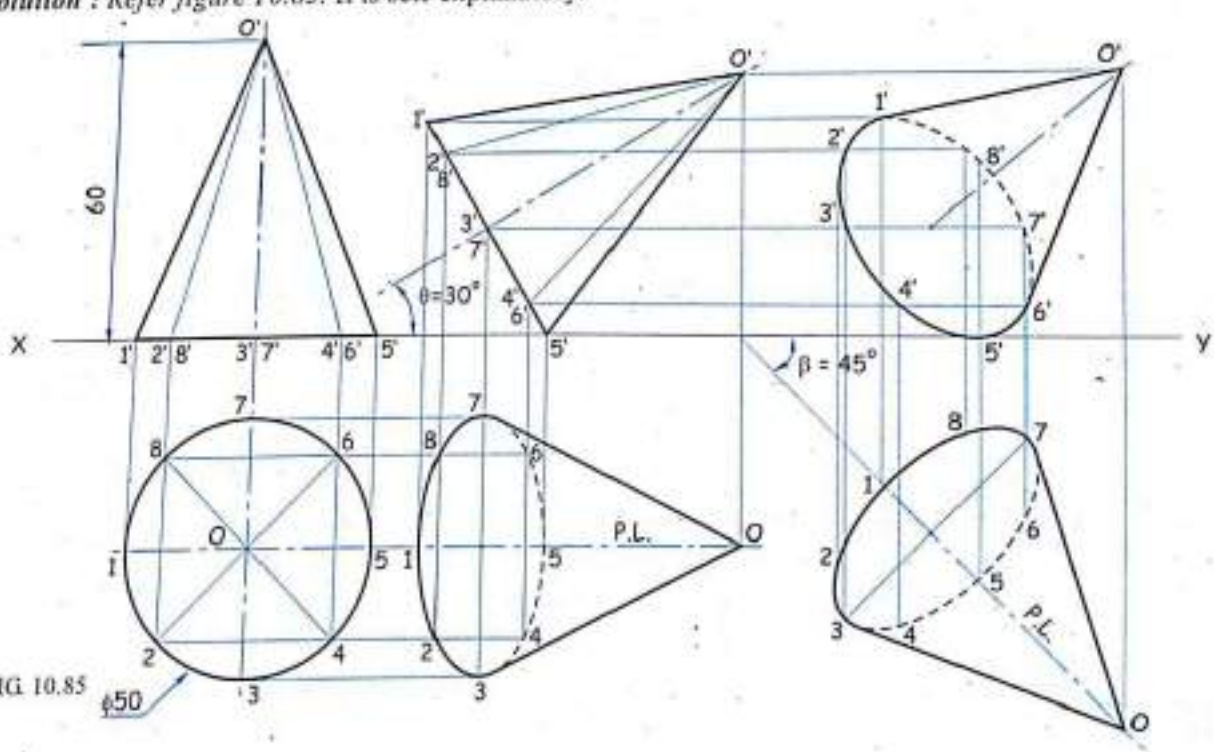

FIG. 10.85

Scanned by CamScanner

Problem 69

A cone, base 50 mm diameter and axis 60 mm long rests on its circular rim on the H.P. with the axis making an angle of 30° with the H.P. and its top view making an angle of 45° with the V.P. Draw its projections if apex is away to observer.

(Dec. '09, M.U.)

Solution : *Refer figure 10.86.* It is self explanatory.

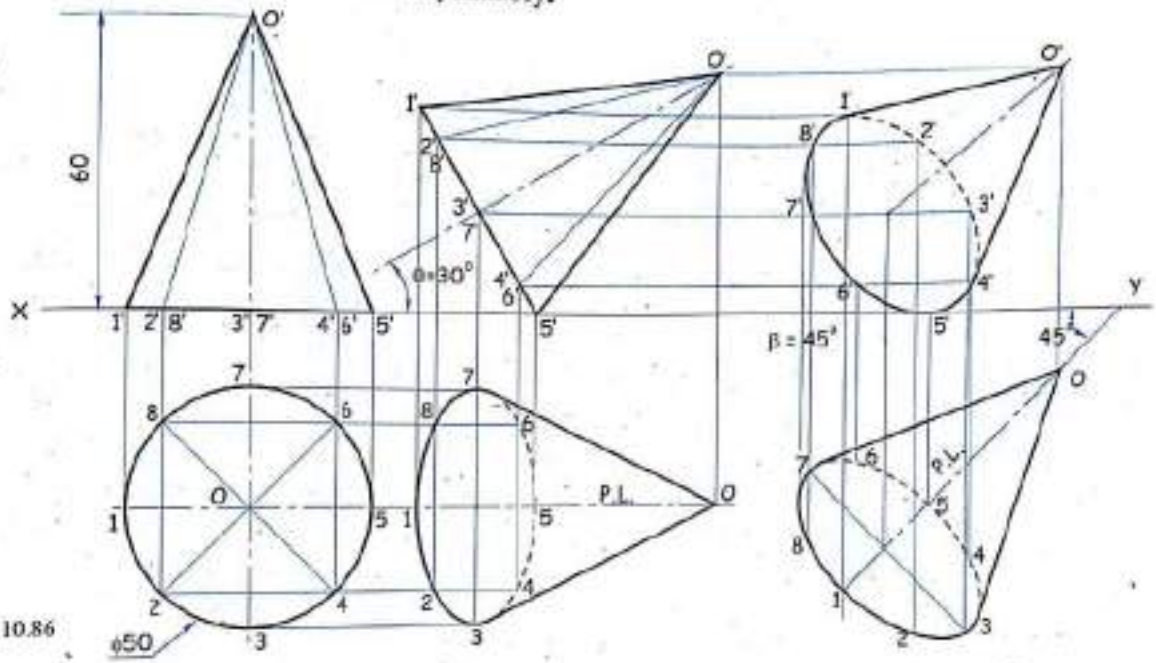

FIG. 10.86

Problem 70

A hexagonal pyramid of base edge 30 mm and axis 80 mm long has one of its triangular face 45° to V.P. Draw projections when the base edge of that triangular face is inclined at 50° to H.P. and parallel to V.P.

(May '16, M.U.)

Solution : *Refer figure 10.87.* It is self explanatory.

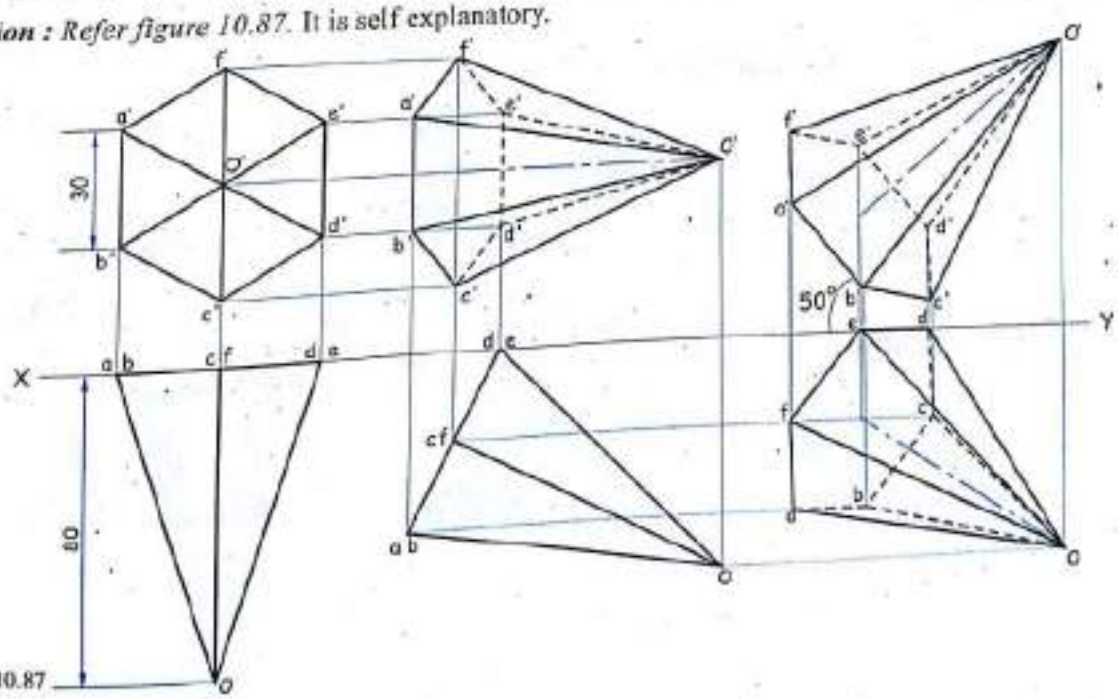

FIG. 10.87

Scanned by CamScanner

Problem 71

A right circular cone of base diameter 70 mm and axis length 65 mm is having its apex 25 mm above H.P. and in the V.P. Draw the projections when the solid is resting on V.P. on one of its generators.

(May '11, M.U.)

Solution : *Refer figure 10.88.* It is self explanatory.

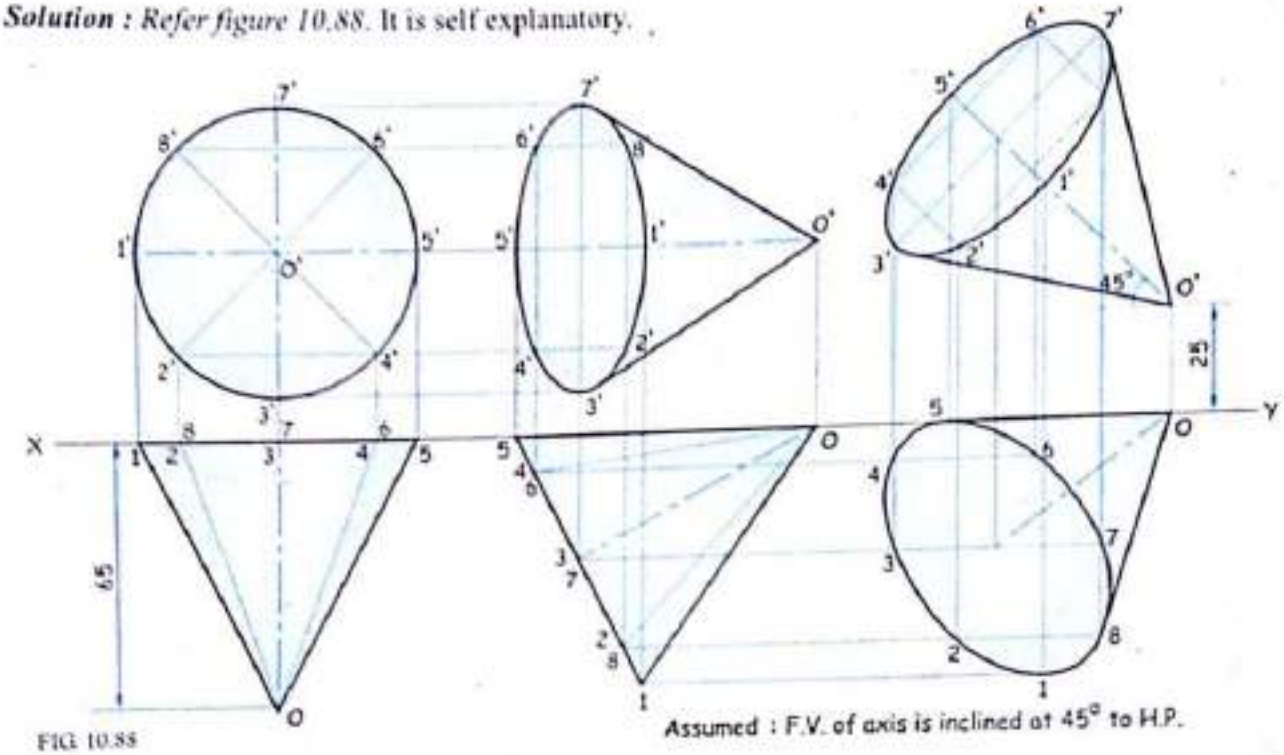

FIG. 10.88

Problem 72

A square pyramid of 30 mm edge of base and 60 mm length of axis is having an edge of base inclined at 45° to the H.P. and in the V.P. Draw projections if the triangular face containing that edge is inclined at 30° to the V.P.

(May '12, M.U.)

Solution : *Refer figure 10.89.* It is self explanatory.

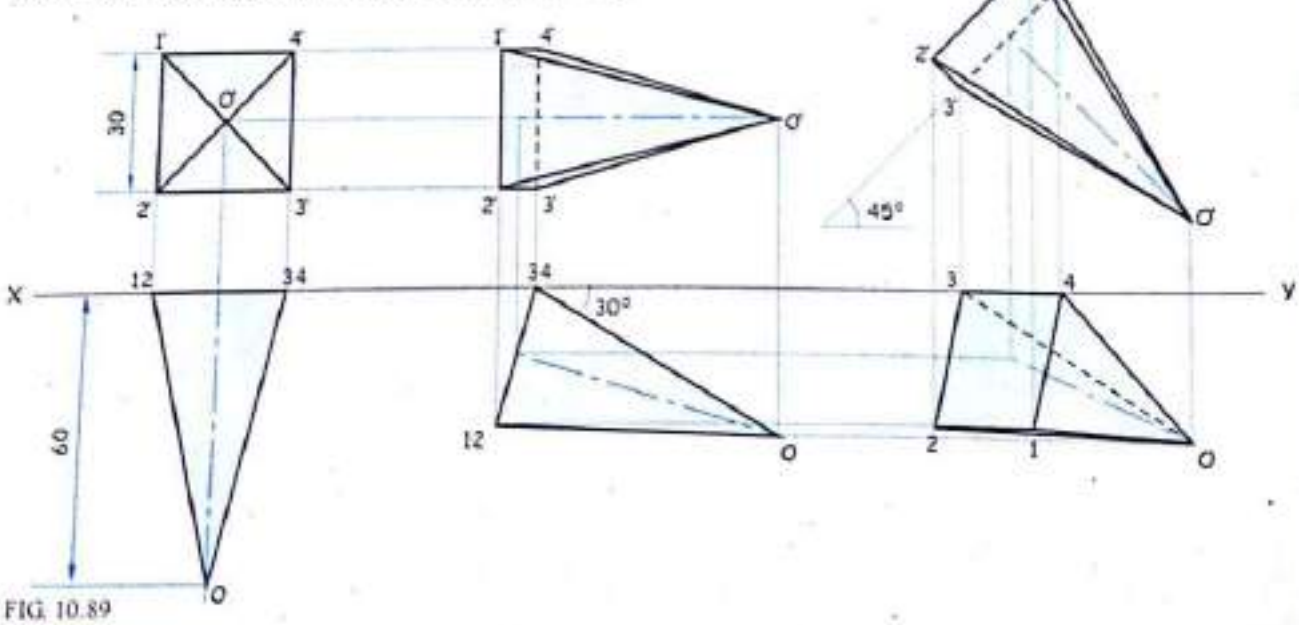

FIG. 10.89

Scanned by CamScanner

10.7 Exercise

Triangular Prism

1. An equilateral triangular prism of 40 mm edge of base and 60 mm length of axis has a 60 mm long edge on the H.P. A rectangular face containing that edge is inclined at 45° to the H.P. Draw the projections.
2. Draw the projections of a triangular prism, base 50 mm side and axis 60 mm long rests on a corner of the base on the H.P. such that the base edges passing through the corner on which the prism rests are equally inclined to the H.P., and the base of a prism is inclined at 45° to the H.P.
3. A triangular prism of 40 mm side of base and height 60 mm is suspended freely from the corner. Draw its projections.

Square Prism

4. Draw the projections of a square prism of 30 mm side of base and height 60 mm rests with one of its corners on the H.P. such that two of the base edges containing the corner on which the prism rests are equally inclined to the H.P. the axis is inclined at 30° to the H.P. Draw its projections.
5. A square prism of 28 mm edge of base and 65 mm length of an axis stands on one edge of the base on the H.P. The axis is inclined at 30° to the H.P. Draw its projections.
6. A square prism, side of base 40 mm and axis 75 mm is resting on one of the corners of its base on the H.P. Draw the projections of a prism when one of its solid diagonal is parallel to the H.P.
7. A square prism of 40 mm side of square faces and 75 mm long is suspended freely from a corner. Draw the top view and front view of an prism.

Cube

8. A cube of 50 mm side rests on the H.P. such that one of its edge is in the V.P. One of the faces containing that edge makes an angle of 40° with the V.P. Draw the top and front views.
9. A cube of 40 mm edges has one of its corner on the H.P. The solid diagonal passing through that corner is inclined at 45° to the H.P. Draw the projections.
10. A cube of 50 mm is suspended by a string attached to one of its corner. Draw the top and front views of a cube.
11. A cube of 60 mm sides is resting on the H.P. on one of its corner, with one of the solid diagonal parallel to the H.P. and inclined at 45° with the V.P. Draw the projection of a cube.

Pentagonal Prism

12. A pentagonal prism, edge of base 30 mm, length of an axis 65 mm has one edge of its base on the H.P., and the axis is inclined at 45° to the H.P. Draw the three views.
13. A pentagonal prism of 30 mm side of base and height 60 mm is suspended freely from the corner. Draw its top and front views.
14. A pentagonal prism of 30 mm side of base and height 60 mm is resting on a corner of its base on the H.P. with a longer edge contaning that corner inclined at 45° to the H.P. Draw its projections.

Hexagonal Prism

15. A hexagonal prism, edge of base 25 mm axis 60 mm length has an edge of the base on the H.P. and rectangular face containing that edge is inclined at 45° to the H.P. Draw the projections.
16. A hexagonal prism base 40 mm side and axis 75 mm long has an edge of the base parallel to the H.P. Its axis makes an angle of 60° to the H.P. Draw its projections.
17. A hexagonal prism 25 mm base side and 60 mm axis is resting on one of its corner of base on the H.P. and axis is inclined at 30° to the H.P. Draw the projections.

Scanned by CamScanner

Triangular Pyramid

18. An equilateral triangular pyramid edge of base 40, length of an axis 60 stands on one edge of the base on the H.P. in such a way that the base makes an angle of 60° to H.P. and the edge on which it rests is inclined at 30° to the V.P. Draw the projections.
19. A triangular pyramid, having an edge of the base 44 mm, axis 60 mm has one edge of the base on the H.P., inclined at 45° to the V.P. and the apex of the pyramid is 30 mm above the H.P. Draw the projections.
20. An equilateral triangular pyramid sides of base 40 mm and height 65 mm stands on the corner of its base on the H.P., the base being tilted up until the apex is 40 mm above the H.P. Draw the projections of the pyramid when the base edge opposite to the corner on which it rests is parallel to the V.P. and the apex of the pyramid points towards the V.P.
21. A triangular pyramid side base 50 mm and axis 70 mm long rests on one of its side of the base so that the axis is inclined at 30° to the H.P., 45° to the V.P. Draw the front view and top view.
22. A pyramid whose base is an equilateral triangle of sides 30 mm and axis 50 mm long is suspended freely from the corner of its base. Draw the projections of a pyramid when it is tilted such that the top view of an axis is inclined at 30° to the V.P. and the base is nearer to the V.P. than its apex which is to lie on the right side.
23. An equilateral triangular pyramid of 50 mm edge of base and 65 mm length of an axis has one of its slant edge on the H.P. and the plane containing the slant edge and the axis is perpendicular to the H.P. and inclined at 45° to the V.P. Draw the projections.
24. A tetrahedron of 50 mm edges has one edge on the H.P. inclined at 30° to the V.P. while one triangular face containing this edge is inclined at 45° to the H.P. Draw the three views of a tetrahedron.
25. A tetrahedron of 75 mm long edges has one edge parallel to the H.P. and inclined at 45° to the V.P. Draw the projections if the face containing this edge is vertical.
26. A tetrahedron of 50 mm edges has one of its edges on the H.P. inclined at 45° to the V.P. A triangular face containing that edge is inclined at 60° to the H.P. Draw the three views of a solid.

Square Pyramid

27. A square pyramid, edge of base 40 mm, lenght of an axis 60 mm stands on one of its triangular face on the H.P. and the shorter side of that face is inclined at 45° to the V.P. Draw the projections of a pyramid.
28. A square pyramid of 40 mm base side and 70 mm axis is freely suspended from one of its corner of base. Draw the three views if the vertical plane through the axis is inclined at 45° to the V.P.
29. A square pyramid of 30 mm edge of base and 50 mm length of axis has one of its slant edge on the H.P. and the plane containing this edge and the axis is perpendicular to the H.P. and inclined at 30° to the V.P. Draw three views of the pyramid.
30. A square pyramid of 40 mm edge of base and 60 mm length of an axis stands on an edge of the base on the H.P. inclined at 45° to the V.P. while the axis is inclined at 30° to the H.P. Draw the projections, if the apex is away from the observer.
31. A square pyramid having base of 50 mm side and height 75 mm is held such that one of its edge connecting one of the corner of the base and the apex is perpendicular to the H.P. and parallel to the V.P. Draw its top and front views.
32. A pyramid whose base is a square 40 mm side and height 70 mm rests with its apex on the H.P. such that one of the base corner is exactly above the apex of a pyramid. Two of the base edges containing this corner make an equal inclination with both the H.P. and the V.P. Draw its projections when the slant edge opposite to the vertical slant edge appears perpendicular to the V.P.

Scanned by CamScanner

33. A square pyramid edge of base 45 mm axis 60 mm has one edge of base in the V.P. inclined at 45° to the H.P. and the apex is in the H.P. and 30 mm in front of the V.P. Draw the projections.

34. A square pyramid base edge 50 mm, axis 60 mm is suspended by a string tied to one of the corner of the base. The axis of a pyramid is inclined at 30° to the V.P. Draw the projections.

35. The frustum of a square pyramid base 50 × 50 top 20 × 20 height 38 mm stands on one of its slant surfaces on the H.P. and the axis is inclined at 45° to the V.P. Draw its projections.

Rectangular Pyramid

36. A right rectangular pyramid, base 40 mm × 30 mm and height 70 mm rests with one of its slant edges on the H.P. such that the two triangular faces containing the slant edge on which it rests make an equal inclination with the H.P. The top view of an axis is inclined at 60° to the V.P. The apex of a pyramid is nearer to the V.P. then its base is on its right side. Draw the top and front views of a pyramid.

Pentagonal Pyramid

37. A pentagonal pyramid, edge of base 30 mm, length of axis 60 mm stands on one edge of base on the H.P., inclined at 45° to the V.P. while the axis is inclined at 60° to the H.P. Draw the projections of a pyramid.

38. Draw the projections of a pentagonal pyramid having side of base 30 mm and length of an axis 80 mm when it is resting with a triangular face in the V.P. and the base of that face inclined at 50° to the H.P.

39. A pentagonal pyramid, edge of base 35 mm, length of axis 65 mm has one of its slant edge perpendicular to the H.P., while the plane containing that edge and the axis is inclined at 60° to the V.P. Draw the three views of a pyramid.

40. A pentagonal pyramid of base 40 mm side and height 80 mm rests on one of its trangular faces on the H.P. The top view of an axis is inclined to the V.P. at 30°. Its apex is nearer to the V.P. Draw its projections.

41. A right regular pentagonal pyramid of 50 mm base sides and height 90 mm is lying on one of its triangular surfaces on the ground, such that the top view of an axis is inclined at an angle of 45° to the V.P. Draw its front view and top view when the apex of a pyramid is nearer to the V.P.

42. A pentagonal pyramid of 30 mm edge of base and 60 mm length of an axis has one edge of base in the V.P. inclined at 30° to the H.P., while the apex of a pyramid is 25 mm from the V.P. Draw the projections.

43. A pentagonal pyramid side of base 35 mm and axis 70 mm long is lying on one of its corner on ground such that the two base edges passing through the corner on which it rests makes an equal inclination with the ground. One of its triangular surface is parallel to the H.P. and perpendicular to the V.P. and the base edge containing that triangular surface is parallel to both the H.P. and the V.P. Draw the projections of a solid when the apex of a pyramid is nearer to the observer.

44. A pentagonal pyramid of base side 30 mm and height 65 mm rests on the H.P. on one of its slant edge and its axis appears to be inclined at 45° to the V.P. in the top view. Draw its top and front views.

45. A pentagonal pyramid of side of base 30 mm and height 65 mm stands on an edge of its base on the ground which is parallel to the H.P. and inclined at an angle of 30° to the V.P. The triangular face contained by that edge is inclined at an angle of 45° to the H.P. Draw the front view and top view of a pyramid.

46. A pentagonal pyramid of 35 mm side of base and 65 mm axis length, rests on one of its side of base on the ground, parallel to the V.P. and parallel to the H.P. The axis is inclined at 30° to the H.P. Draw the front view and top view.

Scanned by CamScanner

47. A pentagonal pyramid of 40 mm side of base and 75 mm axis length, having one of its triangular face in the V.P. so that its axis is inclined at an angle of 45° to the H.P. Draw the front view and top view.

48. A pentagonal pyramid of 30 mm edge of base and 60 mm axis height is lying on one of its triangular surface in the V.P. so that the axis is inclined at an angle of 45° to the H.P. Draw its front view and top view.

49. The frustum of a pentagonal pyramid having bottom base edge 50 mm and top base edge 30 mm and height 65 mm rests on the H.P. on one of its trapezoidal face with its axis inclined at 40° to the V.P. and the top face nearer to the observer. Draw the top and front views of a frustum by the auxillary plane method.

50. A pentagonal pyramid of 30 mm edge of base and 60 mm length of an axis has one of its triangular faces in the V.P. The shorter edge of that face is inclined at 60° to the H.P. Draw the three views of a pyramid.

51. A pentagonal pyramid edge of base 30 mm, axis 55 mm has one corner of base on the H.P. The two edges of base passing through this corner are equally inclined to the H.P. The triangular face opposite this corner is parallel to the H.P. and perpendicular to the V.P. The edge of base contained by the triangular face is parallel to the V.P. The apex is nearer to the observer.

Hexagonal Pyramid

52. A hexagonal pyramid, edge of base 30 mm and axis 70 mm has one of its triangular face on the H.P. and the plan of an axis is inclined at 60° to the *XY* line. The apex is away from the observer. Draw the projections.

53. A hexagonal pyramid of base sides 30 mm and axis 65 mm long is lying on the V.P. on one of its slant edge. A plane containing this edge and axis is perpendicular to the V.P. and inclined at 45° to the H.P. In this position, draw the projections of a pyramid when the vertex of a pyramid is pointing upwards.

54. A hexagonal pyramid of 25 mm edge of base and 55 mm length of an axis has one edge of base in the V.P. inclined at 30° to the H.P. The triangular face containing that edge is inclined at 45° to the V.P. Draw the projections.

55. A hexagonal pyramid has base edges 40 mm long and height 90 mm. It lies with one of its triangular face on the H.P. with the centre line of a face at 45° to the vertical plane. The apex being 30 mm behind the vertical plane. Draw the top and front views of a pyramid.

56. A hexagonal pyramid edge of base 30 mm, axis 60 mm is resting on its base with an edge of the base parallel to the V.P. and nearer to the observer. The pyramid is tilted on this base edge towards the observer until the apex height is 40 mm. Draw its projections, measure the inclination of an axis with the H.P.

57. A hexagonal pyramid, base 25 mm side and axis 50 mm long has one of its slant edge on the H.P. A plane containing that edge and the axis is perpendicular to the H.P. and inclined at 45° to the V.P. Draw its projections when the apex is nearer to the V.P. and then to the base.

58. A hexagonal pyramid of 25 mm base side and 70 mm axis is resting on one of its triangular face on the H.P. and axis is inclined at 30° to the V.P. Draw the projections if the apex is away from the observer.

59. Draw the top and front views of a hexagonal pyramid whose base is a regular hexagon of side 30 mm and height 60 mm. A pyramid stands on the H.P. on the corner of its base, which is inclined at 45° to the H.P. The side of base is parallel to the V.P. as also the axis of a pyramid. Project its front view on an auxiliary plane perpendicular to the V.P. and the H.P.

60. A hexagonal pyramid of 40 mm side of base and 75 mm axis length is lying on one of its triangular surface in the V.P. so that its axis is inclined at an angle of 45° to the H.P. Draw its front view, top view and side view.

Scanned by CamScanner

61. A hexagonal pyramid of base 30 mm side and axis 60 mm long has one of its triangular face in the V.P. and an edge of the base contained by that face is inclined at an angle of 30° with the H.P. Draw its projections.

62. A hexagonal pyramid edge of base 25 mm axis 60 mm long has one of its triangular face in the V.P. and the shorter edge of that face is inclined at 60° to the H.P. Draw the projections if the apex is pointing downwards.

63. A hexagonal pyramid edge of base 30 mm, length of an axis 70 mm has one of its triangular faces on the H.P. and the axis is inclined at 45° to the V.P. Draw its projections.

Cone

64. A cone of 50 mm diameter of base and 55 mm length of an axis has one of its generator on the H.P. and inclined at 45° to the V.P. Draw the projections if the apex is away from the observer.

65. A cone of 60 mm diameter of base and 60 mm length of an axis has a generator on the H.P. and the axis is inclined at 30° to the V.P. Draw its projections.

66. A cone of base 60 mm diameter and 70 mm high rests on its circular rim in such a way that one of its generator is perpendicular to the H.P. Draw its projections. The plane containing the vertical generator and axis is parallel to the V.P.

67. A cone, diameter of base 45 mm, length of an axis 55 mm has one of its generator perpendicular to the H.P. and the plane containing that generator and the axis is inclined at 45° to the V.P. Draw the projections.

68. A cone of 50 mm diameter of base and 65 mm length of an axis has one of its generator on the H.P. and the axis is inclined at 45° to the V.P. Draw its projections.

69. A cone of 50 mm diameter and 55 mm length of an axis has one of its generators in the V.P. and inclined at 30° to the H.P. Draw projections of a cone when the apex points downwards.

70. The frustum of a cone 70 mm diameter of a circular base, 50 mm diameter of top and having an axis of 70 mm has a hole of 30 mm diameter drilled centrally through its flat faces. The frustum rests on the rim of its base in such a way that the base makes an angle of 45° to the H.P. and the top view of an axis is inclined at 30° to the V.P. Draw its front and top views.

71. A frustum of a cone, top diameter 25 mm, base diameter 55 mm and axis 60 mm has its base inclined at 60° to the H.P. and the axis is inclined at 45° to the V.P. Draw the projections.

72. A thin lamp shade is in the form of a frustum of cone, the ends are respectively 75 mm and 200 mm diameter, and the vertical height being 150 mm. It rests on the ground on a point of its larger end with its axis inclined at 40° to the horizontal plane and 30° to the vertical plane. The smaller end of a lamp shade is nearer to the vertical plane. Draw the projections.

73. A cone of 50 mm diameter of base and 60 mm length of an axis stands on a point of its rim so that the axis is inclined at 45° to the H.P. and 30° to the V.P. Draw its projections.

74. A cone of 55 mm diameter of base and 70 mm length of an axis has one of its generator on the H.P. and inclined at 45° to the V.P. Draw the elevation and the plan of a cone.

Cylinder

75. A cylinder of 40 mm diameter and 60 mm length of an axis has one of its generator in the V.P. Draw its projections.

76. A cylinder of 50 mm diameter of base and 70 mm length of an axis, has its axis inclined at 30° to the H.P. Draw its projections.

Scanned by CamScanner

11 SECTIONS OF SOLIDS

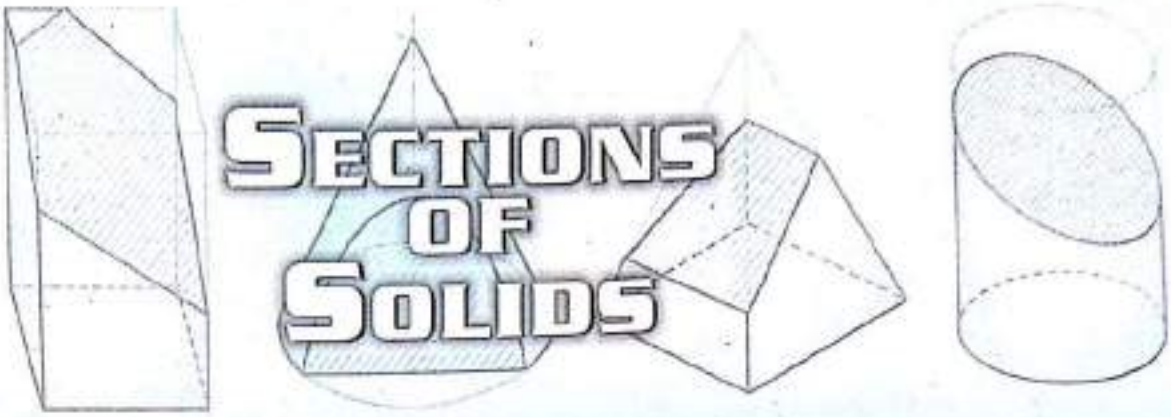

11.1 Introduction

An object is assumed to be sectioned or cut by a section plane or a cutting plane for exposing the internal details completely.

11.2 Projection of Sectional View

The cut portion of an object that lies between the section plane and the observer is assumed to be removed and retained portion's view is projected on the principal plane is called as *sectional view.*

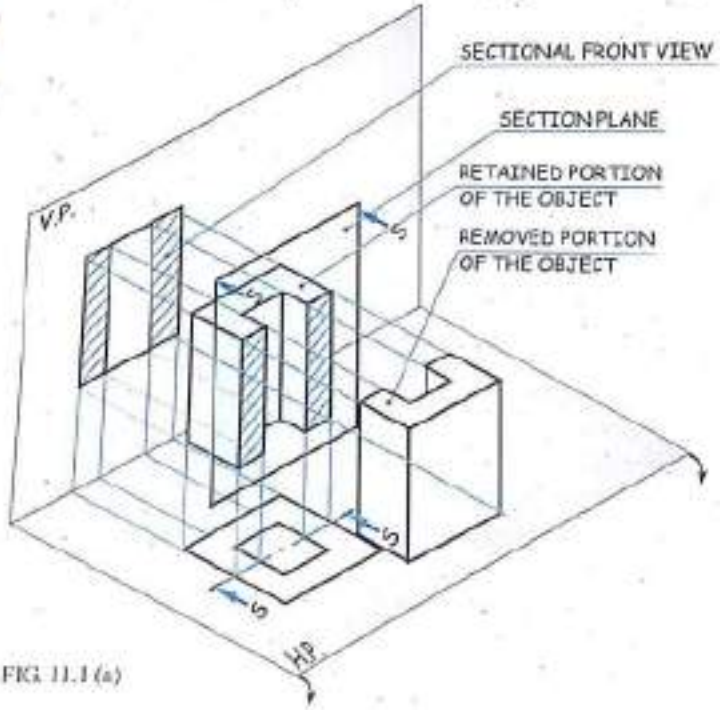

FIG. 11.1 (a)

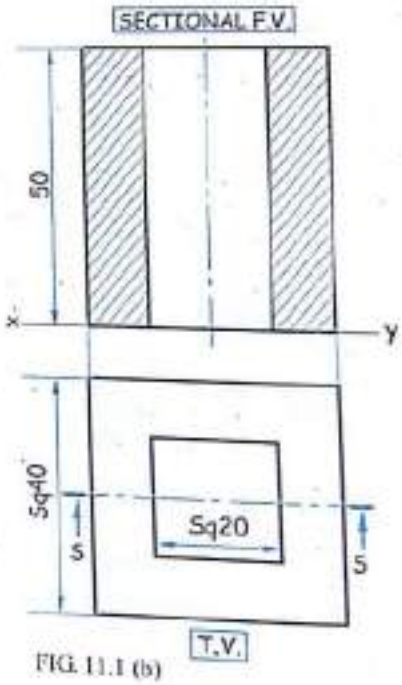

FIG. 11.1 (b)

Figure 11.1 (a) and *(b)* shows the projection of the sectional F.V. of an object. The object is cut by a sectional plane *S-S.* Assuming that half portion is removed from the sectional F.V. to the retained portion of an object and is projected on the V.P., while the T.V. is projected for the whole uncut object in the H.P. Henceforth the convention followed in this chapter is to draw the thick object lines for the retained part of a solid and the thin construction lines for the removed part of a solid.

Scanned by CamScanner

Conventional Representation of Section Plane

The imaginary plane which cuts the object is called as section plane or cutting plane.
Refer figure 11.2.
A thin chain line with thick at the ends and arrow head which indicates the direction of a viewer (observer) is used to represent the section plane.

FIG. 11.2

Section Lines (Hatching)

The affected area under the sectional view is drawn by the thin inclined lines is called as *section lines*. These lines are generally made inclined at 45° to the main object line or to the main axis of an object. They are evenly spaced parallel lines to themselves with an approximate gap, ranging from 1 to 2 mm chosen in the proportion to the area of sections.

11.3 Types of Section Plane

Generally section planes are perpendicular to the principal planes, hence they are represented by their traces, Horizontal Trace (H.T.) / Vertical Trace (V.T.)

11.3.1 Section Plane Perpendicular to V.P. and Parallel to H.P

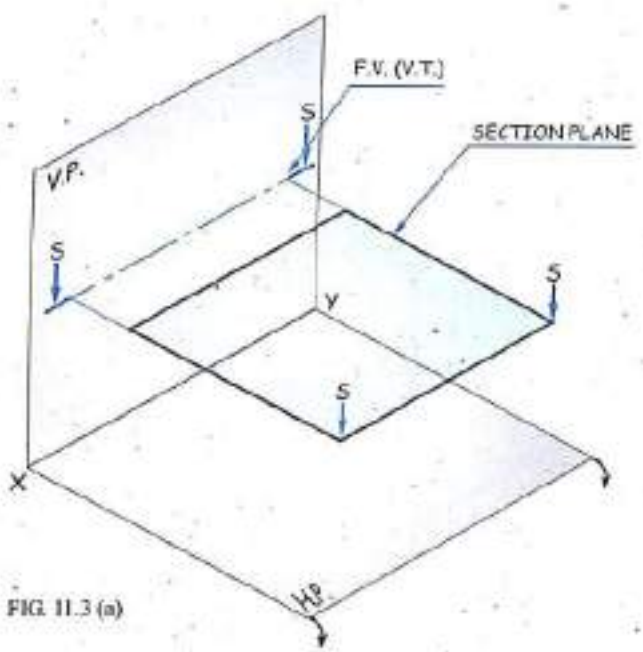

FIG. 11.3 (a)

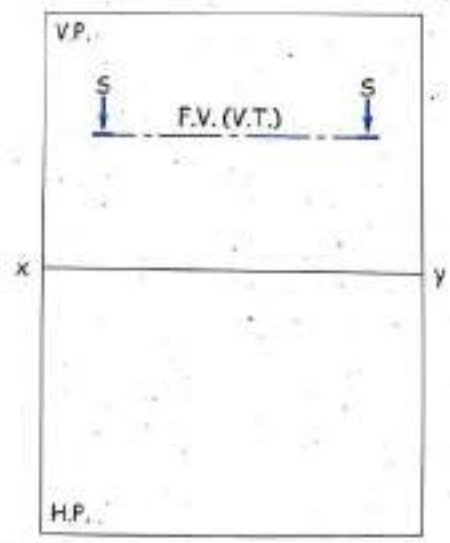

FIG. 11.3 (b)

The F.V. of a section plane is a line view, which will be the vertical trace (V.T.), parallel to the *XY* line. It is also called as *Horizontal Cutting Plane*. The sectional T.V. is obtained under this cutting plane. *Refer figure 11.3 (a) and (b).*

Scanned by CamScanner

11.3.2 Section Plane Perpendicular to H.P. and Parallel to V.P.

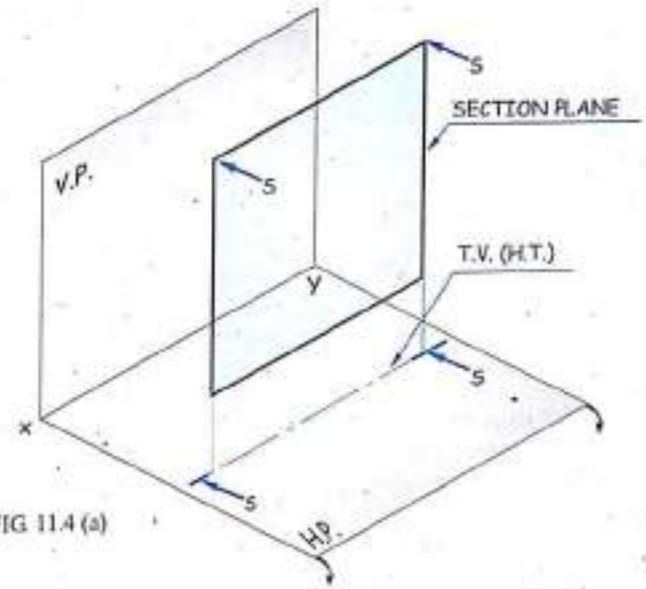

FIG. 11.4 (a)

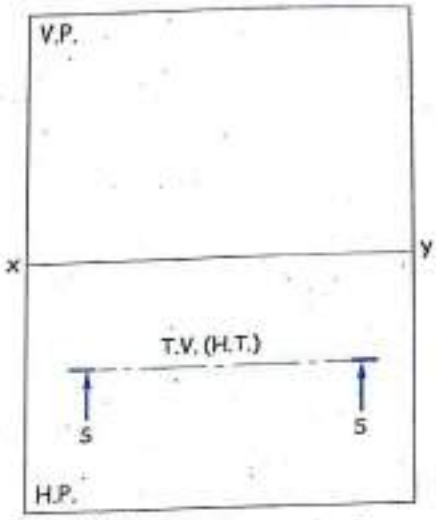

FIG. 11.4 (b)

The T.V. of a section plane is a line view, which will be the horizontal trace (H.T.) , parallel to the *XY* line. It is also called as *Vertical Cutting Plane*. The sectional F.V. is obtained under this cutting plane. *Refer figure 11.4 (a) and (b).*

11.3.3 Section Plane Perpendicular to V.P. and Inclined to H.P.

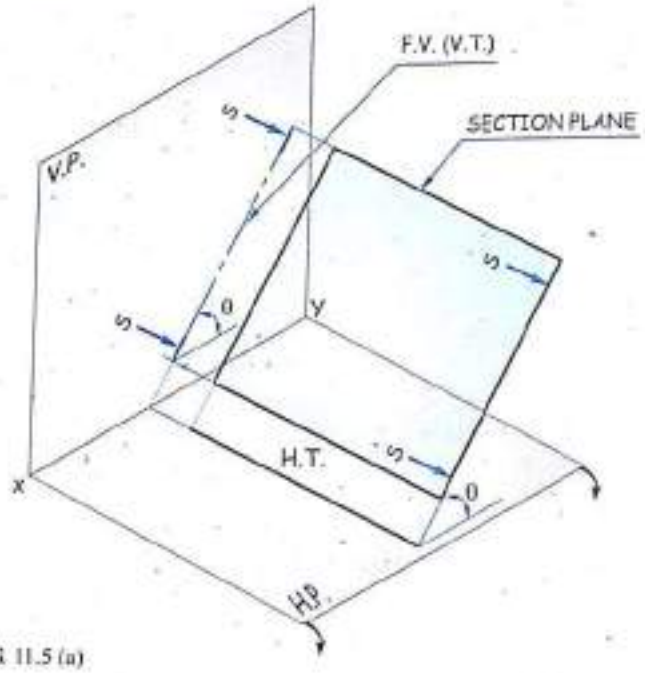

FIG. 11.5 (a)

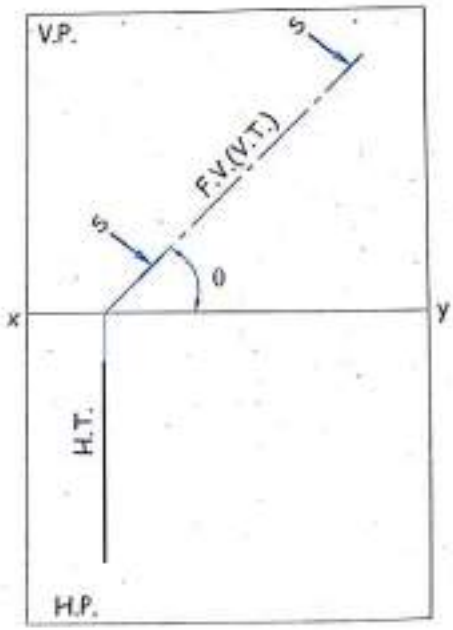

FIG. 11.5 (b)

The F.V. of a section plane is a line view, which will be the (V.T.) inclined at θ to the *XY* line. It is also called as *Auxilliary Inclined Plane* (A.I.P.). The sectional T.V. and the sectional side view are obtaind under this cutting plane. *Refer figure 11.5 (a) and (b).*

Scanned by CamScanner

11.3.4 Section Plane Perpendicular to H.P. and Inclined to V.P.

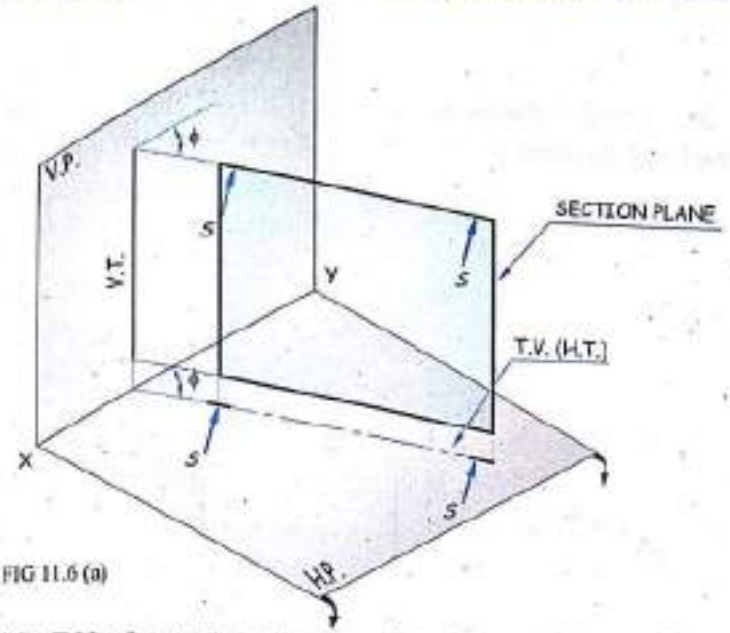

FIG 11.6 (a)

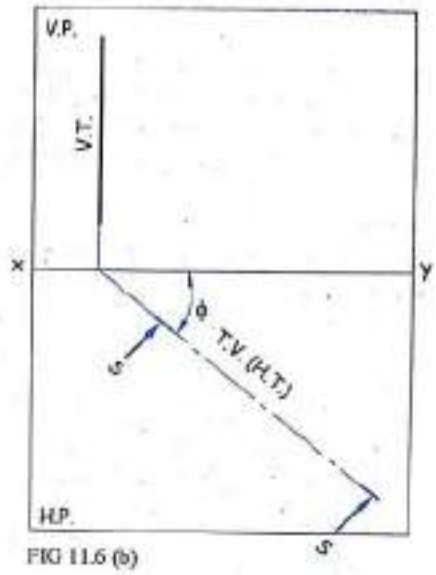

FIG 11.6 (b)

The T.V. of a section plane is a line view, which will be the H.T. inclined at ϕ to the *XY* line. It is also called as *Auxiliary Vertical Plane* (A.V.P.). The sectional F.V. and the sectional side view are obtained under this cutting plane. *Refer figure 11.6 (a) and (b).*

11.3.5 Section Plane Perpendicular to Both H.P. and V.P.

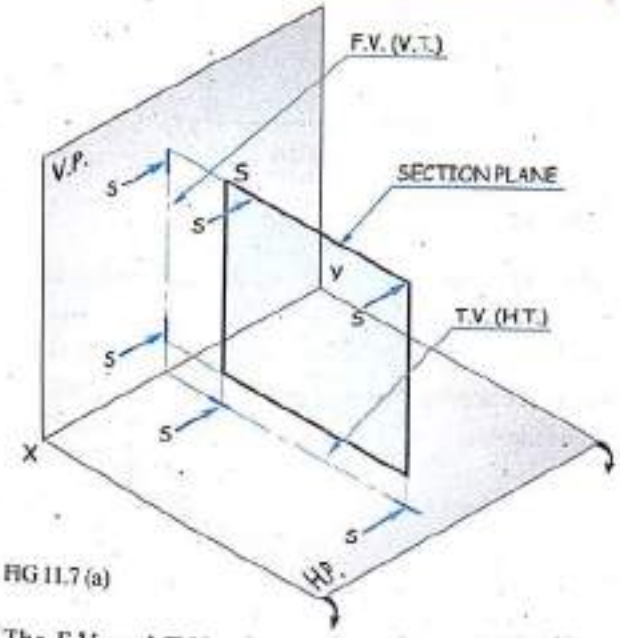

FIG 11.7 (a)

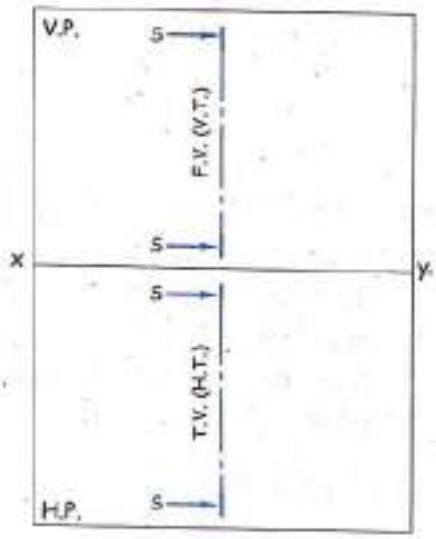

FIG 11.7 (b)

The F.V. and T.V. of a section plane are the line views which are also represented as V.T. and H.T. respectively perpendicular to the *XY* line. The sectional side view is obtained under this cutting plane. It is also called as *Auxiliary Vertical Plane* (A.V.P.). The sectional F.V. and the sectional side view is obtained under this cutting plane. *Refer figure 11.7 (a) and (b).*

Note : *Though H.T. and V.T. is excluded from new syllabus of M.U. it is given for better understanding of the topic.*

Scanned by CamScanner

11.4 Solved Problems I

Problem 1

A square prism side of base 30 mm, axis length 50 mm has its base in the H.P. such that the side of base is perpendicular to the V.P. A horizontal cutting plane cuts the prism 15 mm below the top base. Draw the F.V. and the sectional T.V.

Solution

Refer figure 11.8 (a) and (b).

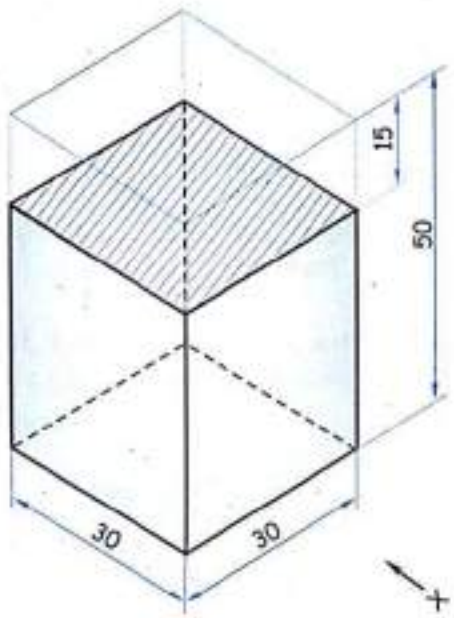

FIG. 11.8 (a)

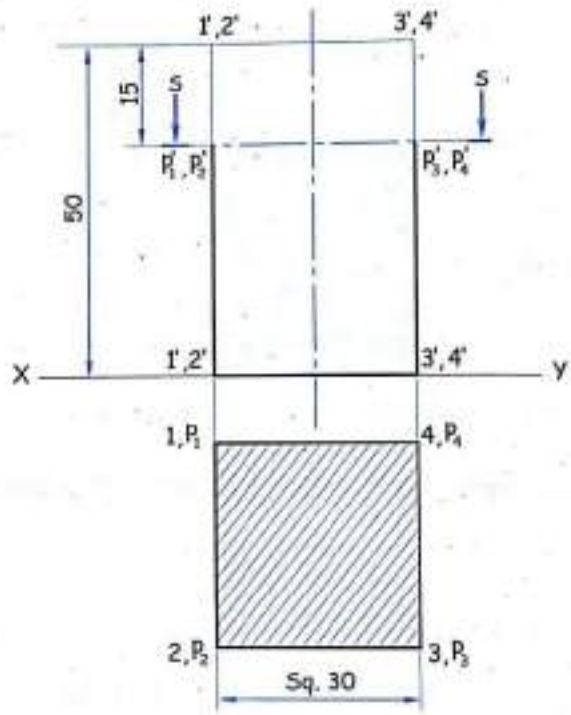

FIG. 11.8 (b)

1. Draw the T.V. of a prism as a square of side 30 mm with side of base *1-2* and *3-4* perpendicular to the *XY* line.
2. Project the F.V. with axis length 50 mm.
3. Draw the horizontal cutting plane *S-S*, 15 mm below the top base and parallel to *XY*.
4. Draw the section lines (hatching lines) in the T.V. as shown.

General Practice to Name the Points

(i) Name the corners of a prism as *1,2,3,4* in the T.V.

(ii) Name the vertical edges of the F.V. as *1'-1', 2-2', 3-3', 4'-4'* respectively.

(iii) Name the point of intersection (common point) of the cutting plane and vertical edges as p'_1, p'_2, p'_3, p'_4, respectively. (Vertical edge *1'-1'* will carry p'_1, *2'-2'* will carry p'_2, and so on.)

(iv) Project these points in the T.V. on respective vertical edges and mark p_1, p_2, p_3, p_4, respectively.

Scanned by CamScanner

Problem 2(a)

A square prism side of base 30 mm, axis height 50 mm has its base in the H.P. with two sides of base parallel to the V.P. It is cut by an auxiliary inclined plane (A.I.P.). which bisects the axis and makes an angle 45° to the H.P. Draw the projection of F.V., sectional T.V., sectional S.V. and the true shape of a section. *(Use first angle method.)*

Solution (a)

Refer figure 11.9 (a) and (b).

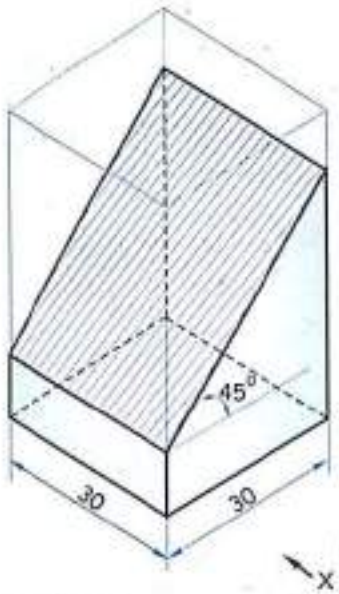

FIG.11.9 (a)

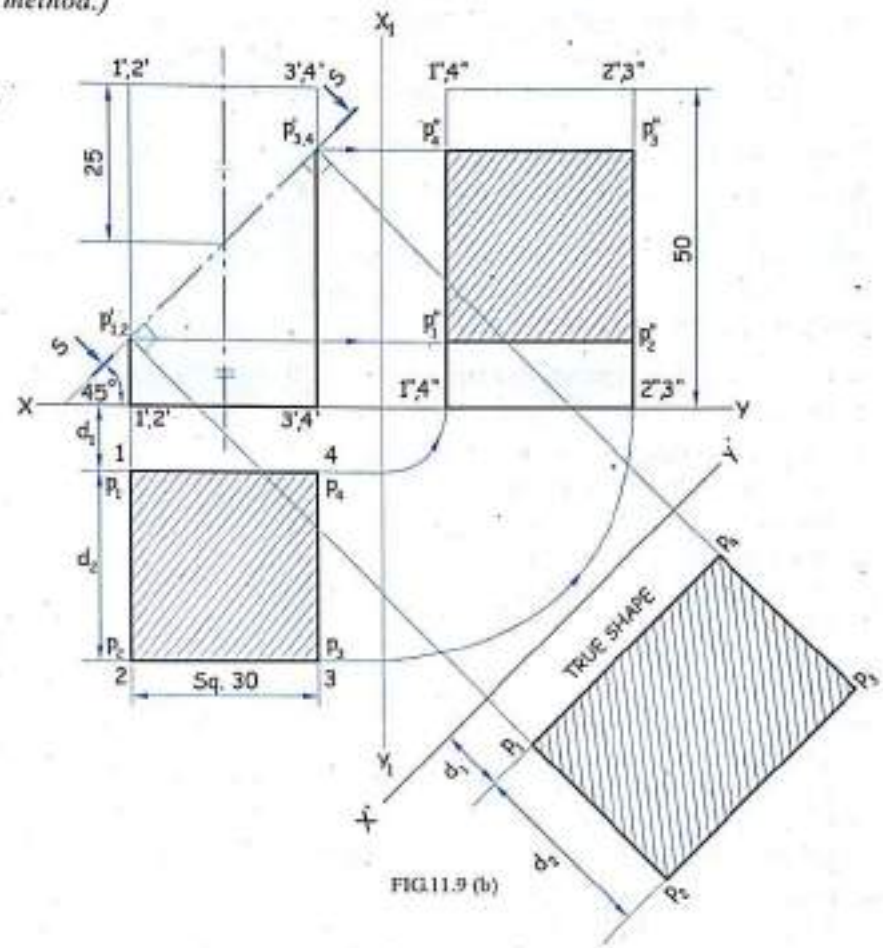

FIG.11.9 (b)

1. Draw the T.V. of a prism as a square of side 30 mm with side of base *1-4* and *2-3* parallel to *XY*.
2. Project the F.V. with the given axis height 50 mm.
3. Project the side view from the F.V. and the T.V. as shown.
4. Draw the auxiliary inclined plane (section plane) *S-S*. which bisects the axis of a prism at an angle 45° to the *XY* line.
5. Name the point of intersection of section plane *S-S* and vertical edges as P_1', P_2', P_3', P_4' respectively. $(P_1', P_2' \Rightarrow P_{1,2}'$; $P_3', P_4' \Rightarrow P_{3,4}')$
6. Project these points in the T.V. on the respective vertical edges and mark P_1, P_2, P_3, P_4 respectively.
7. Assume the lower portion of a prism to be retained and draw the section lines in the T.V.
8. Project P_1', P_2', P_3', P_4' from F.V. on the respective vertical edges and mark P_1'', P_2'', P_3'', P_4'' in the side view as shown.
9. Join P_1'', P_2'', P_3'', P_4'' and draw the section lines in the S.V. to obtain sectional side view.

Scanned by CamScanner

10. Construction of True Shape of Section.

(i) Draw the projectors through P_1', P_2', P_3', P_4' perpendicular to the section plane *S-S* from the F.V. as shown in *figure 11.9 (b)*.

(ii) Draw $X'Y'$ perpendicular to the drawn projectors.

(iii) Transfer distance of points P_1, P_2, P_3, P_4 of the T.V. from the XY line to the new reference line $X'Y'$ on respective projectors and mark P_1, P_2, P_3, P_4 respectively as shown.

(iv) Join P_1, P_2, P_3, P_4, which is the true shape of section.

Problem 2(b)

A square prism side of base 30 mm, axis height 50 mm has its base in the ground with two sides of base parallel to the V.P. It is cut by an auxiliary inclined plane (A.I.P.), which bisects the axis and makes an angle 45° to the ground. Draw the projection of F.V., sectional T.V., sectional S.V. and the true shape of a section. *(Use third angle method.)*

Solution (b). *Refer figure 11.9 (c).*

1. Draw the T.V. of a prism as a square of side 30 mm with side of base *1-4* and *2-3* parallel to *XY*.
2. Project the F.V. with the given axis height 50 mm.
3. Project the side view from the F.V. and the T.V. as shown.
4. Draw the auxiliary inclined plane (section plane) *S-S*, which bisects the axis of a prism at an angle 45° to the *GL* line.
5. Name the point of intersection of section plane *S-S* and vertical edges as P_1', P_2', P_3', P_4' respectively. $(P_1', P_2' \Rightarrow P_{1,2}'$; $P_3', P_4' \Rightarrow P_{3,4})$
6. Project these points in the T.V. on the respective vertical edges and mark P_1, P_2, P_3, P_4 respectively.
7. Assume the lower portion of a prism to be retained and draw the section lines in the T.V.
8. Project P_1', P_2', P_3', P_4' from F. V. on the respective vertical edges and mark P_1'', P_2'', P_3'', P_4'' in the side view as shown.
9. Join P_1'', P_2'', P_3'', P_4'' and draw the section lines in the S.V. to obtain sectional side view.

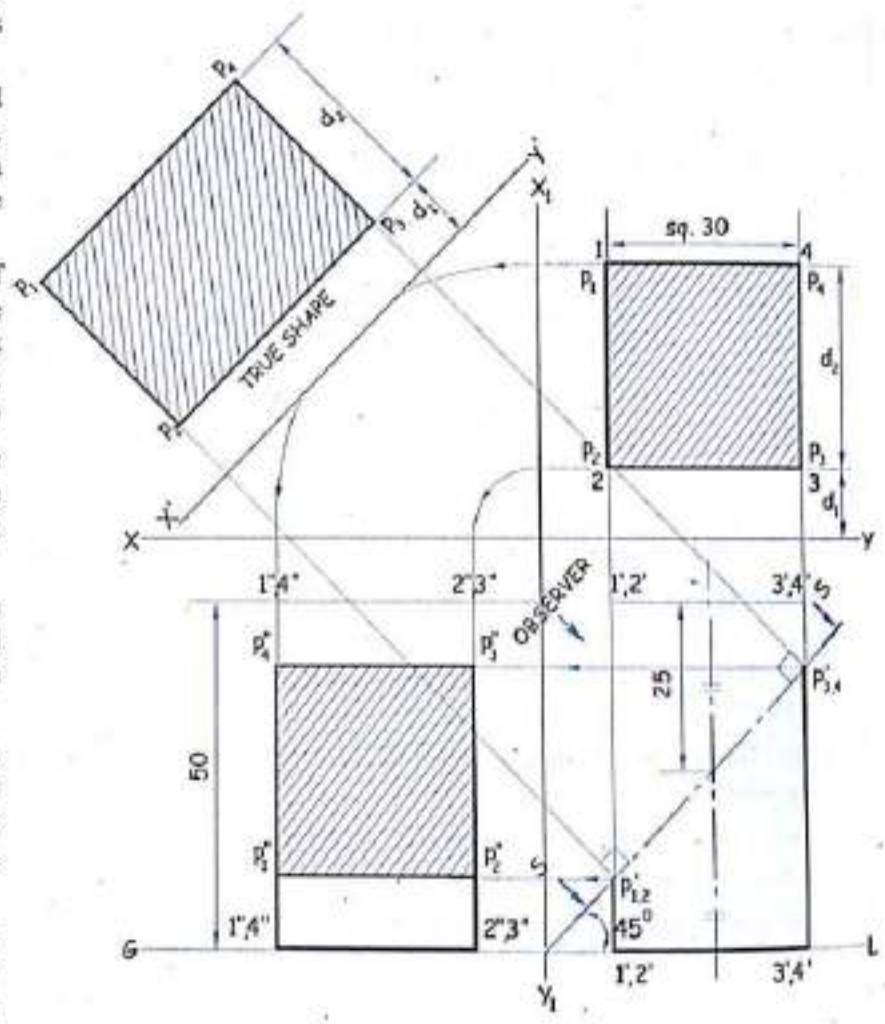

FIG 11.9 (c)

Scanned by CamScanner

10. Construction of True Shape of Section.

(i) Draw the projectors through P_1, P_2, P_3, P_4 perpendicular to the section plane *S-S* from the F.V. as shown in *figure 11.9 (c)*.

(ii) Draw $X'Y'$ perpendicular to the drawn projectors.

(iii) Transfer distance of points P_1, P_2, P_3, P_4 of the T.V. from the XY line to the new reference line $X'Y'$ on respective projectors and mark P_1, P_2, P_3, P_4 respectively as shown.

(iv) Join P_1, P_2, P_3, P_4 , which is the true shape of section.

Problem 2(c)

A square prism side of base 30 mm, axis height 50 mm has its base in the H.P. with two sides of base parallel to the V.P. It is cut by an auxiliary inclined plane (A.I.P.), which bisects the axis and makes an angle 45° to the H.P. Draw the projection of F.V., sectional T.V., sectional S.V. and the true shape of a section. (Draw the true shape of section by placing the section plane *S-S* parallel to reference line)

Solution (c) Follow steps 1 to 9 from solution 2(a).
Refer figure 11.9 (d).

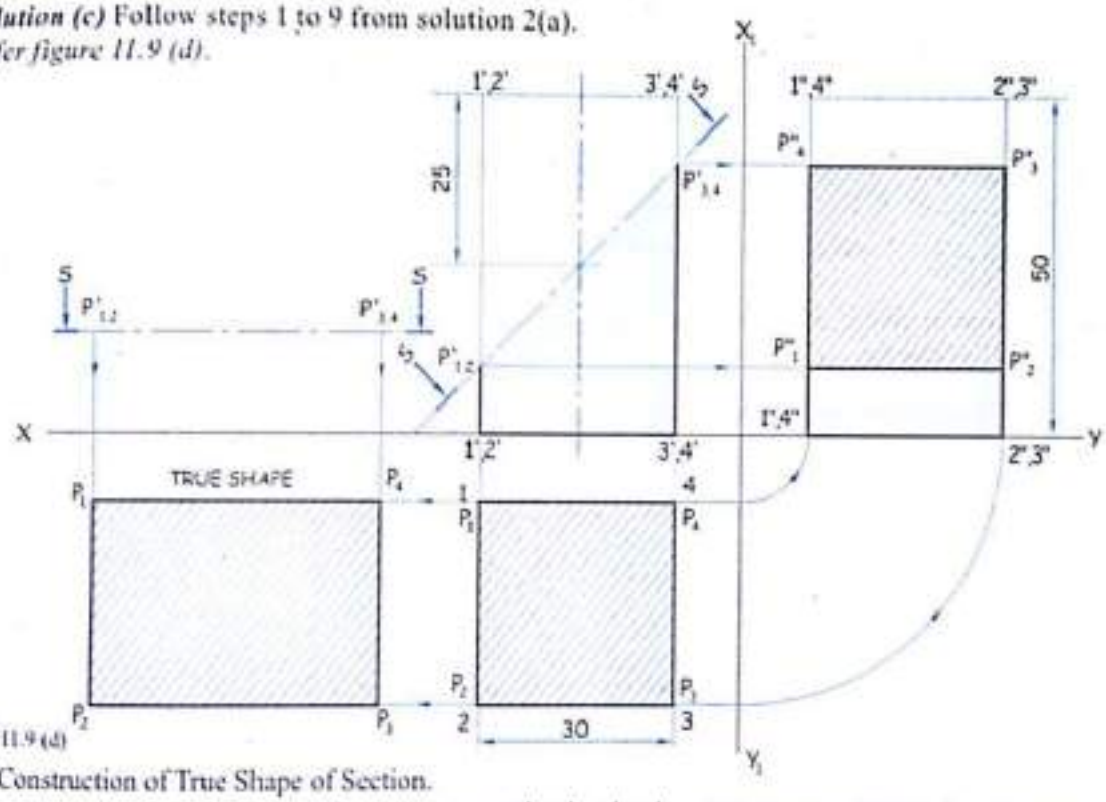

FIG. 11.9 (d)

10. Construction of True Shape of Section.

(i) Place the section plane *S-S* with points P_1', P_2', P_3', P_4' parallel to the XY line as shown in *figure 11.9 (d)*.

(ii) Draw the projectors through the points P_1', P_2', P_3', P_4' vertically down.

(iii) Draw the horizontal projectors through P_1, P_2, P_3, P_4 from the T.V.

(iv) Mark P_1, which is the intersection of a vertical projector through P_1' (F.V.) and a horizontal projector through P_1 (T.V.)

(v) Similarly, mark, P_2, P_3, P_4 as shown.

(vi) Join P_1, P_2, P_3, P_4 which is the true shape of the section.

Scanned by CamScanner

Problem 3

A square prism side of base 30 mm, axis height 50 mm stands vertical on the H P. with the sides of a base perpendicular to the V.P. A section plane perpendicular to the V.P. and inclined at 60° to the H.P. cuts the prism, which passes through the point on the axis at a distance of 15 mm from the top base. Draw the projection of F.V., sectional T.V., sectional S.V. and the true shape of a section.

Solution

Refer figure 11.10 (a) and (b).

1. Draw the T.V. as a square with side 30 mm and then project the F.V. and the S.V. with the axis height 50 mm.
2. Draw the section plane *S-S* passing through the point on the axis 15 mm below the top base and inclined at θ = 60° to *XY*.
3. Mark p'_1, p'_2 on the vertical edges *1'-1'*, *2'-2'* respectively and mark *a'*, *b'* on the top base.
4. Project the points p'_1, p'_2, *a'*, *b'* vertically down from the F.V. and mark p_1, p_2, *a*, *b* in the T.V. as shown.
5. Join p_1, p_2, *a*, *b* and draw a section line in the T.V. (i.e. sectional T.V.)
6. Project the points p'_1, p'_2, *a'*, *b'* horizontally from the F.V. and mark p''_1, p''_2, *a''*, *b''* in the S.V. as shown.
7. Join p''_1, p''_2, *a''*, *b''* and draw a section line in the S.V. (i.e. sectional S.V.).
8. Place the section plane *S-S* with the points p'_1, p'_2, *a'*, *b'* parallel to *XY* as shown.
9. Draw the projector through p'_1, p'_2, *a'*, *b'* vertically down and the horizontal projector through p_1, p_2, *a*, *b* from the T.V. and mark p_1, p_2, *a*, *b* as their intersection
10. Join p_1, p_2, *a*, *b* which is the true shape of the section.

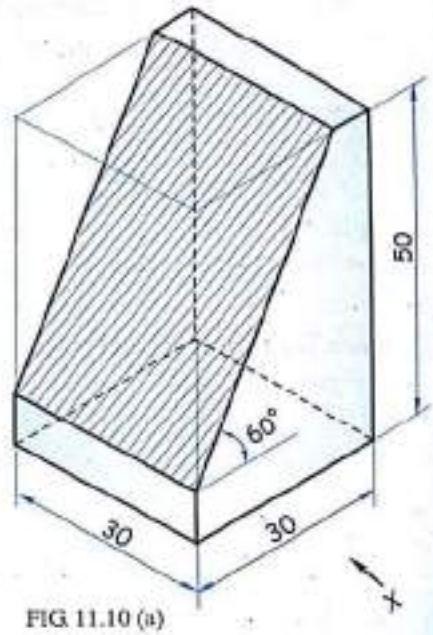

FIG 11.10 (a)

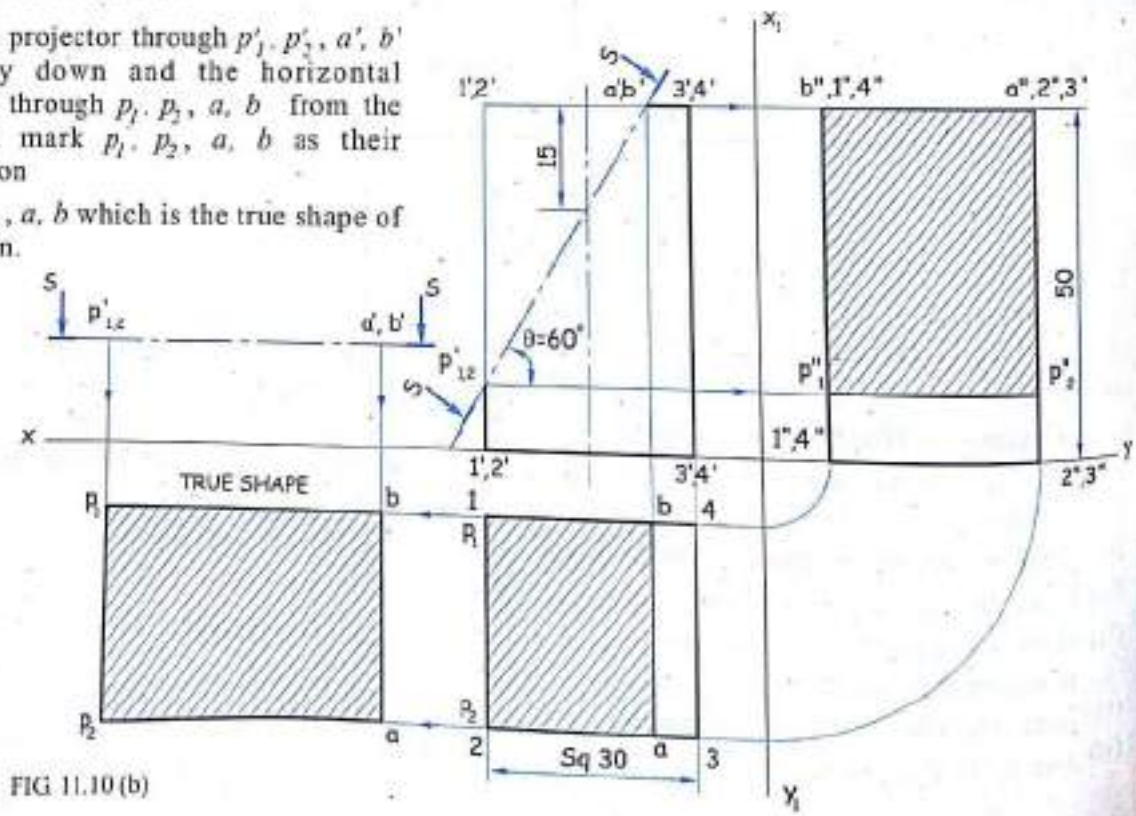

FIG 11.10 (b)

Scanned by CamScanner

Problem 4

A square prism side of base 30 mm, axis height 50 mm has its base in the H.P. such that the two of its rectangular faces are parallel to the V.P. It is cut by a section plane, which is perpendicular to the H.P and parallel to the V.P. and is 5 mm in front of the axis of a prism. Draw its projections.

Solution

Refer figure 11.11 (a) and (b).

1. Draw the T.V of a prism as a square of side 30 mm with side *1-4* parallel to *XY* and then project its F.V. and the S.V. with axis height 50 mm.
2. Draw the section plane *S-S* 20 mm away from the side *1-4* (i.e. 5 mm in front of the axis) and parallel to *XY*.
3. Complete F.V. is under section and which represents the true shape of a section.

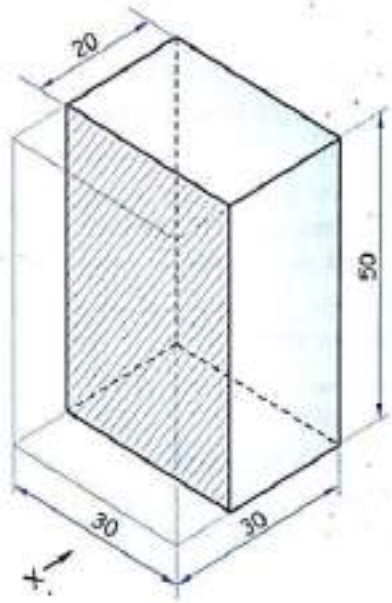

FIG. 11.11 (a)

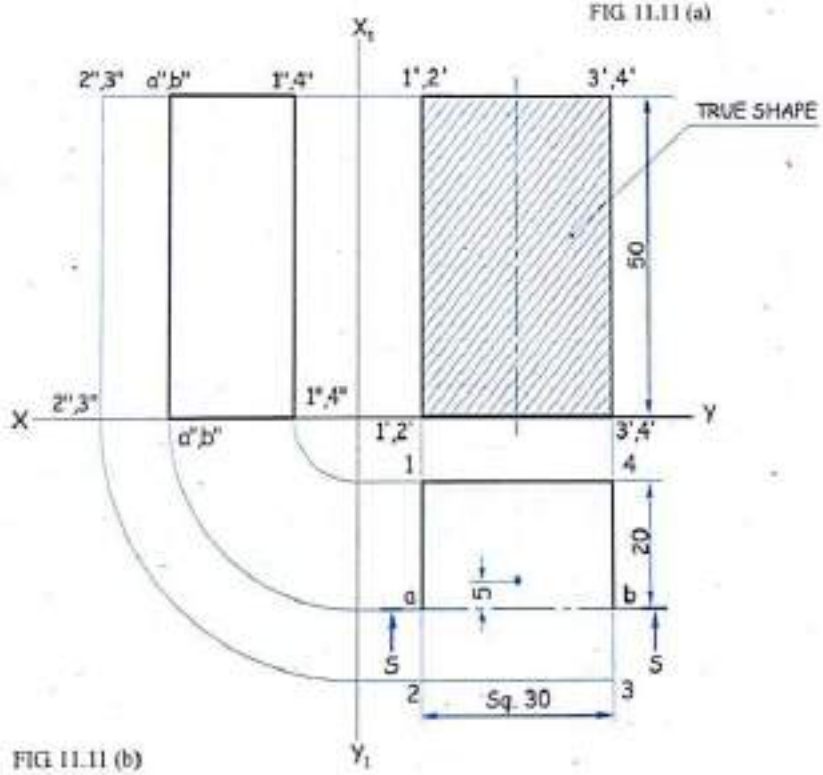

FIG. 11.11 (b)

Scanned by CamScanner

Problem 5

A square prism edge of base 30 mm, axis height 50 mm has its two edges of base perpendicular to the V.P. and stands vertically on the base in the H.P. An auxiliary vertical plane (A.V.P.) cuts the prism at an angle 30° to the V.P. and passes through the axis. Draw the projection showing the sectional F.V., T.V., sectional S.V. and the true shape of a section.

Solution

Refer figure 11.12 (a) and (b).

1. Draw the T.V as a square of side 30 mm with side, *1-4* parallel to *XY* and then project its F.V. and the S.V. with axis length 50 mm.
2. Draw the section plane *S-S* passing through the axis at an angle 30°) to *XY* in the T.V.
3. Draw the sectional F.V. and the sectional S.V. as shown.
4. Place the section plane *S-S* with points *a*, *b* parallel to the *XY* line and project the true shape of a section in the F.V.

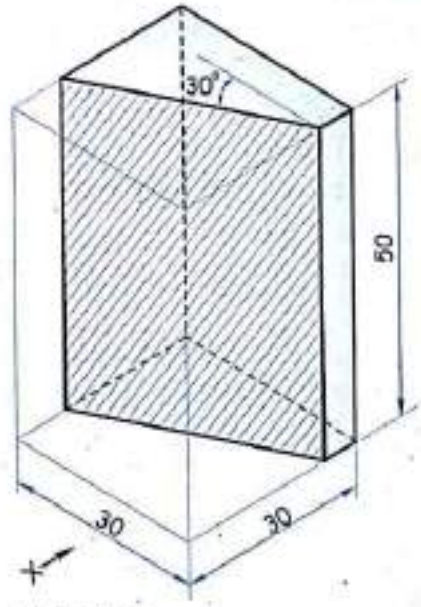

FIG. 11.12 (a)

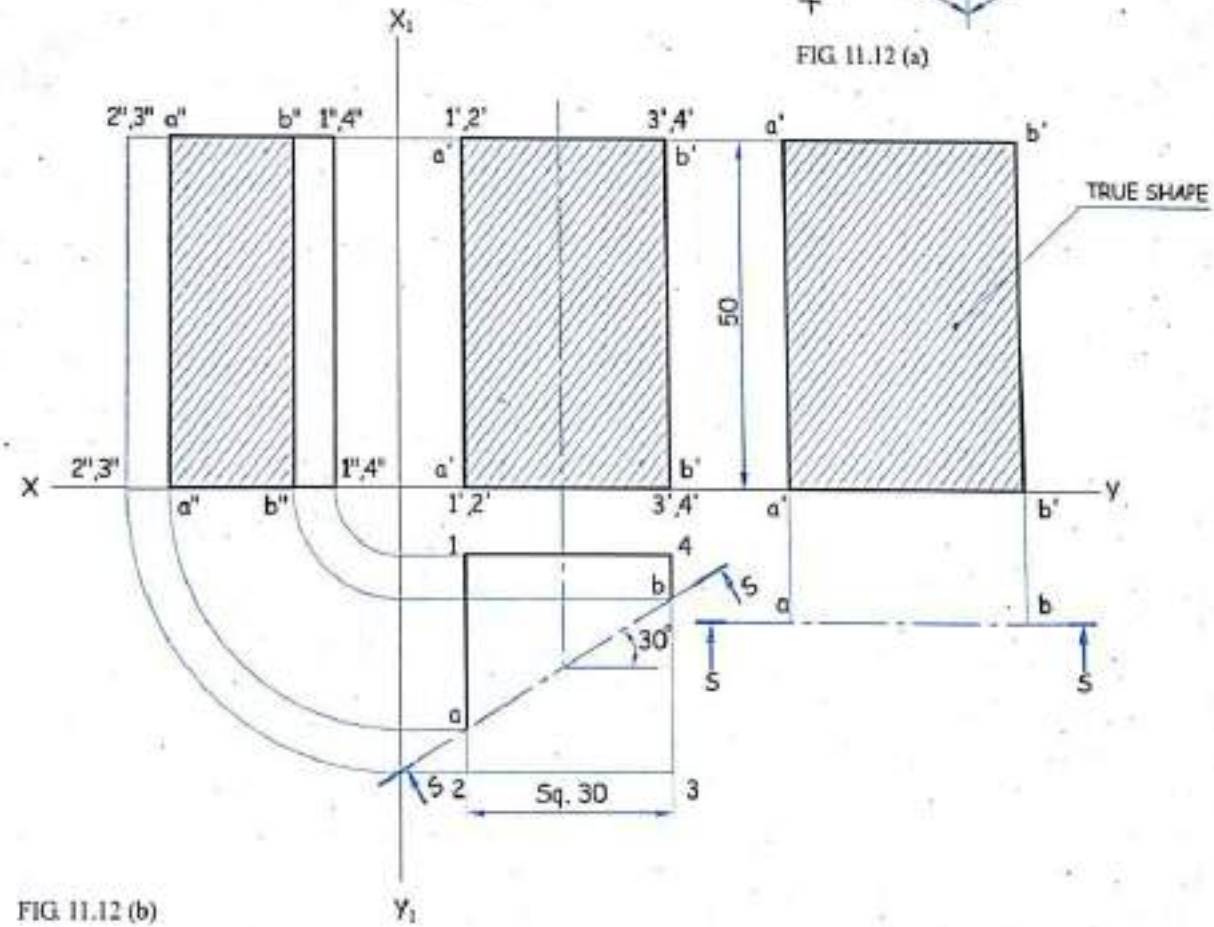

FIG. 11.12 (b)

Scanned by CamScanner

Problem 6

A square prism side of base 30 mm, axis height 50 mm has its base in the H.P., with two of its sides of base parallel to the V.P. It is cut by a section plane, which is perpendicular to the H.P. and the V.P. The section plane cuts the prism into two equal halves. Draw the projection of a prism.

Solution

Refer figure 11.13 (a) and (b).

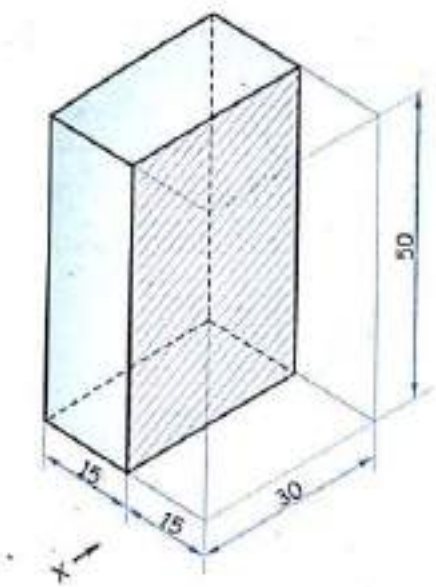

FIG. 11.13 (a)

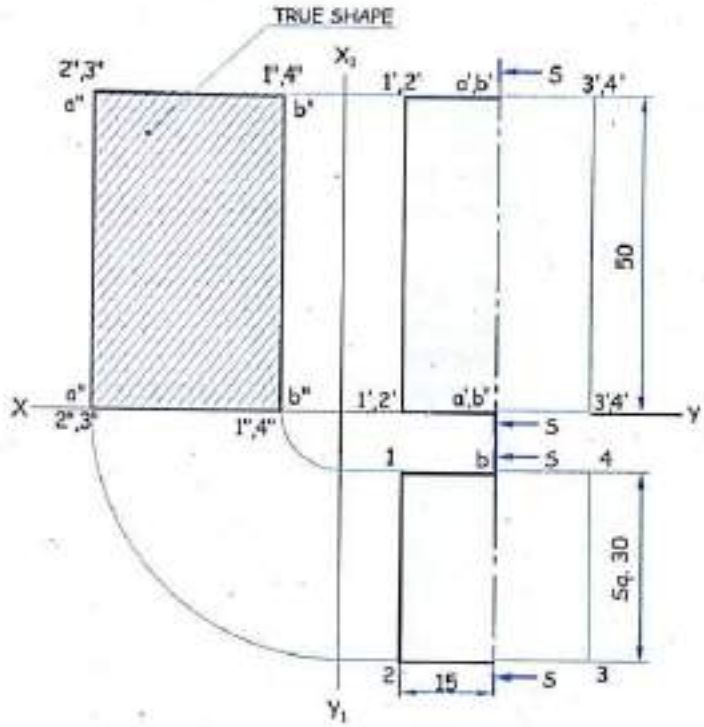

FIG. 11.13 (b)

1. Draw the T.V. as a square of side 30 mm and then project the F.V. and the S.V. with axis height 50 mm.
2. Since the sectional plane *S-S* is perpendicular to the H.P. and the V.P., a line view is seen in the F.V. and the T.V. as shown.
3. Complete side view is in the section and it represents the true shape of a section.

Scanned by CamScanner

Problem 7

Square prism side of base 30 mm, axis height 50 mm has its base in the H.P. such that its sides of base are equally inclined with the V.P. A section plane perpendicular to the V.P. and inclined to the H.P. at 45° cuts the prism such that it passes through the point on the axis at a distance of 12 mm below the top base. Assuming the major part to be retained, draw the projection of a prism showing the F.V., sectional T.V., sectional S.V. and the true shape of a section.

Solution

Refer figure 11.14 (a) and (b).

1. Draw the T.V. as a square with sides 30 mm such that the sides are equally inclined with *XY* (i.e. inclined at 45°)
2. Project the F.V. and the S.V. with the given axis length 50 mm.
3. Draw the section plane *S-S* at 45° to *XY* and passing through the point on the axis 12 mm below the top base.
4. Mark p'_2, p'_4, p'_3, a', b' as shown.
5. Project these points vertically down and mark p_2, p_4, p_3, a, b respectively in the T.V.
6. Join p_2, p_4, p_3, a, b and draw a section line, which gives the sectional T.V.
7. Project the points p'_2, p'_4, p'_3 from the F.V. and mark p''_2, p''_4, p''_3 on the respective vertical edges. Project the points *a and b* from the T.V. and mark a'' and b'' respectively on the top base.
8. Join $a'', b'', p''_2, p''_4, p''_3$ and draw the section lines, which gives the sectional S.V.
9. Place the section plane *S-S* (p'_2, p'_4, p'_3, a', b') parallel to the *XY* line.
10. Project the true shape of a section as shown

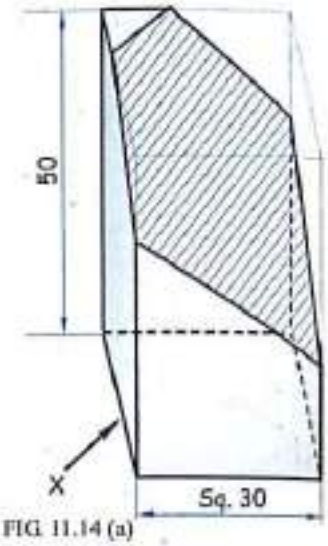

FIG. 11.14 (a)

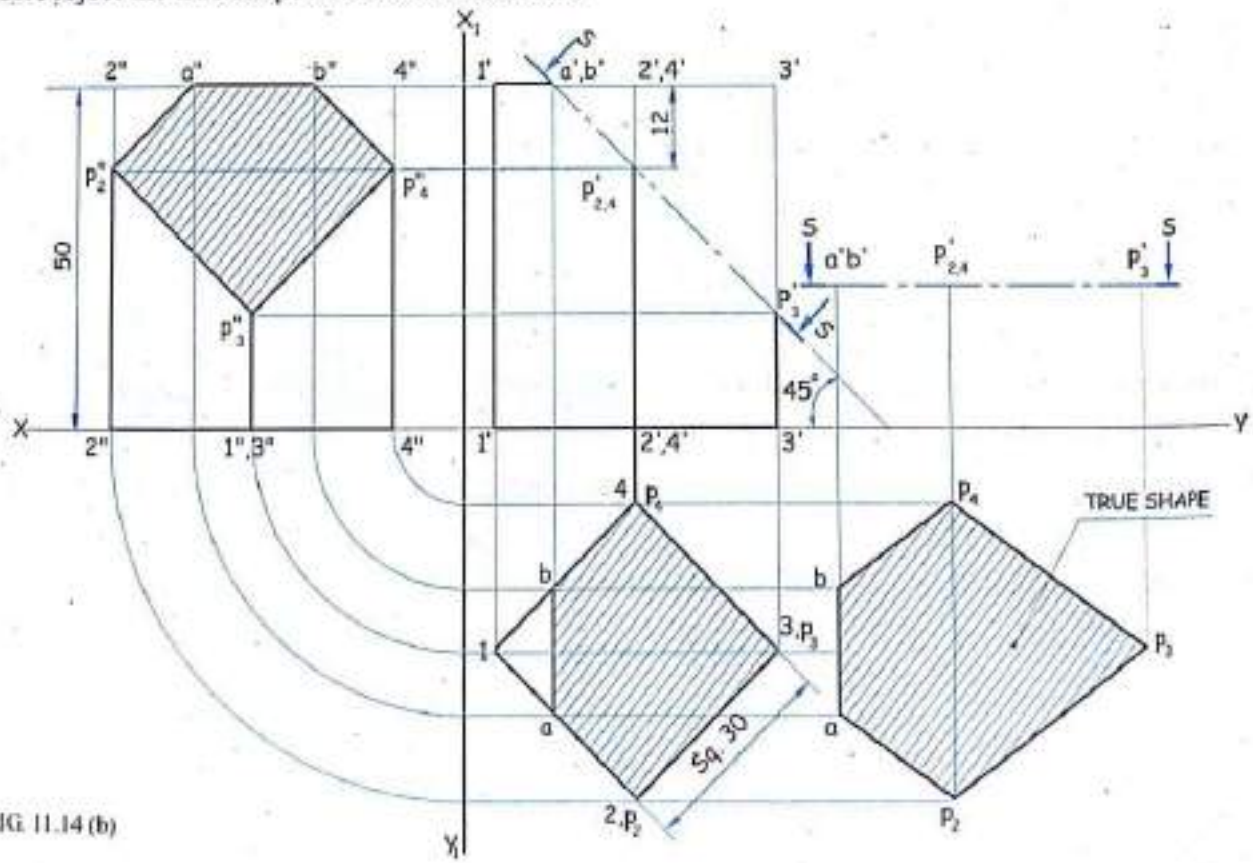

FIG. 11.14 (b)

Scanned by CamScanner

Problem 8

A cube of 40 mm long edges has its vertical bases equally inclined to the V.P. It is cut by the section plane perpendicular to the V.P. so that the true shape of a section is the regular hexagon. Determine the inclination of the cutting plane with the H.P. and draw the sectional T.V. and the true shape of a section.

(May '84, M.U.)

Solution

Refer figure 11.15.

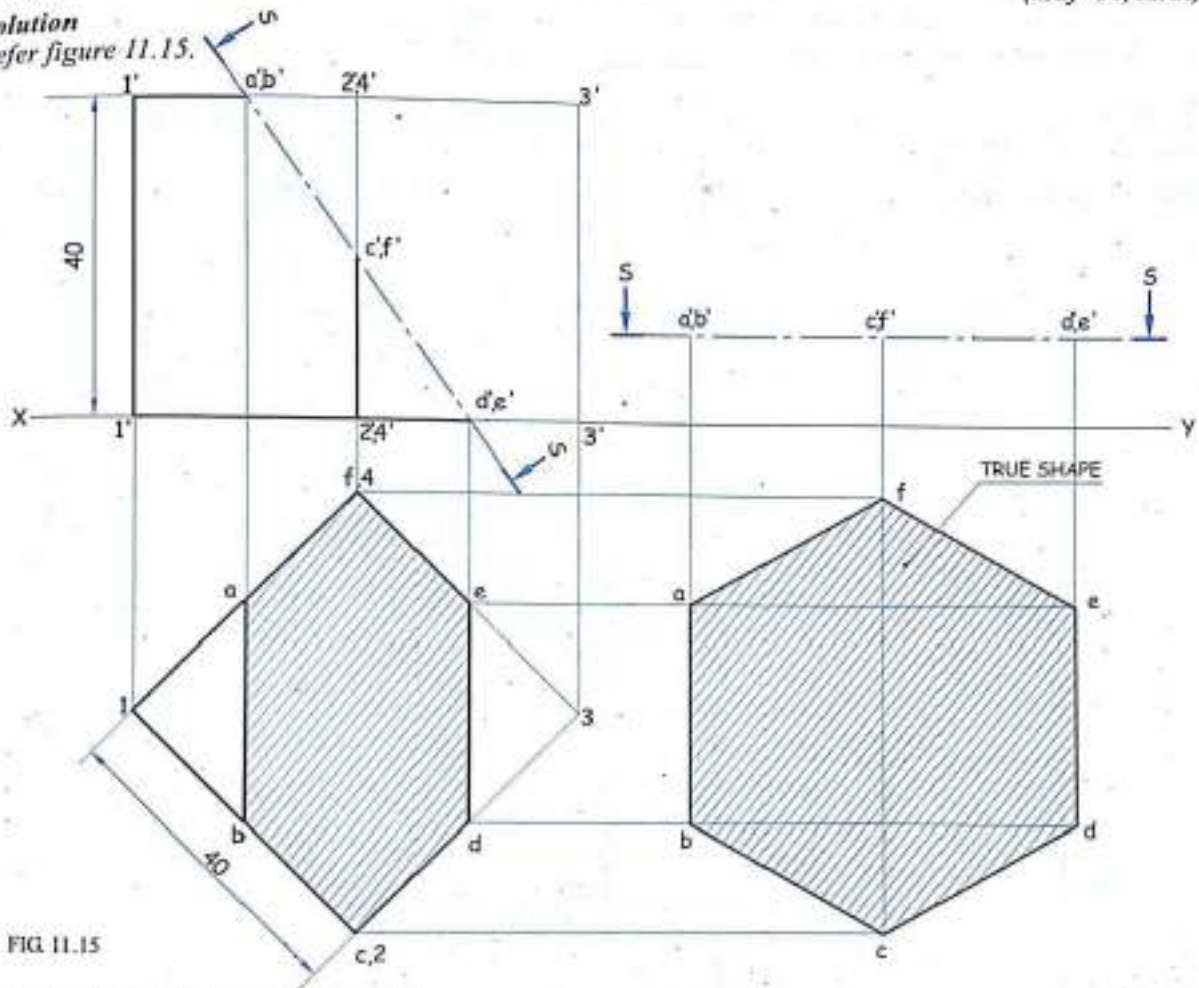

FIG. 11.15

1. Draw the T.V. and project the F.V.
2. Mark *a, b, d, e* as the mid-points of the sides of a square in the T.V. as shown.
3. Join *a* to *b* and *d* to *e* and draw the sectional T.V.
4. Draw the projector vertically up through *a, b* and mark *a', b'* in the F.V. on the top base, also draw the projector vertically up through *d, e* and mark *d', e'* in the F.V. on the bottom base.
5. Draw the section plane *S-S* through *a', b'* and *d', e'*.
6. Mark *c', f'* on the vertical edge *2'-2'; 4'-4'*.
7. Place the section plane *S-S* parallel to the *XY* line.
8. Project the true shape of a section by usual method.
9. Since the section plane cuts *6* edges of a cube in the F.V. and in the TV., it satisfies the relation of a regular hexagon in which side *ab* = *de* is half of the diagonal *cf* we get the true shape of a section as a regular hexagon.

Scanned by CamScanner

Problem 9

A cube of 40 mm long edges is resting on the H.P. on one of its face. Its vertical faces are equally inclined to the V.P. It is cut by an A.I.P. in such a way that the true shape of a section is

(i) A trapezium with two parallel sides of 20 mm and 40 mm.
(ii) A triangle with base 50 mm and altitude 40 mm.
(iii) An equilateral triangle of maximum size.
(iv) A rhombus of maximum size.

Solution

Refer figure 11.16 (a), (b), (c) and (d).

It is self explanatory.

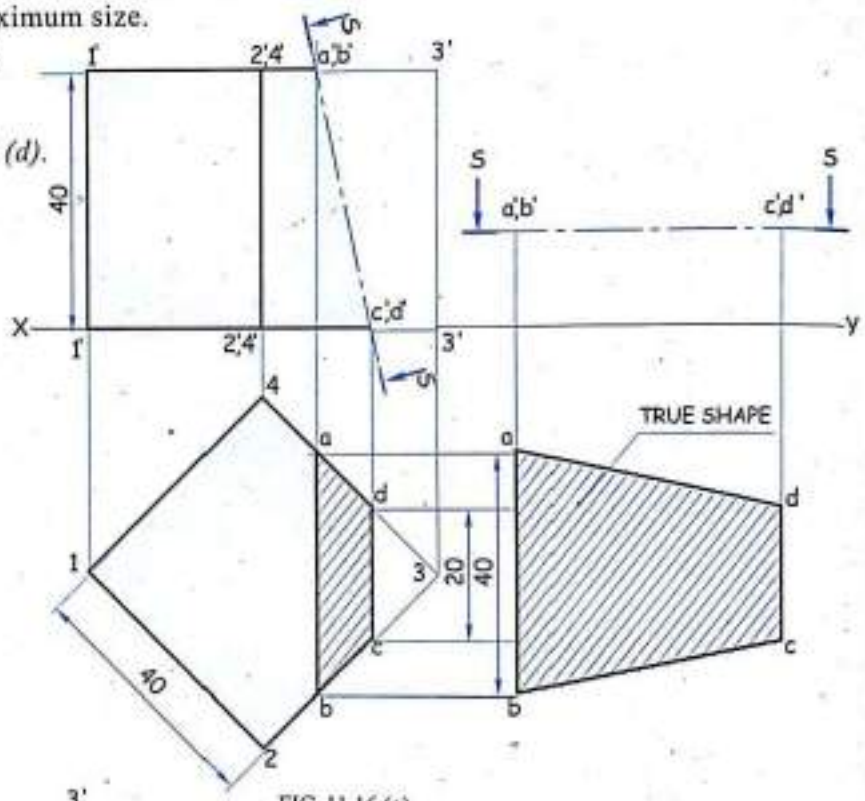

FIG. 11.16 (a)

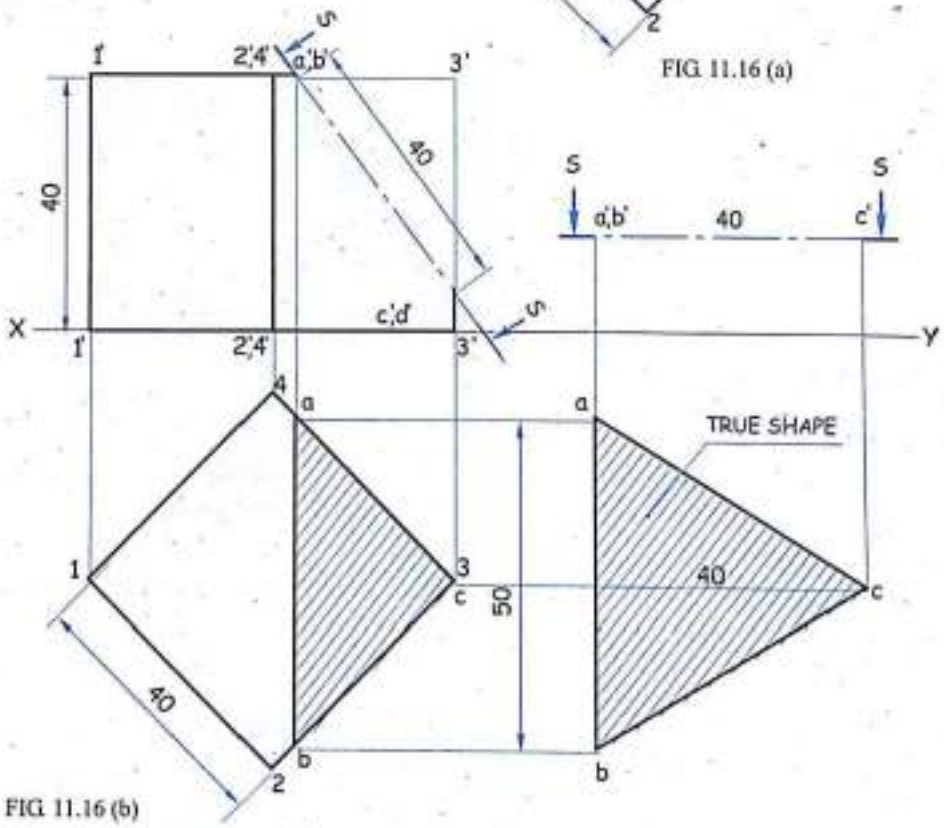

FIG. 11.16 (b)

Scanned by CamScanner

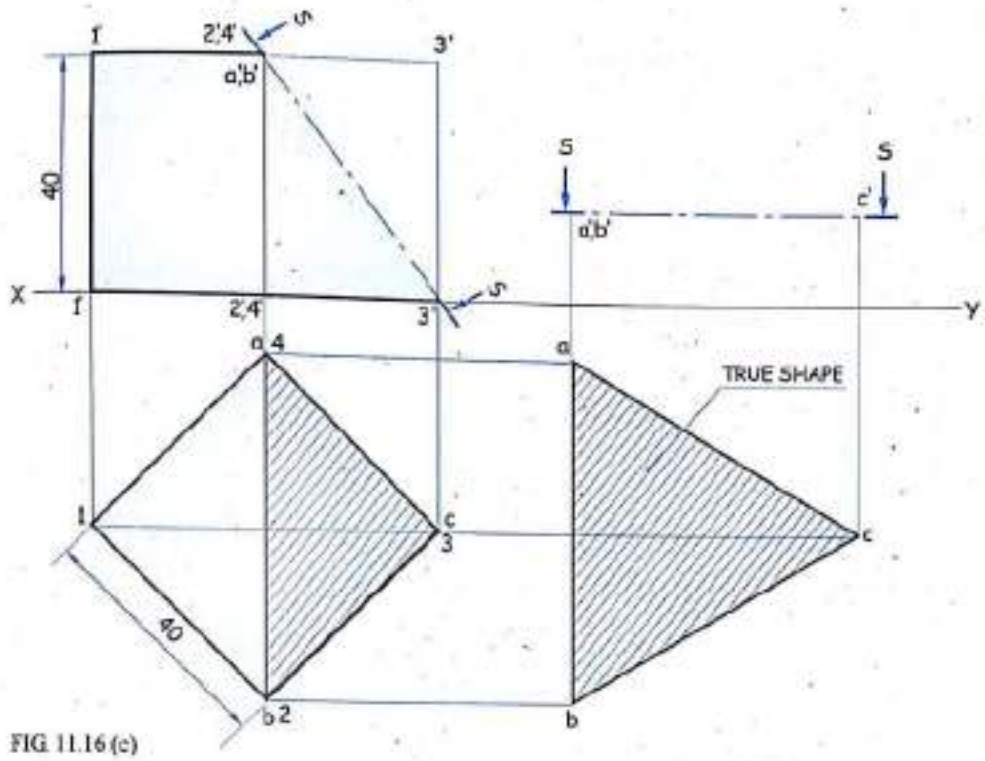

FIG. 11.16 (c)

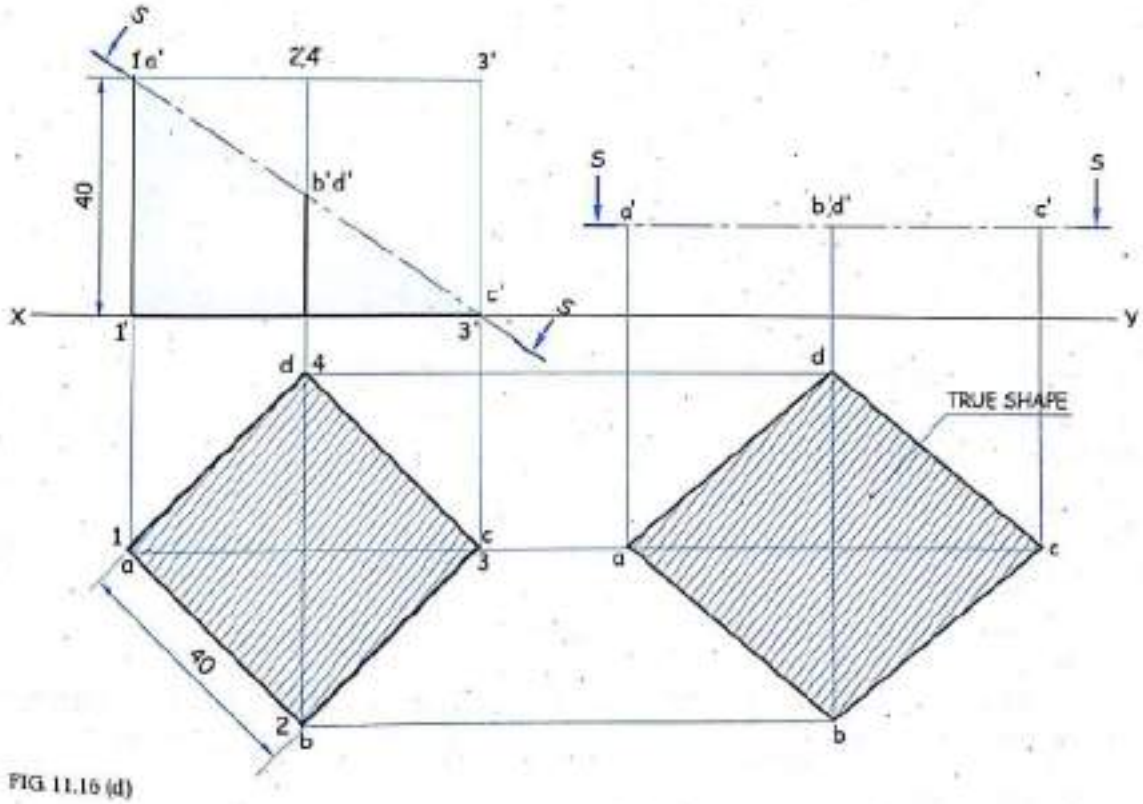

FIG. 11.16 (d)

Scanned by CamScanner

Problem 10

A cube of side 40 mm is lying on the H.P. on its square base. It is cut by a section plane such that the true shape of a section is the trapezium of parallel sides equal to the length of diagonal of a square face for one side and half of that length for the other side. Draw the F.V., sectional T.V. and the true shape of a section. Measure the angle made by the cutting plane with the H.P. *(Dec. '95, M.U.)*

Solution

Refer figure 11.17.

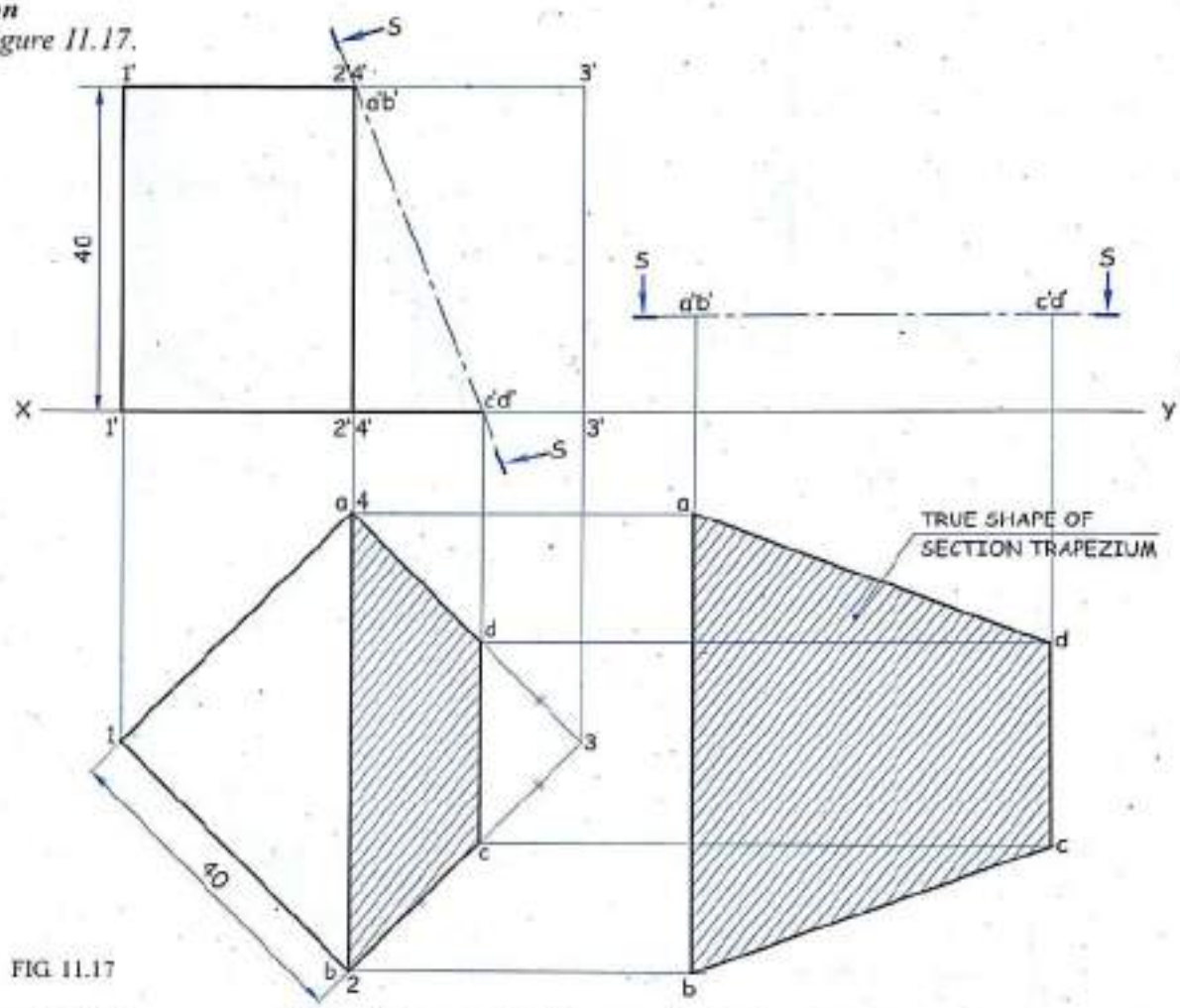

FIG. 11.17

1. Draw the T.V. as a square of side 40 mm with sides equally inclined to *XY* and project the F.V.
2. Mark *a* and *b* on the diagonal of square in the T.V. and mark *c* and *d* as a mid-point of sides *2-3* and *3-4* (*cd* will be half of *ab*).
3. Join *a, b, c, d* and draw the sectional T.V.
4. Project *ab* and *cd* vertically up and mark *a'b'* on the top base and *c'd'* on the bottom base in the
5. Draw the section plane *S-S* through *a'b'* and *c'd'* in the F.V.
6. Redraw the section plane *S-S* parallel to *XY* and project the true shape of a section by usual method.
7. We get the required true shape of a section, i.e. a trapezium of parallel sides equal to the length of the diagonal of a square face for one side and half of that length for the other side. Measure the angle made by the section plane *S-S* with the *XY* line, which gives the required inclination of the section plane with the H.P.

Scanned by CamScanner

Problem 11

A hexagonal prism base 35 mm side and axis 70 mm long is resting on one of its base edges on the ground (H.P.) such that the axis is inclined at 30° to the H.P. and parallel to the V.P. It is cut by an inclined plane inclined at an angle of 45° to the H.P. perpendicular to the V.P. passes at a distance of 25 mm above the base along the axis. Draw F.V., sectional T.V. and true shape of a section.

(June '88, M.U.)

Solution

Refer figure 11.18.

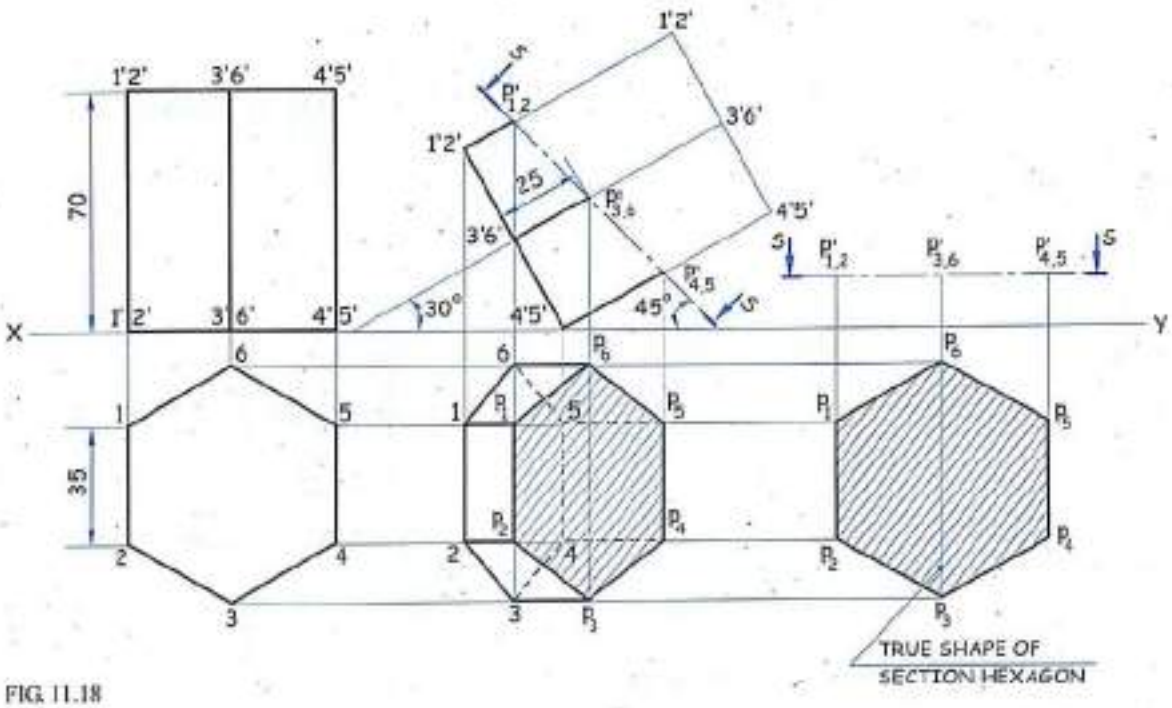

FIG. 11.18

1. Draw the T.V. as a hexagon with side 35 mm such that the side of base *4-5* is perpendicular to the *XY* line and then project the F.V. with the given axis height 70 mm.
2. Redraw the 1st stage with side of base *4'5'* on *XY* and axis making an angle $\theta = 30^\circ$ to the *XY* line and project the T.V. with *care of visibility*.
3. Draw the section plane *S-S* inclined at 45° to *XY* and passing through the point on the axis 25 mm from the base in the F.V.
4. Mark $p_1', p_2', p_3', p_4', p_5', p_6'$ on the respective longer edges where the cutting plane cuts and then project these points vertically down to mark $p_1, p_2, p_3, p_4, p_5, p_6$ in the T.V. on the respective longer edges.
5. Join these points by a straight line and draw the sectional top view.
6. Redraw the section plane *S-S* parallel to the *XY* line as shown.
7. Project the true shape of a section by usual method.

Scanned by CamScanner

Problem 12

A square pyramid side of base 30 mm, axis height 50 mm has its two sides of base parallel to the V.P. It is cut by a section plane which is perpendicular to the V.P. and parallel to the H.P. The section plane cuts the pyramid 22 mm below apex. Assuming the lower part to be retained draw the sectional T.V. and F.V. of a square pyramid.

Solution

Refer figure 11.19 (a) and (b).

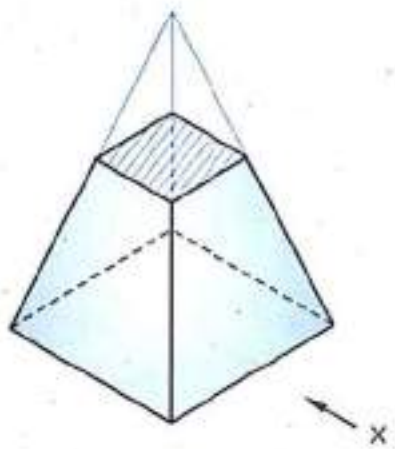

FIG. 11.19 (a)

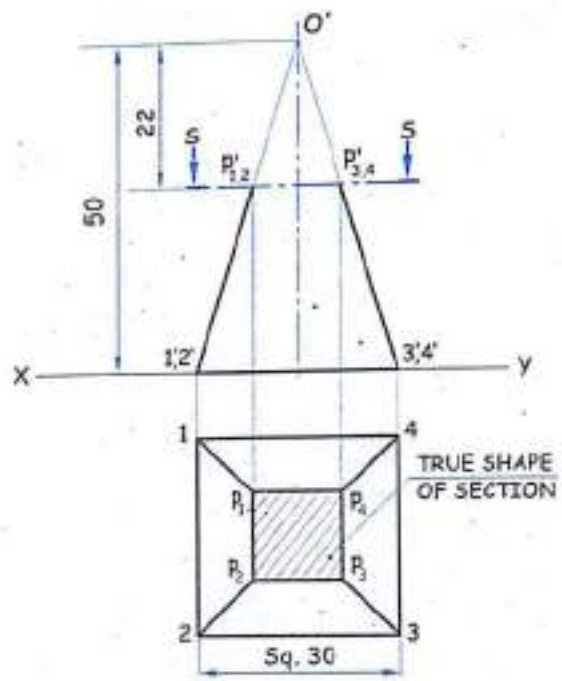

FIG. 11.19 (b)

1. Draw the T.V. of a pyramid as a square with sides 30 mm such that the side *1-2* is perpendicular to *XY* line.
2. Project the F.V. with the given axis height 50 mm.
3. Draw the section plane *S-S* parallel to the *XY* line and 22 mm below the apex.
4. Mark p_1', p_2', p_3', p_4' as a common point between the section plane *S-S* and the respective slant edges.
5. Project the points p_1', p_2', p_3', p_4' vertically down from the F.V. and mark p_1, p_2, p_3, p_4 on the respective slant edges in the T.V.
6. Join p_1, p_2, p_3, p_4 and draw the section lines within, which represents the sectional T.V.

General Practice to Name the Points (Pyramid)

(i) Name the corners of a pyramid as *1,2,3,4* in the T.V.

(ii) Name the slant edges of the F.V. as *O'-1'*, *O'-2'*, *O'-3'*, *O'-4'* respectively.

(iii) Name the points of intersection (common points) of the cutting plane and slant edges as p_1', p_2', p_3', p_4' respectively. (Slant edge *O'-1'* will carry p_1', *O'-2'* will carry p_2', and so on.)

Scanned by CamScanner

Problem 13

A square pyramid side of base 30 mm, axis length 50 mm has its base in the H.P. and two of its side of base perpendicular to the V.P. A section plane cuts the pyramid such that it is perpendicular to the V.P. and inclined at 60° to the H.P. and passes through the point on the axis 15 mm above the base of a pyramid. Draw the F.V., sectional T.V., sectional S.V. and the true shape of a section.

Solution

Refer figure 11.20 (a) and (b).

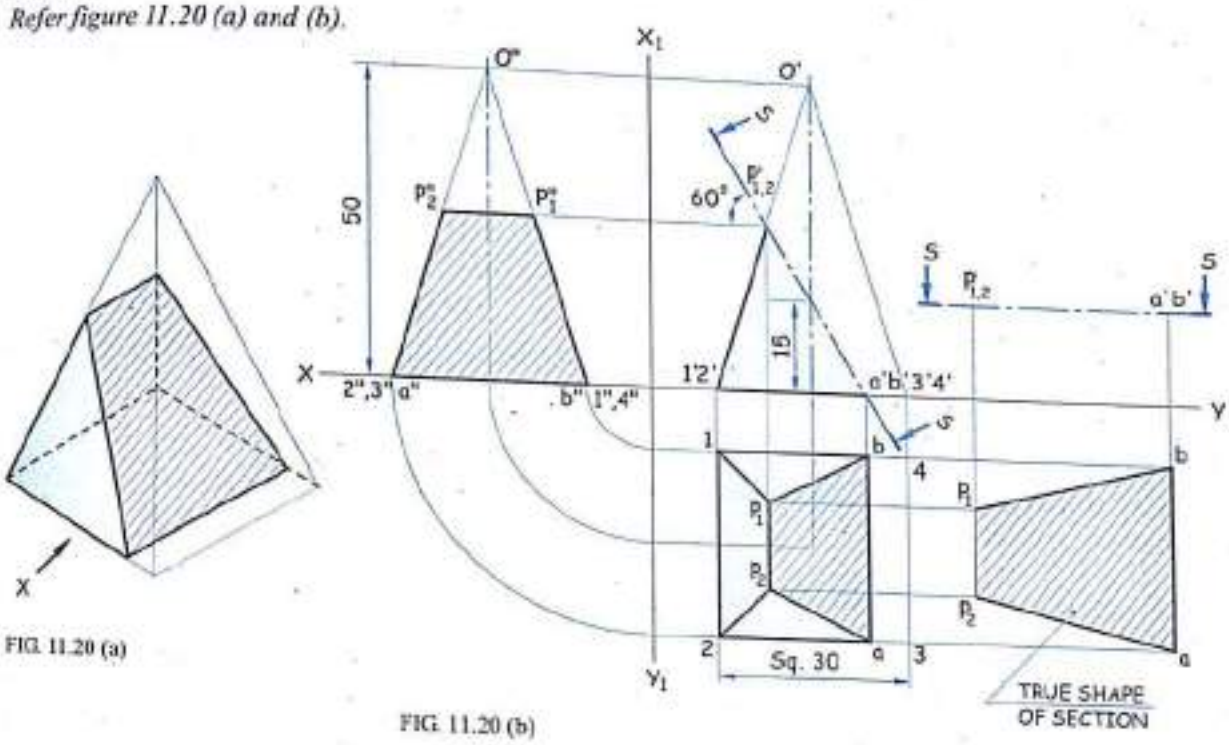

FIG. 11.20 (a)

FIG. 11.20 (b)

1. Draw the T.V. as a square with side *1-2* perpendicular to *XY* and equal to 30 mm.
2. Project the F.V. and S.V. with the given axis height 50 mm.
3. Draw the section plane *S-S* such that it passes through the point on the axis 15 mm above the H.P. and makes an angle 60° to the *XY* line.
4. Name the points on the section plane *S-S* as p_1, p_2, on the slant edge *O'1'* and *O'2'* and name the points *a'* and *b'* on the base line.
5. Through the vertical projector, mark p_1, p_2, *a*, *b* in the T.V. as shown.
6. Join p_1, p_2, *a*, *b* and draw the sectional T.V.
7. Through, horizontal projector mark p_1'', p_2'' in the side view. Also mark *a"* and *b"* on the base line in the side view.
8. Join p_1'', p_2'', *a"*, *b"* and draw the sectional S.V. base line in the side view.
9. Place the section plane *S-S* (p_1', p_2', *a'*, *b'*) parallel to the *XY* line as shown.
10. Project the true shape of a section by usual method.

Scanned by CamScanner

Problem 14(a)

A square pyramid of 30 mm edges of base and 50 mm height is resting on its base with one of the edges of the base perpendicular to the V.P. It is cut by an A.I.P. in such a way that it bisects the axis and is inclined at 45° to the H.P. Draw elevation, sectional plan, sectional end view and the true shape of a section. *(Use first angle method.)*

Solution (a)

Refer figure 11.21 (a) and (b).

1. Draw the T.V. of a pyramid as a square with sides 30 mm such that the side *1-4* is parallel to *XY*.
2. Project the F.V. as a triangle with axis height 50 mm.
3. Draw the section plane *S-S* at an angle of 45° to *XY* such that it bisects the axis. Assume the apex position to be removed.
4. Mark p_1', p_2', p_3', p_4' on the section plane *S-S* and where it cuts the respective slant edges.

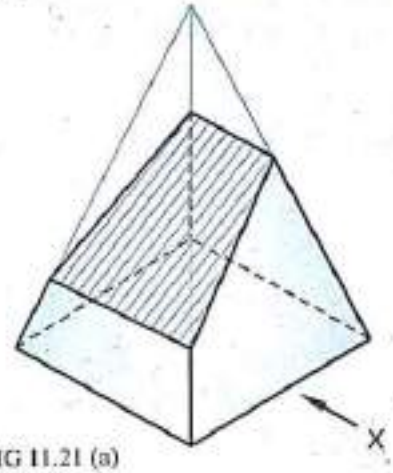

FIG 11.21 (a)

5. Project the points p_1', p_2', p_3', p_4' vertically down and mark p_1, p_2, p_3, p_4 on the respective slant edges in the T.V.
6. Join p_1, p_2, p_3, p_4 and draw the sectional T.V. as shown.
7. Project the points p_1', p_2', p_3', p_4' horizontally from the F.V. and mark p_1'', p_2'', p_3'', p_4'' on the respective slant edges in the S.V.
8. Join p_1'', p_2'', p_3'', p_4'' and draw the sectional side view as shown.
9. Construction of True Shape of the Section
   - (i) Draw the projectors through p_1', p_2', p_3', p_4' perpendicular to section plane *S-S* from F.V. as shown in *figure 11.21 (b)*.
   - (ii) Draw *X'Y'* perpendicular to the drawn projectors.
   - (iii) Transfer the distances of points p_1, p_2, p_3, p_4 of the T.V. from the *XY* line to the new reference *X'Y'* on the repective projectors and mark p_1, p_2, p_3, p_4 respectively as shown.
   - (iv) Join p_1, p_2, p_3, p_4 which is the true shape of a section.

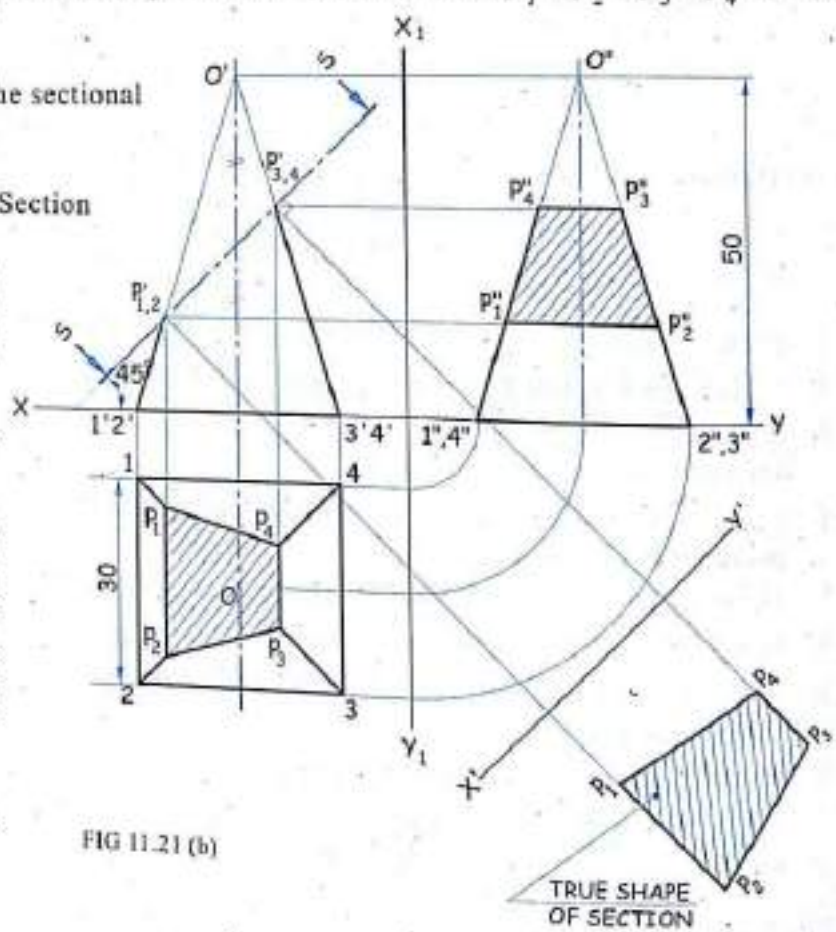

FIG 11.21 (b)

Scanned by CamScanner

Problem 14(b)

A square pyramid of 30 mm edges of base and 50 mm height is resting on its base with one of the edges of the base perpendicular to the V.P. It is cut by an A.I.P. in such a way that it bisects the axis and is inclined at 45° to the ground. Draw elevation, sectional plan, sectional end view and the true shape of a section. *(Use third angle method.)*

Solution (b)

Refer figure 11.22.

1. Draw the T.V. of a pyramid as a square with sides 30 mm such that the side *1-4* is parallel to *XY*.
2. Project the F.V. as a triangle with axis height 50 mm.
3. Draw the section plane *S-S* at an angle of 45° to *GL* such that it bisects the axis. Assume the apex position to be removed.
4. Mark p_1', p_2', p_3', p_4' on the section plane *S-S* and where it cuts the respective slant edges.
5. Project the points p_1', p_2', p_3', p_4' vertically up and mark p_1, p_2, p_3, p_4 on the respective slant edges in the T.V.
6. Join p_1, p_2, p_3, p_4 and draw the sectional T.V. as shown.

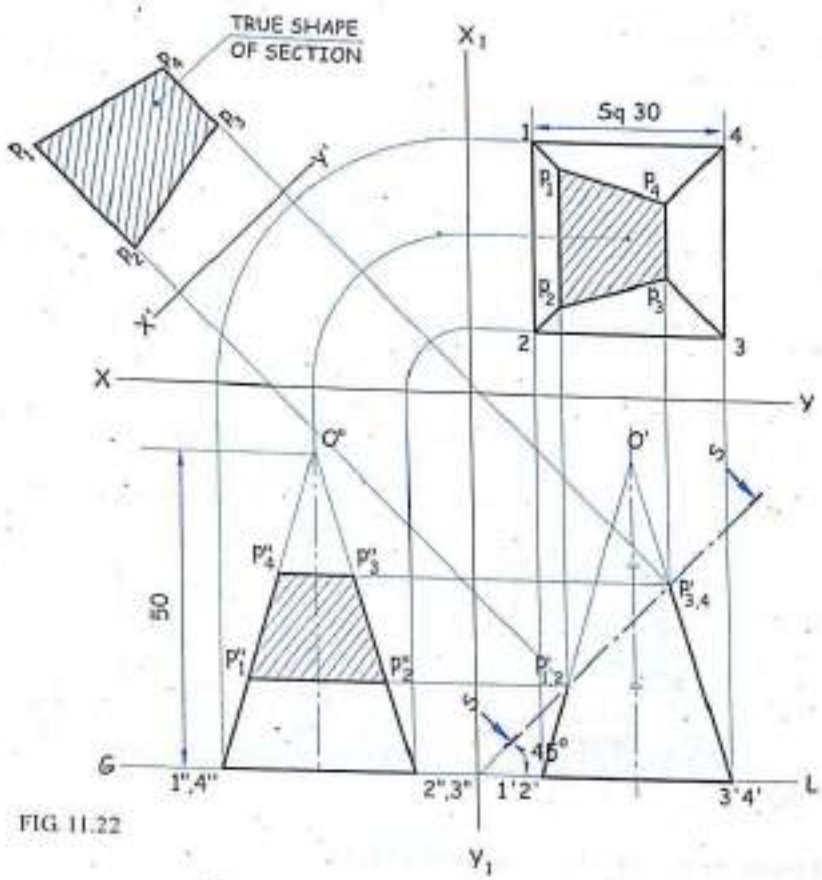

FIG. 11.22

7. Project the points p_1', p_2', p_3', p_4' horizontally from the F.V. and mark p_1'', p_2'', p_3'', p_4'' on the respective slant edges in the S.V.
8. Join p_1'', p_2'', p_3'', p_4'' and draw the sectional side view as shown.
9. Construction of True Shape of the Section
   - **(i)** Draw the projectors through p_1', p_2', p_3', p_4' perpendicular to section plane *S-S* from F.V. as shown in *figure 11.22*.
   - **(ii)** Draw *X'Y'* perpendicular to the drawn projectors.
   - **(iii)** Transfer the distances of points p_1, p_2, p_3, p_4 of the T.V. from the *XY* line to the new reference *X'Y'* on the respective projectors and mark p_1, p_2, p_3, p_4 respectively as shown.
   - **(iv)** Join p_1, p_2, p_3, p_4 which is the true shape of a section.

Scanned by CamScanner

Problem 14(c)

A square pyramid of 30 mm edges of base and 50 mm height is resting on its base with one of the edges of the base perpendicular to the V.P. It is cut by an A.I.P. in such a way that it bisects the axis and is inclined at 45° to the H.P.. Draw elevation, sectional plan, sectional end view and the true shape of a section. (Draw the true shape of section by placing the section plane S-S parallel to reference line.)

Solution (c)

Refer figure 11.23.

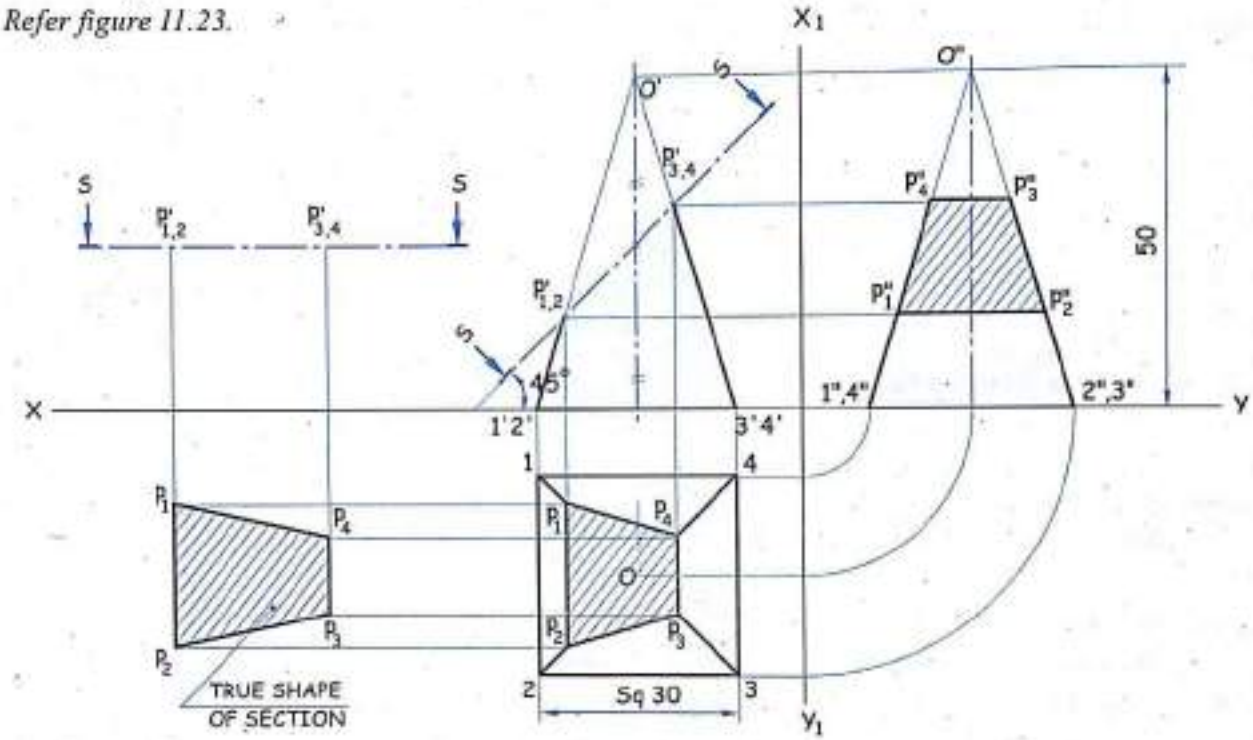

FIG.11.23

Follow steps 1 to 8 from solution 14 (a).

9. Construction of True Shape of the Section

(i) Place the section plane *S-S* with points p_1', p_2', p_3', p_4' parallel to the *XY* line as shown in *figure 11.23*.

(ii) Draw the projectors through the points p_1', p_2', p_3', p_4' vertically down.

(iii) Draw the horizontal projectors through p_1, p_2, p_3, p_4 from the T.V.

(iv) Mark p_1, which is an intersection of the vertical projector through p_1' (F.V.) and the horizontal projector through p_1 (T.V.).

(v) Similarly, mark p_2, p_3, p_4 as shown.

(vi) Join p_1, p_2, p_3, p_4 which is the true shape of a section.

Scanned by CamScanner

Problem 15

A square pyramid edge of base 30 mm, axis height 50 mm rests on its base in the H.P. with one of the edge of base parallel to the V.P. A sectional plane which is the H.T. cuts the pyramid at an angle 45° to the V.P. and is 6 mm away from the axis of a pyramid. Draw the T.V., sectional F.V., sectional S.V. and the true shape of a section.

Solution

Refer figure 11.24 (a) and (b).

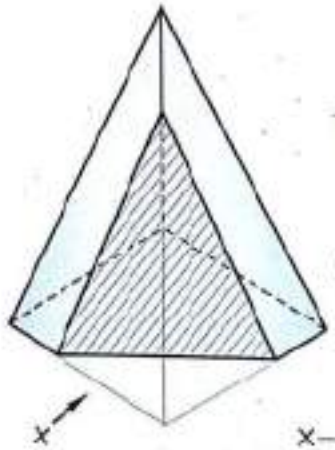

FIG. 11.24 (a)

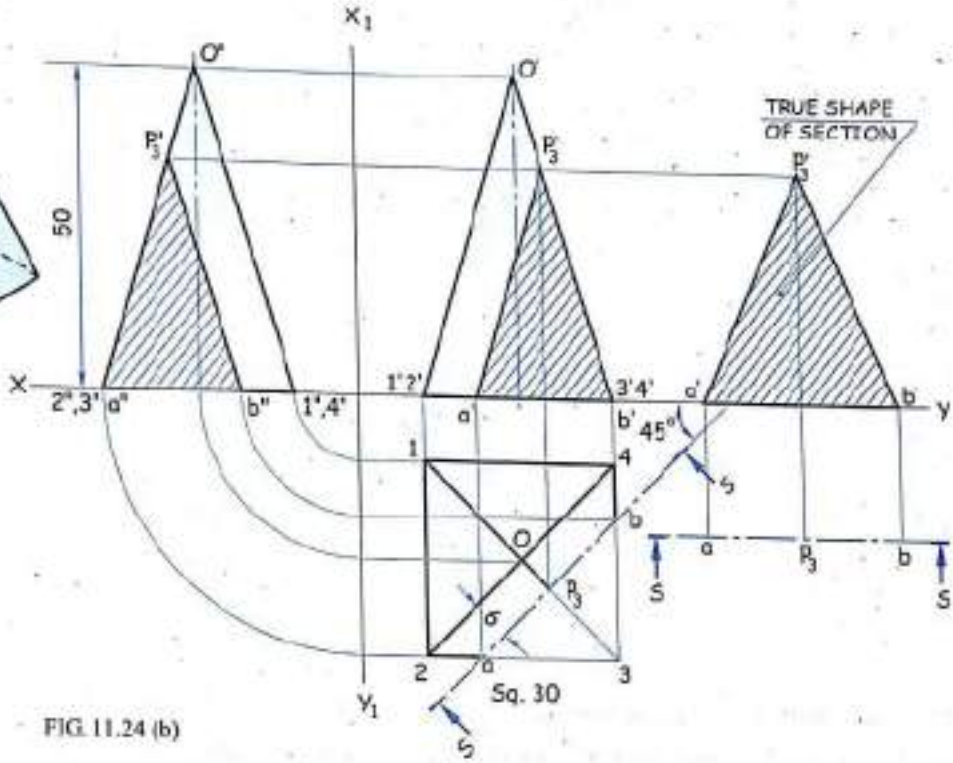

FIG. 11.24 (b)

1. Draw the T.V. and project the F.V. and the S.V. by usual method.
2. Draw the section plane *S-S* inclined at 45° to the *XY* line and at a distance of 6 mm from the axis in the T.V. as shown. Assume the minor portion of a pyramid to be removed.
3. Name the cut points by the section plane a, p_3, b as shown.
4. Project these points vertically up and mark a', p'_3, b' respectively.
5. Join a', p'_3, b' and draw the sectional F.V.
6. Project the horizontal point p'_3 from the F.V. and mark p''_3 in the S.V., also mark a'' and b'' through the projector of a and b from the T.V.
7. Join a'', p''_3, b'' and draw the sectional S.V.
8. Place the section plane *S-S* (a, p_3, b) parallel to the *XY* line.
9. Project the true shape of a section by usual method.

Scanned by CamScanner

Problem 16

A square pyramid, base 30 mm and axis 40 mm long stands vertically on the H.P. with the edges of a base equally inclined to the V.P. It is cut by the section plane perpendicular to the V.P., inclined at 45° to the H.P. and passing through the point on the axis 25 mm from the apex. Draw the F.V., sectional T.V., sectional S.V. and the true shape of a section.

Solution

Refer figure 11.25 (a) and (b).

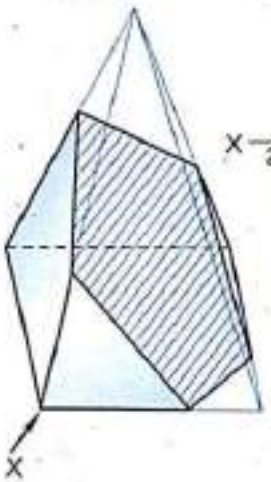

FIG. 11.25 (a)

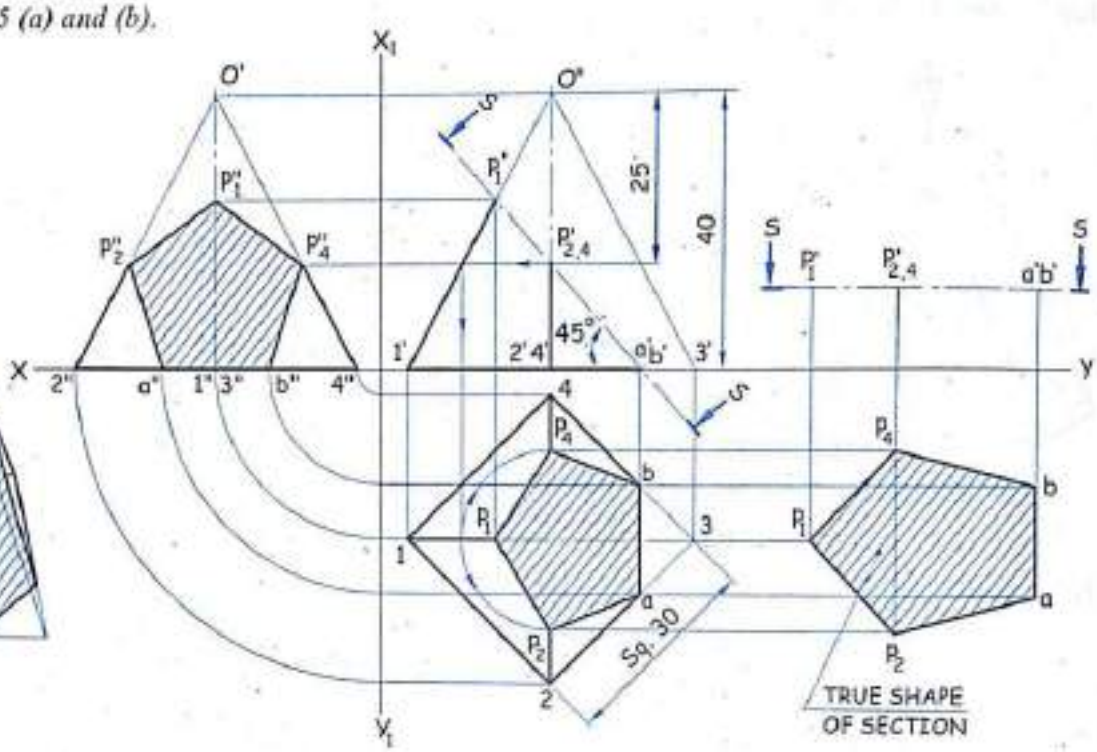

FIG. 11.25 (b)

1. Draw the T.V. as a square of side 30 mm with sides equally inclined to XY (i.e. at 45°).
2. Project the F.V. and the S.V. with the given axis height 40 mm by usual method.
3. Draw the section plane S-S inclined at 45° to the XY line and passing that point on the axis 25 mm below the apex.
4. Mark p_1', p_2', p_4', a', b' on the section plane S-S as shown.
5. Project these points vertically down and mark p_1, p_2, p_4, a, b in the T.V.
6. Join p_1, p_2, a, b, p_4 and draw the sectional T.V.
7. Project the points p_1', p_2', p_4' horizontally and mark p_1'', p_2'', p_4'' in the S.V., also mark a'' and b'' in the S.V. from a projector drawn through the T.V.
8. Join a'', p_2'', p_1'', p_4'', b'' and draw the sectional side view.
9. Place the section plane S-S (p_1', p_2', p_4', a', b') parallel to the XY line.
10. Project the true shape of a section by usual method.

Scanned by CamScanner

Problem 17

A hexagonal pyramid of 35 mm side of base and 65 mm axis length rest on its base on the H.P. with one of its side of a base perpendicular to the V.P. It is cut by the section plane whose H.T. makes an angle 30° with the *XY* and is 15 mm away from the axis of a pyramid. Draw the T.V., sectional F.V., sectional S.V. and the true shape of a section.

Solution

Refer figure 11.26.

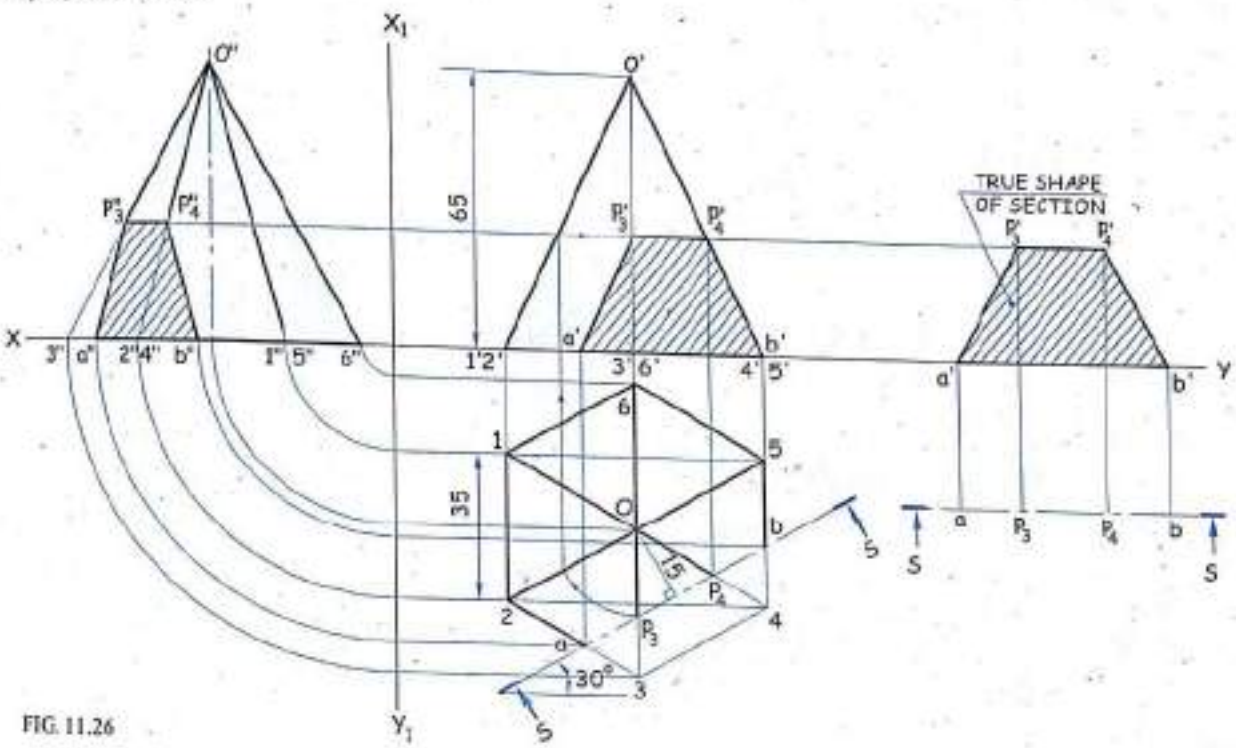

FIG. 11.26

1. Draw the T.V. and then project the F.V. and the S.V.
2. Draw the section plane *S-S* inclined at 30° to the *XY* line and at a distance of 15 mm from the axis.
3. Mark *a* and *b* where the section plane cuts the side of base *2-3* and *4-5* respectively, also mark p_3 and p_4 on the slant edge *O -3*and *O – 4* respectively.
4. Project these points vertically up and mark a', b', p_3', p_4' in the F.V. as shown.
5. Join the points a', p_3', p_4', b' and draw the sectional F.V.
6. Project p_3' and p_4' horizontally and mark p_3'' and p_4'' in the S.V. on the respective slant edges also mark a'' and b'' in the S.V. with the help of a projector drawn through *a* and *b* from the T.V.
7. Join a'', p_3'', p_4'', b'' and draw the sectional S.V.
8. Place the section plane *S-S* parallel to the *XY* line as shown.
9. Project the true shape of a section by usual method.

Scanned by CamScanner

Problem 18

A hexagonal pyramid, side of base 30 mm and axis height 90 mm lies in the H.P. on one of its triangular face and the axis is parallel to the V.P. It is cut by the vertical cutting plane, inclined at 30° to the V.P. and passing through the point on the axis, 25 mm from the base. The apex of a pyramid is to be retained. Draw the sectional F.V., T.V. and the true shape of a section.

Solution

Refer figure 11.27.

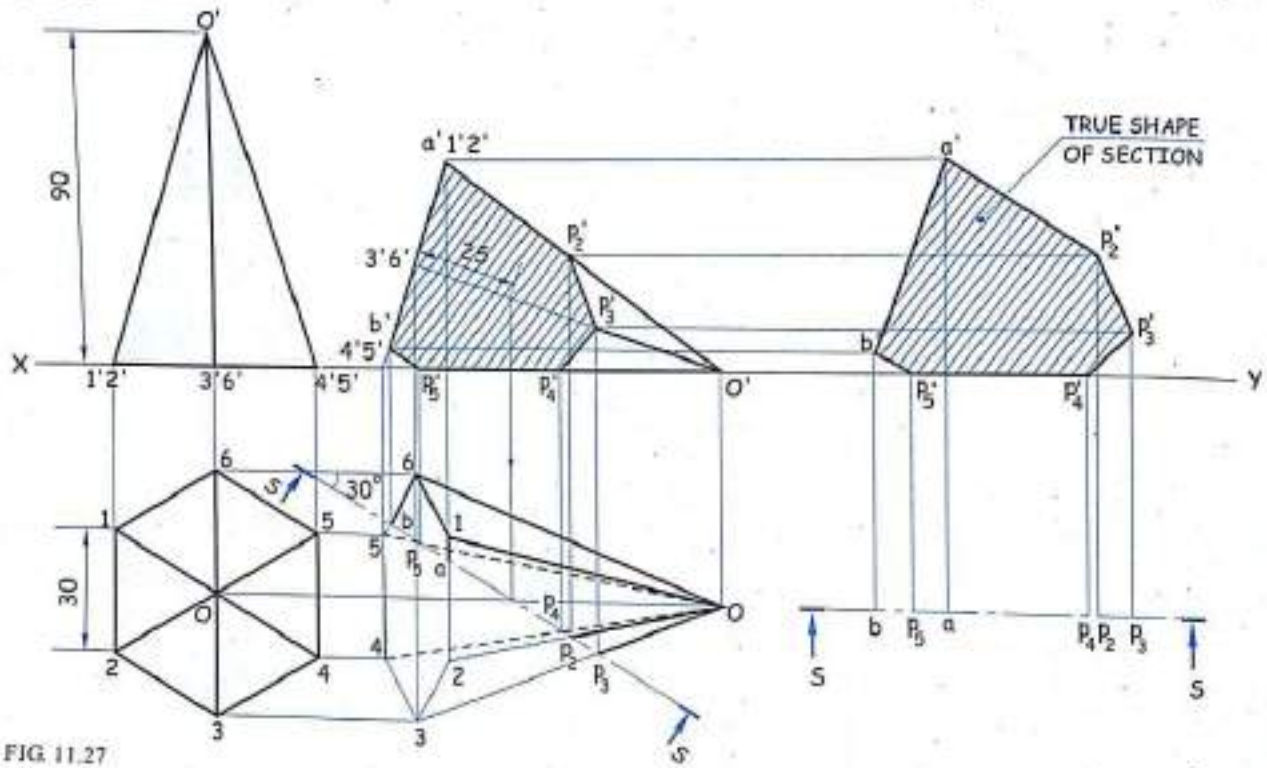

FIG. 11.27

1. Draw the T.V. as a regular hexagon of side 30 mm such that one of the side of base is perpendicular to the V.P. say *4-5* and then project the F.V. with axis height 90 mm.
2. Tilting the pyramid towards the right place, the triangular face *O'4'5'* (line view) on the *XY* line and obtain the F.V. and T.V. of second stage with care of visibility.
3. In the F.V., mark a point 25 mm from the base on the axis. Project this point vertically down and mark its T.V. on the axis. Draw the section plane *S-S* at an angle 30° to the *XY* line passing through this marked point in the T.V.
4. Mark the points p_3, p_2, p_4, p_5 where the section plane cuts the respective slant edges also mark *a* and *b* where section plane cuts the side of base *1-2* and *5-6* respectively.
5. Project these points vertically up and mark $p_3', p_2', p_4', p_5', a', b'$ as shown.
6. Join $a', b', p_5', p_4', p_3', p_2', a'$ by a straight line and draw the sectional F.V.
7. Place the cutting plane *S-S* parallel to the *XY* line as shown.
8. Project the true shape of a section by usual method.

Scanned by CamScanner

Problem 19

A pentagonal pyramid edge of base 40 mm long and height 75 mm is lying in the H.P. on the triangular face with an axis parallel to the V.P. It is cut by the section plane perpendicular to the H.P., inclined at 30° to the V.P. and bisecting the axis of a pyramid. Draw the sectional F.V., T.V. and the true shape of a section of the pyramid when the apex is retained. ***(May '12, M.U.)***

Solution

Refer figure 11.28.

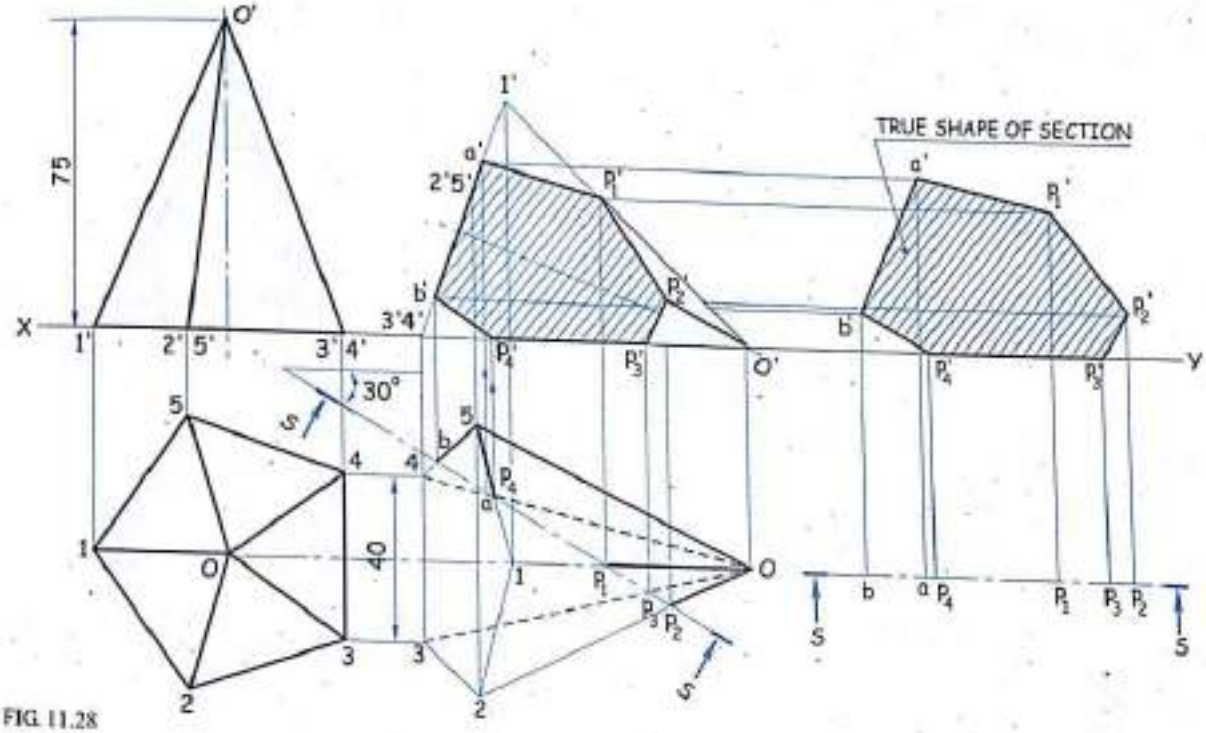

FIG. 11.28

1. Draw the T.V. as a pentagon with side of base *3-4* perpendicular to the *XY* line and then project the F.V. with the given axis length.
2. Tilt the pyramid towards right, so that it rests on the triangular face and obtain the second stage by usual method.
3. Locate the mid-point of an axis in the T.V. and draw the section plane *S-S* inclined at 30° to the *XY* line passing through the located mid-point.
4. Mark p_2, p_3, p_1, p_4 where the section plane cuts the respective slant edges, also mark *a* and *b* where section plane cuts the side of base *1-5* and *4-5* respectively.
5. Project these points vertically up and mark p_2', p_3', p_1', p_4' on the respective slant edges in the F.V., also mark a', b' on the base line in the F.V.
6. Join a', p_1', p_2', p_3', p_4', b' by a straight line and draw the sectional F.V.
7. Place the cutting plane *S-S* parallel to the *XY* line as shown.
8. Project the true shape of a section by usual method.

Scanned by CamScanner

Problem 20

A pentagonal pyramid side of base 40 mm and height 80 mm is resting on the H.P. on one of its base corner, with the base making an angle of 45° with the H.P. and the two base edges containing that corner equally inclined to the ground (H.P.) It is cut by a section plane such that the H.T. and the V.T. of which are perpendicular to the *XY* line and passes through the corner on which it is resting. Draw the F.V., T.V. and sectional left side view retaining the apex. Indicate the true shape of a section. *(Dec. '94, M.U.)*

Solution

Refer figure 11.29.

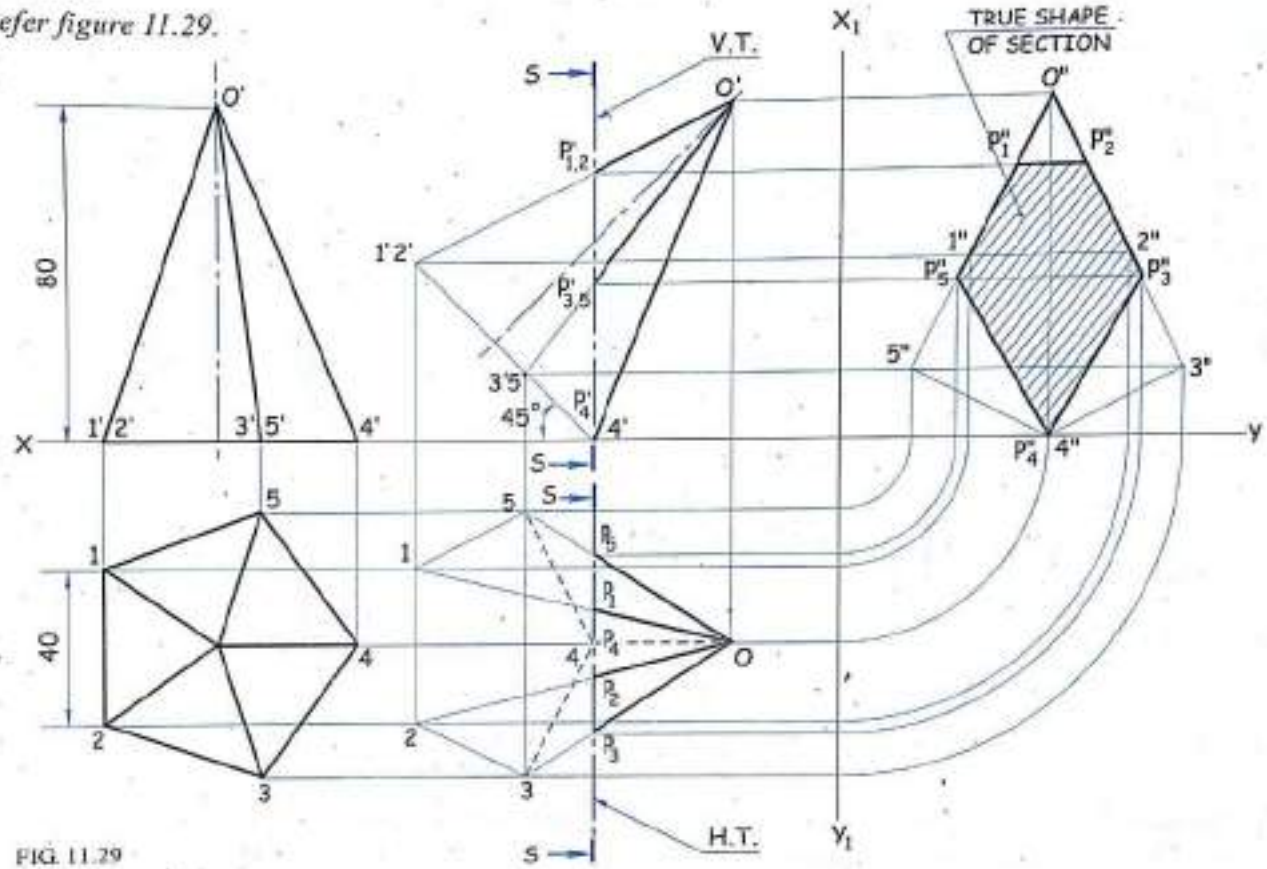

FIG. 11.29

1. Draw the T.V. as a regular pentagon with side 40 mm such that the line joining the corner *4* and apex *O* should be parallel to the *XY* line and project the F.V. with axis height 80 mm.
2. Redraw the F.V. of I^st stage such that the corner *4'* is on the *XY* line and base inclined at 45° to the *XY* line and then project the T.V. and S.V. with *care of visibility* by usual method.
3. Draw the cutting plane, H.T. and V.T., which is perpendicular to both the reference planes passing through the corner *4* (T.V.) and *4'* (F.V.). Retain the apex part as per the given condition.
4. Mark p_1', p_2', p_3', p_5', p_4' in the F.V. and p_1, p_2, p_3, p_4, p_5 in the T.V. where the section plane cuts the respective slant edges.
5. Draw the horizontal projectors through p_1', p_2', p_3', p_5', p_4' from the F.V. and mark p_1'', p_2'', p_3'', p_5'', p_4'' in the S.V. on the respective slant edges.
6. Join these points in a proper sequence and draw the sectional side view.
7. Section obtained in the side view is the true shape of a section.

Scanned by CamScanner

Problem 21

A hexagonal pyramid, base 25 mm and axis 65 mm long is resting on its base on the H.P. with two sides of base parallel to the V.P. It is cut by a section plane perpendicular to the V.P., inclined at 45° to the H.P. and intersecting the axis at a point 22 mm above the base. Draw the F.V., sectional T.V. and the true shape of a section.

Solution

Refer figure 11.30.

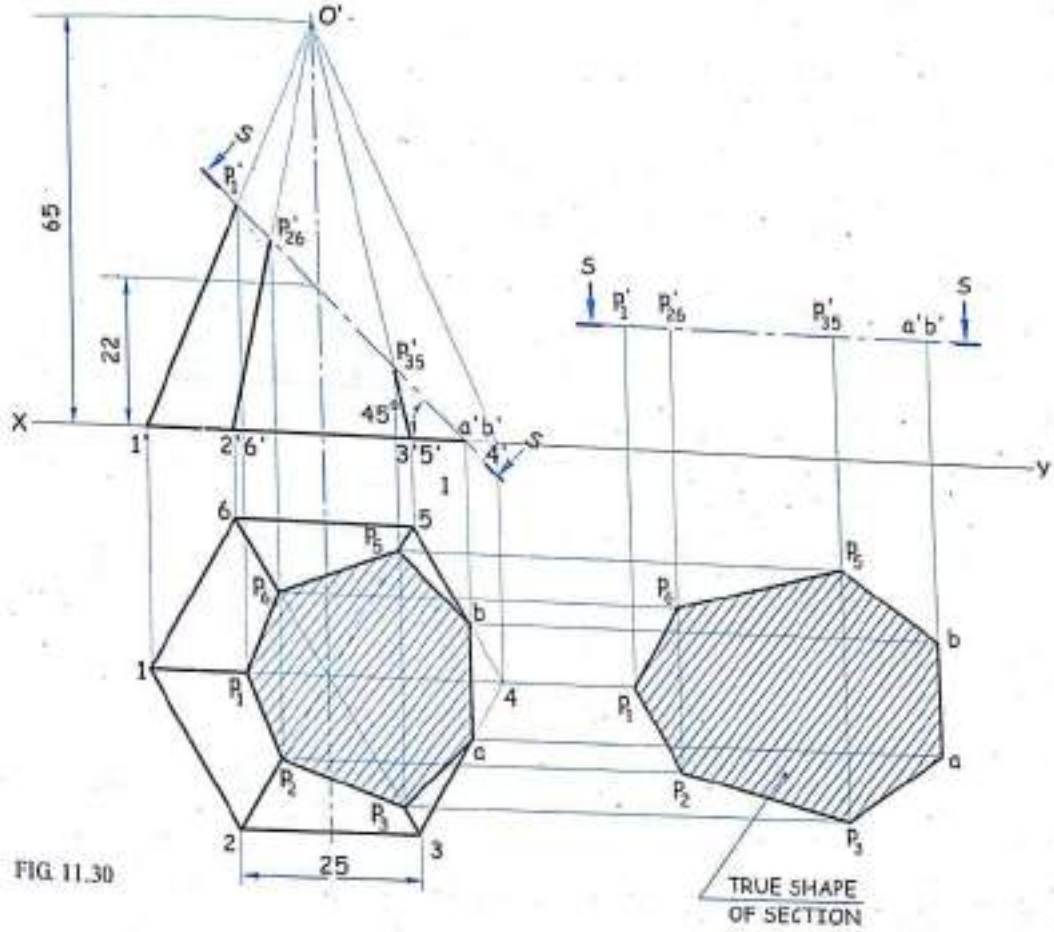

FIG. 11.30

1. Draw the T.V. of a pyramid as a hexagon with sides 25 mm such that two of its sides are parallel to the *XY* line and project the F.V. with the given axis height 65 mm.
2. Draw the section plane *S-S* inclined at 45° to the *XY* line and passes through the point on the axis 22 mm above the base.
3. Mark p_1', p_2', p_6', p_3', p_5' where section plane *S-S* cuts to the respective slant edges. Also mark *a'b'* where the section plane *S-S* cuts the base of a pyramid.
4. Project these points vertically down and mark p_1, p_2, p_6, p_3, p_5 on the respective slant edges and also mark *a* and *b* on the base in the T.V.
5. Join $a, p_3, p_2, p_1, p_6, p_5, b$ by the straight line and draw the sectional top view.
6. Redraw the section plane *S-S* parallel to the *XY* line as shown.
7. Project the true shape of a section by usual method.

Scanned by CamScanner

Problem 22

A square pyramid, side of base 40 mm and 65 mm height stands vertically on the H.P. with the pair of its triangular faces perpendicular to the V.P. It is cut by an A.I.P. in such a way that the true shape of a section is a trapezium whose parallel sides measures 40 mm and 20 mm. Draw the F.V., sectional T.V. and the true shape of a section.

Solution

Refer figure 11.31.

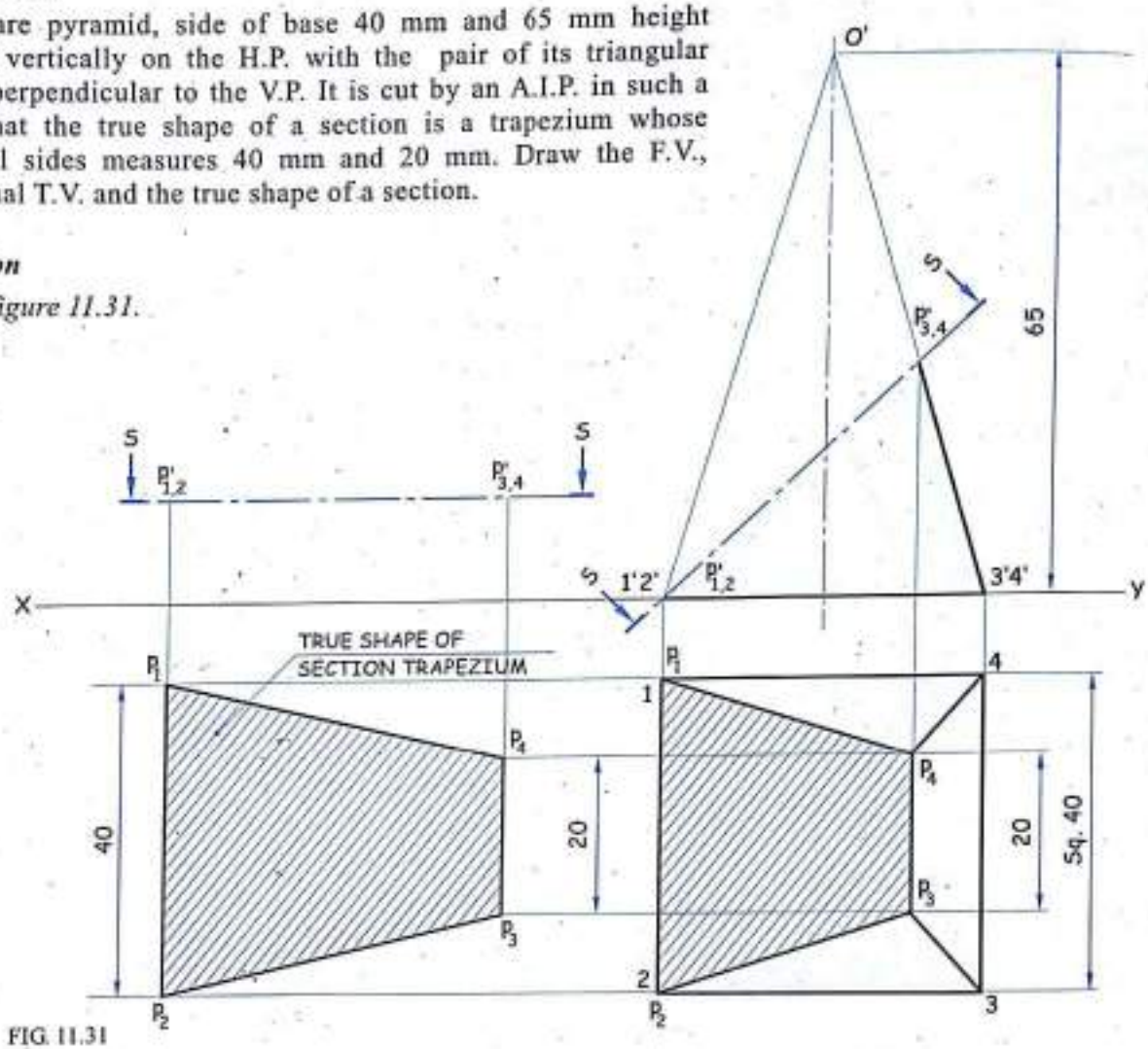

FIG. 11.31

1. Draw the T.V. as a square with sides 40 mm such that the side of base *1-2* and *3-4* are perpendicular to *XY* (triangular faces *O'1'2'* and *O'3'4'* becomes perpendicular to the V.P.) and project the F.V. with the axis height 65 mm.
2. Set the vertical line of 20 mm (perpendicular to *XY*) between slant edges *O-3* and *O-4* and mark p_3 and p_4 in the T.V. Set another vertical line of 40 mm between slant edges *O-1* and *O-2* and mark p_1 and p_2 in the T.V.
3. Join p_1, p_2, p_3, p_4 by the straight line and draw the sectional T.V.
4. Project the points p_1, p_2, p_3, p_4 vertically up and mark p_1', p_2', p_3', p_4' on the respective slant edges in the F.V.
5. Draw the section plane *S-S* passing through $p'_{1,2}$ - $p'_{3,4}$ in the F.V.
6. Redraw the section plane *S-S* parallel to the *XY* line.
7. Project the true shape of a section, which is a trapezium having parallel sides 40 mm and 20 mm as required.

Scanned by CamScanner

Problem 23

A square pyramid, side of base 40 mm and axis length 60 mm has one of its triangular face on the H.P. with axis parallel to the V.P. It is cut by an A.V.P. passing through the centre of gravity of a solid and inclined at 30° to the V.P. and removing the apex. Draw the sectional elevation, plan and show true shape of a section.

Solution

Refer figure 11.32.

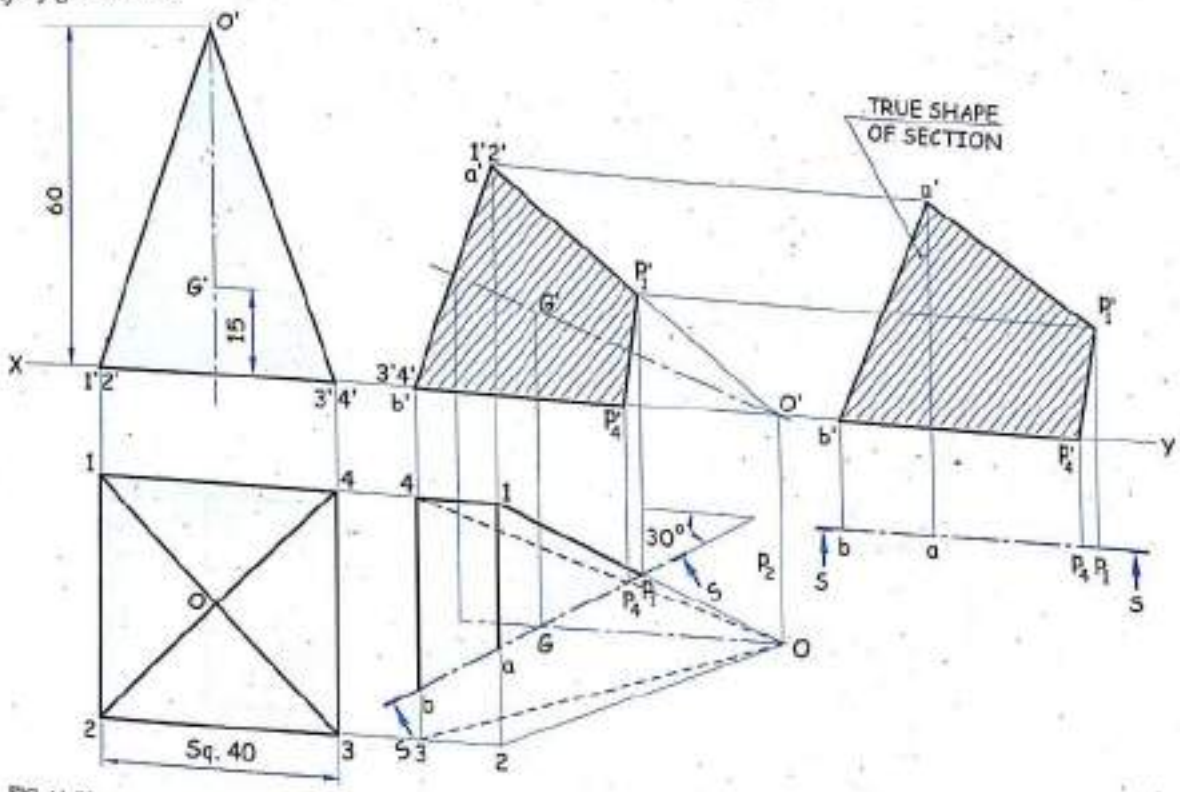

FIG. 11.32

1. Draw the T.V. as a square with sides *4-3* perpendicular to *XY* and project the F.V.
2. Redraw the I[st] stage of the F.V. such that the triangular face *O'3'4'* (line view) lies on the *XY* line (in the H.P.) and project the T.V. with *care of visibility*.
3. Mark *G'* on the axis at a distance of H/4 = 60/4 = 15 mm from the base and by projecting this point vertically down, mark *G* on the axis in the T.V.
4. Draw the A.V.P. (section plane *S-S*) passing through *G* (centre of gravity of a square pyramid) at an angle 30° to the *XY* line in the T.V.
5. Mark p_1, p_4 where the section plane cuts to the respective slant edges and also mark *a,b* where the section plane cuts to the base.
6. Project these points vertically up and mark p_1', p_4', a', b' respectively.
7. Join these points and draw the sectional F.V.
8. Redraw the section plane *S-S* parallel to the *XY* line and project the true shape of a section by usual method.

Scanned by CamScanner

Problem 24

A tetrahedron of 70 mm side is resting on one of the faces in the H.P. with a side of that face perpendicular to the V.P. It is cut by an A.I.P., so that the true shape of a section is a square. Set the required cutting plane and draw the sectional plan, elevation and the true shape of a section. Measure the side of a square.

Solution

Refer figure 11.33.

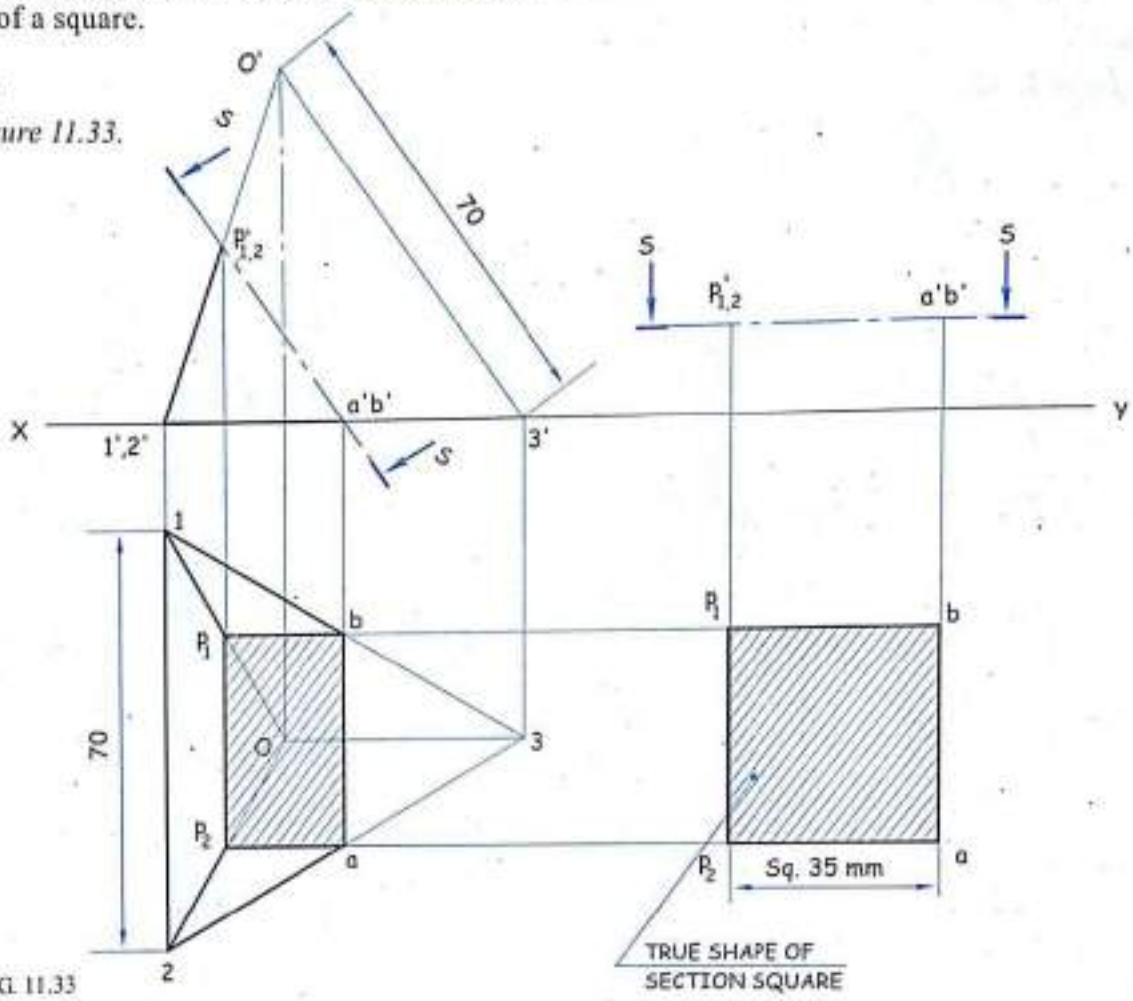

FIG. 11.33

1. Draw the T.V. and then project the F.V.
2. Mark a and b as the mid-point of side *2-3* and *1-3* respectively in the T.V. Draw a parallel line to the XY line through the points a and b and mark p_2 and p_1 on the respective slant edges.
3. Join a, b, p_1, p_2 and draw the sectional T.V.
4. Draw the projector vertically up through a, b and p_1, p_2 and mark a', b' and p_1', p_2' as shown in the F.V.
5. Draw the section plane *S-S* through p_1', p_2' and a', b'.
6. Place the section plane *S-S* parallel to the XY line.
7. Project the true shape of a section by usual method.
8. Since the section plane in elevation cuts 4 edges, we get a polygon of 4 side and it is so arranged that, $p_1\ p_2 = ab$ in the T.V. and also $p_1'\ b' = p_2'\ a'$. Hence the true shape of a section is a square.

Scanned by CamScanner

Problem 25

A tetrahedron of 55 mm long edges is lying on the H.P. on one of its faces with an edge of that face perpendicular to the V.P. It is cut by a section plane perpendicular to the both H.P. and V.P. in such a way that the true shape of a section is an isosceles triangle of 36 mm height. Draw elevation, plan and end view when the major part of an object is assumed to be retained.

Solution

Refer figure 11.34.

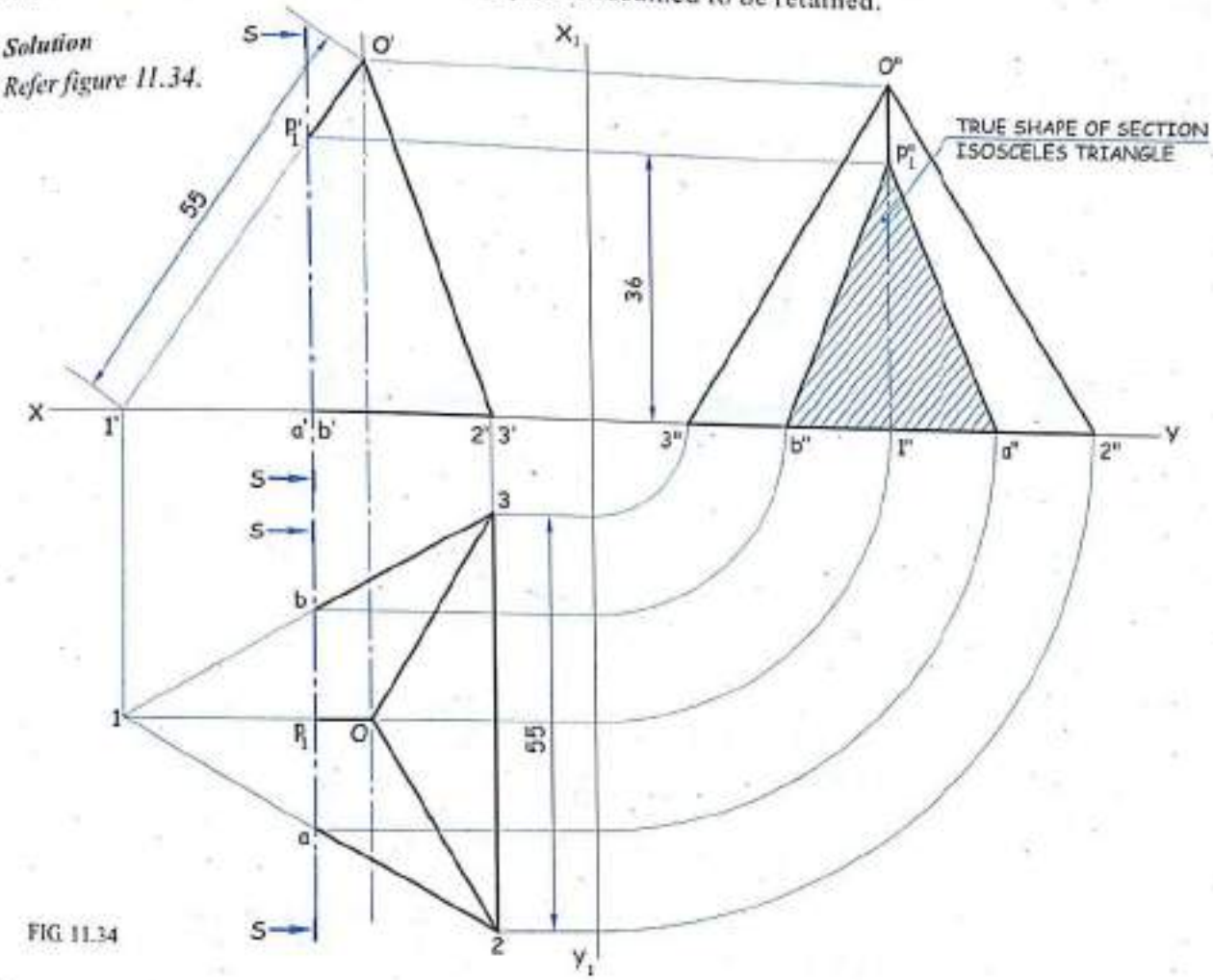

FIG. 11.34

1. Draw the T.V. of a tetrahedron as an equilateral triangle with edge of base *2-3* perpendicular to *XY* and project the F.V. and S.V.
2. Mark the point p_1'' 36 mm above the base in the S.V.
3. Project p_1'' horizontally and mark p_1' in the F.V.
4. Draw the section plane *S-S* perpendicular to the *XY* line and passing through p_1'. (Section plane *S-S* is perpendicular to the H.P. and the V.P.)
5. Mark the points *a* and *b* on the edge of base *1-2* and *1-3* respectively, where the section plane *S-S* cuts the base edge in the T.V.
6. Draw the projector through the points *a* and *b* and mark *a"* and *b"* on the base in the S.V.
7. Join p_1'' *a" b"* by the straight lines and draw the sectional side view which also represents the true shape of a section.

Scanned by CamScanner

Problem 26

A tetrahedron of 70 mm long edges is lying on the ground (H.P) on one of its faces with an edge perpendicular to the V.P. It is cut by the section plane which is perpendicular to the V.P. so that the true shape of the section is an equilateral triangle of side 50 mm. Find the inclination of a section plane with the H.P. and draw the F.V., sectional T.V. and the true shape of a section. *(Dec. '97, M.U)*

Solution

Refer figure 11.35.

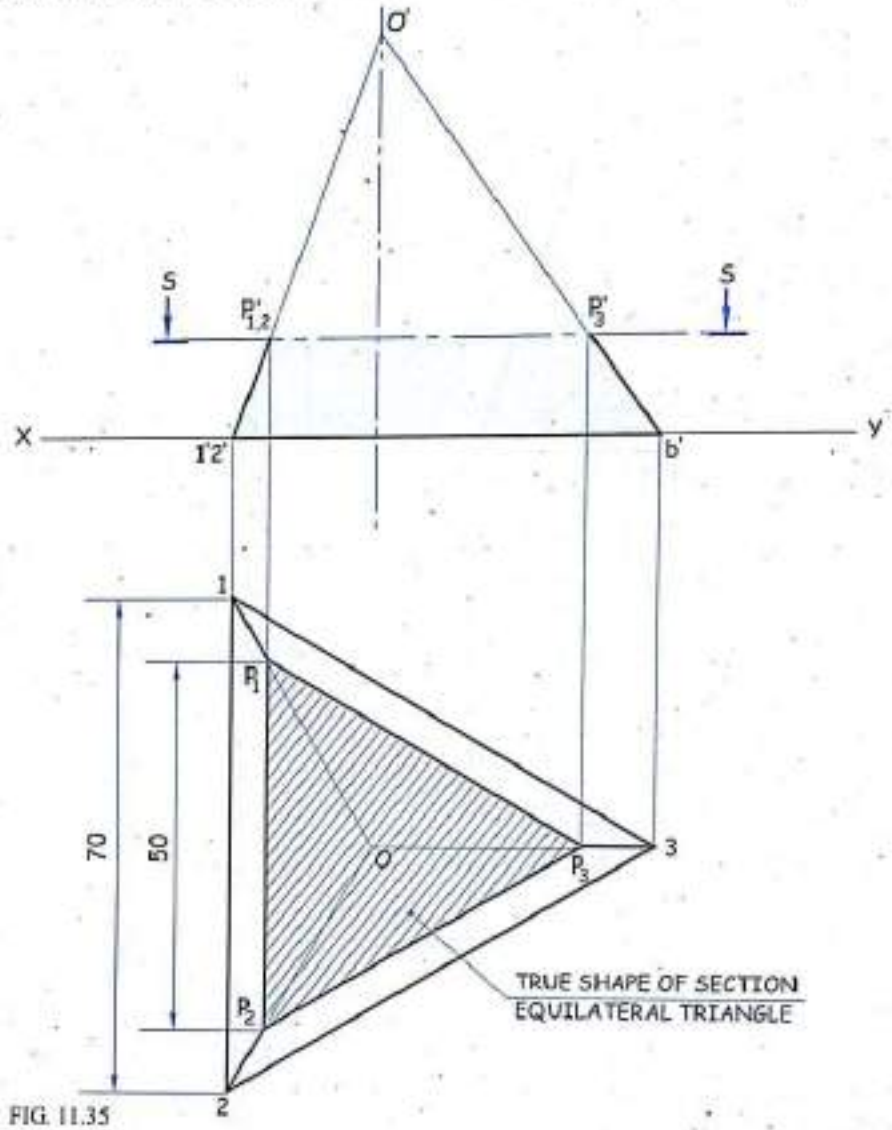

FIG. 11.35

1. Draw the T.V. of as an equilateral triangle with one of the side perpendicular to *XY* (perpendicular to the V.P.) and project the F.V. of the tetrahedron by usual method.
2. Set a line parallel to *1-2* such that it measures 50 mm when it touches to *O-1* and *O-2*.
3. Mark p_1 and p_2 respectively on *O-1* and *O-2*. Draw equilateral triangle of side 50 mm and mark p_3 on *0-3* in the T.V.
4. Project p_1, p_2, p_3 vertically upwards and mark p_1', p_2', p_3' on the respective edges and draw a section plane *S-S* passing through $p_{1,2}'$ and p_3' which is a horizontal cutting plane perpendicular to the V.P. and parallel to the H.P. Inclination of the section plane *S-S* with the H.P. will be zero.
5. Draw the sectional T.V., which also represents the true shape of a section.

Scanned by CamScanner

Problem 27

A pentagonal pyramid side of base 35 mm and height 70 mm rests on its base on the H.P. with one side of the base perpendicular to the V.P. It is cut by a plane which is perpendicular to the V.P., such that the true shape of the section is an isosceles triangle of maximum possible base and maximum height. Draw its F.V., sectional T.V. and true shape of the section. ***(May '98, M.U)***

Solution

Refer figure 11.36.

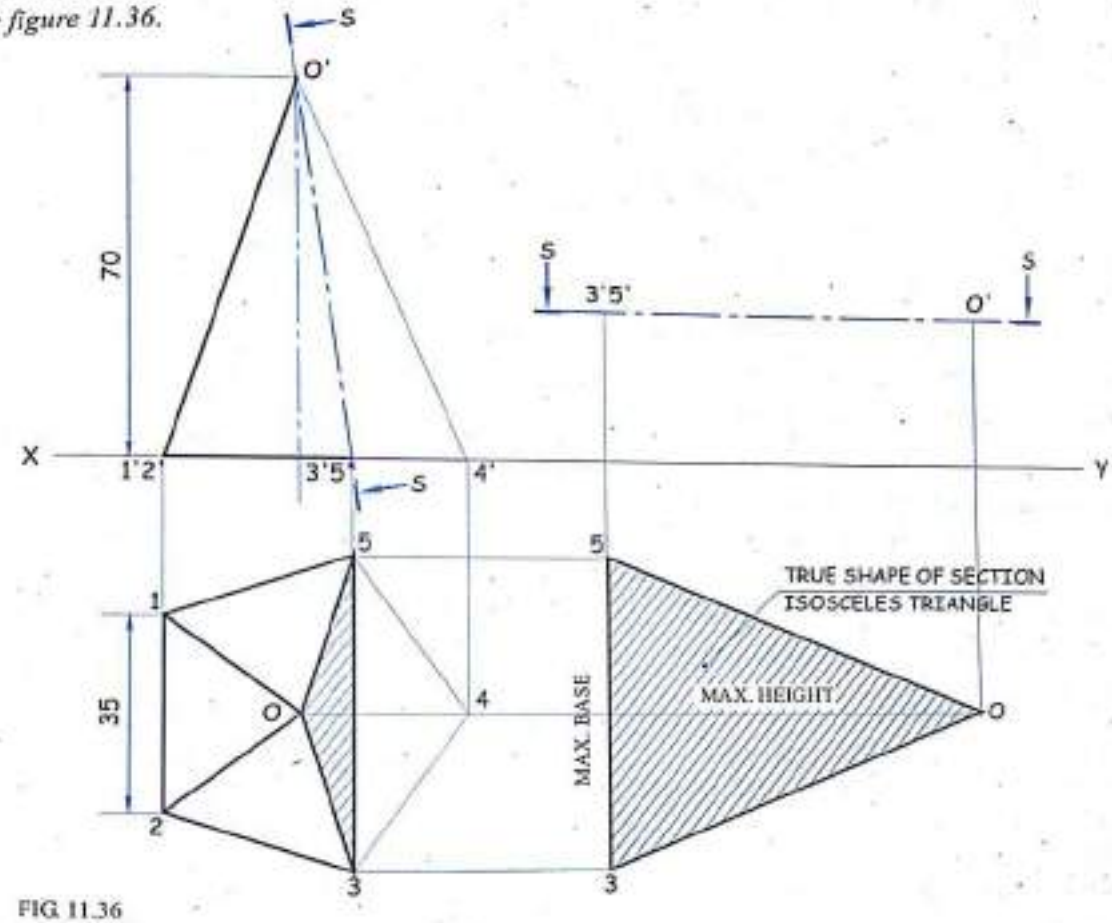

FIG. 11.36

1. Draw the T.V. of as a pentagon with sides 35 mm such that one of its sides is perpendicular to the *XY* (say *1-2*). Project the F.V. with the axis height 70 mm.
2. Since the required true shape of a section is an isosceles triangle of maximum possible base and maximum height, the corner *3* and *5* will give the maximum size of base and apex of the pyramid will give the maximum height of the triangle. So in the T.V. join *O35* and draw the sectional T.V. will give the maximum height of the triangle.
3. Project the points *3* and *5* vertically up on the base and mark *3'* and *5'* in the F.V.
4. Draw the section plane *S-S* passing through *O'* and *3'5'*.
5. Redraw the section plane *S-S* parallel to *XY* and project the true shape of a section by usual method.

Note : *Try the above problem with maximum base and minimum height condition.*

Scanned by CamScanner

Problem 28

A cone of base diameter 40 mm, axis height 50 mm is cut by horizontal section plane which is at a distance of 20 mm from apex. Draw the projection of the cone.

Solution

Refer figure 11.37 (a) and (b).

1. Draw the T.V. of a cone as a circle of diameter 40 mm.
2. Project the F.V. of a cone as a triangle with axis height 50 mm.
3. Draw the horizontal section plane *S-S*, 20 mm below the apex parallel to *XY*.
4. Draw a projector through the generator which is cut and draw the sectional T.V. as shown.

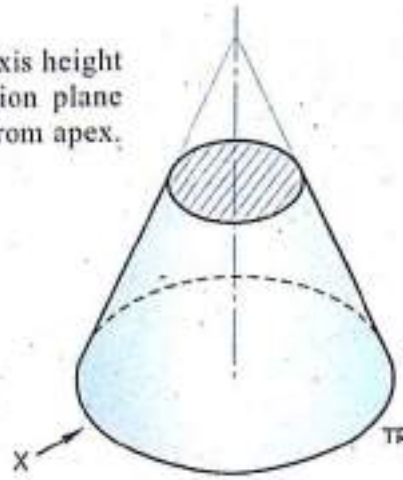

FIG. 11.37 (a)

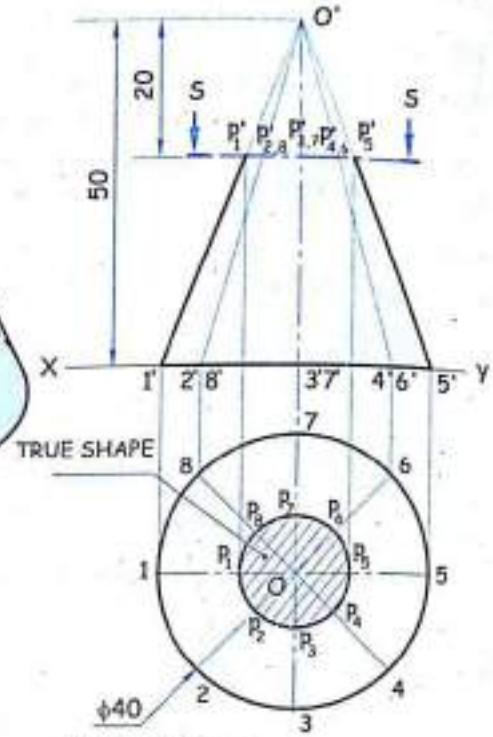

FIG. 11.37 (b)

General Practice to Name the Points

(i) Name the eight parts of the circle as *1, 2, . . . 8* in the T.V.

(ii) Name the generators of the F.V. as *O'-1', O'-2', . . . 0'-8'* respectively.

(iii) Name the point of intersection (common point) of the cutting plane and generators as p_1', p_2', . . . p_8' respectively. (Generators *O'-1'* will carry p_1', *O'-2'* will carry p_2', and so on.)

Problem 29

A vertical cone base 40 mm diameter and axis height 50 mm is cut by a vertical section plane, H.T. of which is parallel to the V.P. and 10 mm away from the axis of a cone. Draw the T.V., sectional F.V. and true shape of the section.

Solution

Refer figure 11.38 (a) and (b).

1. Draw the T.V. of a cone as a circle of diameter 40 mm.
2. Project the F.V. with axis height 50 mm as a triangle.
3. Draw the vertical section plane *S-S* (H.T.) parallel to *XY* line and 10 mm away from the axis.

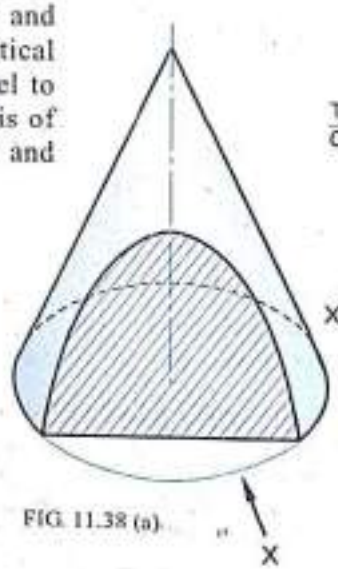

FIG. 11.38 (a)

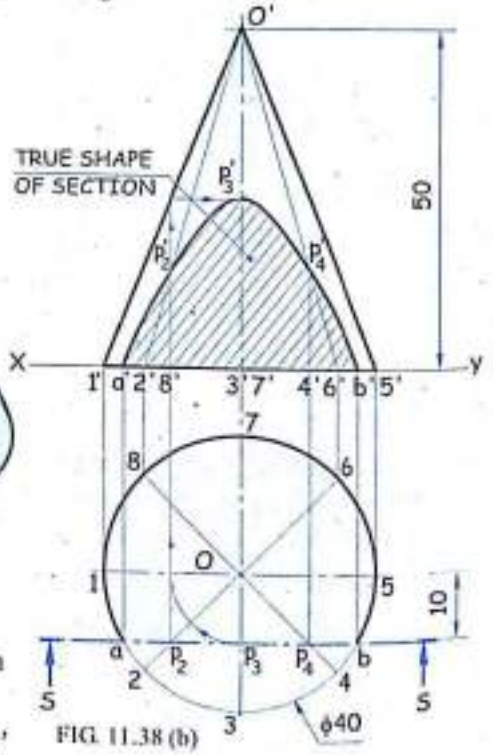

FIG. 11.38 (b)

4. Mark *a* and *b* on the base circle and mark p_2, p_3, p_4 on respective generators in the T.V. as shown.
5. Project the points vertically up and mark a', p_2', p_3', p_4', b' in the F.V.
6. Join a', p_2', p_3', p_4', b' by a smooth curve and draw the section lines as shown to get the sectional F.V., which also represents the true shape of a section.

Scanned by CamScanner

Problem 30 (a)

A right circular cone of base diameter 40 mm, axis height 50 mm has its base in the H.P. It is cut by auxiliary inclined plane which makes an angle 45° to the H.P. and passes through the point on the axis 20 mm below the apex. Draw the sectional T.V., sectional S.V., F.V. and the true shape of a section. *(Use first angle method.)*

Solution (a)

Refer figure 11.39 (a) and (b).

1. Draw the T.V. of a cone as a circle of diameter 40 mm. and project the F.V. and the S.V.
2. Draw the section plane *S-S* at an angle 45° to *XY* and passing through the point on axis 20 mm below apex.
3. Mark $p_1', p_2', p_3', p_4', p_5', p_6', p_7', p_8'$ in the F.V. on the respective generators.
4. Project these points vertically down to mark $p_1, p_2, p_3, p_4, p_5, p_6, p_7, p_8$ respectively on the corresponding generators in the T.V. p_3' and p_7' are initially transferred by horizontal projector to end generator (i.e. $O'1'$) and then projected vertically down and with O as the centre it is rotated as shown to mark p_3 and p_7.
5. Join $p_1, p_2, p_3, p_4, p_5, p_6, p_7, p_8$ by a smooth curve to get the sectional T.V.

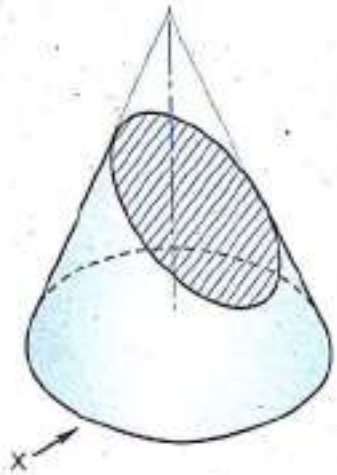

FIG. 11.39 (a)

6. Project $p_1', p_2', p_3', \ldots, p_8'$ horizontally to mark $p_1'', p_2'', p_3'', \ldots, p_8''$ respectively on the corresponding generator in the S.V.
7. Join $p_1'', p_2'', p_3'', \ldots, p_8''$ by a smooth curve, which gives the sectional S.V.
8. Construction of True Shape of the Section.
   (i) Draw the projectors through $p_1', p_2', p_3', \ldots, p_8'$ perpendicular to section plane *S-S* from the F.V. as shown in *figure 11.39 (b)*.
   (ii) Draw *X'Y'* perpendicular to the drawn projectors.

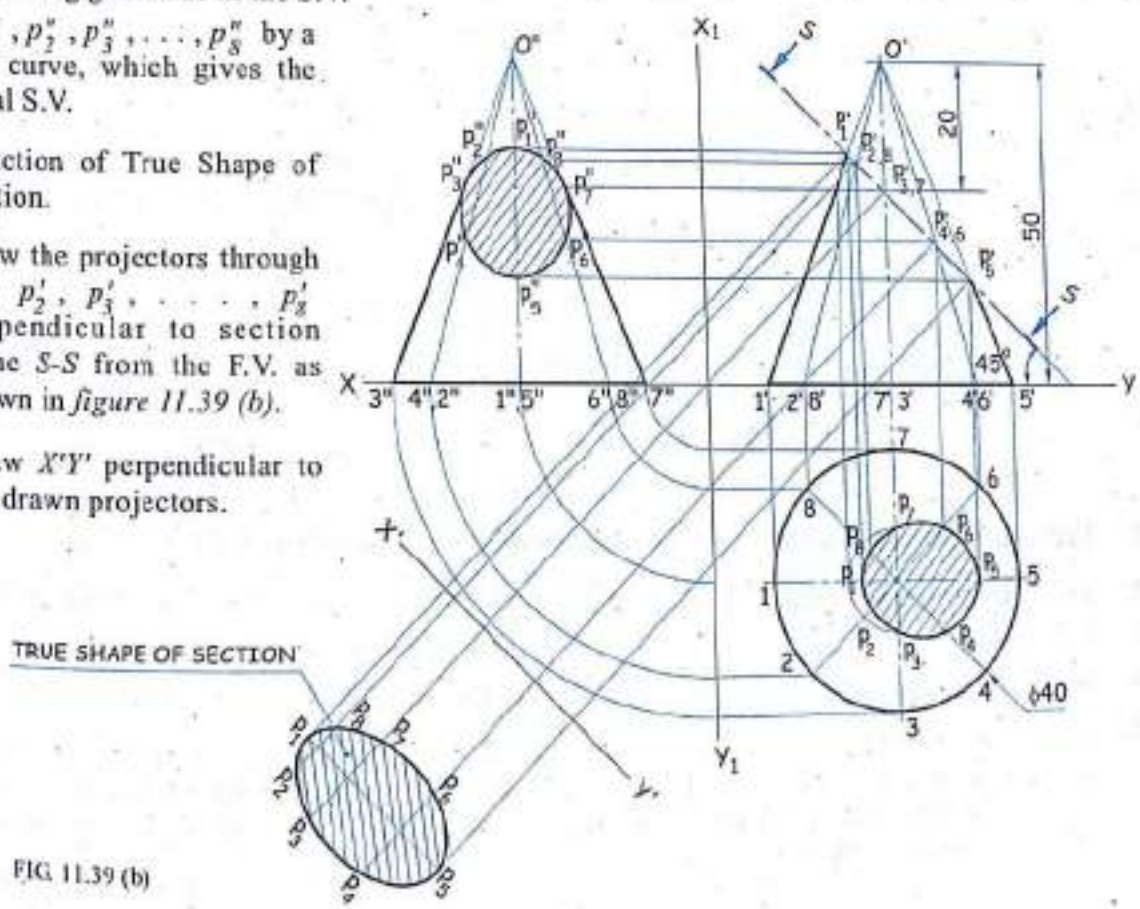

FIG. 11.39 (b)

Scanned by CamScanner

(iii) Transfer the distances of points $p_1, p_2, p_3, \ldots, p_8$ of the T.V. from the XY line to the new reference line $X'Y'$ on the respective projectors and mark $p_1, p_2, p_3, \ldots, p_8$ respectively as shown.

(iv) Join $p_1, p_2, p_3, \ldots, p_8$ by a smooth curve, which is the true shape of a section.

Problem 30 (b)

A right circular cone of base diameter 40 mm, axis height 50 mm has its base on the ground. It is cut by auxiliary inclined plane which makes an angle 45° to the ground and passes through the point on the axis 20 mm below the apex. Draw the sectional T.V., sectional S.V., F.V. and the true shape of a section. *(Use third angle method.)*

Solution (b). *Refer figure 11.39 (c).*

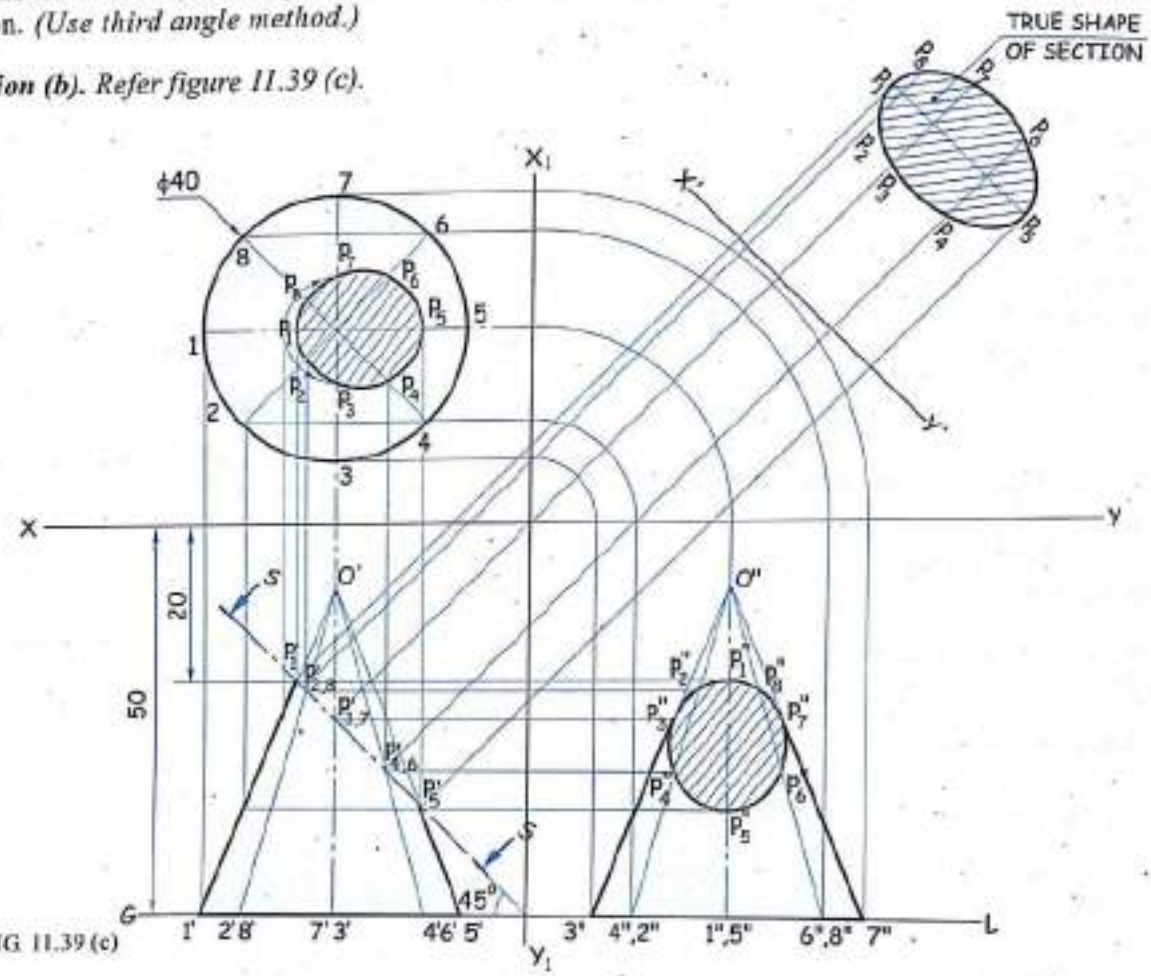

FIG. 11.39 (c)

1. Draw the T.V. of a cone as a circle of diameter 40 mm. and project the F.V. and the S.V.
2. Draw the section plane S-S at an angle 45° to GL and passing through the point on axis 20 mm below apex.
3. Mark $p_1', p_2', p_3', p_4', p_5', p_6', p_7', p_8'$ in the F.V. the on respective generators.
4. Project these points vertically down to mark $p_1, p_2, p_3, p_4, p_5, p_6, p_7, p_8$ respectively on the corresponding generators in the T.V. (p_3' and p_7' are initially transferred by horizontal projector to end generator (i.e. $O'1'$) and then projected vertically down and with O as the centre it is rotated as shown to mark p_3 and p_7.)

Scanned by CamScanner

5. Join $p_1, p_2, p_3, p_4, p_5, p_6, p_7, p_8$ by a smooth curve to get the sectional T.V.
6. Project $p_1', p_2', p_3', \ldots, p_8'$ horizontally to mark $p_1'', p_2'', p_3'', \ldots, p_8''$ respectively on the corresponding generator in the S.V.
7. Join $p_1'', p_2'', p_3'', \ldots, p_8''$ by a smooth curve, which gives the sectional S.V.
8. Construction of true shape of section as given in step 8 of solution 31 (a).

Problem 30 (c)

A right circular cone of base diameter 40 mm, axis height 50 mm has its base in the H.P. It is cut by auxiliary inclined plane which makes an angle 45° to the H.P and passes through the point on the axis 20 mm below the apex. Draw the sectional T.V., sectional S.V., F.V. and the true shape of a section. (Draw the true shape of section by placing the section plane *S-S* parallel to reference line.)

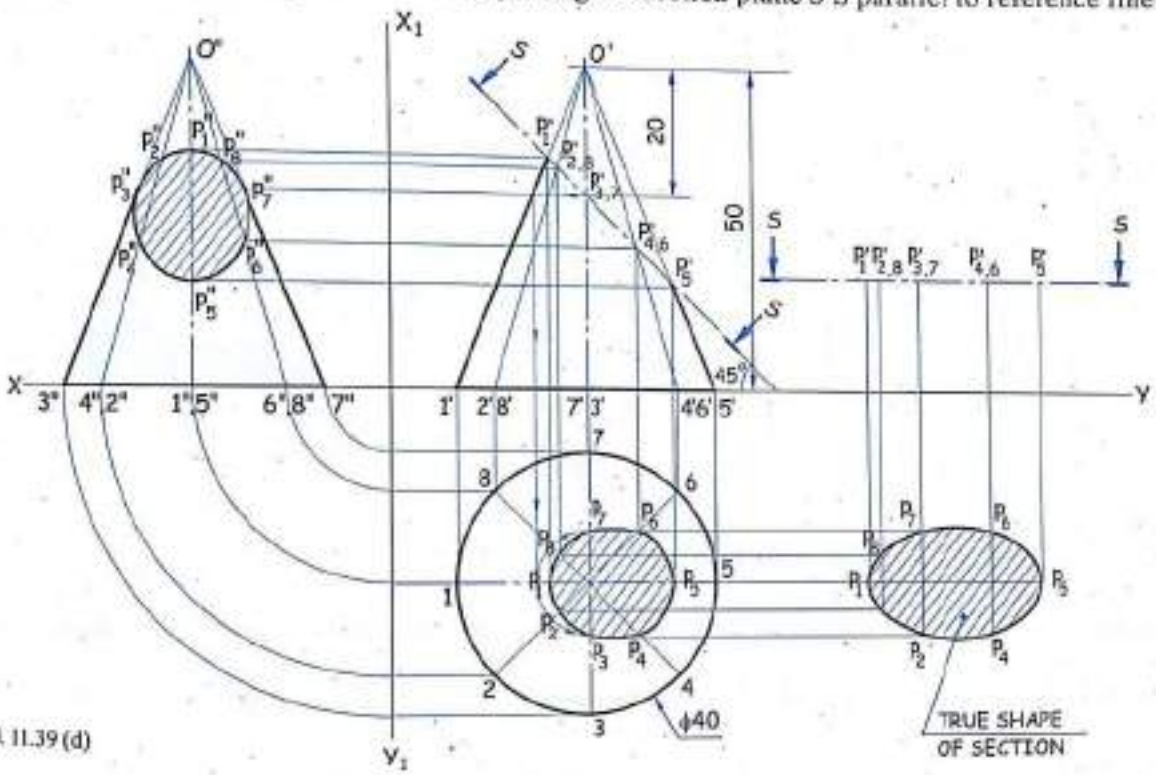

FIG. 11.39 (d)

Solution (c). Refer figure 11.39 (d)

Follow steps 1 to 7 from solution 30 (a).

8. Construction of the True Shape of Section.
   (i) Place the section plane *S-S* with points $p_1', p_2', p_3', \ldots, p_8'$ parallel to the *XY* line as shown *in figure 11.39 (d).*
   (ii) Draw the projectors through points $p_1', p_2', p_3', \ldots, p_8'$ vertically down.
   (iii) Draw the horizontal projectors through the points $p_1, p_2, p_3, \ldots, p_8$ from the T.V.
   (iv) Mark p_1, which is an intersection of a vertical projector through p_1' and a horizontal projector through p_1 (T.V.).
   (v) Similarly, mark $p_2, p_3, \ldots, p_8$ as shown.
   (vi) Join $p_1, p_2, p_3, \ldots, p_8$ by a smooth curve, which is the true shape of a section.

Scanned by CamScanner

Problem 31

A cone, of base 70 mm diameter and axis 90 mm long is resting on its base on H.P. It is cut by a section plane perpendicular to V.P. and parellel to and 15 mm away from one of its end generators. Draw the Sectional T.V., F.V., Sectional S.V. and the true shape of a section. ***(Nov '84, Dec. '11, M.U.)***

Solution

Refer figure 11.40 (a) and (b).

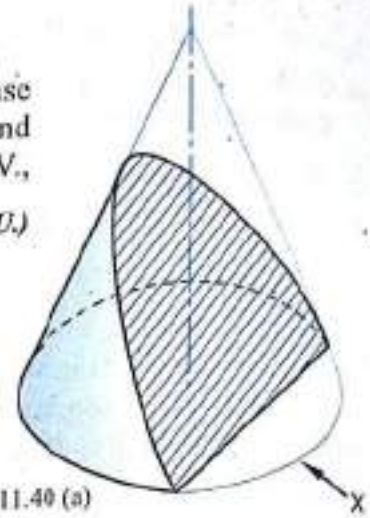

FIG. 11.40 (a)

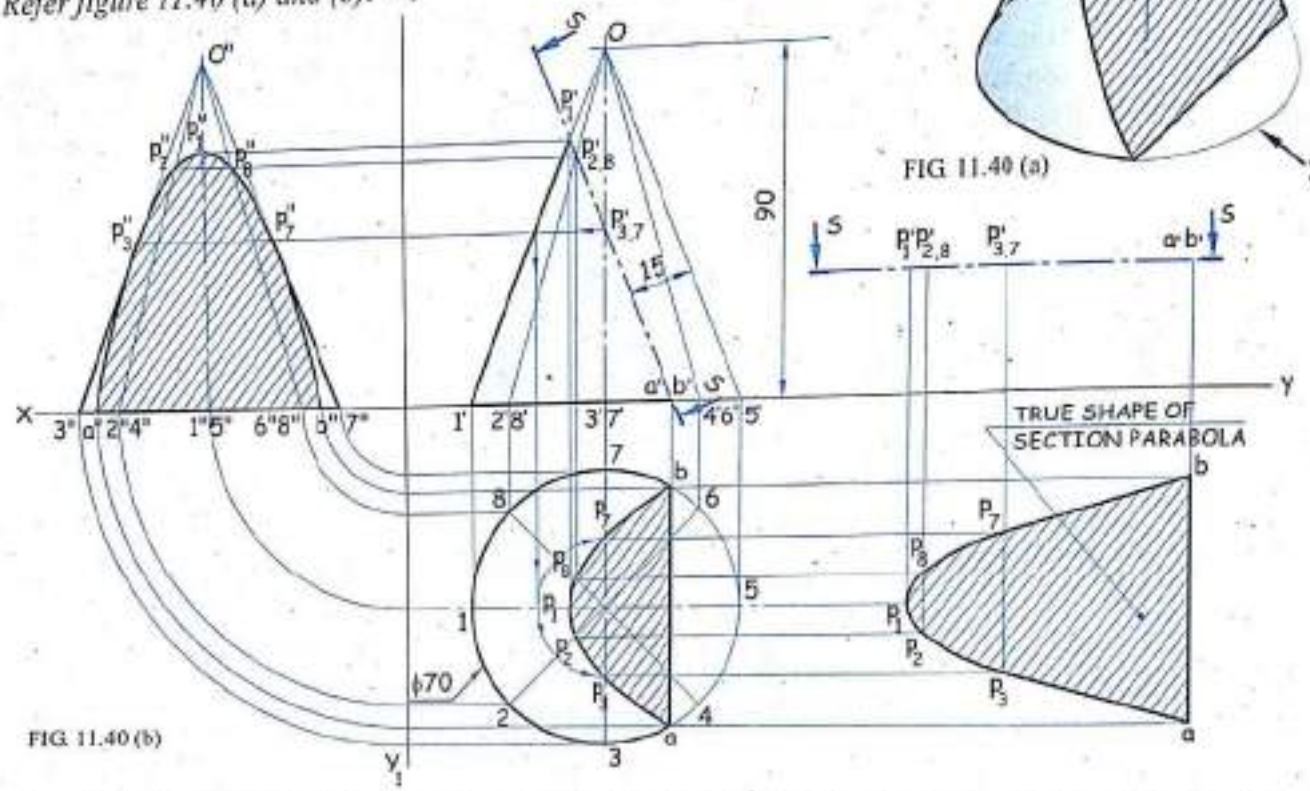

FIG. 11.40 (b)

1. Draw the T.V. of a cone as a circle of diameter 70 mm and then project the F.V. and the S.V. with axis height 90 mm.
2. Draw the section plane *S-S* parallel to the generator *O'-5'* at 15 mm distance.
3. Assuming the apex part to be removed, draw the sectional views.
4. Mark the points p_1', p_2', p_8', p_3', p_7' on the section plane where respective generators are cut, also mark *a'* and *b'* on the base of a cone.
5. Draw the projectors through p_1', p_2', p_8', p_3', p_7' vertically down and mark the points p_1, p_2, p_8, p_3, p_7 on respective generator. Also mark *a* and *b* on the base circle in the T.V.
6. Join *a*, p_3, p_2, p_1, p_8, p_7, *b* by a smooth curve and *a-b* by a straight line, which represents the sectional T.V.
7. Project horizontally the points p_1, p_2, p_8, p_3, p_7 from the F.V. to the S.V. and mark p_1'', p_2'', p_8'', p_3'', p_7'' on the respective generators. Draw the projector through *a* and *b* (T.V.) and mark *a"* and *b"* (S.V.) as shown.
8. Join a'', p_3'', p_2'', p_1'', p_8'', p_7'', b'' by a smooth curve to get the sectional S.V.
9. Place the section plane *S-S* (p_1', p_2', p_8', p_3', p_7', *a'*, *b'*) parallel to the *XY* line.
10. Project the true shape of a section as shown which is a parabola.

Scanned by CamScanner

Problem 32

A cone, base diameter 40 mm and height 50 mm is resting on its base on the H.P. It is cut by a plane inclined to the H.P. and perpendicular to the V.P. such that the true shape of a section is an isosceles triangle of base 30 mm. Draw the F.V., sectional S.V., sectional T.V. Measure the inclination of a cutting plane with the H.P.

(Dec. '07, M.U.)

Solution

Refer figure 11.41 (b).

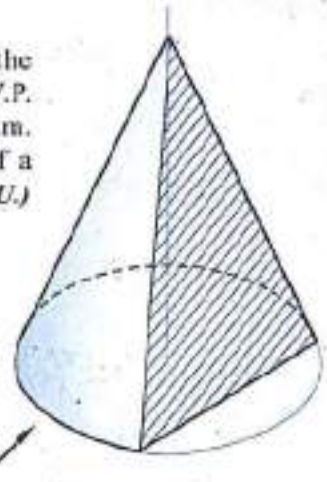

FIG. 11.41 (a)

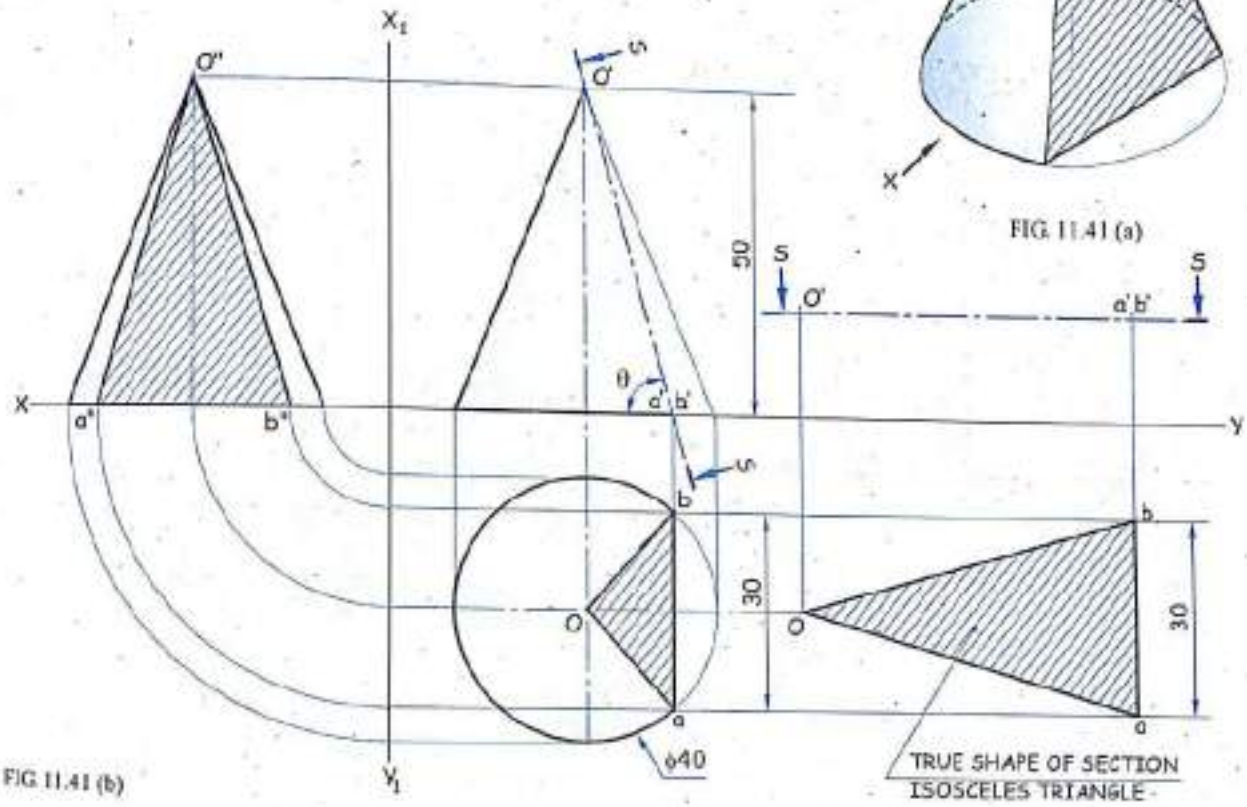

FIG. 11.41 (b)

1. Draw the T.V. of a cone as a circle of diameter 40 mm.
2. Project the F.V. and the S.V. with axis height 50 mm.
3. Set a line perpendicular to XY on the base circle such that $ab = 30$ mm.
4. Join O to a and b. Draw the sectional T.V. as shown.
5. Project ab from the T.V. and mark $a'b'$ in the F.V. on the base line.
6. Draw the section plane S-S by joining apex O to a',b' the which is the required position of the section plane. Measure its inclination θ with XY, which will give the inclination of section plane with the H.P.
7. Projecting a and b from the T.V. mark a'' and b'' in the S.V. as shown.
8. Join O'' to a'' and b'', which represents the sectional side view.
9. Place the section plane S-S (O'-$a'b'$) parallel to XY.
10. Project the true shape of a section as an isosceles triangle with the required base 30 mm.

Scanned by CamScanner

Problem 33

A semicone of diameter 80 mm and 90 mm axis length is resting on its semicircular base on the H.P. such that the triangular face of a semicone is parallel to the V.P. and away from the observer. It is cut by a section plane perpendicular to the V.P. and inclined at 45° to the H.P. passing through the mid-point of an axis. Draw the sectional plan, elevation and the true shape of a section. Also add the right hand side view, which gives the sectional details on it. *(June '95, M.U.)*

Solution

Refer figure 11.42.

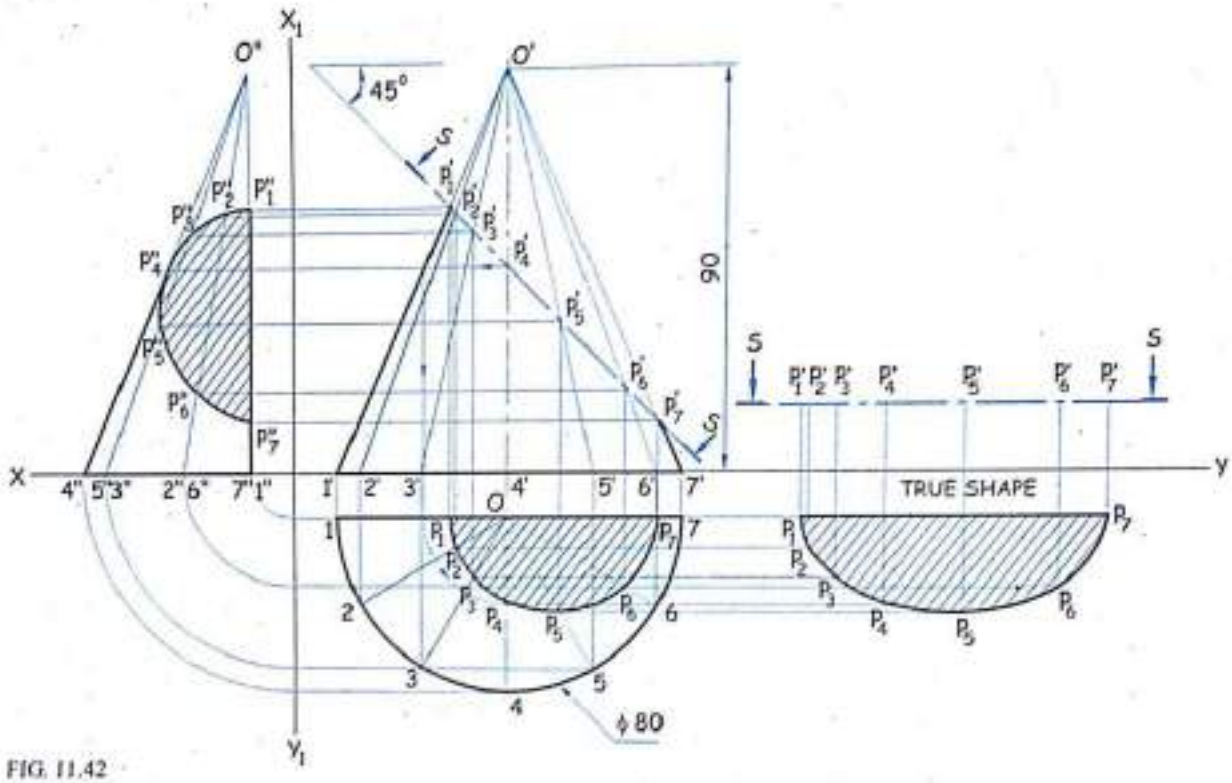

FIG. 11.42

1. Draw the T.V. of a semicone as a semicircle with diameter 80 mm. such that the diameter of asemicone is parallel and nearer to the *XY* line. (i.e. triangular face of a semicone is parallel and nearer to the V.P.)and then project the F.V. with the axis length 90 mm.
2. Draw the section plane *S-S* inclined at 45° to the *XY* line and passing through the mid-point of an axis in the F.V.
3. Mark the points p_1', p_2', . . . p_7' where the section plane *S-S* cuts the respective generator in the F.V.
4. Join these points in a proper sequence by the smooth curve and draw the sectional F.V.
5. Project the points p_1', p_2', . . . p_7' horizontally and mark p_1'', p_2'', . . . p_7'' on the respective generator in the S.V.
6. Join these points in a proper sequence by the smooth curve and draw the sectional S.V.
7. Place the section plane *S-S* parallel to the *XY* line and project the true shape of the section by usual method.

Scanned by CamScanner

Problem 34

A cone of 70 mm diameter and 90 mm axis length is lying on one of its generators in the V.P. with the axis parallel to the H.P. It is cut by a section plane inclined at an angle of 30° to the V.P. and perpendicular to the H.P. and passes at a distance of 30 mm above the base along the axis, so that the apex is retained. Draw the T.V., sectional F.V. and true shape of the section.

Solution

Refer figure 11.43.

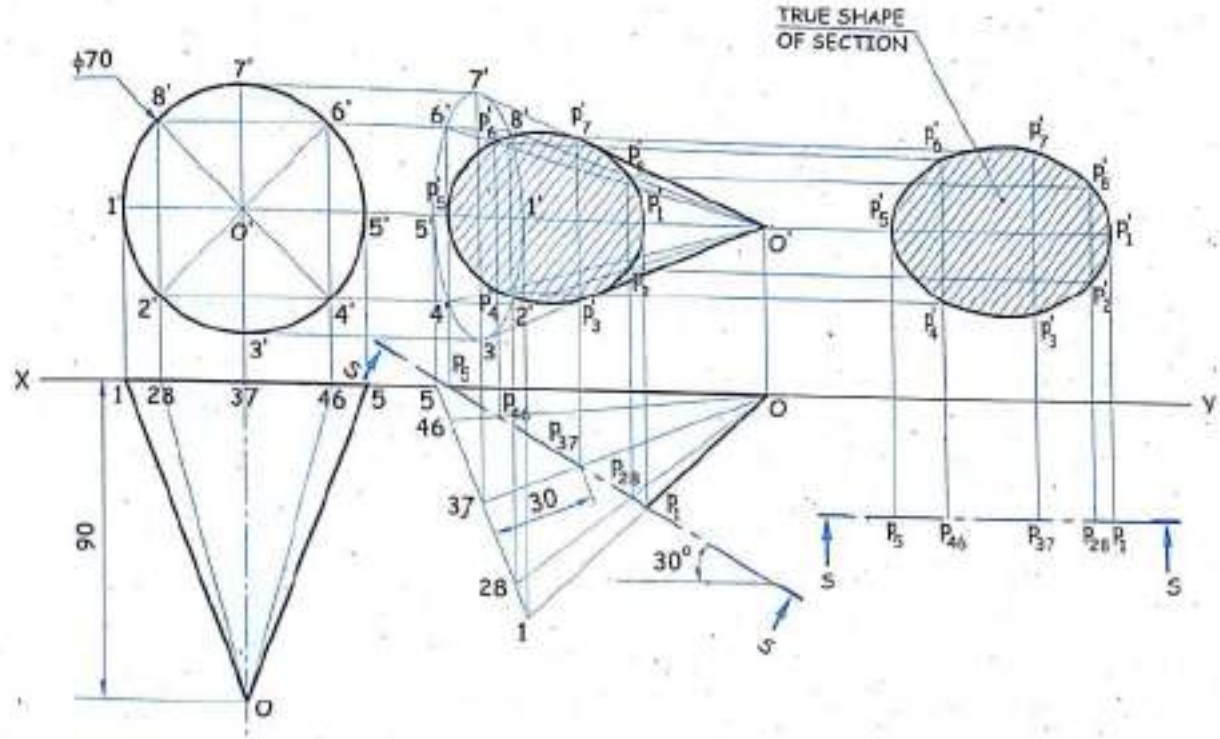

FIG. 11.43

1. Draw the F.V. of a cone as the circle of diameter 70 mm and then project the T.V. with an axis height of 90 mm.
2. Tilt the cone in the second stage, so that its generator rests in the V.P., say generator *O-5* is lying on the *XY* line and then project the F.V. with *care of visibility.*
3. Draw the section plane *S-S* inclined to the *XY* line at 30° and passing through the point on the axis 30 mm away from the base.
4. Mark the points $p_1, p_2, \ldots p_8$ where the section plane *S-S* cuts the respective generators.
5. Project these points vertically up and mark $p_1', p_2', \ldots p_8'$ on the respective generators and then join these points in a sequence by the smooth curve to draw the sectional F.V.
6. Redraw the section plane *S-S* parallel to the *XY* line.
7. Project the true shape of a section by usual method.

Scanned by CamScanner

Problem 35

A cone, base 50 mm diameter and axis 50 mm has its axis parallel to the V.P. and inclined at 45° to the H.P. The horizontal section plane cuts the cone through the mid-point of the axis and removes the portion containing the apex of a cone. Draw the elevation sectional plane.

Solution

Refer figure 11.44.

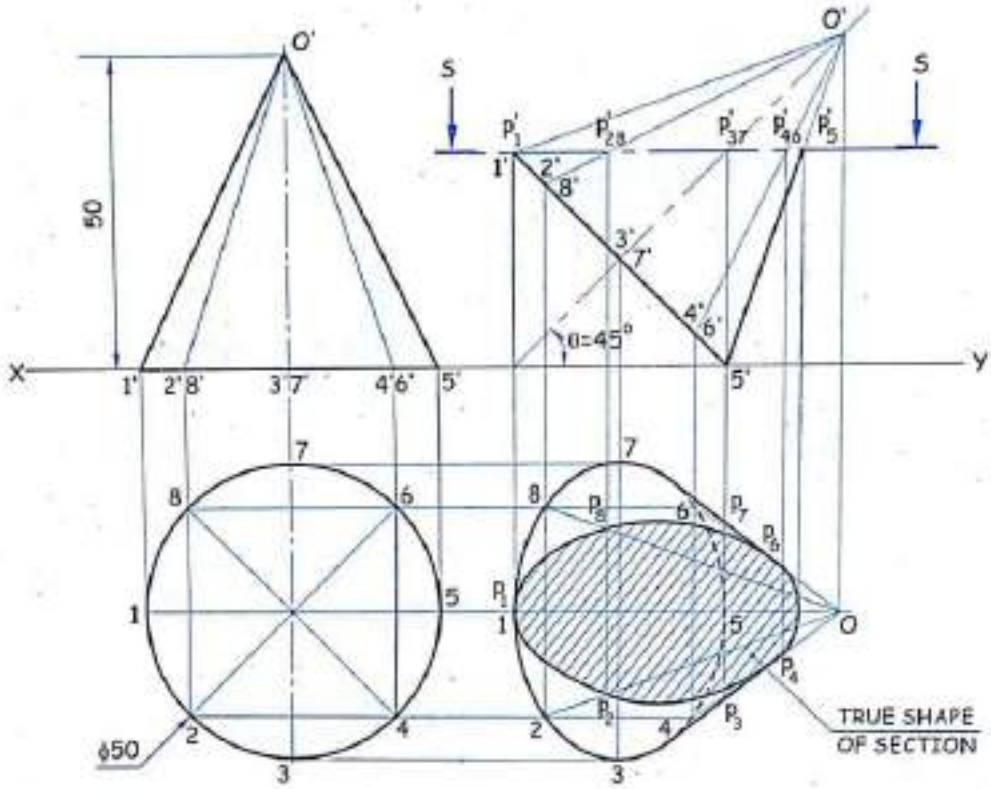

FIG. 11.44

1. Draw the T.V. of a cone as the circle with base diameter 50 mm and then project the F.V. with an axis height of 50 mm.
2. Redraw the 1st stage of the F.V. with an axis inclined at 45° to the XY ($\theta = 45°$) with a point S' on the XY line and project the T.V. with *care of visibility.*
3. Draw the horizontal cutting plane S-S parallel to the XY line and bisecting the axis cone.
4. Mark the points p_1', p_2', . . . p_8' where the cutting plane S-S cuts the respective generators.
5. Project these points vertically down and mark the points p_1, p_2, . . . p_8 on the respective generators.
6. Join these points in a proper sequence by the smooth curve and draw the sectional T.V. The section drawn in the T.V. also represents the true shape of a section.

Scanned by CamScanner

Problem 36

A cone, base diameter 45 mm and axis 75 mm long is lying on the H.P. on one of its generator with an axis parallel to the V.P. It is cut by the section plane parallel to the H.P. and perpendicular to the V.P., which bisects its axis. Draw the sectional T.V. and F.V.

Solution

Refer figure 11.45.

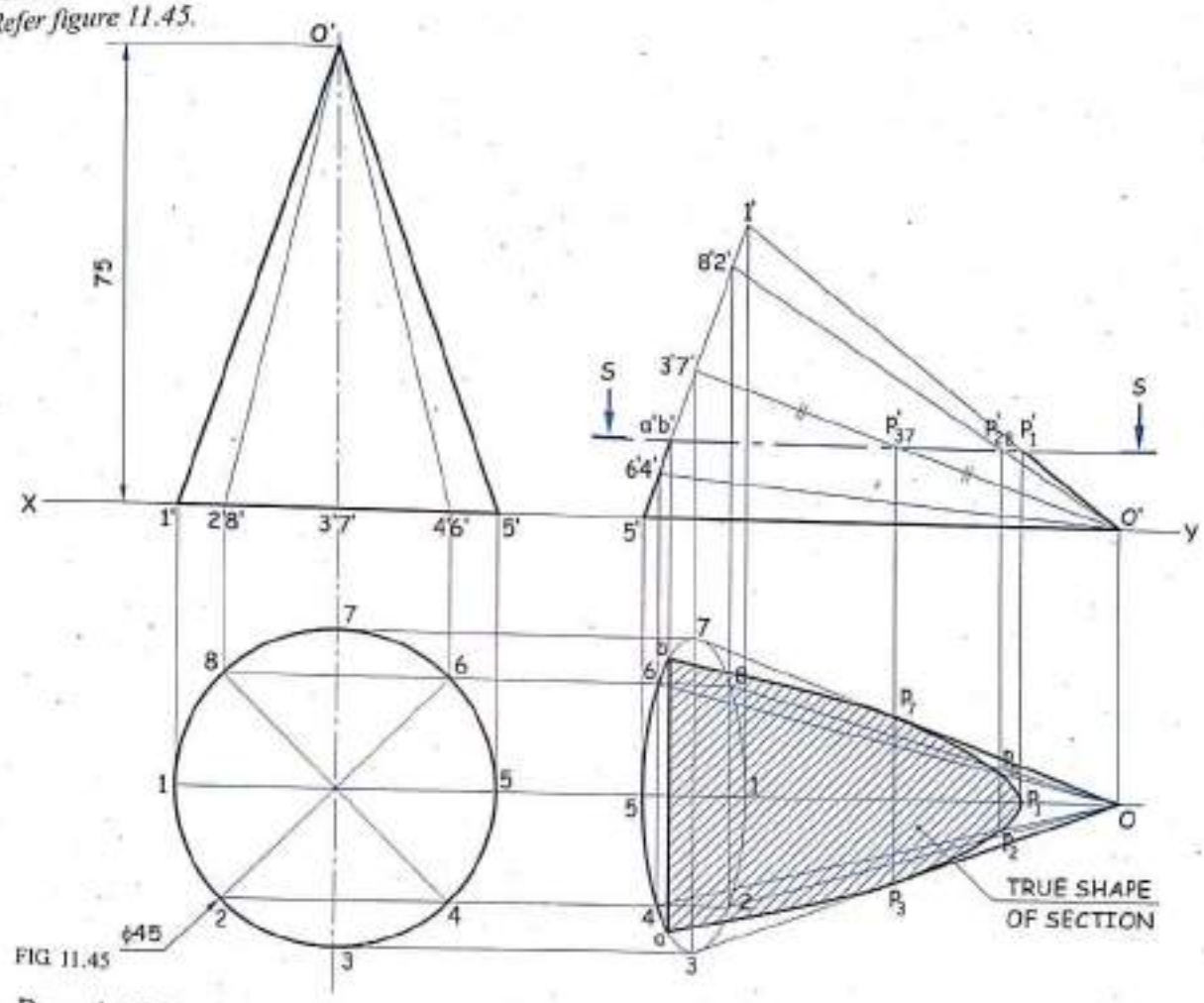

FIG. 11.45

1. Draw the T.V. of a cone as the circle of diameter 45 mm and project the F.V. with an axis height of 75 mm.
2. Redraw the Ist stage of the F.V. such that the generator *O-5* lies on the *XY* line (generator on the H.P.) and project the T.V. with *care of visibility.*
3. Draw the section plane *S-S* parallel to the *XY* line passing through the mid-point of an axis in the F.V.
4. Mark the points p_1', p_2', p_8', p_3', p_7' where the section plane *S-S* cuts the respective generator. Also mark a' and b' where the section plane *S-S* cuts the base of a cone.
5. Project these points vertically down on the respective generators and mark the points p_1, p_2, p_8, p_3, p_7 and also also mark *a*,*b* on the base in the T.V.
6. Join *a*, p_3, p_2, p_1, p_5, p_7, *b* by the smooth curve and join *a*,*b* by a straight line and draw the sectional T.V.
7. Since the section plane *S-S* is parallel to the H.P., we get the true shape of a section in the T.V.

Scanned by CamScanner

Problem 37

A cone, base diameter 60 mm and axis 70 mm long is resting on its base on the ground (H.P.). It is cut by a vertical section plane, the H.T. of which makes an angle of 60° with the reference line and is 8 mm away from the T.V. of an axis. Draw the T.V., sectional F.V., sectional S.V. and the true shape of a section. ***(Dec. '98, M.U.)***

Solution

Refer figure 11.46.

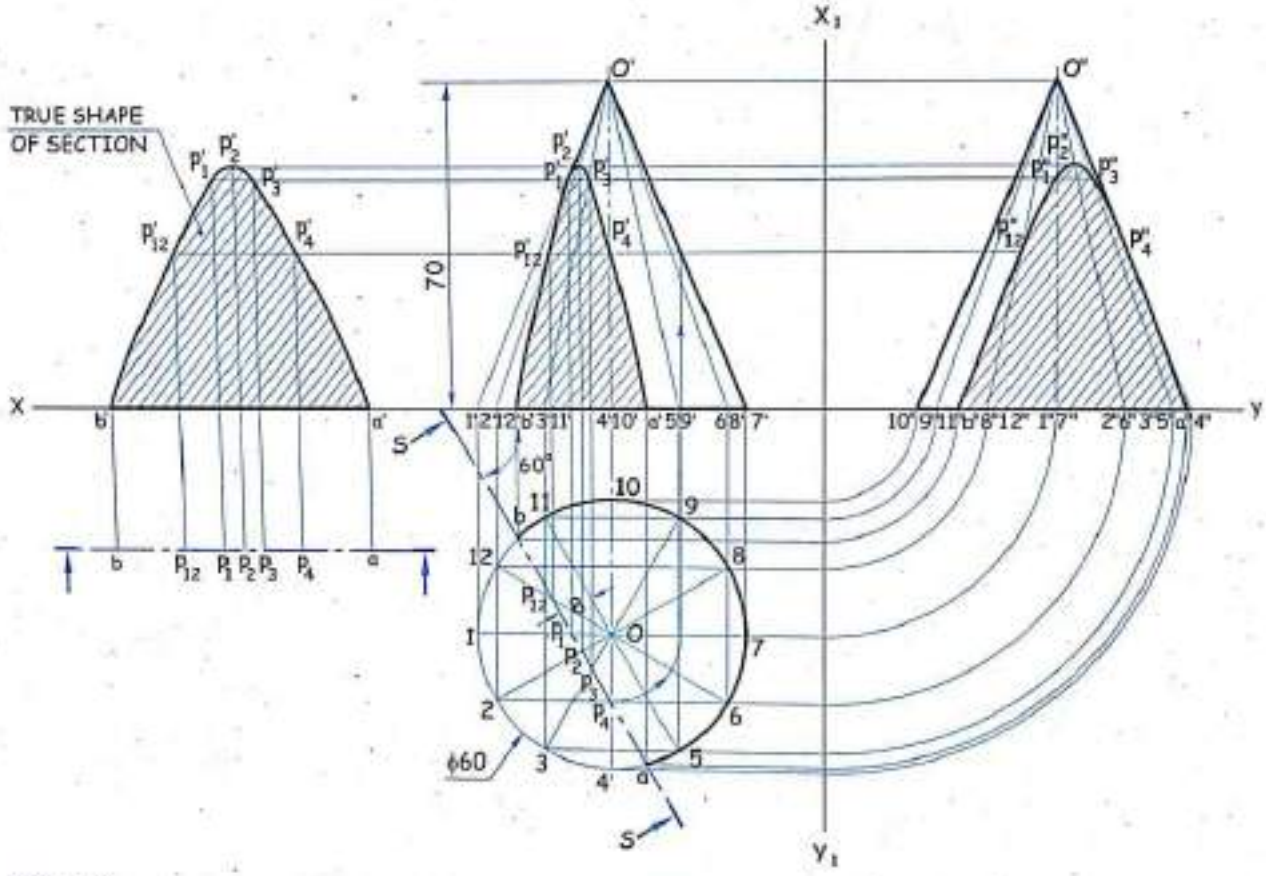

FIG. 11.46

1. Draw the T.V. and project the F.V. and the S.V.
2. Draw the section plane *S-S*, make an angle 60° to the *XY* and 8 mm away from the axis in the T.V.
3. Mark the points where the section plane *S-S* cuts the generators and the base as shown.
4. Project these points vertically up and mark its corresponding F.V. By joining these points, draw the sectional F.V.
5. From the F.V., project the points horizontally and mark its corresponding S.V. By joining these points, draw the sectional S.V.
6. Redraw the section plane *S-S* parallel to the *XY* line and project the true shape of a section by usual method.

Scanned by CamScanner

Problem 38

A cone of 60 mm diameter and 75 mm axis height rests on the ground (H.P.) on one of its generators so that the axis is parallel to the V.P. It is cut by the section plane perpendicular to the H.P., inclined at 30° to the V.P. and bisecting the axis. Draw the sectional F.V., T.V. and the true shape of a section.

(May '99, M.U.)

Solution

Refer figure 11.47.

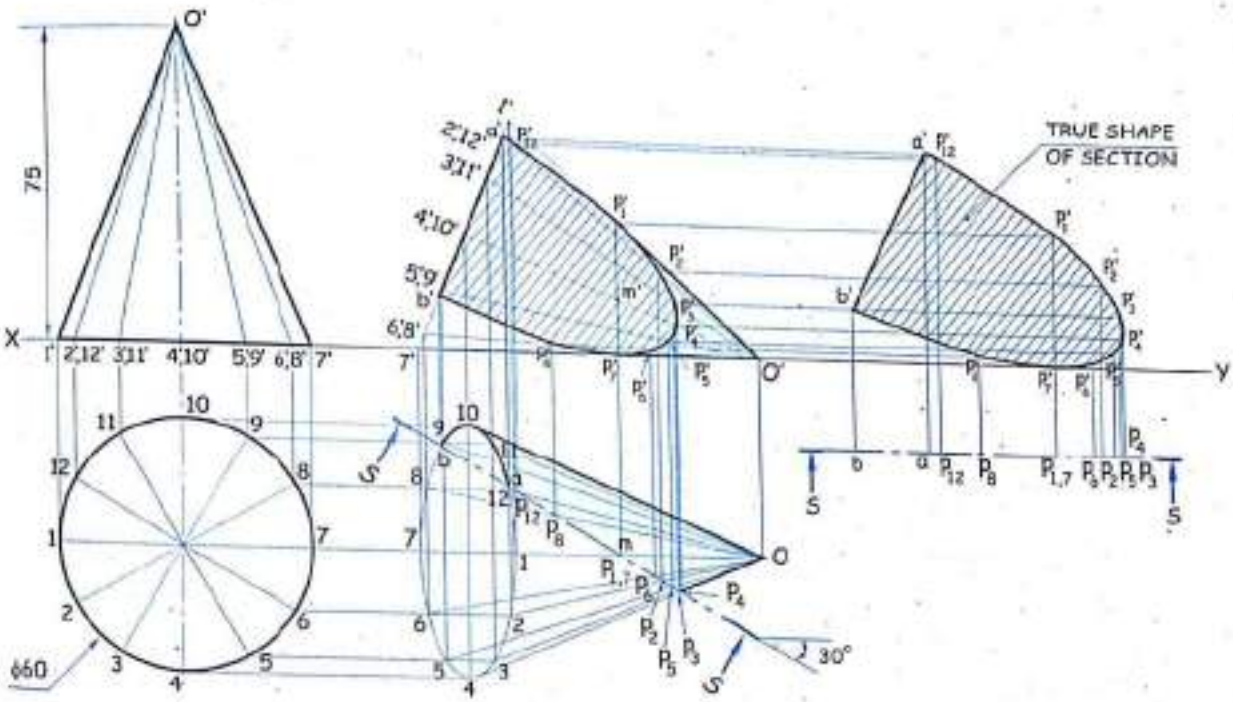

FIG. 11.47

1. Draw the T.V. and project the F.V.
2. Redraw the F.V. of Ist stage such that the generator *O'-7'* lies on the *XY* line (a generator on the H.P.).
3. Draw the section plane *S-S* inclined at 30° to the *XY* passing through the mid-point of an axis in the T.V.
4. Mark the points where the section plane *S-S* cuts the generators and the base as shown.
5. Project these points vertically up and mark its corresponding front view.
6. Join these points in a proper sequence and draw the sectional F.V.
7. Redraw the section plane *S-S* parallel to the *XY* line and project the true shape of a section by usual method.

Scanned by CamScanner

Problem 39

A cylinder 30 mm diameter and 50 mm long stands with its circular base in the H.P. The horizontal section plane cuts the cylinder into two equal halves. Draw the F.V. and sectional T.V.

Solution

Refer figure 11.48 (a) and (b).

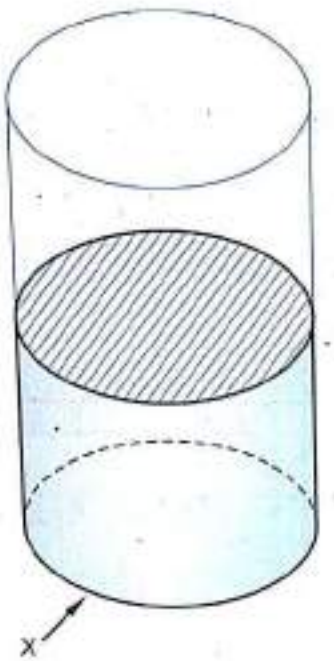

FIG. 11.48 (a)

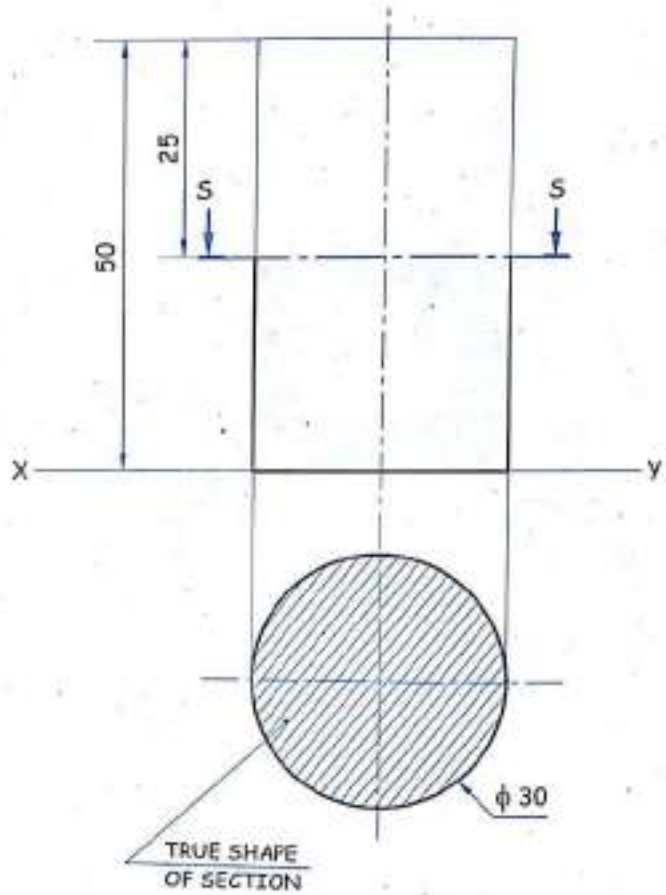

FIG. 11.48 (b)

1. Draw the T.V. of a cylinder as the circle of given diameter 30 mm.
2. Project the F.V. as a rectangle with the axis height 50 mm.
3. Draw the horizontal section plane *S-S* as shown.
4. Draw the section line in complete circle, which is the sectional T.V. and it also represents the true shape of a section.

Scanned by CamScanner

Problem 40 (a)

A cylinder, 30 mm diameter and 50 mm long stands vertically on its circular base. It is cut by an A.I.P. inclined at 45° to the H.P. which bisects a axis of a cylinder. Draw the sectional T.V., F.V., sectional S.V. and the true shape of a section. *(Use first angle method.)*

Solution (a)

Refer figure 11.49 (a) and (b).

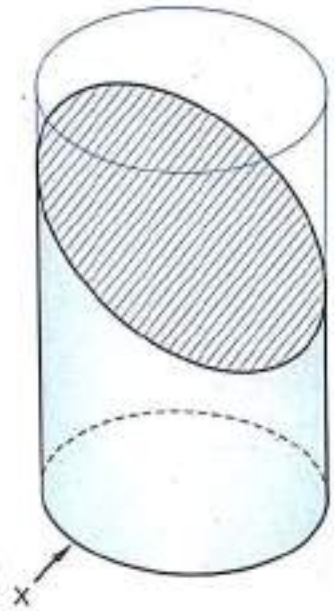

FIG. 11.49 (a)

1. Draw the T.V. of a cylinder as the circle with diameter 30 mm.
2. Project the F.V. and the S.V. with the axis height 50 mm.
3. Draw the section plane *S-S* at 45° to the *XY* line and passing through the mid-point of an axis of a cylinder. Assume the upper part to be removed.
4. Mark the points P'_1, P'_2, P'_8, P'_3, P'_7, P'_4, P'_6, P'_5 on the section plane and the corresponding generators as shown.
5. The complete T.V. is under section. Draw the section line in the T.V. circle which represents the sectional T.V.
6. Project horizontally the points P'_1, P'_2, . . . P'_8 from the F.V. to the S.V. and mark P''_1, P''_2, . . .
7. Join P''_1, P''_2, . . . P''_8 from the F.V. to the S.V. and mark P''_1, P''_2, . . . $P''6$.
8. Construction of True Shape of the Section.

   (i) Draw projectors through P'_1, P'_2, . . . P'_8 perpendicular to section plane *S-S* from the F.V. as shown in *figure 11.49 (b).*

   (ii) Draw *X'Y'* perpendicular to the drawn projectors.

   (iii) Transfer distances of the points of the T.V. from *XY* line to the new reference line *X'Y'* on respectively as shown.

   (iv) Join the points P_1, P_2, . . . P_8 by smooth curve which is the true shape of the section.

Problem 40 (b)

A cylinder, 30 mm diameter and 50 mm long stands vertically on its circular base. It is cut by an A.I.P. inclined at 45° to the ground which bisects a axis of a cylinder. Draw the sectional T.V., F.V., sectional S.V. and the true shape of a section. *(Use third angle method.)*

Scanned by CamScanner

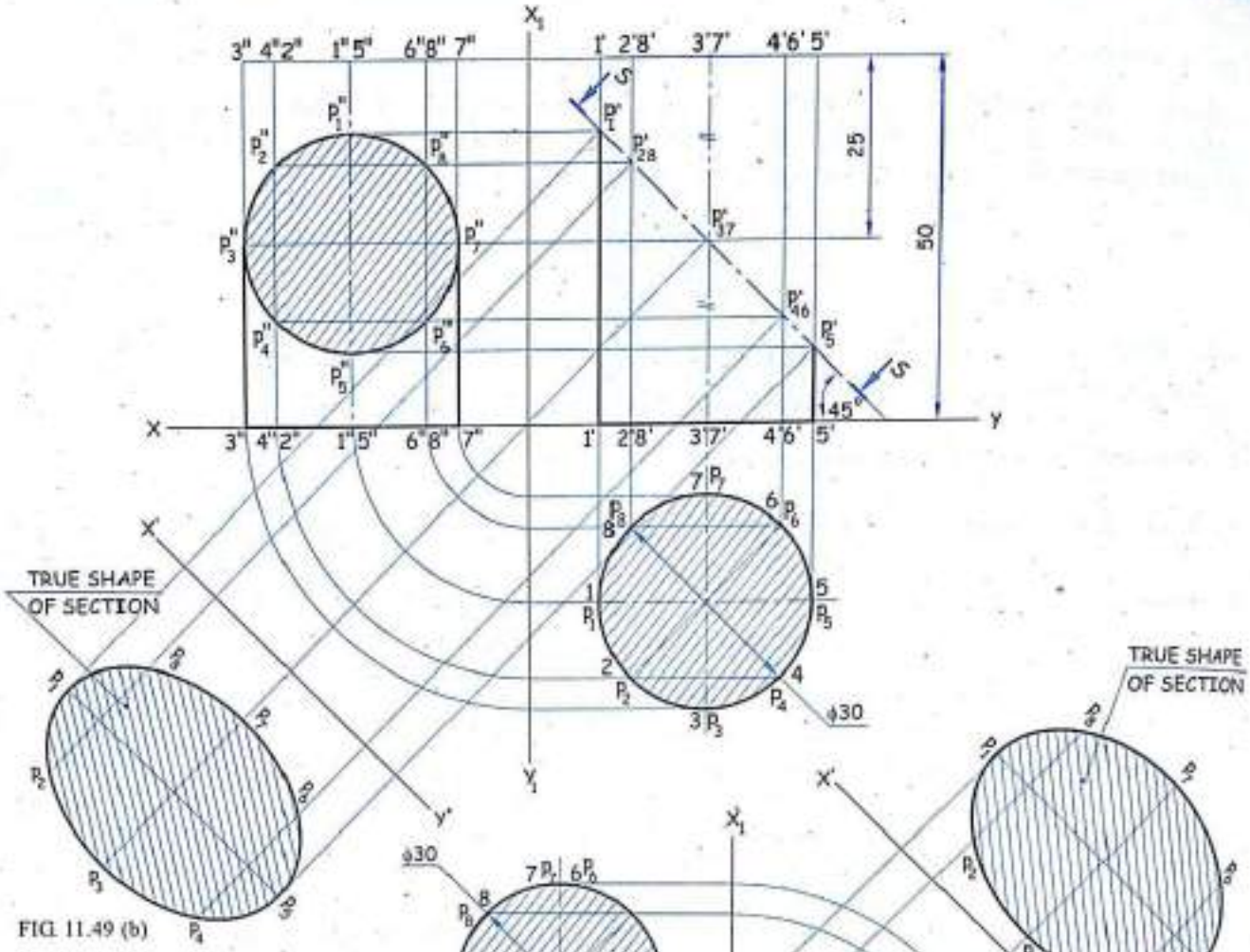

FIG. 11.49 (b)

Solution (b)

Refer figure 11.49 (c).

1. Draw the T.V. of a cylinder as the circle with diameter 30 mm.
2. Project the F.V. and the S.V. with the axis height 50 mm.
3. Draw the section plane *S-S* at 45° to the *GL* line and passing through the mid-point of an axis of a cylinder. Assume the upper part to be removed.

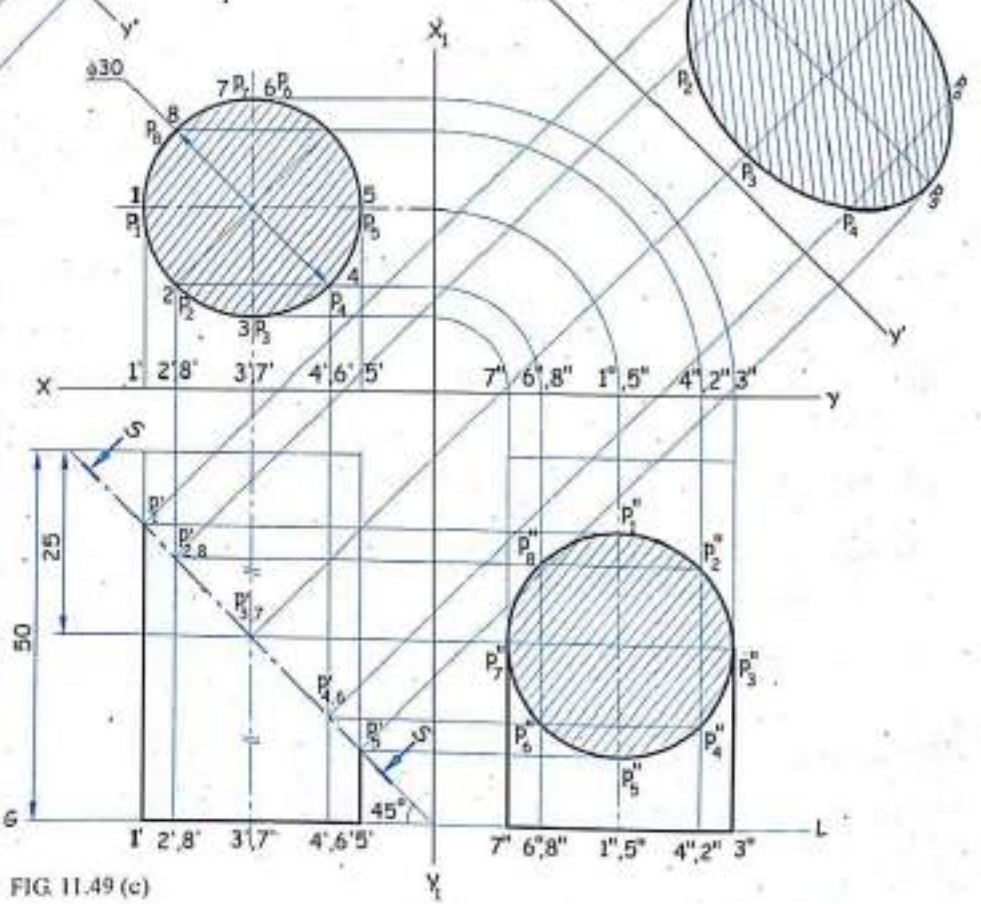

FIG. 11.49 (c)

Scanned by CamScanner

4. Mark the points P'_1, P'_2, P'_8, P'_3, P'_7, P'_4, P'_6, P'_5 on the section plane and the corresponding generators as shown.
5. The complete T.V. is under section. Draw the section line in the T.V. circle which represents the sectional T.V.
6. Project horizontally the points P'_1, P'_2, . . . P'_8 from the F.V. to the S.V. and mark P''_1, P''_2, . . .
7. Join P''_1, P''_2, . . . P''_8 from the F.V. to the S.V. and mark P''_1, P''_2, . . . $P''6$.
8. Construction of True Shape of the Section.
   - (i) Draw projectors through P'_1, P'_2, . . . P'_8 perpendicular to section plane *S-S* from the F.V. as shown in *figure 11.49 (c)*.
   - (ii) Draw $X'Y'$ perpendicular to the drawn projectors.
   - (iii) Transfer distances of the points of the T.V. from XY line to the new reference line $X'Y'$ on respectively as shown.
   - (iv) Join the points P_1, P_2, . . . P_8 by smooth curve which is the true shape of the section.

Problem 40 (c)

Same as problem 40 (a).

(Draw the true shape of section by placing the section plane *S-S* parallel to reference line.)

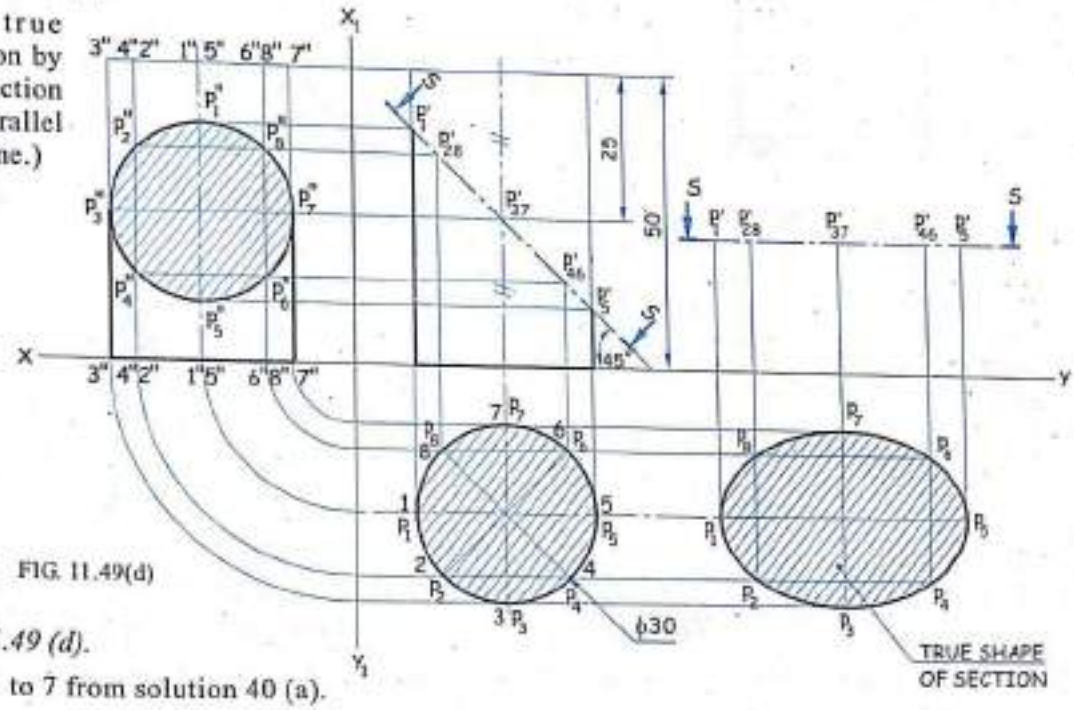

FIG. 11.49(d)

Solution (c)

Refer figure 11.49 (d).

Follow steps 1 to 7 from solution 40 (a).

8. Construction of True Shape of the Section.
   - (i) Place the section plane *S-S* with the points P'_1, P'_2, . . . P'_8 parallel to the XY line as shown in *figure 11.49 (d)*.
   - (ii) Draw the projectors through the points P'_1, P'_2, . . . P'_8 vertically down.
   - (iii) Draw the horizontal projectors through P_1, P_2, . . . P_8 from the T.V.
   - (iv) Mark P_1 which is an intersection of the vertical projector through P'_1 and the horizontal projector through P_1 (T.V.).
   - (v) Similarly, mark P_2, P_3, . . . P_8 as shown.
   - (vi) Join P_1, P_2, . . . P_8 by the smooth curve which is the true shape of a section.

Scanned by CamScanner

Problem 41

A cylinder, base 45 mm diameter, axis height 75 mm long is lying on the H.P. with the axis parallel to both the H.P. and V.P. It is cut by an auxiliary vertical plane inclined to the V.P. at 45°, which bisects its axis. Draw its sectional F.V., T.V. and the true shape of a section. *(Dec. '10, M.U.)*

Solution

Refer figure 11.50.

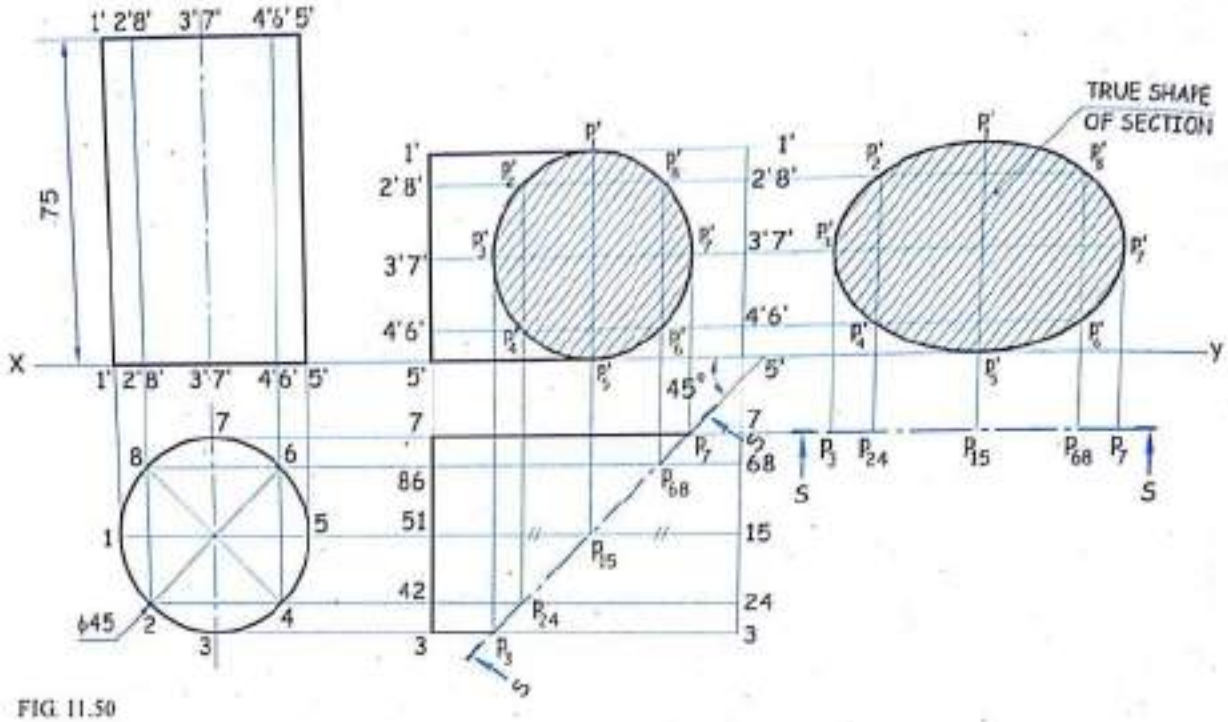

FIG. 11.50

1. Draw the T.V. and project the F.V.
2. Redraw the F.V. of 1st stage such that the generator *5'-5'* lies on the *XY* line (cylinder lying on the H.P. with an axis parallel to both H.P. and V.P., condition gets satisfied) and project the T.V.
3. Draw the section plane *S-S* inclined at 45° to *XY* such that it bisects the axis in the T.V.
4. Mark the points $p_1, p_2, \ldots p_8$ where the section plane *S-S* cuts the respective generators.
5. Project these points vertically up and mark $p_1', p_2', \ldots p_8'$ on the respective generators in the F.V.
6. Join these points in a proper sequence by the smooth curve.
7. Redraw the section plane *S-S* parallel to the *XY* line as shown.
8. Project the true shape of a section by usual method.

Scanned by CamScanner

Problem 42

A cone, diameter of base 70 mm and axis 60 mm long is resting on its base on the ground. It is cut by a section plane perpendicular to V.P. and inclined to H.P. such that the true shape of the section is an isosceles triangle of height 65 mm. Draw the front view, sectional top view, sectional side view and true shape of the section. Also measure the base of the triangle and angle made by the cutting plane to H.P. *(Dec. '99, M.U.)*

Solution

Refer figure 11.51.

It is self explanatory.

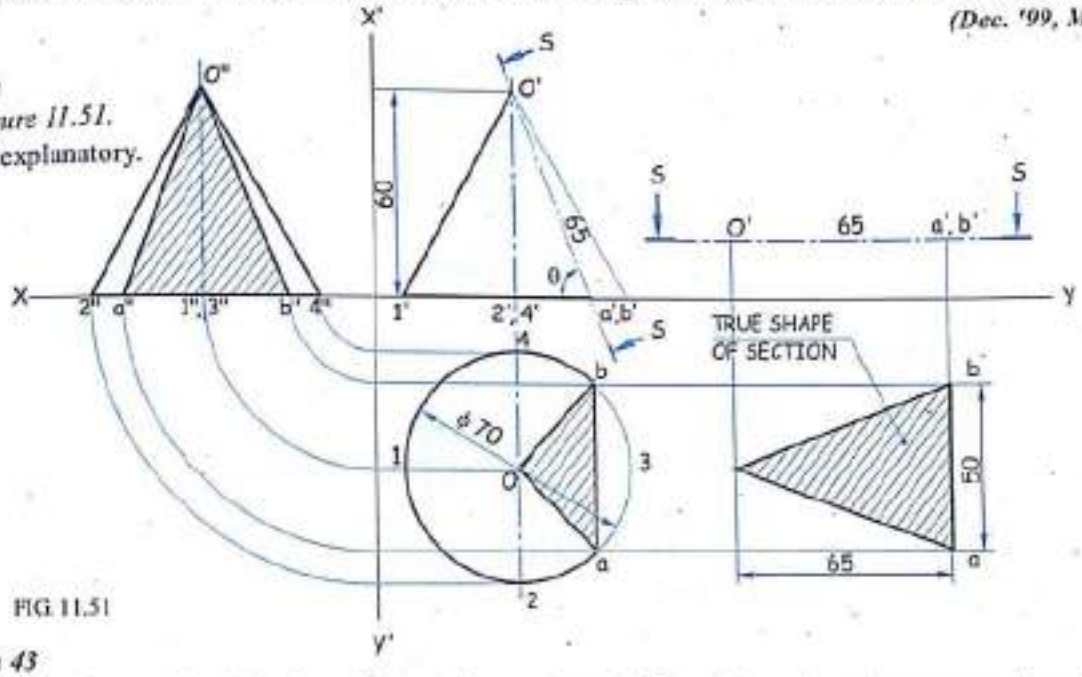

FIG. 11.51

Problem 43

A hexagonal prism, side of the base 25 mm long and axis 65 mm long, is resting on an edge of the base on the H.P. with axis inclined at 60 degrees to the H.P. and parallel to the V.P. A cutting plane, inclined at 45° to the V.P. and normal to the H.P., cuts the prism passing through a point on the axis at adistance of 20 mm from the top end of the axis. Draw sectional front view and the true shape of the section of the prism. *(May '2000, M.U.)*

Solution

Refer figure 11.52.

It is self explanatory.

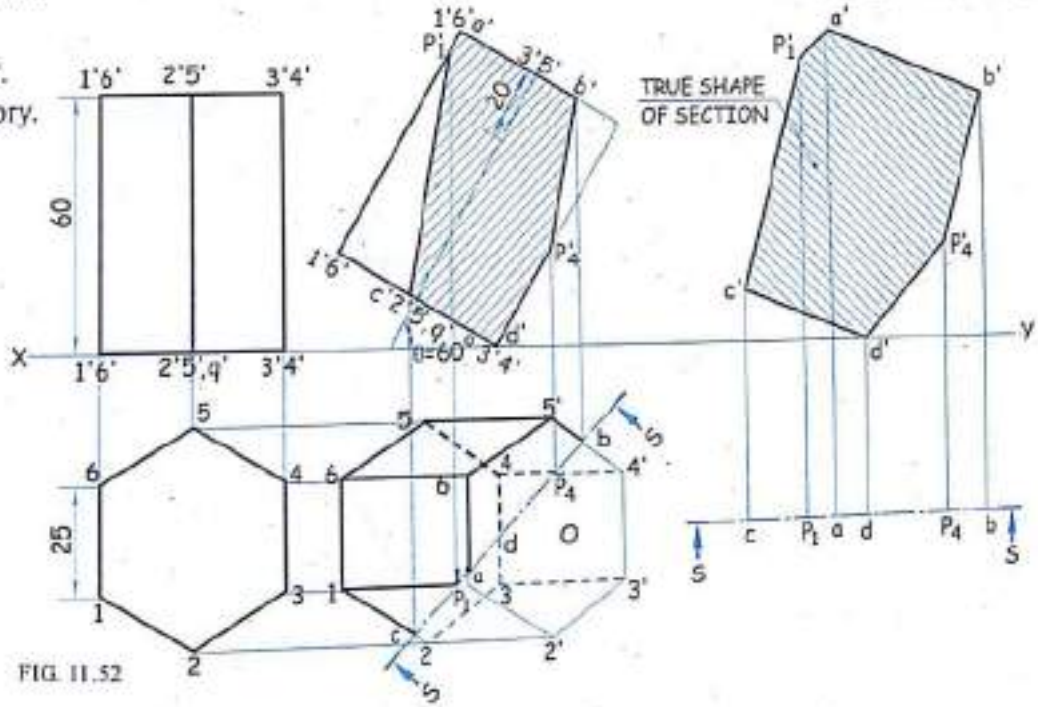

FIG. 11.52

Scanned by CamScanner

Problem 44

A hexagonal pyramid of 25 mm edges of the base and axis 50 mm long is resting on one of its triangular faces in HP with the axis parallel to the VP. It is cut by a section plane perpendicular to the HP, inclined at 30° to the VP and passing through a point *P* on the axis, 20 mm from the base. Draw top view, sectional front view and true shape of the section when apex is removed. ***(Dec. '01, M.U.)***

Solution

Refer figure 11.53.

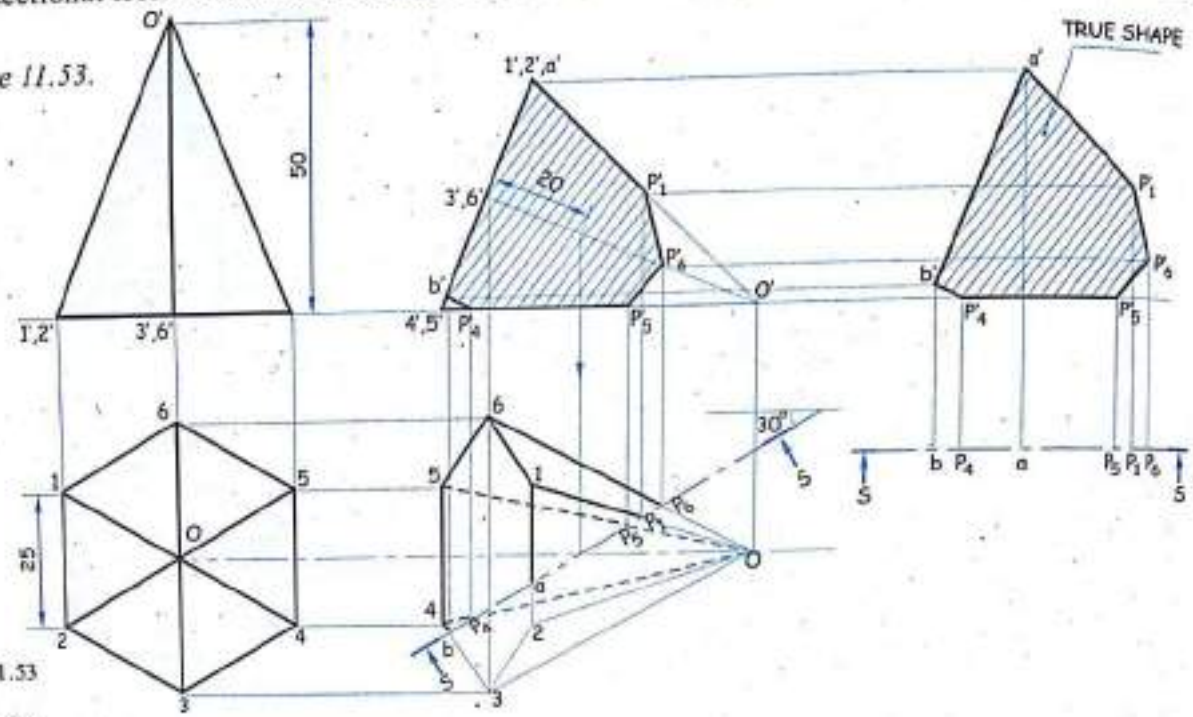

FIG. 11.53

Problem 45

A pentagonal prism of base side 30 mm and length of the axis 70 mm is resting on one of its rectangular faces with its axis inclined at 30° to the V.P. It is cut by a plane 60° to the V.P. and perpendicular to the H.P., bisecting the axis. Draw the top view, sectional front view and true shape of the section. ***(Feb. '01, M.U.)***

Solution

Refer figure 11.54.

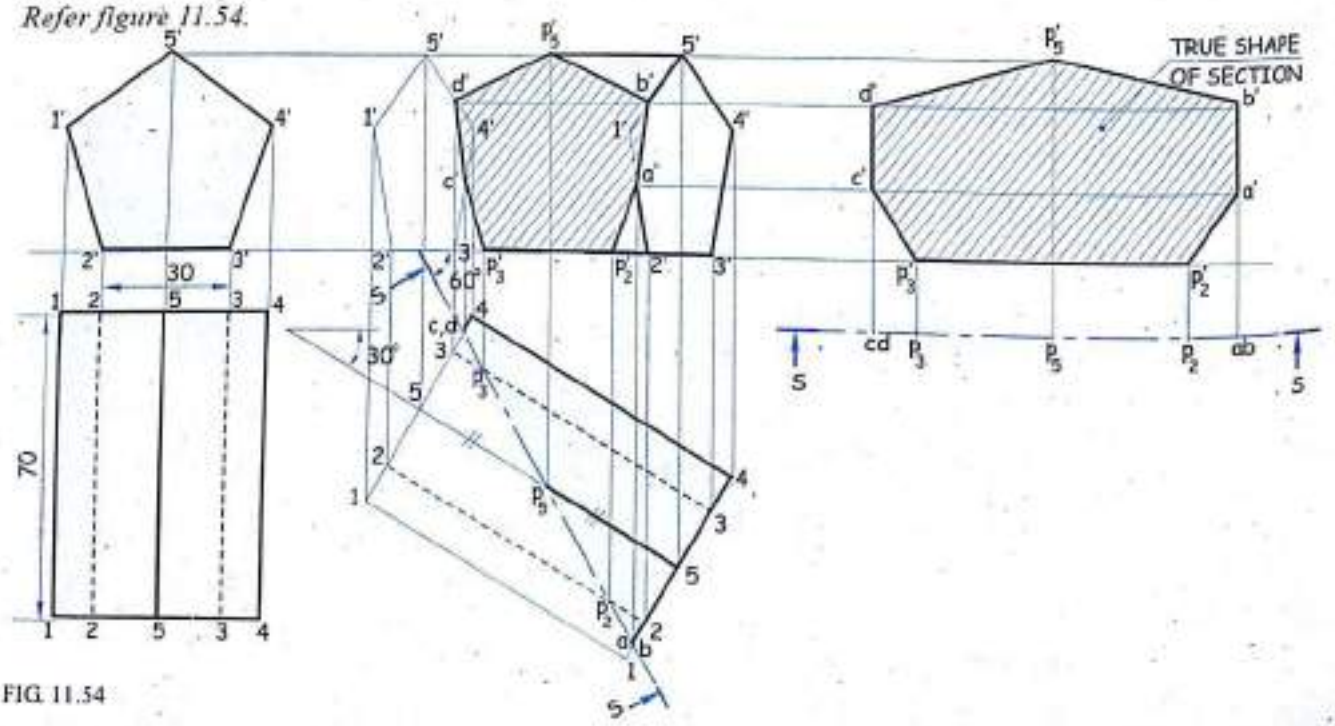

FIG. 11.54

Scanned by CamScanner

11.5 Solved Problems II

Problem 1

A square prism 40 mm side of base, 80 mm height is resting on its base on H.P. with all sides of base making equal angles with V.P. It is cut by a section plane normal to V.P. which passes through the left bottom corner and right top corner of the front view. Draw front view, sectional top view and true shape of the section.

Solution

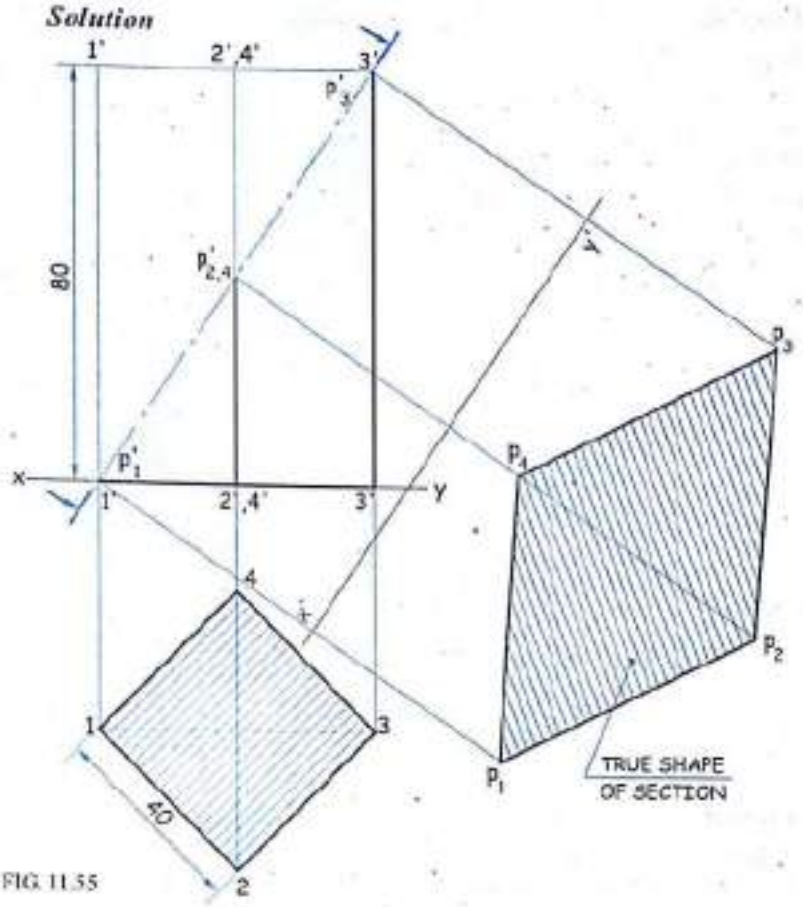

FIG. 11.55

Problem 2

A pentagonal pyramid has its base on the ground and edge of base away from V.P. and parallel to it. A vertical section plane inclined at 45° to V.P., cuts the pyramid at a distance of 10 mm from the axis. Draw top view, sectional front view and true shape of the section. Base of the pyramid 40 mm side and axis 75 mm long. *(Third angle method).*

Solution

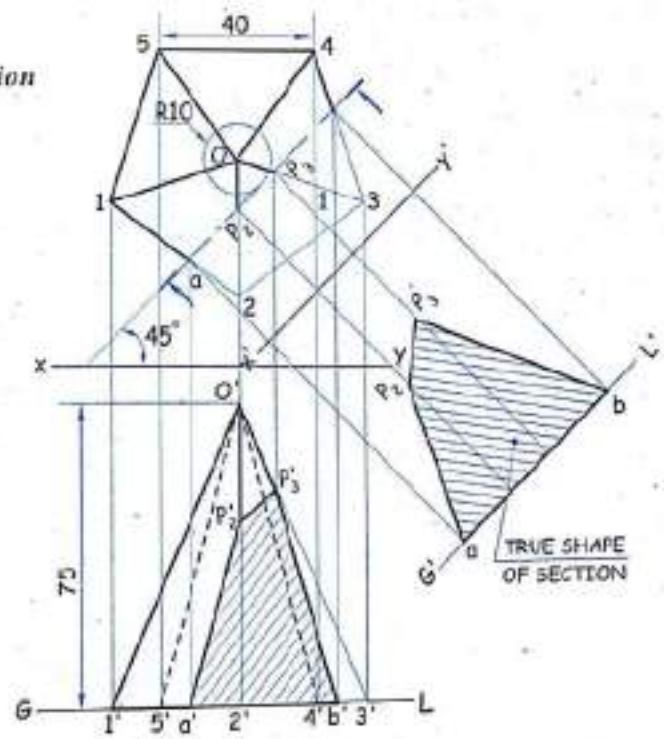

FIG. 11.56

Scanned by CamScanner

Problem 3

A pentagonal pyramid base 30 mm side and height 65 mm stands on its base on H.P. with an edge of base parallel to V.P. A section plane perpendicular V.P. inclined at 45° to H.P. bisects the axis of the pyramid. Draw front view, sectional top view and true shape of the section. *(Third angle method)*.

Solution

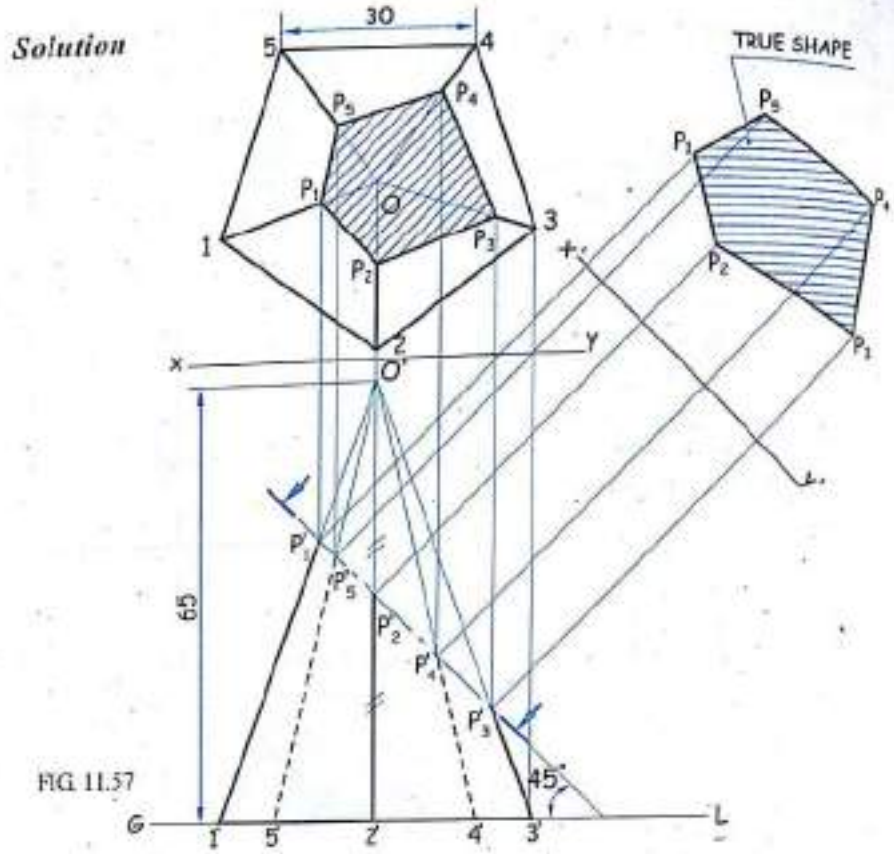

FIG. 11.57

Problem 4

A hexagonal pyramid base 30 mm side axis 65 mm long has its base on H.P. with an edge of base parallel to V.P. A section plane perpendicular to V.P. and inclined at 60° to H.P. bisects the axis of the pyramid. Draw front view, sectional top view and true shape of the section.

(Jan. '03, M.U.)

Solution

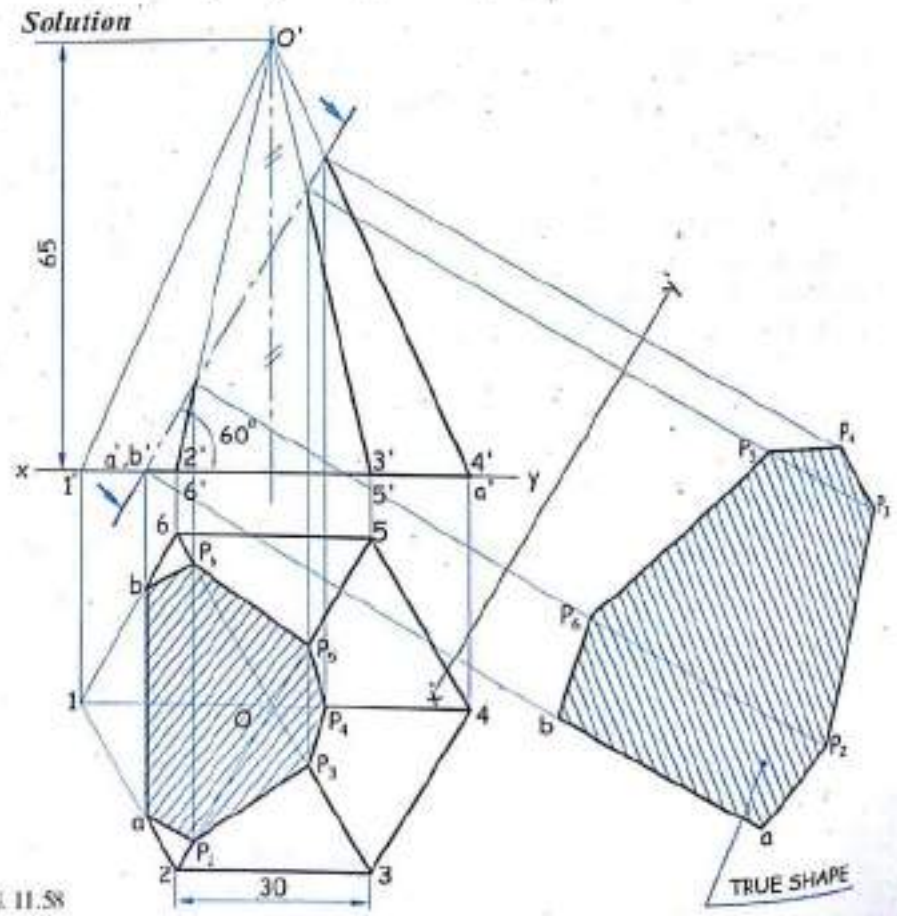

FIG. 11.58

Scanned by CamScanner

Problem 5

A cone diameter 60 mm and length of axis 80 mm stands on its base on the H.P. It is cut by a plane which is perpendicular to V.P. and inclined at 45° with H.P. Draw front view, sectional top view and true shape of the sections. The section plane passes through the point 30 mm below apex along the axis.

Solution

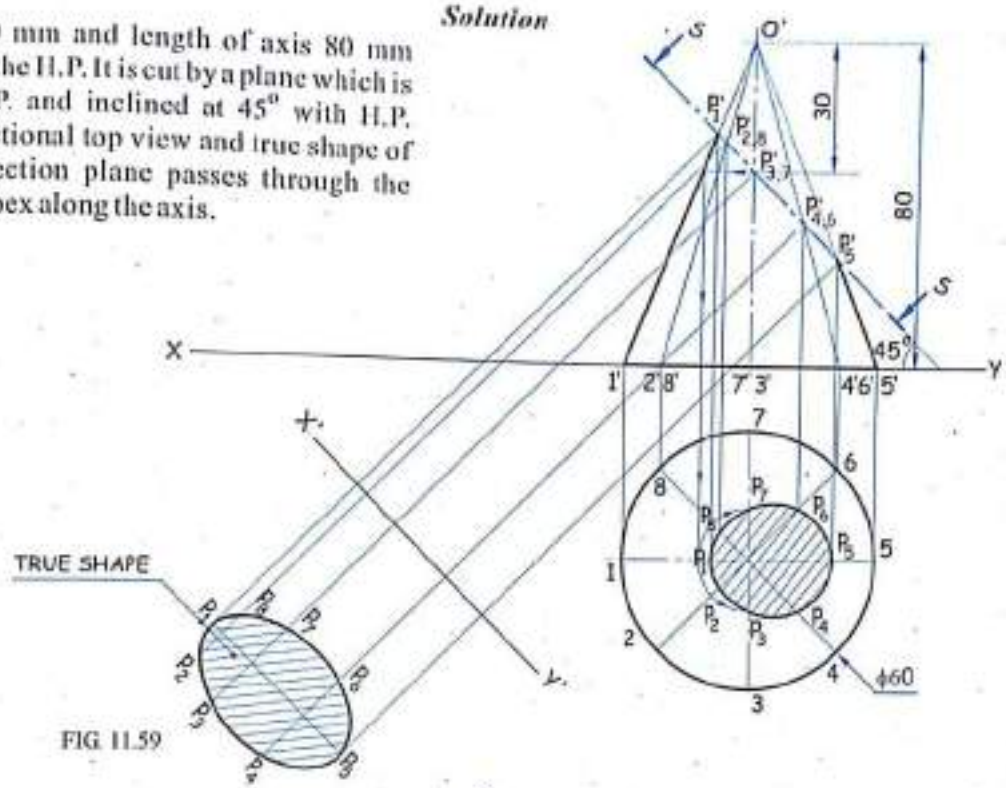

FIG. 11.59

Problem 6

A square prism base 40 mm side, axis 80 mm long has its base on H.P. and the faces equally inclined to V.P. It is cut by a section plane perpendicular to V.P. and inclined at 60° to H.P. and passing through a point on the axis 60 mm above the H.P. Draw front view, sectional top view and true shape of the section.

Solution

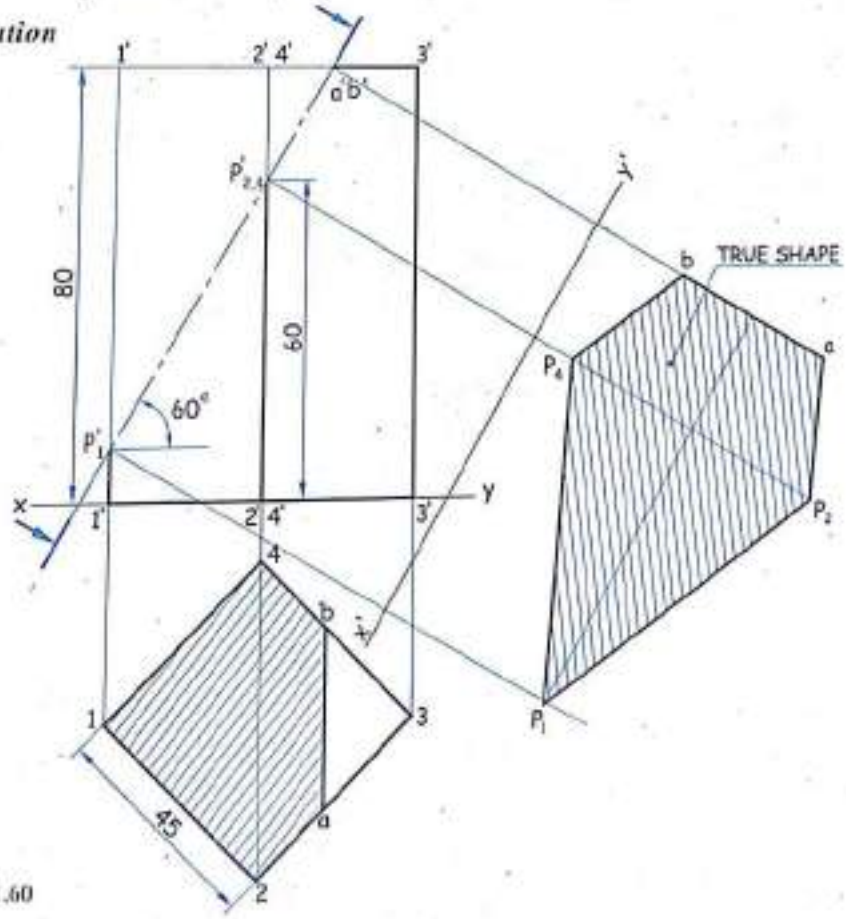

FIG. 11.60

Scanned by CamScanner

Problem 7

A cone, base 70 mm diameter and axis 75 mm long is resting on its base on the ground. It is cut by a section plane perpendicular to V.P. and inclined at 45° to H.P. and cutting the axis at a point 30 mm from the apex. Draw front view, sectional top view and true shape of the section. *(Third angle method).*

Solution

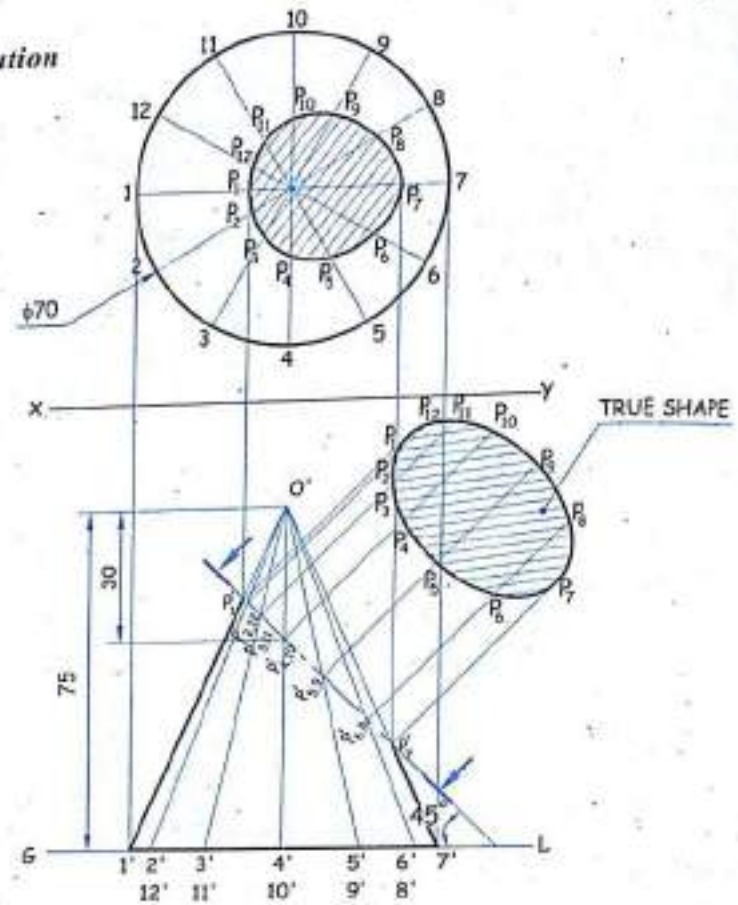

FIG. 11.61

Problem 8

A cone, 70 mm diameter of base, 80 mm height of axis is resting on its base on the ground. It is cut by a section plane perpendicular to V.P. and parallel to and 12 mm away from one of its end generator. Draw its front view, sectional top view and true shape of the section. *(Third angle method).*

Solution

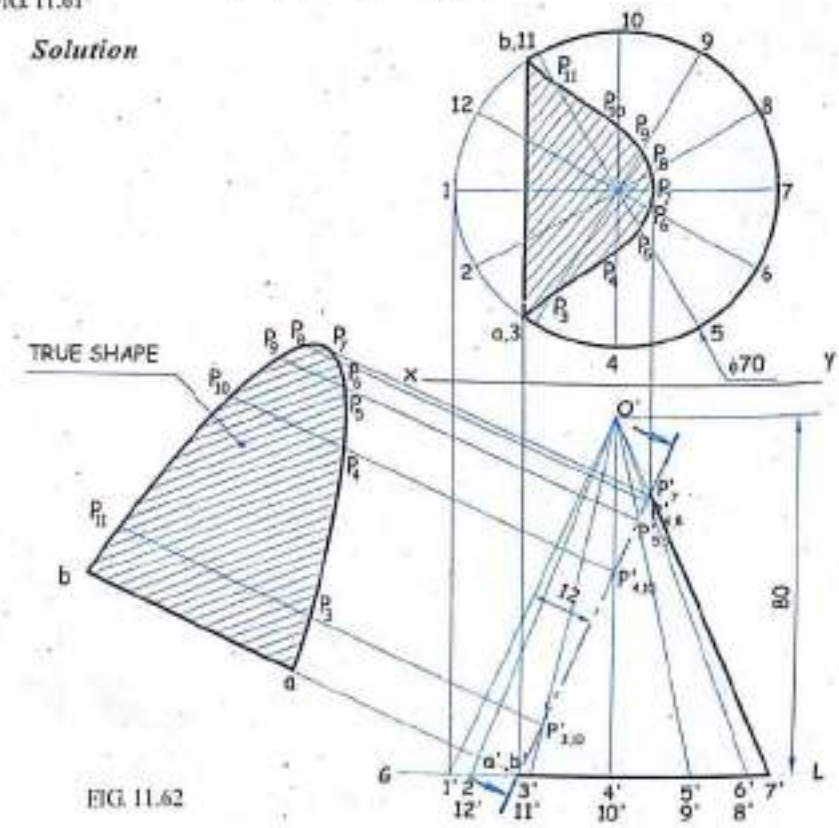

FIG. 11.62

Scanned by CamScanner

Problem 9

A right circular cylinder, base 60 mm diameter axis 90 mm long is lying on H.P. on a generator with axis parallel to V.P. It is cut by a section plane perpendicular to H.P. inclined at 45° to V.P. which passes through a point on the axis 15 mm from one end. Draw top view, sectional front view and true shape of the section.

Solution

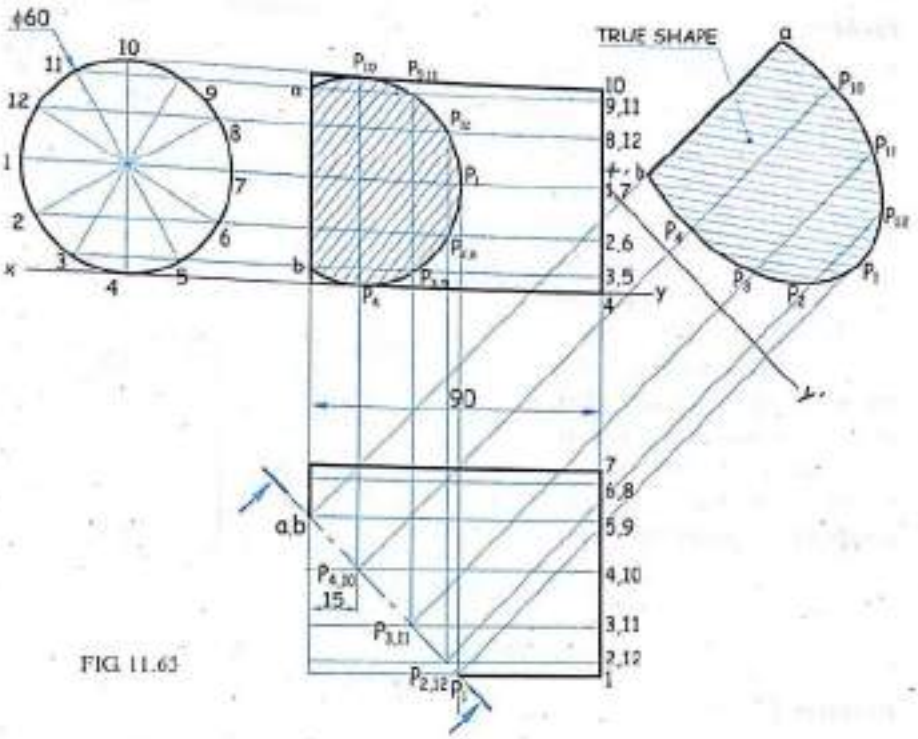

FIG. 11.63

Problem 10

A hexagonal pyramid base 30 mm side, axis 70 mm long has its base on H.P. with an edge of base parallel to V.P. A section plane perpendicular to V.P., inclined at 45° to H.P., cuts the axis of the pyramid 30 mm from the apex. Draw front view, sectional top view and true shape of the section.

Solution

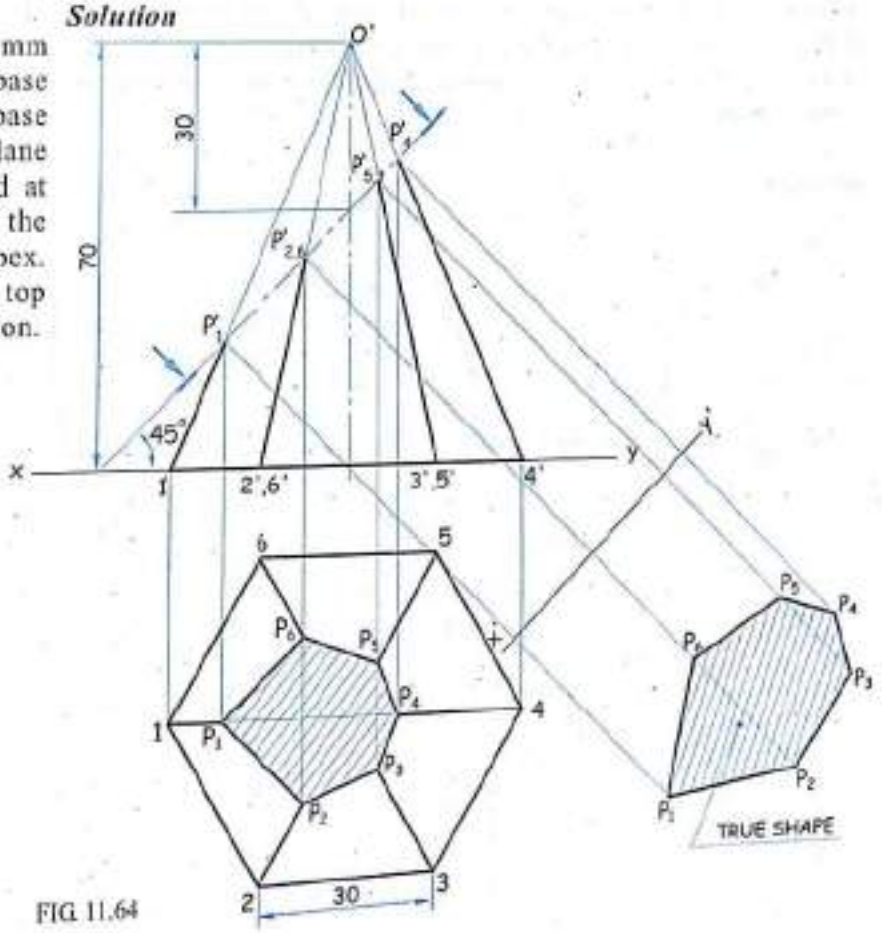

FIG. 11.64

Scanned by CamScanner

Problem 11

A cone of 60 mm diameter and 70 mm axis length is resting on a point of its base in HP with axis inclined at 45° to HP. It is cut by auxiliary inclined plane such that the true shape of the section is parabola of 60 mm height. Draw front view, sectional top view and true shape of the section when apex is removed. Measure inclination of the cutting plane and base of the parabola. *(July '02, M.U.)*

Solution

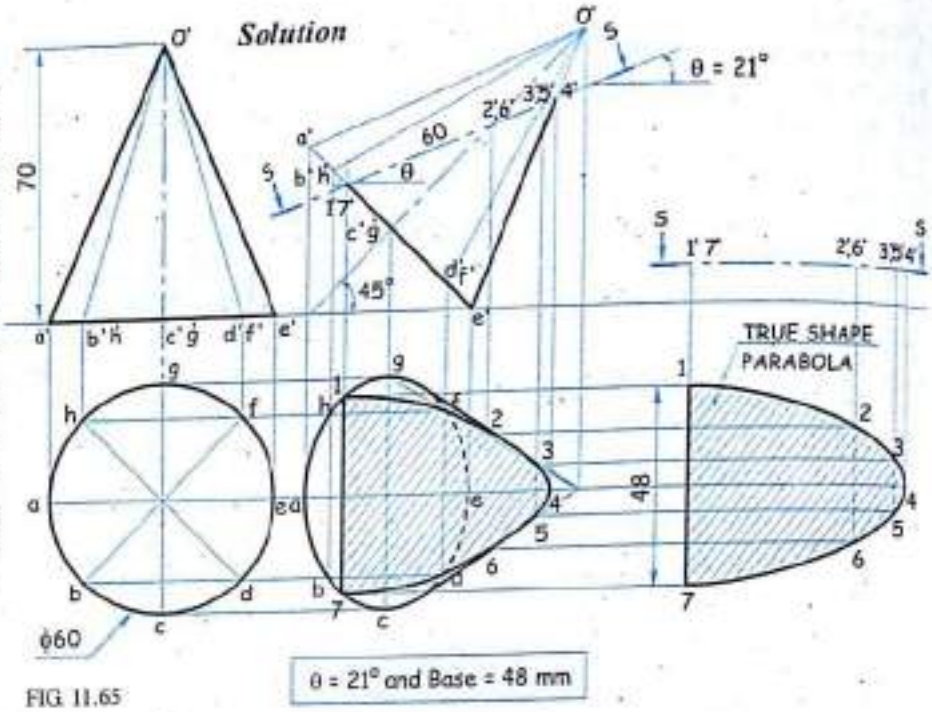

FIG. 11.65

Problem 12

A horizontal pentagonal prism, side of base 32 mm and axis 70 mm long has its rectangular face on H.P. Its axis is parallel to the H.P. and perpendicular to V.P. A cutting plane, perpendicular to H.P. but at 45° to V.P. cuts its axis at a point 20 mm from the centre of base. Draw its sectional front view, top view, sectional side view and true shape of section. *(Dec. '03, M.U.)*

Solution

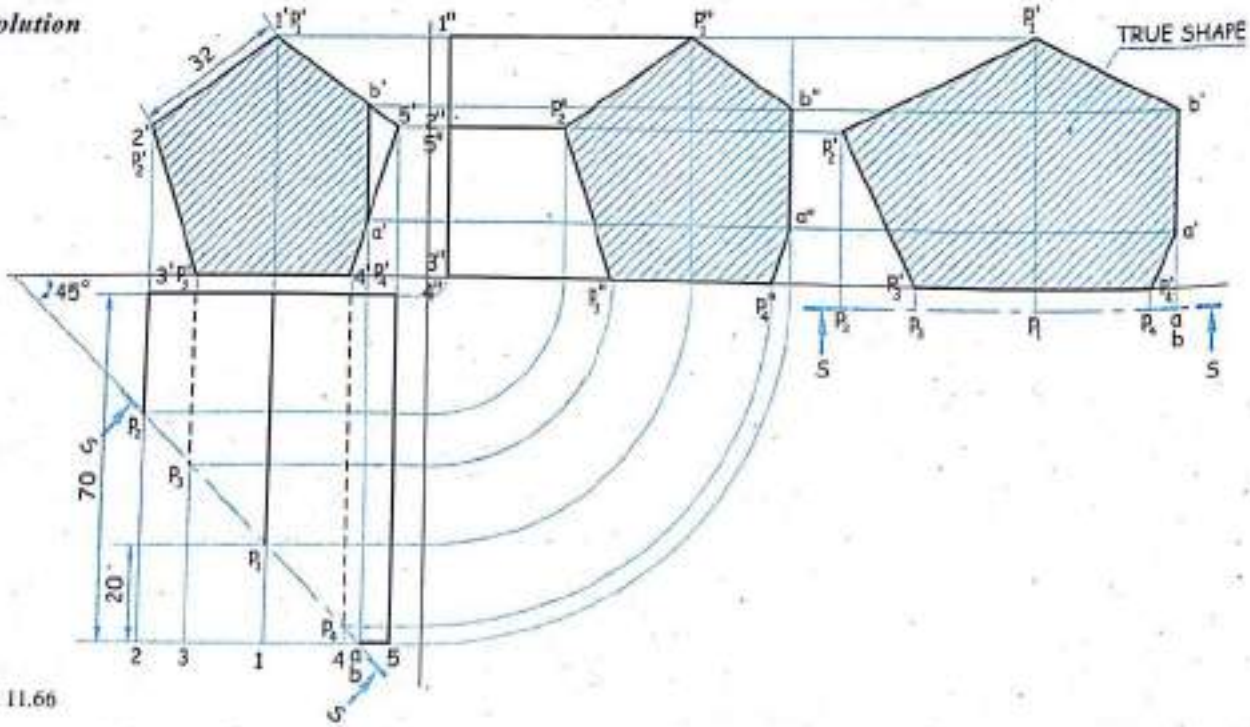

FIG. 11.66

Scanned by CamScanner

Problem 13

A triangular prism, with base side 40 mm and axis length of 100 mm is resting on one of its rectangular faces in HP, with axis parallel to VP. It is cut with an auxiliary inclined plane in such a way that the true shape of the section is a trapezium with its parallel sides of 10 mm and 30 mm respectively. Draw the projections of the solid, locate the position of cutting plane and obtained the true shape of the section. Also draw sectional top view. ***(June '04, M.U.)***

Solution

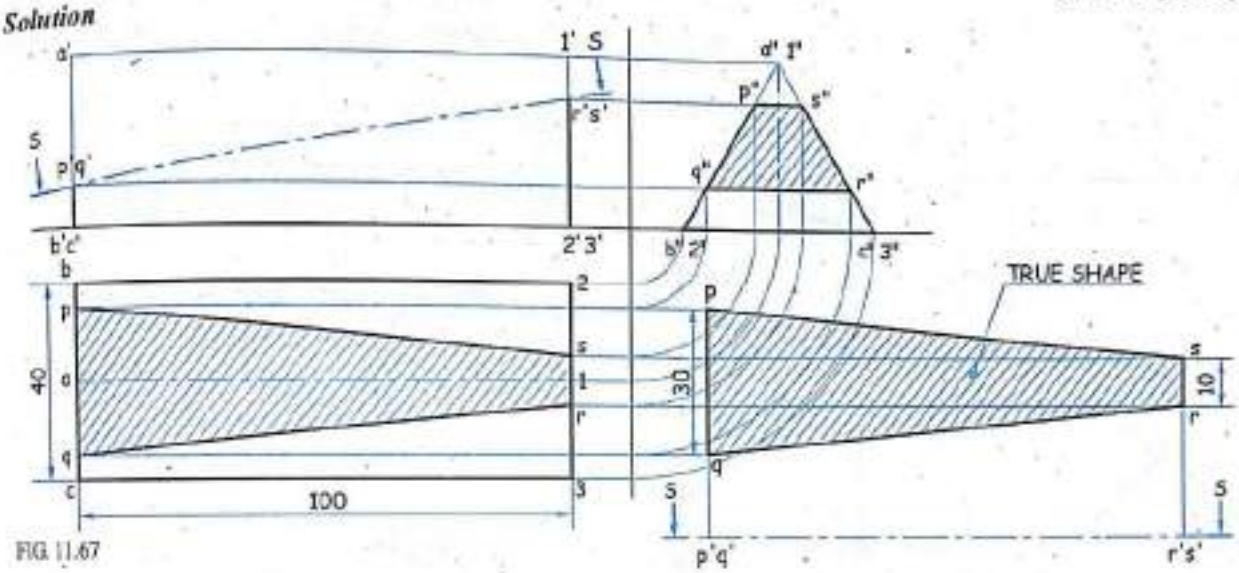

FIG. 11.67

Solution

Problem 14

A square pyramid side of base 60 mm and 100 mm height stands vertically on the H.P. with a pair of its triangular faces perpendicular to the V.P. It is cut by an A.I.P. in such a way the true shape of the section is a trapezium whose parallel sides measure 60 mm and 30 mm. With the height of trapezium maximum possible, obtained the apparent and true shape of the sections and find the inclination of the section plane with the H.P. ***(Nov. '04, M.U.)***

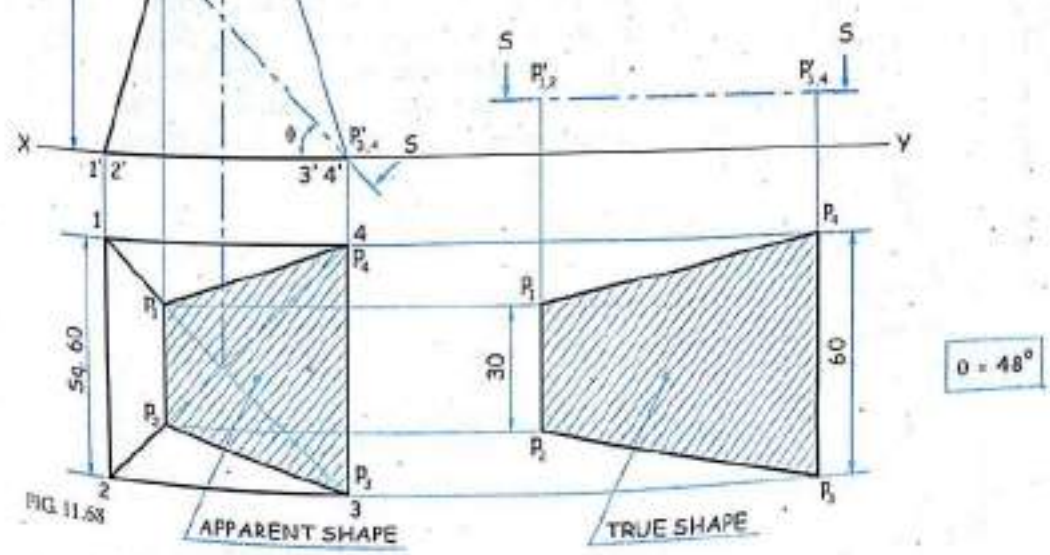

FIG. 11.68

Scanned by CamScanner

Problem 15

A cube of side 50 mm is lying on H.P. on it's square base. It is cut by a section plane such that the true shape of the section is a trapezium of parallel sides equal to length of diagonal of the square face for one side and half of that length for the other side. Draw the front view, sectional top view and true shape of the section. Measure the angle made by the cutting plane with the H.P. *(June '05, M.U.)*

Solution

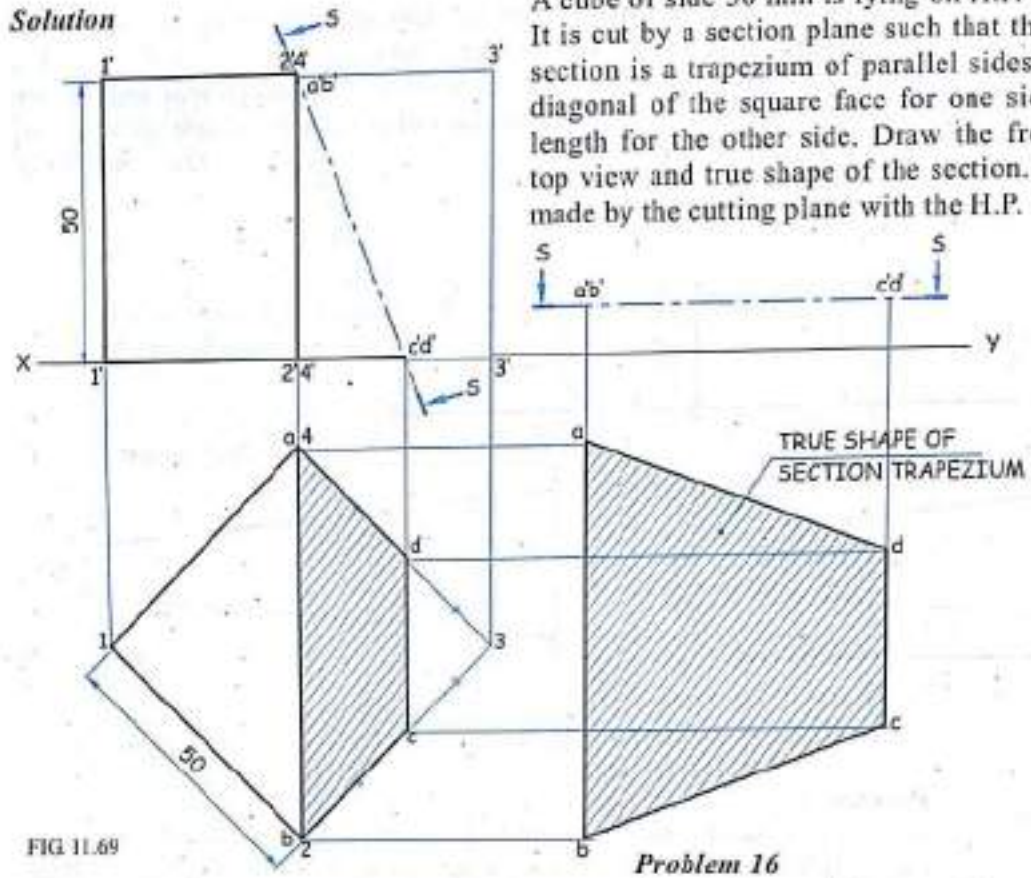

FIG. 11.69

Problem 16

A semi cone of diameter 80 mm and 90 mm axis length is resting on it's semicircular base on H.P., such that the triangular face of the semi cone is parallel to V.P. and away from the observer. It is cut by a section plane perpendicular to V.P. and inclined at 45° to the H.P. passing through the mid point of the axis. Draw the sectional plan, elevation and true shape of the section. also add the right hand side view which gives the sectional detail on it. *(Nov. '04, M.U.)*

Solution

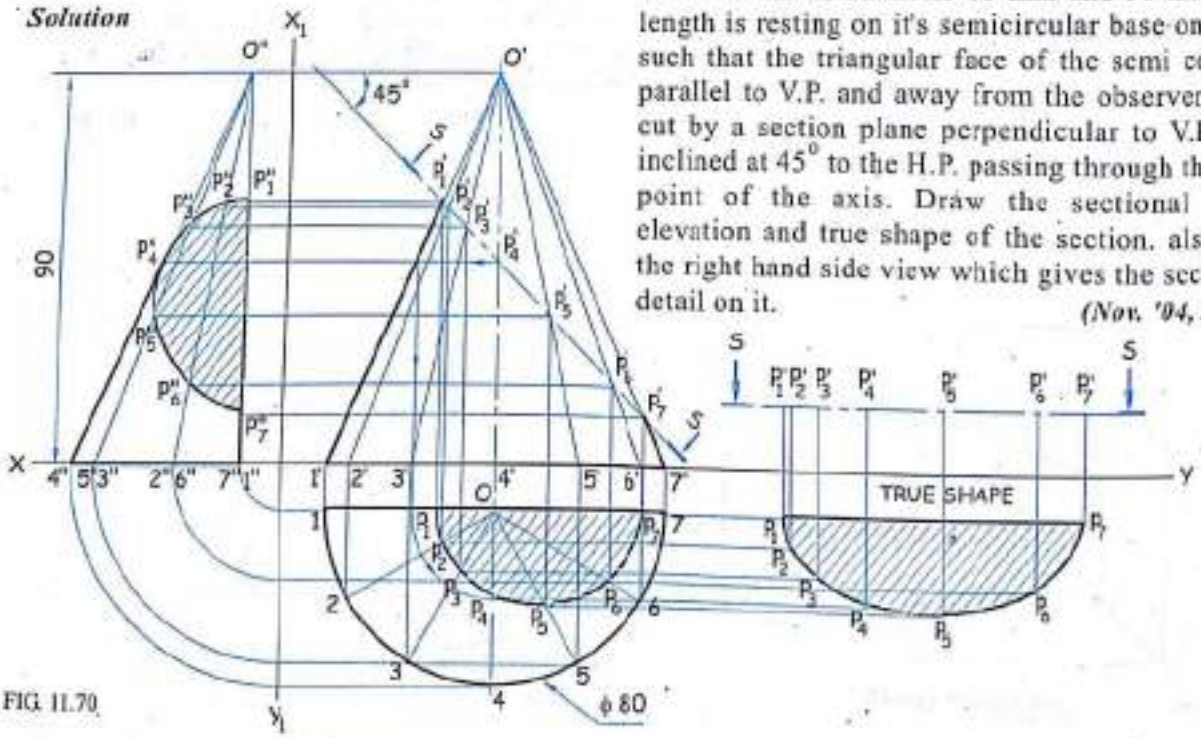

FIG. 11.70

Scanned by CamScanner

Problem 17

A pentagonal pyramid (side of base 30 mm and axis 50 mm) is kept on the ground on one of its triangular faces with the axis parallel to F.R.P. A vertical section plane, making 45° with F.R.P. cuts the solid intersecting the axis at a point 30 mm from the apex, thereby removing the portion containing the apex. Draw the projections of the remaining portion of the solid and show the true-shape of the surface.

(June '06, M.U.)

Solution

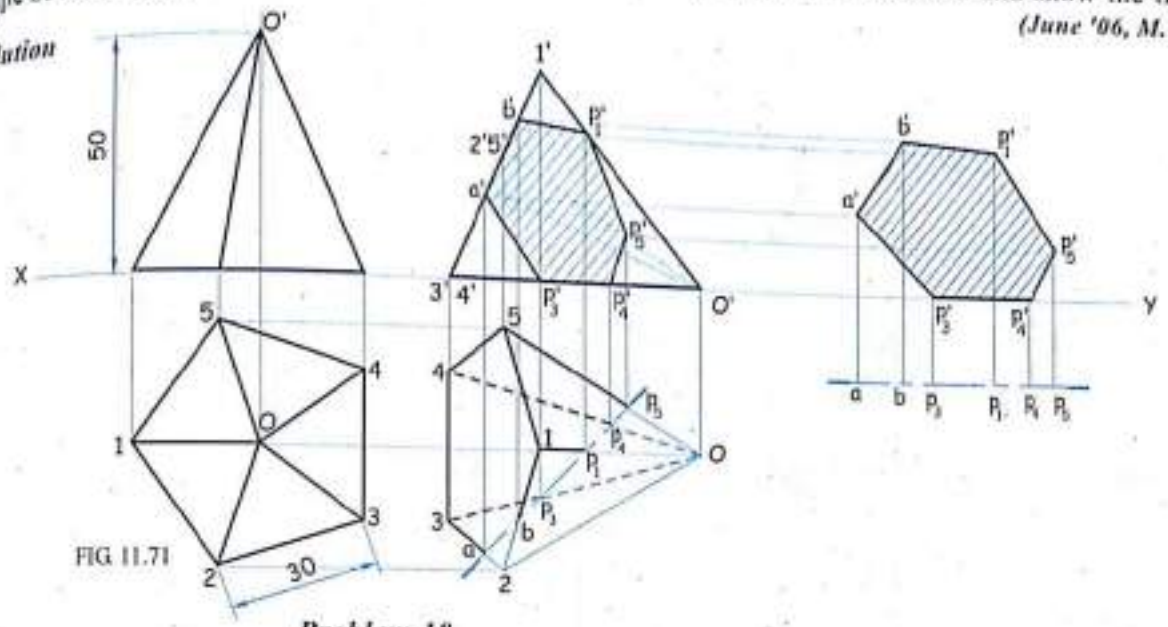

FIG 11.71

Problem 18

A square pyramid with side of base 30 mm and height 75 mm is placed with its edge of base on the H.P. A section plane perpendicular to front reference plane cuts the Pyramid such that the true shape of section is a pentagon of any size. Draw Tue Shape and inclination of section plane and also draw the projection of cut square when the base of pyramid is inclined at 40° to H.P. and the plane containing axis and the larger slant edge of cut Pyramid is inclined at 45° to V.P. with the base of pyramid nearer to observer.

(June '07, M.U.)

Solution

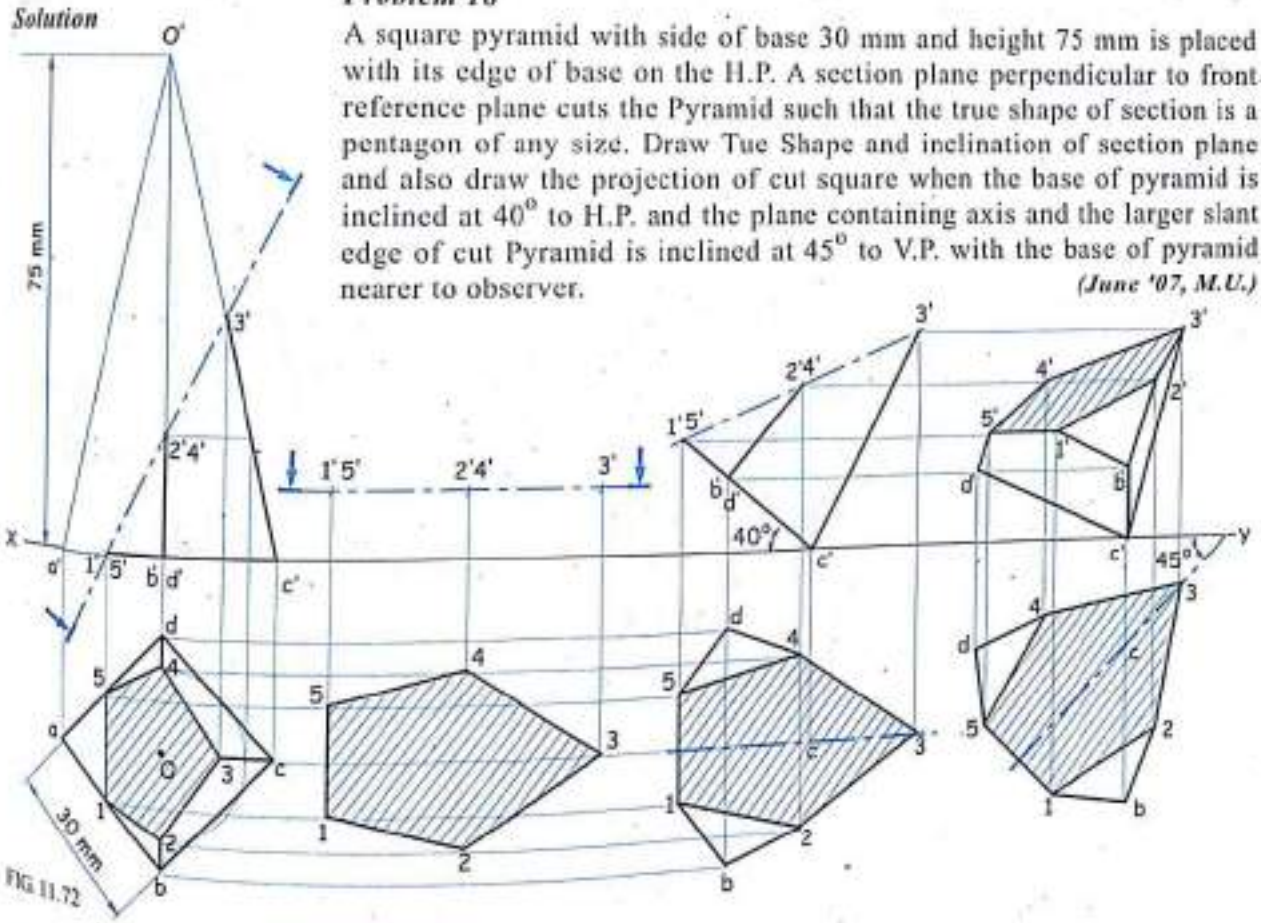

FIG 11.72

Scanned by CamScanner

Problem 19

A pentagonal pyramid side of base 35 mm and height 70 mm rests on its base on H.P. with one side of the base perpendicular to V.P. It is cut by on A.I.P. Such that the true shape of section is an isosceles triangle of maximum possible base and minimum height. Draw its F.V., sectional T.V. and true shape of the section. *(May '08, M.U.)*

Solution

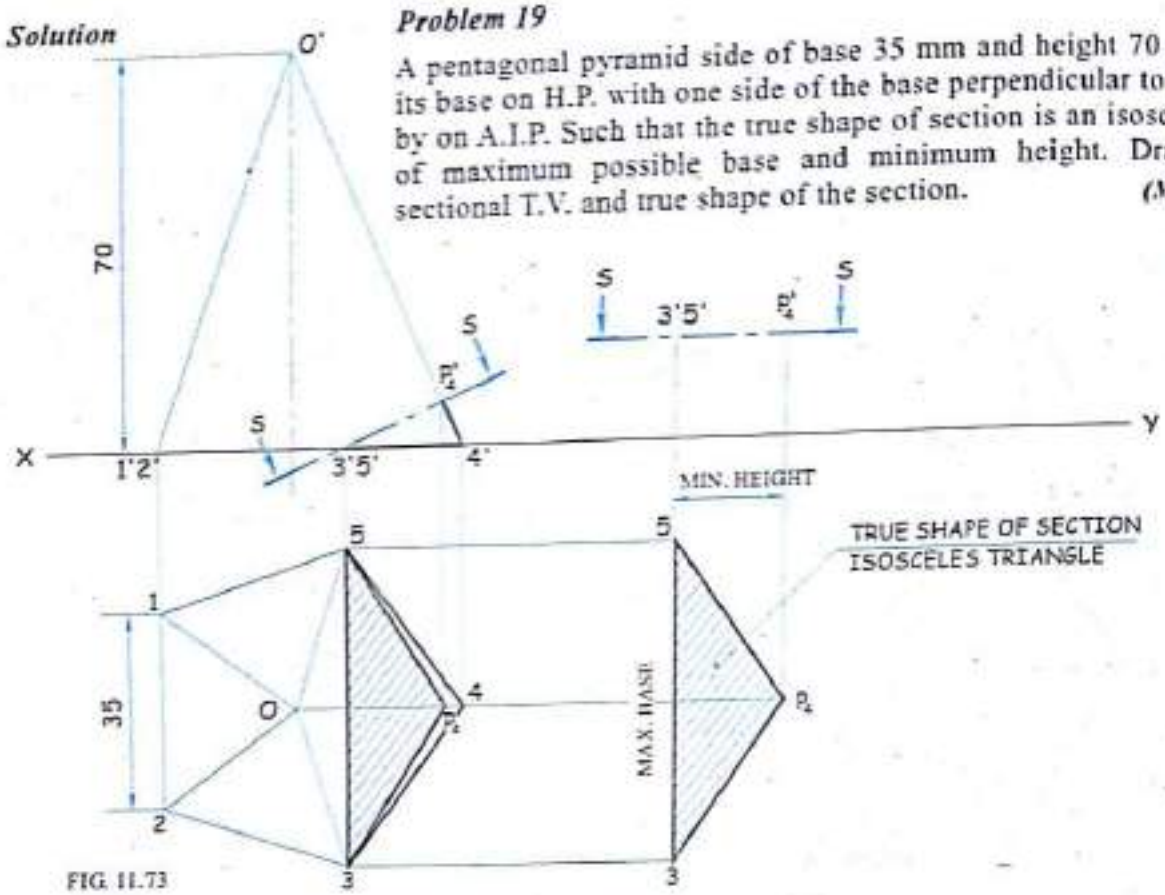

FIG. 11.73

Problem 20

A cone of diameter 60 mm and height 70 mm rests on H.P. on its base. A cutting plane (A.V.P.) perpendicular to H.P. and inclined to V.P. at 45°, cuts the cone 10 mm infront of the axis. Draw the top view, sectional front view and true shape of section.

Solution

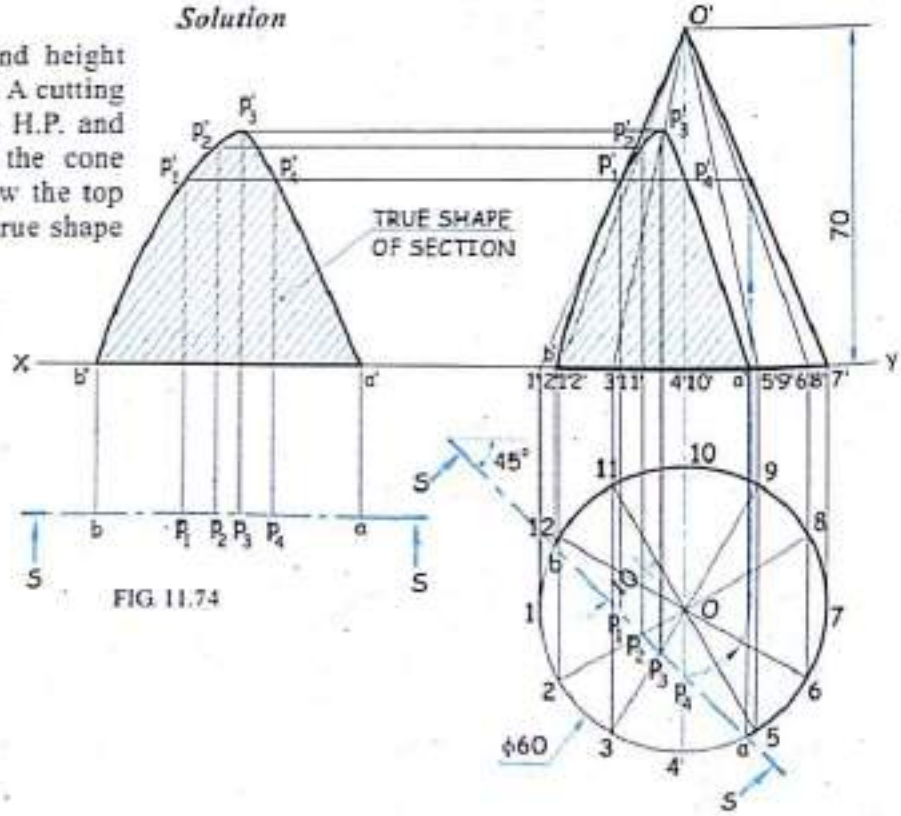

FIG. 11.74

Scanned by CamScanner

Problem 21

A cone, diameter of base 40 mm, axis 50 mm, is resting on its base on the H.P. It is cut by a section plane perpendicular to both the reference planes in such a way that the section plane is at the distance of 8 mm from the axis of a cone. Draw the F.V., T.V. and the sectional side view. Name the sectional true shape obtained. *(May '09, M.U.)*

Solution

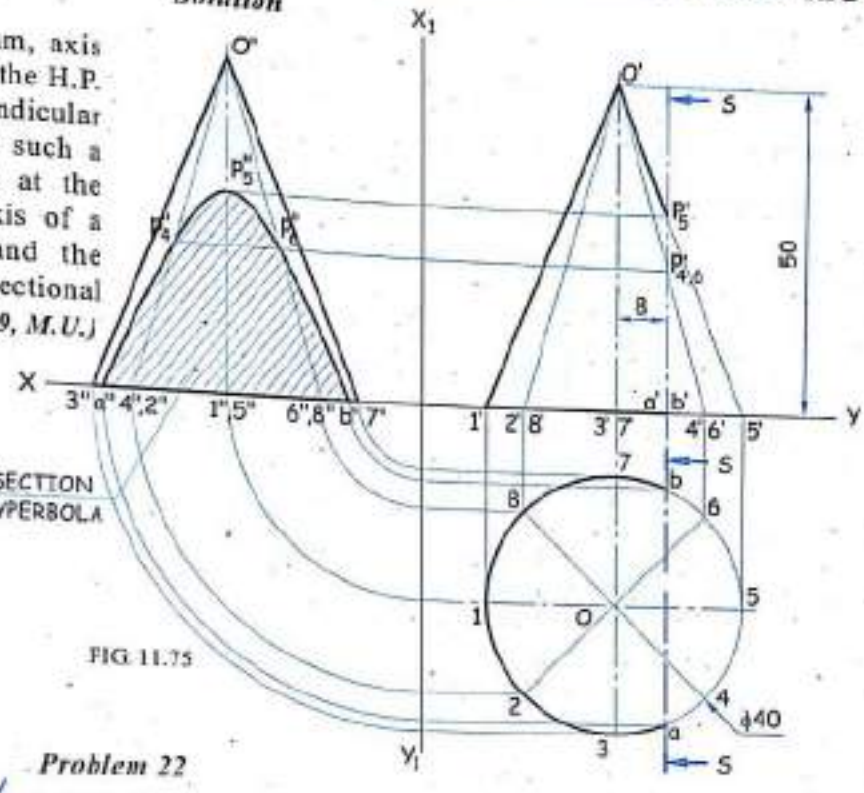

FIG. 11.75

Problem 22

A right circular cone of diameter 60 mm and length of the axis 60 mm is resting on the H.P. on its base. It is cut by a cutting plane perpendicular to the V.P. and inclined to the H.P. such that the true shape is a parabola of height 60 mm. Draw the F.V., sectional T.V. and the true shape of a section. Measure the angle made by the cutting plane with the H.P. and the base of a parabola.

(Dec. '09, M.U.)

Solution

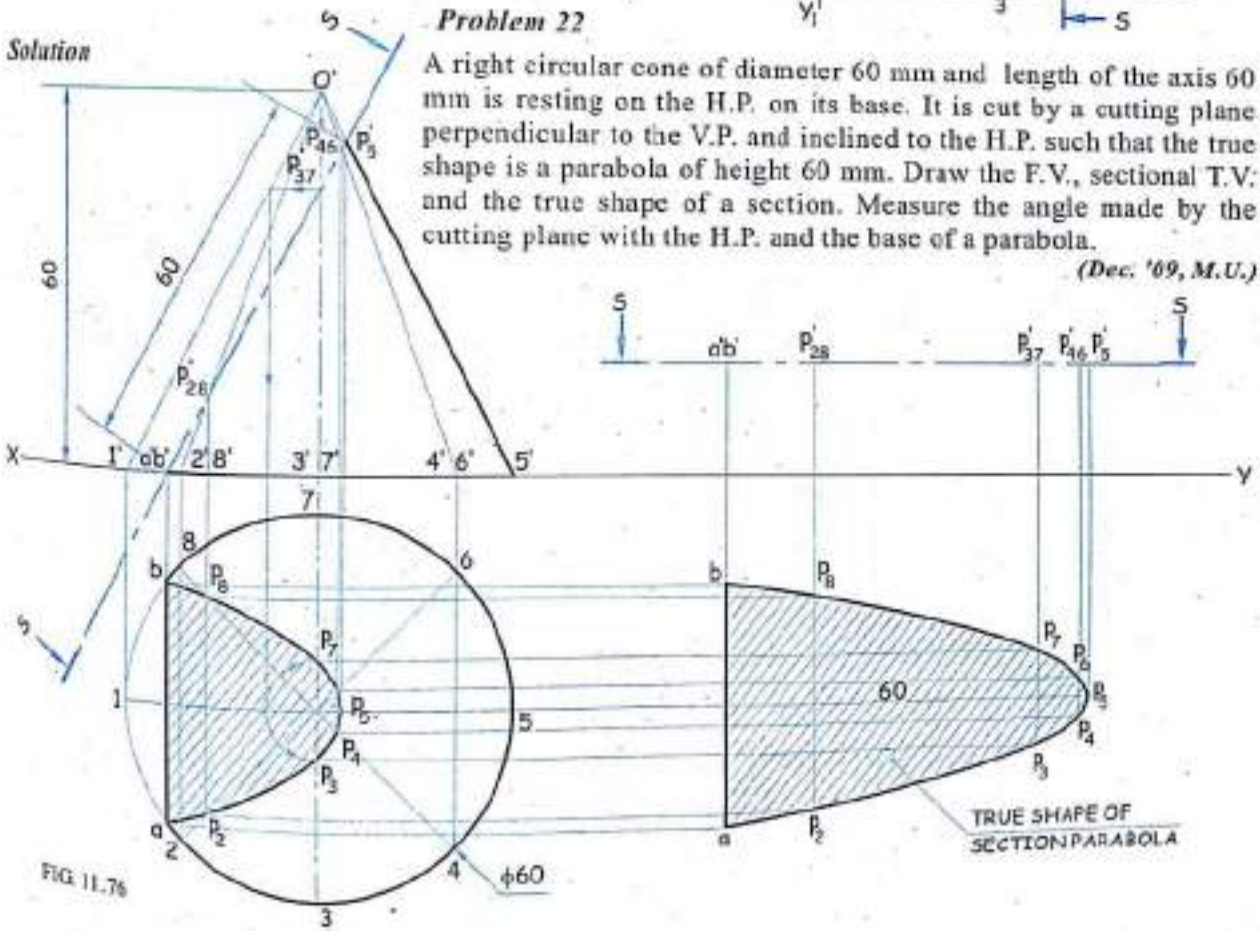

FIG. 11.76

Scanned by CamScanner

Problem 23

A cube of edge 60 mm is resting on H.P. with all vertical faces equally inclined to V.P. It is cut by section plane perpendicular to V.P., inclined to H.P. Such that true shape of cut face is trapezium with parallel sides 65 mm apart. One of the parallel side which is longer measures 70 mm. Draw F.V. sectional T.V. and true shape of cut face. Find inclination of section plane and length of smaller parallel side of the trapezium.

(May '10, M.U.)

Solution

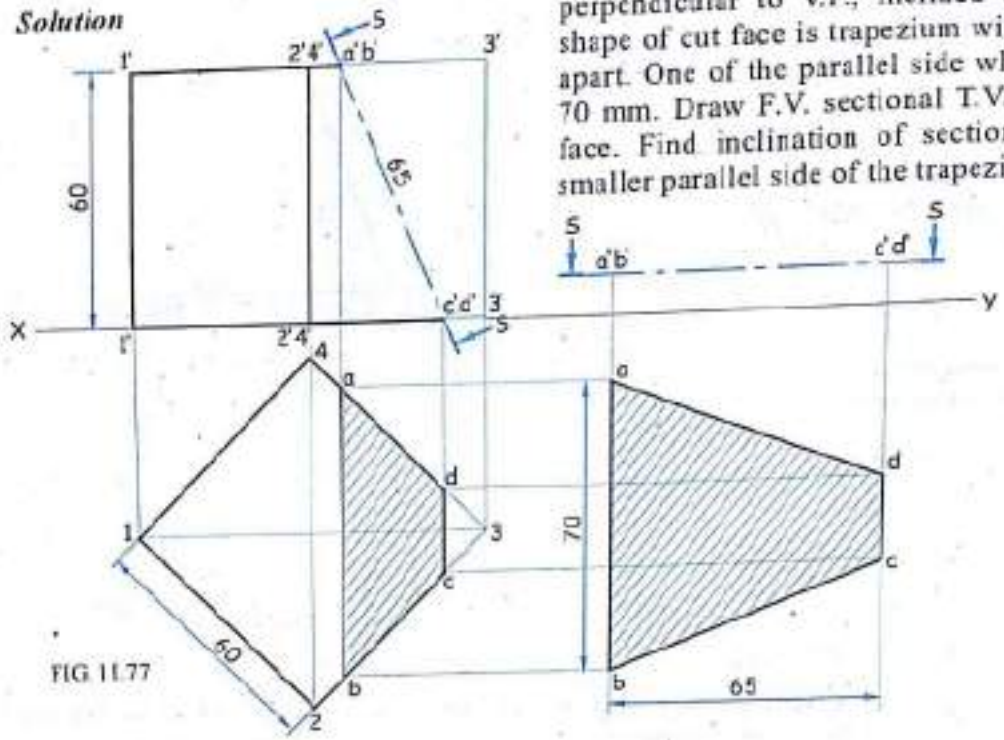

FIG 11.77

Problem 24

A square prism 80 mm long is cut in to two halves, so that the true shape of the cut surface is a rhombus of 40 mm side and one of its angles being 70°. Draw the F.V. sectional T.V. and true shape of the section. Also find the cutting plane inclination with H.P., if the prism is resting on H.P. with rectangular faces equally inclined to V.P.

(May '11, M.U.)

Solution

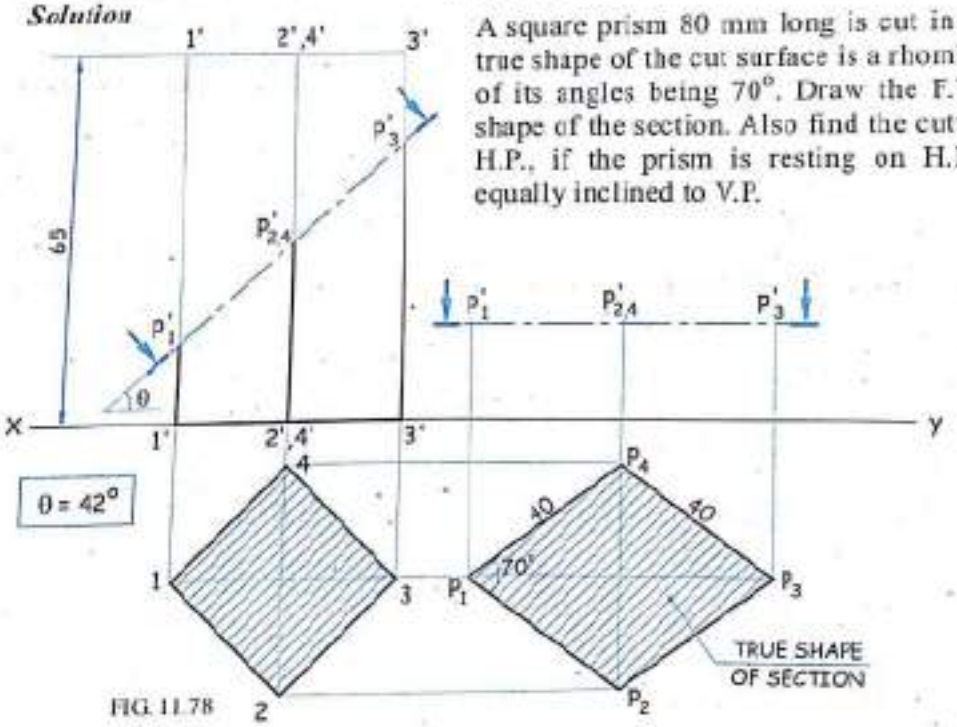

FIG. 11.78

Scanned by CamScanner

11.6 Exercise

Triangular Prism

1. An equilateral triangular prism of 50 mm side and base and 80 mm length of an axis lies on one of its rectangular faces on the H.P. with the axis at 45° to the V.P. It is cut by a section plane perpendicular to the V.P. and inclined at 30° to the H.P. and which passes through a point on the axis 36 mm from the nearer end. Draw three views of the cut prism.
2. A triangular prism, side of base 40 mm and height 75 mm rests with one of its base edge on the H.P. such that the axis is inclined at 30° to the H.P. and parallel to the V.P. A sectional plane perpendicular to the V.P. and parallel to the H.P. passes through the lowest triangular edge of the top face. Draw the sectional view.
3. A triangular prism of 70 mm sides and 60 mm length of axis has a circular hole of 25 mm diameter cut through its flat ends so that the axis of a hole coincides with that of a prism. The prism is standing with its base on the H.P. and the side of base is parallel to the V.P. A cutting plane perpendicular to the V.P. and inclined at 60° to the H.P., cuts the prism and passes through the point on the axis 20 mm from the top end. Draw the F.V., sectional T.V. and the true shape of a section.
4. A triangular prism, base 40 mm side and axis 60 mm long is lying on the H.P. on one of its rectangular face, with its axis inclined at 30° to the V.P. It is cut by the horizontal section plane at a height of 12 mm above the H.P. Draw its F.V. and sectional T.V.

Square Prism

5. A square prism of 30 mm edge of base and 70 mm length of axis stands on its square base with all the edges of base equally inclined to the V.P. a cutting plane perpendicular to the V.P. and inclined to the H.P. cuts the prism so that the true shape of a section is the largest possible equilateral triangle. Draw the F.V., sectional T.V. and the true shape of a section.
6. A square prism of base 30 mm side stands vertical. It is cut by the section plane in such a way that the true shape of the cut surface is a hexagon having two opposite parallel sides 30 mm long and the remaining four sides 40 mm long. Determine the height of a prism and an inclination of the section plane. Draw the F.V., sectional T.V. and the true shape of a section.
7. A square prism of 50 mm side of base and height 75 mm rests with one of its corner of the base on the H.P. such that the axis is inclined at 30° to the H.P. and parallel to the V.P. A section plane perpendicular to the V.P. and parallel to the H.P. passes through the highest corner of the base. Draw the sectional T.V. The two of the base edges passing through the corner on which it rests make equal inclination with the H.P.

Rectangular Prism

8. A rectangular prism base 40 mm × 60 mm and axis 80 mm long has a 40 mm edge on the ground, perpendicular to the V.P. and the base is inclined at 30° to the H.P. A cutting plane perpendicular to the H.P. inclined at 45° to the V.P. cuts the prism and passes through the point on the axis 30 mm from the base. Draw three views of the cut pyramid.
9. A rectangular prism of height 80 mm and cross section 50 mm × 25 mm is standing with its base on the H.P. It is cut by the plane in such a way that the true shape of a section is the square of sides of maximum dimension. Measure the inclination of the cutting plane with the H.P. Draw the sectional view and the true shape of a section.

Scanned by CamScanner

Cube

10. A cube of side 50 mm has a circular hole, drilled through its top flat face centrally, through and through with the diameter of the hole equal to 40 mm. The solid is lying on the H.P. on one of its base corner and the edges of the base containing that base corner are equally inclined to the ground (H.P.) and the axis of a hole making an angle of 45° to the H.P. It is cut by the section plane, the vertical trace of which makes an angle of 30° to the *XY* line, passing through the midpoint of the axis and leaning towards the ground (H.P.) on the right side of the observer. Draw the F.V., sectional plan and the true shape of a section. *(Nov. '92, M.U.)*
11. A cube of 40 mm long edges rests with one of its faces on the H.P. such that one of its vertical face is inclined at 30° to the V.P. A section plane perpendicular to the H.P. and inclined at 60° to the V.P. passes through the cube such that the square face making 30° with the V.P. is cut into two halves. Draw the sectional F.V. and the true shape of the section.
12. A cube of 50 mm edges rests with one of its corner on the H.P. such that the edge containing this corner is inclined at 60° to the H.P. and parallel to the V.P. The other two edges passing through the corner on which it rests make equal inclinations with the H.P. A section plane perpendicular to the H.P. and inclined at 30° to the V.P. bisects the axis of a cube. Draw the sectional view and the true shape of a section.
13. A cube of 40 mm edges rests with an edge on the H.P. This edge is parallel to the V.P. and one of the square face containing this edge is inclined at 30° to the H.P. A section plane perpendicular to the V.P. and inclined at 45° to the H.P. bisects the axis of a cube. Draw the F.V., T.V. in section and also the profile view showing the section.

Pentagonal Prism

14. A pentagonal prism with side of base 40 mm and length of axis 60 mm rests on one of its rectangular faces on the H.P. The axis of a solid is parallel to both the H.P. and the V.P. The solid is cut by an auxillary inclined plane making an angle of 30° with the H.P. The cutting plane bisects the axis of a solid. Draw the apparent and the true shape of a section.
15. A pentagonal prism base side 30 mm, length of axis 80 mm, is resting on a base edge on the H.P. with a rectangular face containing that edge being perpendicular to the V.P. and inclined to the H.P. at 60°. It is cut by the horizontal section plane whose V.T. passes through the mid-point of the axis. Draw the F.V., sectional T.V. and add the profile view.
16. A pentagonal prism side of base 30 mm, axis 75 mm long is resting on a rectangular face on the H.P. with an axis inclined at 30° to the V.P. A cutting plane perpendicular to the H.P. and inclined at 45° to the V.P. cuts the prism passing through the point on the axis 25 mm from the nearer end. Draw the sectional F.V. and T.V.
17. A pentagonal prism with 30 mm edge of pentagon and 60 mm length of axis rests on one of its longer edge on the H.P. having a face containing that edge at 30° to the H.P. The axis being parallel to both the H.P. and the V.P. and in this position only two faces of a prism are visible in the F.V. It is cut by the plane whose H.T. is inclined at 30° to the V.P. bisecting the axis of a prism. Draw the sectional F.V., T.V. and the true shape of a section.
18. A pentagonal prism, side of base 30 mm and axis 70 mm long has a rectangular face in the H.P. and axis parallel to the V.P. It is cut by the vertical plane, the H.T. of which makes an angle of 30° with the *XY* line bisects the axis. Draw the sectional F.V., T.V. and the true shape of the section.
19. A pentagonal prism of side of base 30 mm and length of axis 65 mm has a rectangular surface on the H.P. and the axis is parallel to the V.P. It is cut by the sectional plane, perpendicular to the V.P. and makes an angle of 30° with the H.P. and passing through the point on the axis. Draw the sectional F.V., T.V. and the true shape of a section.

Scanned by CamScanner

20. A pentagonal prism of side of base 50 mm and length of axis 100 mm has a rectangular surface on the axis is parallel to the V.P. It is cut by the vertical section plane, the H.T. of which makes an angle of 30° with the XY and bisects the axis of a prism. Draw the sectional F.V., T.V. and the true shape of a section.

Hexagonal Prism

21. A hexagonal prism side of base 30 mm and length of axis 80 mm is resting on the rectangular face in the H.P. with the axis inclined to the V.P. at 40°. It is cut by the vertical section plane whose H.T. passes through the point on the axis 20 mm from one end and inclined at 10° to the V.P. Draw the T.V., sectional F.V. and the true shape of a section.
22. A hexagonal prism side of base 30 mm and length of axis 60 mm long has a central circular hole of 35 mm diameter such that the axis of a hole coincides with that of a prism. The prism is lying on a rectangular face on the ground and the axis is inclined at 45° to the V.P. A cutting plane perpendicular to the V.P. and inclined at 30° to the H.P. cuts the prism passing through a point on the axis 25 mm from the nearer end. Draw two views of the cut prism and show the true shape of a section.
23. A hexagonal prism edge of base 30 mm. length of axis 75 mm rests on one of its rectangular face and the axis is inclined at 60° to the V.P. A cutting plane perpendicular to the V.P. and inclined at 45° to the H.P. cuts the prism at the point on the axis 30 mm from the nearer end. Draw the F.V., sectional T.V. and the true shape of a section.
24. A hexagonal prism 25 mm side of base and axis 75 mm rests with one of its rectangular face on the H.P. and the axis being parallel to the V.P. It is cut by the vertical section plane, the H.T. of which makes an angle of 45° with the XY line and cuts the axis at a point 22 mm from one of its ends. Draw the sectional F.V. and an auxiliary view showing the true shape of a section.
25. A hexagonal prism of 30 mm edge of base and 70 mm length of axis stands on one edge of base on the H.P. while the axis is inclined at 60° to the H.P. and parallel to the V.P. A cutting plane perpendicular to the H.P. and inclined at 45° to the V.P. cuts the prism at the point on the axis 30 mm from the upper end. Draw the sectional F.V., T.V. and the true shape of a section.
26. A hexagonal prism, side of base 30 mm and height 75 mm has an axial square through the hole of sides 20 mm exactly in the centre of the hexagonal faces such that two of the rectangular faces of a square hole make equal inclinations with one of the rectangular face of a prism. The prism rests such that the two rectangular faces of a square hole and the two rectangular faces of a prism make equal inclinations with the V.P. It is cut by the secton plane inclined at 45° to the H.P. and passes through the mid-point of the axis. Draw the sectional T.V. and an auxiliary sectional top view on the auxiliary inclined plane sloping at 30° to the H.P. Add the true shape.
27. A hexagonal prism of 35 mm side of base and 70 mm axis is resting on one of its side of base on the H.P., such that the axis is parallel to the V.P. and inclined to the H.P. at 30°. It is cut by an inclined plane inclined at an angle of 45° to the H.P., perpendicular to the V.P. and passes at a distance of 25 mm above the base along the axis. Draw the F.V., sectional T.V. and the true shape of a section.

Triangular Pyramid

28. A triangular pyramid having base 50 mm side and axis 70 mm long is lying on the H.P. on one of its triangular faces with the axis being parallel to the V.P. A section plane parallel to the V.P., cuts the pyramid at a distance of 10 mm from the axis. Draw the sectional F.V. and the T.V.
29. A triangular pyramid of 40 mm side of base and axis 60 mm long rests with one of the base edges on the H.P. such that the base is inclined at 60° to the H.P. and the axis is parallel to the V.P. A section plane perpendicular to the H.P. and inclined at 40° to the V.P. bisects the axis of a pyramid. Draw the sectional view and the true shape of a section.

Scanned by CamScanner

Tetrahedron

30. A tetrahedron of 60 mm edge is resting on its base with one of the edge perpendicular to the V.P. It is cut by an inclined section plane such that the true shape of a section is an isosceles triangle of 50 mm base and 40 mm altitude. Find the inclination of the section plane and draw the true shape of a section.

31. A tetrahedron of 50 mm edge has a triangular face in the V.P. with an edge of that face parallel and nearer to the H.P. A cutting plane perpendicular to the H.P. and at 45^0 to the V.P. cuts the pyramid through the mid-point of an axis. Draw the three views and the true shape of a section.

Square Pyramid

32. A square pyramid of 60 mm edge of base stands on its base with all the edges of base equally inclined to the V.P. A section plane perpendicular to the V.P. and inclined to the H.P. cuts the pyramid in such a way that the true shape of a section is an isosceles triangle of 50 mm base and maximum height of 70 mm. Draw the F.V., sectional T.V. and the true shape of a section.

33. A square pyramid of 40 mm side of base and 60 mm axis is resting on its base on the H.P., such that its edges of the base are equally inclined to the V.P. It is cut by the section plane perpendicular to the V.P., inclined to the H.P. at 45^0 and bisecting the axis. Draw the projections and the true shape of a section.

34. A square pyramid of side of base and 40 mm and height 80 mm stands on its base with the sides of base inclined at 45^0 to the V.P. It is cut by the plane equally inclined to both the H.P. and the V.P., passing through the mid-point of its axis. If the traces of the cutting plane are parallel to both the H.P. and the V.P., draw the sectional views and the true shape of a section.

35. A right square pyramid of 40 mm side square base and axis 100 mm long is resting on the H.P. on one of its longer edge such that the sides of the base are equally inclined to the H.P. and the axis is parallel to the V.P. It is cut by a vertical section plane parallel to the axis and at a distance of 10 mm in front of it. Draw the T.V. and the sectional F.V.

Pentagonal Pyramid

36. A pentagonal pyramid of 30 mm side of base and axis 60 mm long is resting on one of its triangular face with the axis parallel to the V.P. It is cut by the section plane perpendicular to the H.P. and inclined at 30^0 to the V.P. bisecting the axis. Draw the plan, sectional front view and the true shape of a section.

37. A pentagonal pyramid, having an edge of base 30 mm and axis 60 mm long is resting on one of its triangular faces on the ground with its axis parallel to the V.P. A cutting plane perpendicular to the V.P. and inclined at 30^0 to the H.P. cuts the pyramid and passes through the mid-point of the axis. Draw the T.V., F.V. and the true shape of a section.

38. A pentagonal pyramid, side of base 40 mm, axis 75 mm long rests vertically on the H.P., with one of its inclined edges parallel to the V.P. It is cut by the section plane perpendicular to the V.P., inclined at 45^0 to the H.P. bisects the axis. Draw the sectional T.V., sectional side view and the true shape of a section.

39. A pentagonal pyramid, side of base 40 mm, length of axis 70 mm is standing on its base with a side of base parallel to the V.P. A section plane perpendicular to the H.P. and inclined at 60^0 to the V.P. cuts the pyramid at 8 mm away from the axis of a pyramid. Draw the projections and show the true shape of a section.

40. A pentagonal pyramid, edge of base 30 mm, length of axis 70 mm has one of its triangular faces in the V.P. and the axis is parallel to the H.P. A cutting plane perpendicular to the V.P. inclined at 30^0 to the H.P. cuts the pyramid bisecting the axis. Draw the F.V., sectional T.V. and the true shape of a section.

Scanned by CamScanner

41. A pentagonal pyramid side of base 40 mm and axis 80 mm is resting on the H.P. on one of its base corner with the base making an angle of 45° to the H.P. and the two base edges containing that corner equally inclined to the H.P. It is cut by the section plane such that the H.T. and the V.T. of it are perpendicular to the *XY* line and passes through the corner on which the solid rests. Draw the F.V., sectional T.V. and the true shape of a section.

42. A pentagonal pyramid of 30 mm side of base and 70 mm axis is resting on one of its side of base on the ground, such that the axis is parallel to the V.P. and inclined to the H.P. at 30°. It is cut by the vertical section plane, which is inclined to the V.P. at 45° and bisects the axis. Draw the sectional F.V., T.V. and the true shape of a section.

43. A pentagonal pyramid has its edge of base 30 mm long and the slant edges are 75 mm long. The pyramid is kept on its base with an edge of base parallel to the V.P. and nearer to the observer. A cutting plane inclined at 45° to the H.P. and perpendicular to the V.P. cuts the pyramid on the left at a point 30 mm from the top on the axis. Another cutting plane perpendicular to the first cuts the pyramid at a point on the axis 30 mm from the base and is on the right of the axis. Draw the sectional T.V., F.V. and the true shape of the section.

44. A pentagonal pyramid 30 mm side of base and height 70 mm rests on one of its base corners on the H.P. such that two of the base edges passing through the corner on which it rests are equally inclined to the H.P. The axis of a pyramid is horizontal and inclined at 30° to the V.P. A section plane perpendicular to the H.P. and parallel to the V.P. bisects the axis of a pyramid. Draw the sectional front view of a pyramid with the apex portion being removed.

45. A pentagonal pyramid 30 mm side of base and 70 mm axis length has one of its slant edge on the H.P. with the axis parallel to the V.P. A vertical section plane whose H.T. bisects the axis and makes an angle of 30° with the *XY* line cuts the pyramid. Draw the sectional F.V., T.V. and the true shape of a section.

Hexagonal Pyramid

46. A hexagonal pyramid of 30 mm side of base and 70 mm height is resting on its triangular face, its axis being parallel to the V.P. It is cut by the section plane inclined at 45° to the V.P. and bisecting the axis. Draw the sectional elevation, plan and the true shape of a section.

47. A regular hexagonal pyramid, base 35 mm side and axis 80 mm long is resting on its base on the H.P. with the two opposite slant edges parallel to the V.P. It is cut by the section plane perpendicular to the V.P. inclined at 45° to the H.P. and intersecting the axis at a point 30 mm above the base. Draw the F.V., sectional T.V. and the true shape of a section.

48. A hexagonal pyramid, side of base 25 mm, length of an axis 65 mm, has a side of base on the ground, perpendicular to the V.P. and the base is inclined at 45° to the ground. A plane inclined at 45° to the V.P. and perpendicular to the H.P. cuts the pyramid bisecting its axis. Draw the sectional F.V., T.V. and the true shape of a section.

49. A right regular hexagonal pyramid, with an edge of base 40 mm and height 100 mm stands with its base on the H.P. with two of its base edges parallel to the V.P. It is cut by the plane passing through the point on the axis 50 mm from the base and inclined at 20 to the horizontal plane. The horizontal trace of this cutting plane is parallel to the V.P. Project the sectional view and the true shape of a section.

50. A hexagonal pyramid of 35 mm side of base and 65 mm axis length rests on its base on the ground with one of its side of base perpendicular to the V.P. It is cut by an inclined plane whose H.T. makes an angle of 30° with *XY* and is 8 mm away from (in front of the) the axis of pyramid. Draw the sectional side view and the true shape of a section.

51. A hexagonal pyramid of edge of base 25 mm and height 50 mm is placed centrally over a top flat circular disc of 70 mm diameter and thickness 20 mm such that two of the base edges make equal inclinations with the V.P. A section plane inclined at 60° to the H.P. passes through the mid-point of the axis of the hexagonal pyramid. Draw the sectional top view and the true shape of a section.

Scanned by CamScanner

52. A regular hexagonal pyramid, having an edge of base 50 mm and length of an axis 70 mm is standing on the base edge on the H.P. with the triangular face containing that edge perpendicular to both the H.P. and the V.P. A horizontal section plane cuts the solid at a height 40 mm above the H.P. Draw the sectional T.V., F.V. and end view.

53. A hexagonal pyramid of 30 mm side of base and height 70 mm rests on one of its corners on the H.P. so that the pair of a parallel base edges are perpendicular to the H.P. and the axis is parallel to the V.P. A section plane perpendicular to the H.P. and inclined at 45° to the V.P. passes through the rear vertical base edge of a pyramid. Draw the sectional F.V. and profile views. Also draw the true shape of the section.

54. A hexagonal pyramid, base 30 mm side and axis 60 mm is placed with one of its slant edges on the H.P. and axis parallel to the V.P. The two triangular faces containing the slant edge on which the pyramid rests are equally inclined to the H.P. The V.T. of the horizontal section plane bisects the axis of a pyramid. Draw the sectional T.V.

Cone

55. A cone, diameter of base 50 mm, length of axis 70 mm is standing on its base on the H.P. A section plane perpendicular to the H.P. and inclined at 60° to the V.P., cuts the cone and is 10 mm away from the axis. Draw the sectional F.V., T.V. and the true shape of a section.

56. A cone, base 60 mm diameter and axis 80 mm long is resting on its base on the ground. It is cut by a section plane perpendicular to the V.P. and parallel to the H.P. and 15 mm away from one of its end generator. Draw its F.V., sectional T.V., sectional side view and the true shape of a section.

57. A right circular cone, 60 mm of base diameter and 80 mm in altitude is resting with its base on the H.P. and it is cut by a plane parallel to one of its generators bisecting the axis. Draw the true shape of a section. Name the curve obtained.

58. A cone, diameter of base 75 mm and axis 90 mm long is held with its axis parallel to the V.P. and inclined at 60° to the ground. It is cut by a plane perpendicular to both the H.P. and the V.P., which passes through a point on the axis 50 mm from the base. Draw three views of the cut cone.

59. A cone of 60 mm base diameter and 70 mm axis is lying on oe of its generators on the ground. It is cut by a section plane perpendicular to the H.P. inclined to the V.P. at 30° and cuts the axis at 20 mm from the base. Draw the sectional F.V., T.V. and the true shape of a section.

60. A cone, diameter of base 50 mm and axis 60 mm long is resting on its base on the H.P. It is cut by a sectional plane perpendicular to both the reference planes in such a way that the true shape of a section is the rectangle hyperbola having 40 mm base. Draw the F.V., T.V. and the sectional side view.

61. A cone, 70 mm diameter and axis 60 mm has its base on the H.P. It is cut by a section plane perpendicular to the V.P., inclined to the H.P. at 60° and passing through its apex. Draw the F.V., sectional T.V. and the true shape of a section.

62. A cone of 70 mm diameter and 90 mm axis length is lying on one of its generator in the V.P. with the axis parallel to the H.P. It is cut by an inclined plane inclined at an angle of 30° to the V.P. and perpendicular to the H.P. and passes at a distance of 30 mm above the base along the axis, so that the apex is retained. Draw the sectional F.V., T.V. and the true shape of a section. *(June '88, M.U.)*

63. A vertical cone diameter of base 60 mm and axis 70 mm long is resting on its base on the H.P. It is cut by a sectional plane so that the true shape of the section is an isosceles triangle with the vertex angle 36°. Set the cutting plane and find its inclination with the H.P. Draw the elevation, Sectional plan and the true shape of a section.

Scanned by CamScanner

64. A cone of 60 mm diameter of base stands with its base on the H.P. It is cut by a section plane perpendicular to the V.P. and inclined to the H.P. in such a way that the true shape of the section is an equilateral triangle of 50 mm sides. Draw the F.V., sectional T.V. and the true shape of a section. State the inclination of the cutting plane with the H.P. and the V.P.

65. A cone, base 40 mm diameter and axis 90 mm long is resting on its base on ground. It is cut by a section plane perpendicular to the V.P. and parallel to one of its end generator 10 mm away. Draw the F.V., sectional T.V., sectional side view and the true shape of a section.

66. A cone of base diameter 80 mm and height 90 mm is resting on its base on the H.P. It is cut by a plane inclined to the H.P. and perpendicular to the V.P. such that the true shape of the section is an isosceles triangle of base 60 mm. Draw the F.V., sectional T.V. and sectional side view. Measure the inclination of the cutting plane with the H.P. *(Dec. '91, M.U.)*

67. A cone of 55 mm diameter and 70 mm, length of axis has one of its generators in the V.P. and parallel to the H.P. The cone is cut by a plane inclined at 45° to the H.P. bisecting the axis. If the apex is retained, draw the F.V., sectional T.V. and the true shape of a section.

68. A cone of 70 mm diameter of base and 60 mm length of axis stands on its base on the H.P. it is cut by an A.I.P. so that the true shape of a section is an isosceles triangle with the vertex angle of 50°. Set the required cutting plane and draw the F.V., sectional T.V. and the true shape of a section.

69. A frustum of a cone base 75 mm diameter, top 50 mm diameter and axis 75 mm long, has a hole of 30 mm diameter drilled centrally through its flat faces. It is resting on its base on the ground and is cut by a section plane perpendicular to the H.P., the V.T. of which makes an angle of 60° to the *XY* and bisects the axis. Draw the F.V., sectional T.V. and the true shape of a section. *(Dec. '88, M.U.)*

70. A right circular cone 60 mm diameter of base and 100 mm high has one of its generator on the H.P. and its axis parallel to the V.P. An auxiliary plane normal to the V.P. cuts the cone, its V.T. making an angle of 45 with the H.P. and intersecting the axis of the cone at a distance 20 mm from the vertex. Draw the sectional T.V. and the true shape of a section.

71. A frustum of a cone, top diameter 60 mm, base diameter 80 mm and height 80 mm has a coaxial through hole of 40 mm diameter. It is cut by a section plane, when placed with base on the H.P., such that the V.T. inclined at 45° passes through the mid-point of the axis of the frustum. Draw the sectional T.V. and the true shape of a section.

Cylinder

72. A right cylinder 50 mm diameter and 70 mm long is resting on its base on the H.P. It is cut by a section plane perpendicular to the V.P. and 30° to the H.P. and it passes through a point on the axis 20 mm from the top. Draw F.V. , sectional S.V., sectional T.V. and the true shape of a section.

73. A cylinder of 50 mm diameter and 70 mm height is resting on the ground on the rim of its circular base in such a way that its axis which is parallel to the V.P. is inclined at 30° to the H.P. It is cut by a plane at 90° to the H.P. and at 45° to the V.P. bisecting the axis. Draw to full scale sectional F.V., T.V. and the true shape of a section.

74. A cylinder of 50 mm diameter of base and 75 mm length of axis has one of its ends on the H.P. It is cut by an A.I.P. in such a way that the true shape of the section is an ellipse of largest possible major axis. Draw the sectional plan, true shape of a section and find the inclination of the section plane with the H.P.

75. A right circular cylinder, base 60 mm diameter and axis 100 mm long, has a square hole of 30 mm side cut through it centrally, the axis of the hole coincides with that of the cylinder. The cylinder is kept lying on the H.P. on a generator with its axis inclined at 30° to the V.P. and faces

Scanned by CamScanner

of the hole equally inclined to the H.P. It is cut by a vertical section plane, the H.T. of which is parallel to the *XY* line, passing through a point on the axis and 20 mm from one end. Draw its T.V. and sectional F.V., retaining the major portion of the solid.

76. A cylinder of 50 mm diameter and 80 mm axis length is lying on one of its generators on the ground so that the axis is parallel to both the reference planes. It is cut by an inclined plane inclined to the V.P. , perpendicular to the H.P., so that the true shape of the section is an ellipse having major axis 70 mm. Draw the sectional F.V., T.V. and the true shape of a section. Also find the inclination of the cutting plane with the V.P.

77. A cylinder of base diameter 70 mm and height 10 mm is lying on the ground with its axis parallel to the V.P. and perpendicular to the H.P. The cylinder contains a hexagonal hole which is cut through the bottom flat face of the cylinder such that the axis of the hole coincides with the axis of the cylinder. The sides of a hexagonal hole are 20 mm and two of its base edges are perpendicular to the V.P. It is cut by a section plane, the vertical trace of which makes an angle of 60^0 to the *XY* line and passing through the axis at a point 30 mm above the bottom base. Draw the F.V. , sectional T.V. and the true shape of a section, if the depth of the hexagonal hole is 50 mm.

78. A cylindrical plastic bucket of height 40 cm and diameter of base 20 cm contains certain quantity of water. The water from the bucket is about to come out when the bucket is tilted about the base rim through an angle of 45^0. Draw the top view and front view of this inclined bucket and also the true shape of the free surface of the water which is about to come out from it. (Use suitable scale)

Critical Problems

1. A square prism edge of base 40 mm has one of the lateral edge in H.P. perpendicular to V.P. and rectangular faces are equally inclined to H.P. It is cut by section plane perpendicular to H.P., inclined to V.P. such that true shape of section is irregular hexagon having two opposite parallel sides equal to 40 mm and remaining four sides equal to 50 mm. Draw the projection with sectional view.

2. A pentagonal prism with 50 mm edge of base and 80 mm length of axis rests on one of its longer edge in H.P. 40 mm infront of V.P. and adjacent longer edge in V.P. and 30 mm above H.P. Both these longer edges are parallel to both reference planes. It is cut be section plane perpendicular to H.P. inclined at 30^0 to V.P. and bisecting the axis of prism. Draw sectional F.V., T.V. and the true shape of a section.

3. A hexagonal pyramid of 30 mm side of base and axis length 75 mm rests on one of its corner such that base of pyramid is perpendicular to both reference planes and two base edges through corner in H.P. are equally inclined to H.P. A cutting plane perpendicular to H.P. and inclined at 45^0 to V.P. contains one of base edge of pyramid. Draw the sectional F.V., T.V. and section profile view considering apex part is removed.

4. A pentagonal prism with edge of base 50 mm axis height 80 mm has one of its base edge in H.P. and base inclined at 60^0 to H.P. It is cut by an auxiliary inclined plane (A.I.P.) so that the true shape of section is an equilateral triangle of maximum possible size. Draw the projection with section.

5. A hexagonal pyramid with edge of base 40 mm axis 80 mm long is resting on one of edge of base in H.P., perpendicular to V.P. and triangular face contained by edge of base in H.P. inclined at 45^0 to H.P. A section plane perpendicular to V.P. inclined to H.P. cut the solid in such a way so that true shape of section in a trapezium with two parallel sides equal to 25 mm and 80 mm. Draw the F.V., sectional T.V. and sectional side view.

6. For essential problem number 1 and 2 draw the projection of retained portion of solid such that its cut surface is kept on H.P. and axis is parallel to V.P.

Scanned by CamScanner

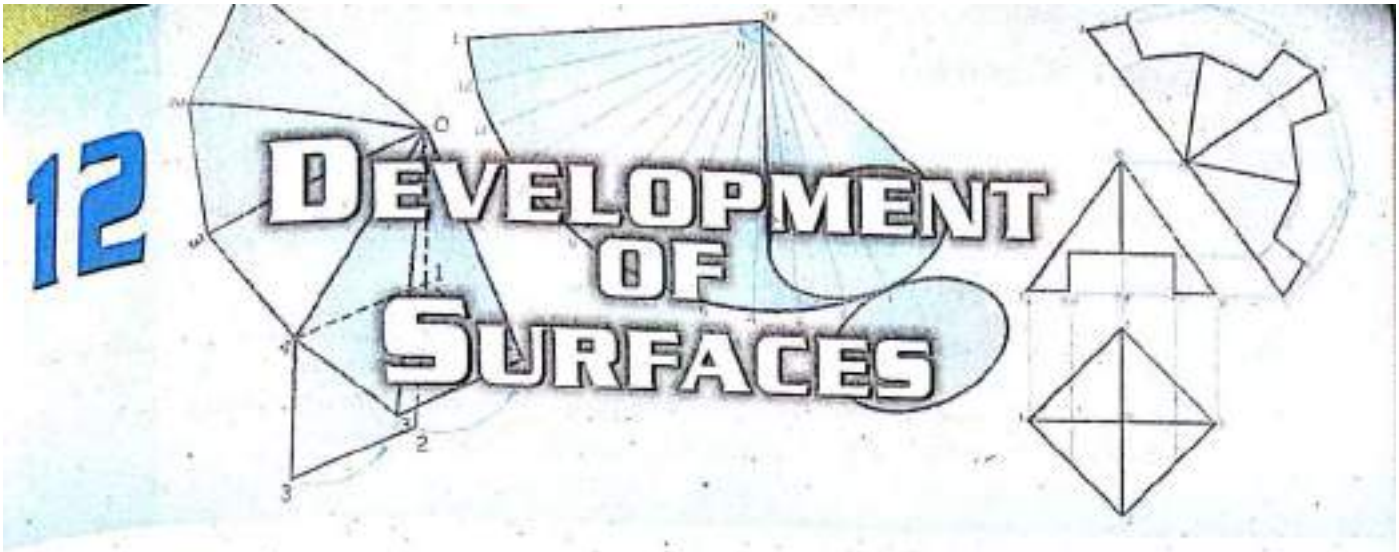

12 DEVELOPMENT OF SURFACES

12.1 Introduction

When the surface of solid is considered to be completely opened out and laid on a plane, then surface is said to be developed and such a shape and size, which can be folded or formed to make the required object is called the ***Development of Surface****. It can also be stated as a process of unfolding all the surfaces of an object.*

12.2 Application of Development of Surfaces in Engineering Products

Sheet metal working is based on the knowledge of development of surfaces. Products like tanks, boiler's, funnels, hopper's, bins, airconditioning ducts, aeroplane parts, ship parts, chimneys etc. are made from flat sheets of metal. The metal sheets are cut as per the size required and is fabricated into the desired shapes.

Before fabrication it is necessary to mark the flat sheet as per the knowledge of development and manufacturing is carried by any means, i.e. folding, forming, bending, rolling, welding, revetting etc.

In these chapter discussion of the principle of developing geometrical solids (i.e. Prism, Cylinder, Pyramid, Cone, etc) by different methods are dealt. So one can utilise the knowlegde of the development to fabricate the sheet metal object.

12.3 Methods of Development

12.3.1 Parallel Line Method

If stretch out lines principle is used in case of prism and cylinder, we get the development of surfaces by parallel line method because the vertical edges of prism and generators of cylinder are parallel to each other.

Scanned by CamScanner

12.3.2 Radial Line Method

If stretch out lines principle is used in case of pyramid and cone, we get the development of surfaces by radial method because the slant edges of pyramid and generators of cone are uniform in true length and radiates from apex in each case.

Note : *In this chapter we are emphasizing on development of lateral surface and all the solutions of problems are shown by development of lateral surfaces only. If however total development of surfaces is required, it can be easily obtained by adding the development of base to development of lateral surface.*

12.4 Concept of Points and Lines

Line *AB* is inclined to all principal planes.

Its three views are known i.e. *a' b'* (F.V.); *a b* (T.V.) and *a" b"* (S.V.) Point *P* lies on line *AB*. If one view of point *P* is known then other two views can be projected very easily as shown in *figure 12.1*.

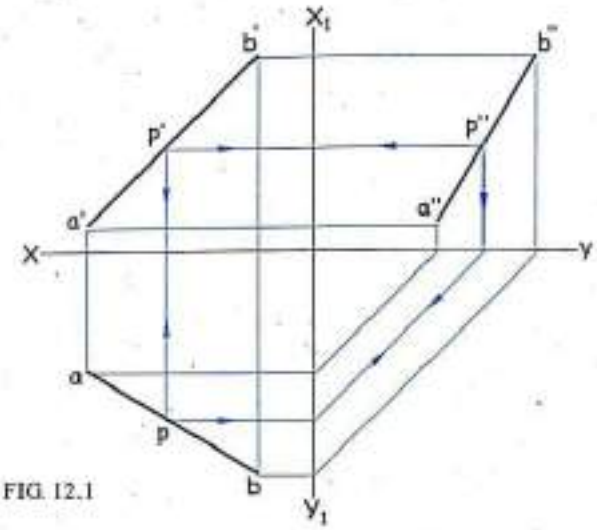

FIG. 12.1

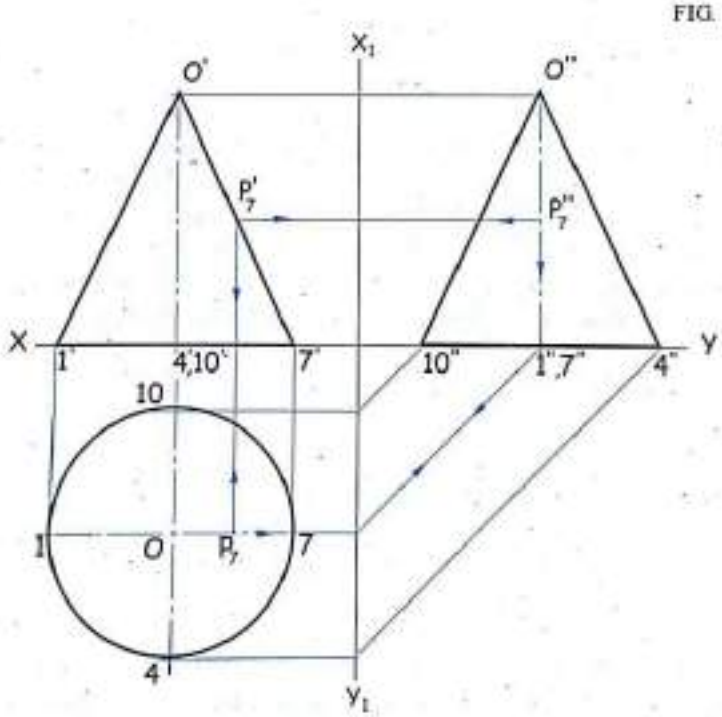

FIG. 12.2

Figure 12.2 shows how to locate the point on generators which can be considered as a lines on the surface of the cone.

Let *O-7* be one of the end generator of cone and its three views are *O'-7'* (F.V.), *O-7* (T.V.) and *O"-7"* (S.V.). Point P_7 lies on generator *O-7*. If one view of point P_7 is known then other two views can easily be projected as shown in *figure 12.2*.

Scanned by CamScanner

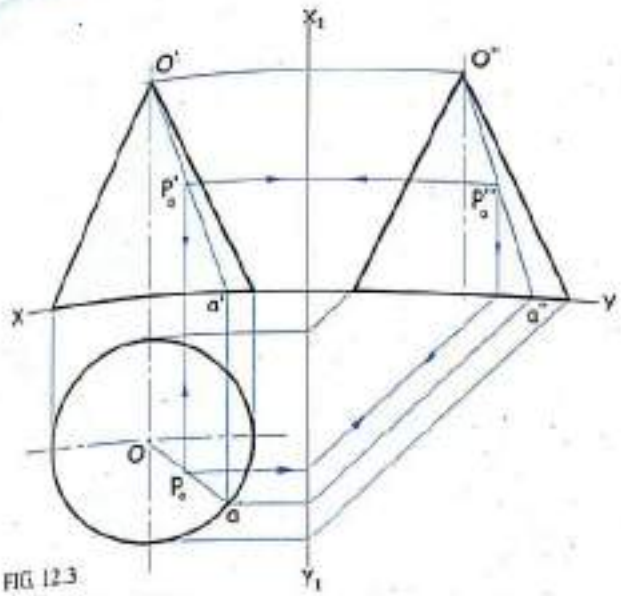

FIG. 12.3

Let *O-A* be the one of the end generator of cone and its three views are *o'-a'* (F.V.), *o-a* (T.V.) and *o"-a"* (S.V.). Point P_A lies on generator *O-A*. If one view of point P_A is known then other two views can easily be projected as shown in *figure 12.3*.

Note : *If any point lies on a generator whose views are in same line (collinear) then transfer the point to one of the end generator and obtain (In F.V. transfer with horizontal projector and in T.V. transfer by rotating with apex as centre).*

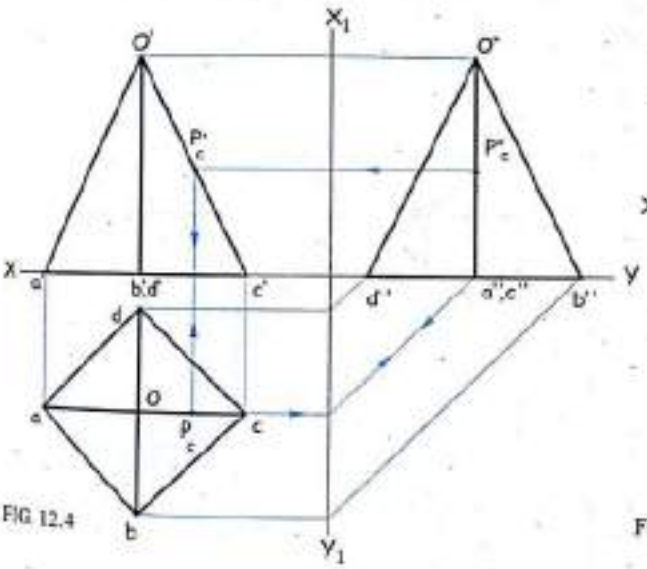

FIG. 12.4

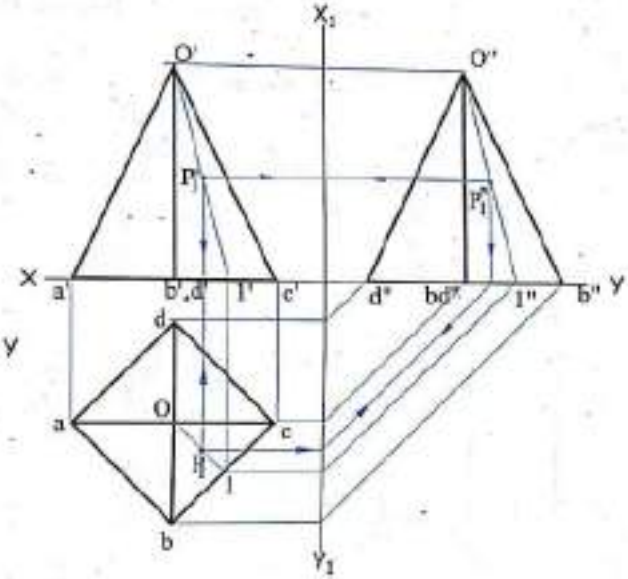

FIG. 12.5

Figure 12.4 shows how to locate point on slant edge which can be considered as a line.

Let *O-C* be one of the slant edge of pyramid and its three views are *o'-c'* (F.V.), *o-c* (T.V.) and *o"c"* (S.V.). Point P_C lies on slant edge *O-C*. If one view of P_C is known then other two views can easily be projected as shown in *figure 12.4*.

Let *O-1* be the slant line drawn from apex to the base of pyramid and its three view are *O'-1'* (F.V.), *O-1* (T.V) and *O"-1"* (S.V.) point P_1 lies on slant line *O-1*. If one view point P_1 is known then other two view can easily be projected as shown in *figure 12.5*.

Scanned by CamScanner

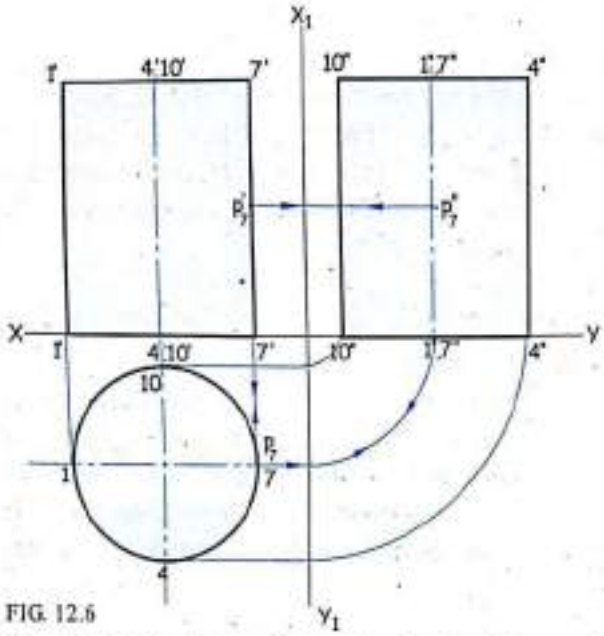

FIG. 12.6

Figure 12.6 shows how to locate the point on generator which can be considered as a line on the surface of cylinder..

Let *7-7* be the one of the end generator of cylinder and its three views are *7'-7'* (F.V.), *7-7* (T.V.) and *7"-7"* (S.V.). Point P_7 lies on generator *7-7*. If one view of P_7 is known then other two views can be projected easily as shown in *figure 12.6*.

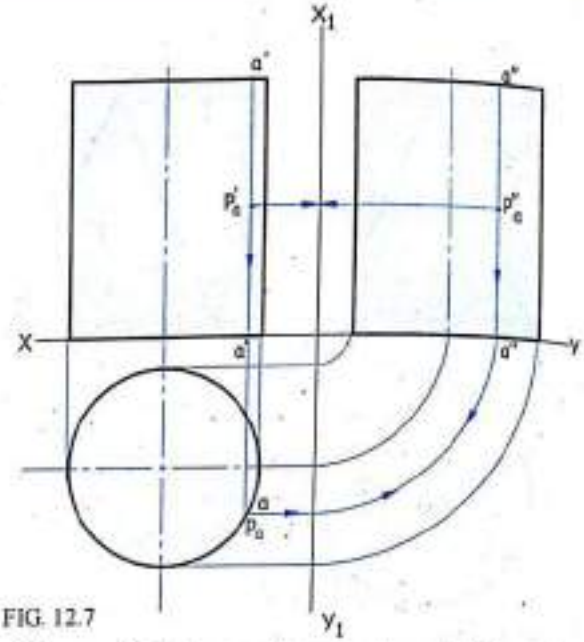

FIG. 12.7

Figure 12.7 shows how to locate the point on generator *A-A* by similar procedure i.e. *a'-a'* (F.V.) carries p'_a, *a-a* (T.V.) carries p_a and *a"-a"* (S.V.) carries p''_a.

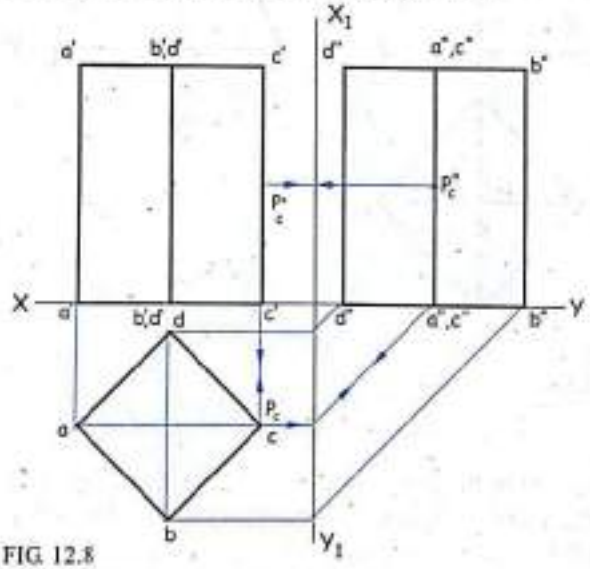

FIG. 12.8

Figure 12.8 shows how to locate point on vertical edge of prism which can be considered as a line. Let *c-c* be one of the vertical edge of the prism and its three views are *c'-c'* (F.V.), *c-c* (T.V.) and *c"-c"* (S.V.). Point P_C lies on vertical edge *c-c*. If one view of the point P_C is known then other views can easily be projected as shown in *figure 12.8*.

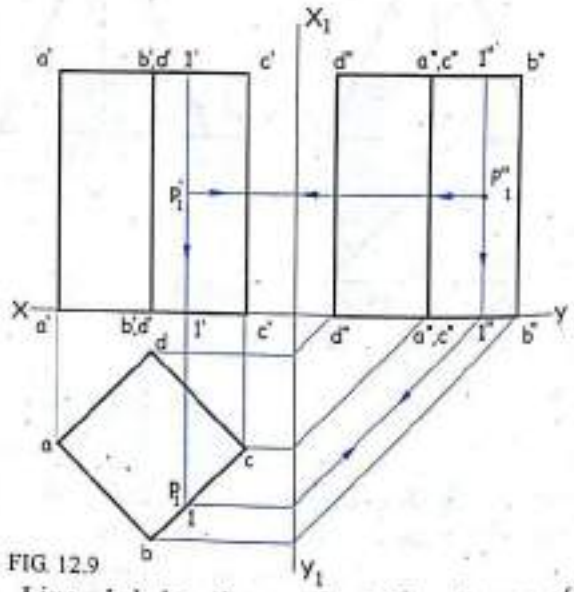

FIG. 12.9

Line *1-1* be the vertical line drawn of vertical rectangle face of prism and its three views are *1'-1'* (F.V.), *1-1* (T.V.) and *1"-1"* (S.V.). Point P_1 lies on vertical line *1-1*. If one view of point P_1 is known then other views can easily be projected as shown in *figure 12.9*.

Scanned by CamScanner

12.5 Development of Prisms

If a square prism with axis height H and edge of base E is rolled for one complete revolution on a plane, it moves distance equal to perimeter of its base polygon and area covered by it will be equal to its development of lateral surface, which is equal to four times the area of a rectangular face of the square prism. *Refer figure 12.10.*

Therefore, development of lateral surface of a prism is obtained by placing a number of rectangular face one adjacent to the other, equal to the number of edges of base. Hence the development of lateral surface of prism is represented as

Rectangle of size = Height × Perimeter of base

$= H \times L$

$= H \times n \times E$

where H = Height of prism

n = Number of edges of base

L = Perimeter of base

E = Length of the edge of base

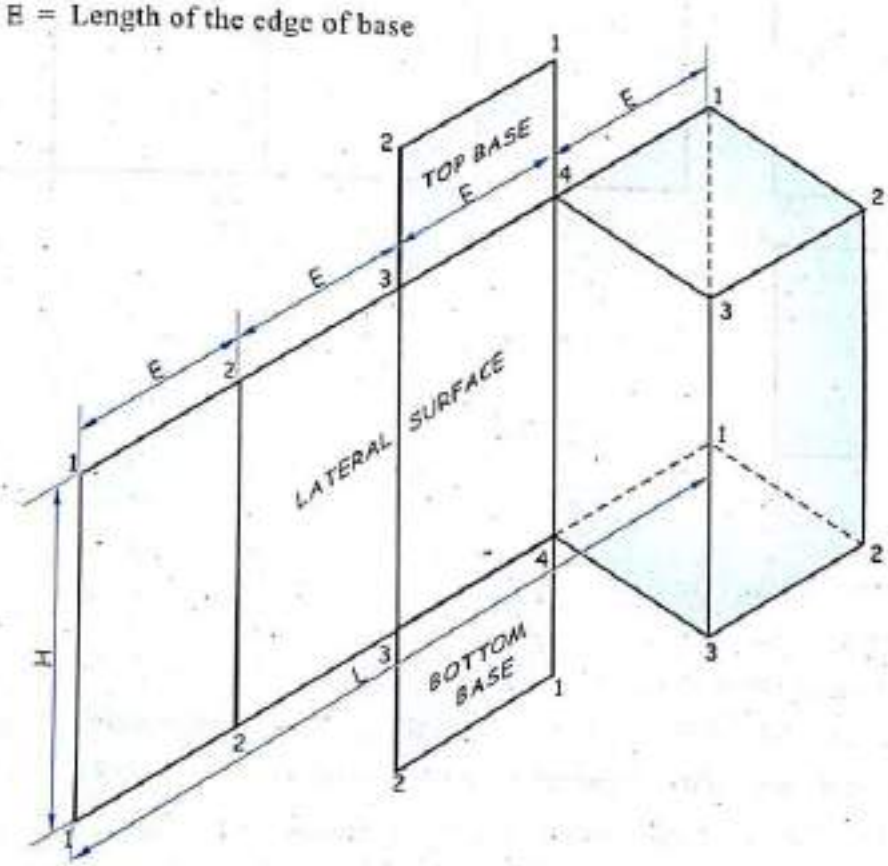

FIG. 12.10 : Development of Square Prism

Lateral development of prism consist 'n' number of equal rectangles in contact. Each having base 'E' and height 'H'.

Note : Convention followed in this chapter, is to draw thick object line for all vertical edges inside the development of lateral surface to indicate the effect of fold marks.

Scanned by CamScanner

Problem 1

A regular square prism with edge of base (E) 25 mm and axis height (H) 50 mm is resting on base with axis perpendicular to H.P. and two edges of base parallel to V.P. is to be wrapped by paper. Show the development of lateral surface with fold mark on paper.

Solution

Refer figure 12.11.

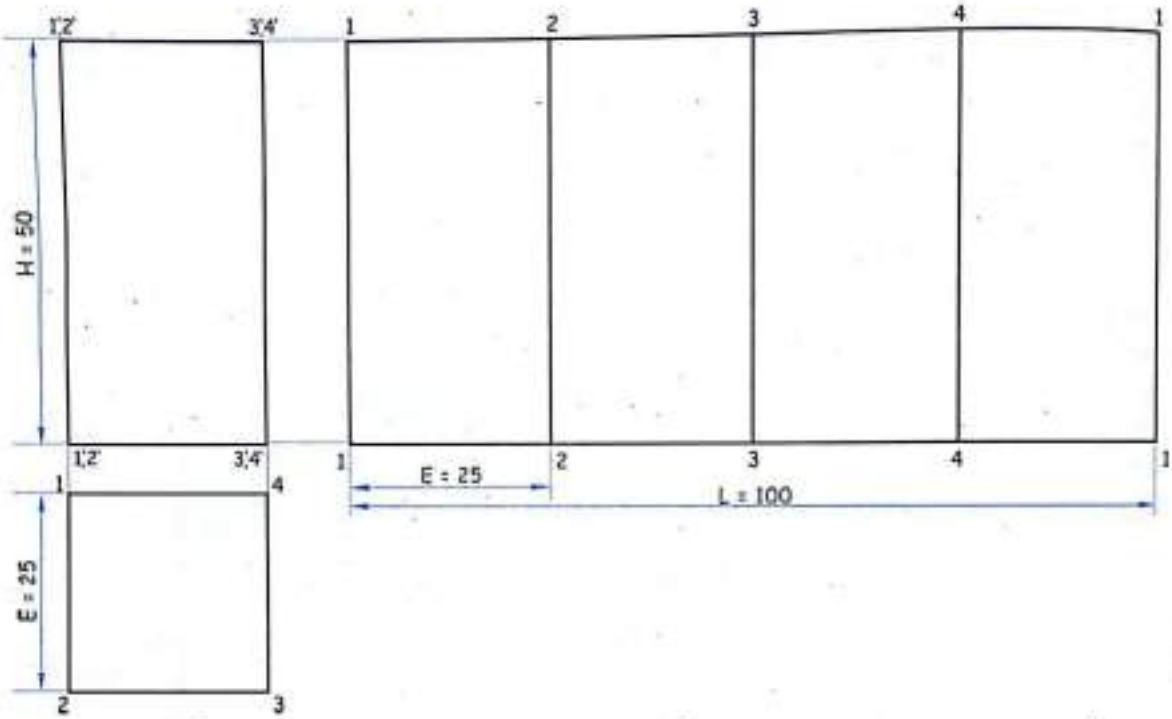

FIG. 12.11

1. Draw T.V. and project the F.V.
2. Name the points as shown.

(i) Name the corners of prism as *1, 2, 3, 4* in T.V.

(ii) Name the vertical edges of F.V. as *1' - 1', 2' - 2', 3' - 3', 4' - 4'* respectively.

(iii) Name the vertical edges of development of lateral surface as *1 - 1, 2 - 2, 3 - 3, 4 - 4.*

3. Draw a stretch out line *1 - 1* equal to the length of perimeter (L) of square base for Development of Lateral Surface (D.L.S.) directly in the line with the base of the F.V.,

   i.e. $L = E \times 4 = 25 \times 4 = 100.$

4. Divide the length *1 - 1* in four equal parts.
5. Draw four equal rectangles in contact, each representing the rectangular face of prism.

Scanned by CamScanner

Problem 2

A hexagonal prism side of base 40 mm, axis height 90 mm has its two sides of base parallel to V.P. A section plane, cut the prism such that section plane passes through extreme left bottom corner to extreme right top corner of prism. Show the development of lateral surface of half cut prism.

Solution

Refer figure 12.12.

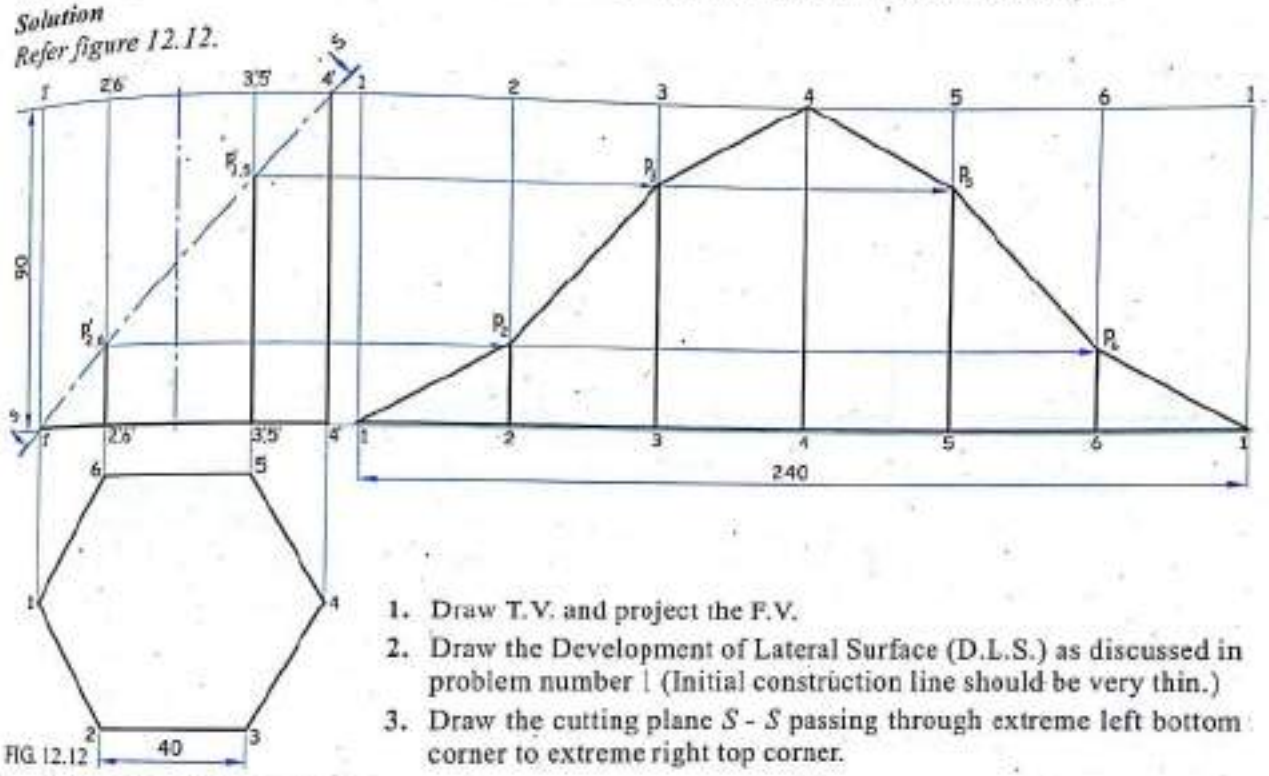

FIG. 12.12

1. Draw T.V. and project the F.V.
2. Draw the Development of Lateral Surface (D.L.S.) as discussed in problem number 1 (Initial construction line should be very thin.)
3. Draw the cutting plane S - S passing through extreme left bottom corner to extreme right top corner.
4. Name the points as shown.

(i) Name the corners of prism as *1, 2, 3, 4* in T.V. which represents corners of top base as well as of bottom base.

(ii) Name the vertical edges of F.V. as $1'$ - $1'$, $2'$ - $2'$, $3'$ - $3'$, $4'$ - $4'$, $5'$ - $5'$, $6'$ - $6'$ respectively.

(iii) Name the vertical edges of development of lateral surface as *1 - 1, 2 - 2, 3 - 3, 4 - 4, 5 -5, 6 - 6.*

(iv) Name the point of intersection (common point) of cutting plane S - S and vertical edges in F. V. as p'_1, p'_2, p'_3, p'_4, p'_5, p'_6 respectively. The cutting plane S - S cuts the vertical edges $1'$ - $1'$ at p'_1 ; $2'$ - $2'$ at p'_2 ; $3'$ - $3'$ at p'_3 and $4'$ - $4'$ at p'_4 $5'$ - $5'$ at p'_5 $6'$ - $6'$ at p'_6 (Vertical edge $1'$ - $1'$ will carry p'_1 ; $2'$ - $2'$ will carry p'_2 , ...so on).

(v) Project p'_1, p'_2, p'_3, p'_4 p'_5 p'_6 horizontally and name the point of intersection as p_1, p_2, p_3, p_4, p_5, p_6 on respective vertical edges of D.L.S.

5. Join all the points in proper sequence by straight line.

Since prism is bounded by rectangular plane surface therefore join all the points in sequence by straight line.

Note :

1. *Convention followed in this chapter is to draw the thick object lines for the retained part and thin construction lines for the removed part of D.L.S. of solid.*
2. *Effect of cutting plane S - S is not shown in T.V. (which is already discussed very clearly in Chapter-6, Sections of Solids) knowingly because here we are emphasizing only on D.L.S.*

Scanned by CamScanner

Problem 3

A vertical square prism base 50 mm and 100 mm axis length has its faces equally inclined to V.P. A square hole of sides 35 mm is drilled through the prism completely such that the axis of hole is perpendicular to V.P., parallel to H.P. and bisects the axis of vertical square prism. The sides of square hole are equally inclined to H.P. Draw the development of lateral surface (D.L.S.) with effect of hole.

Solution : *Refer figure 12.13.*

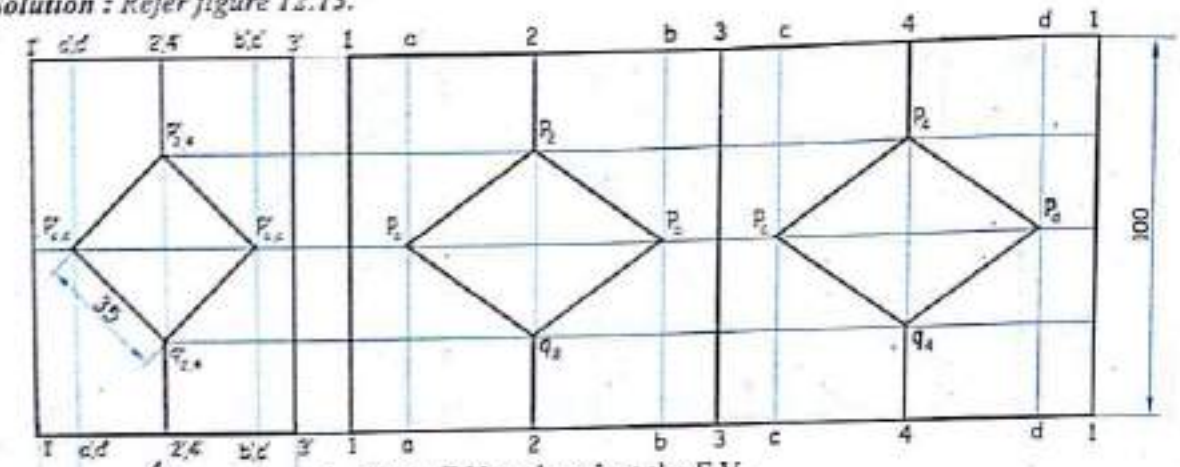

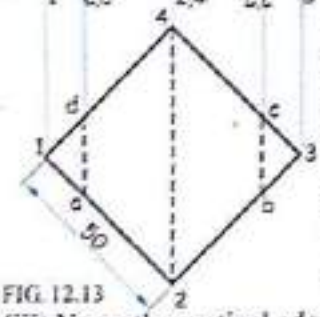

FIG. 12.13

1. Draw T.V. and project the F.V.
2. Draw the development of lateral surface (D.L.S.) by usual method.
3. Draw the square hole centrally in F.V. with sides equally inclined to H.P.
4. Construct the **vertical lines* passing through corners of square hole considering it as a ***key points*.
5. Name the points as shown.

(i) Name the corners of prism as *1, 2, 3, 4* in T.V.

(ii) Name the vertical edges of F.V. as *1'-1', 2'- 2', 3'- 3', 4'- 4'* respectively.

(iii) Name the vertical edges of development of lateral surface as *1 - 1, 2 - 2, 3 - 3, 4 - 4*.

(iv) Name the common point of cutting plane (sides of square hole are cutting planes) and vertical edges as p'_2, p'_4, q'_2, q'_4 respectively. (Vertical edge *2' - 2'* and *4' - 4'* are made to cut at two distinct points, upper side and lower side. Let us say $p'_{2,4}$ for upper points and $q'_{2,4}$ for lower points.)

(v) Project p'_2, p'_4, q'_2, q'_4 horizontally and name the point of intersection as p_2, p_4, q_2, q_4 on respective vertical edges of D.L.S.

(vi) Draw the vertical lines through *key points*. These vertical lines points will generate *a, b, c, d* in T.V. and *a' - a', b' - b', c' - c', d' - d'* in F.V.

(vii) With compass transfer the points *a, b, c, d,* of T. V. to the development of lateral surface w.r.t. corners (eg. Take *1-a* distance from T.V. on a compass as a radius and with centre *1*, mark *a* on edge of base *1-2* on D.L.S.)

(viii) Draw vertical lines in D.L.S. through these points (i.e. *a - a, b - b, c - c, d - d*) on D.L.S.

(ix) Name the common point of cutting plane and vertical lines as p'_a, p'_b, p'_c, p'_d in F.V. (Vertical lines *a' - a'* will carry p'_a, *b' - b'* will carry p'_b, *c' - c'* will carry p'_c, and *d' - d'* will carry p_d)

(x) Project p'_a, p'_b, p'_c, p'_d horizontally and name the point of intersection as p_a, p_b, p_c, p_d on respective vertical lines of D.L.S.

6. Join all the points in proper sequence by straight line to complete the development of lateral surface.

***Vertical Lines :** A straight thin line drawn on the rectangular faces in F.V. of prism which is parallel to the axis and perpendicular to the base of prism are termed as vertical lines..

****Key Points :** Corners of square hole are considered to be key points because there is sudden change in direction of cutting plane (i.e. sides of square hole are cutting planes).

Note : *When a through hole is drilled in the vertical prism, it develops two holes on the lateral surfaces of vertical prism such that one of the hole lies on the front two rectangular faces and other on the rear two rectangular faces of vertical prism.*

Scanned by CamScanner

Problem 4

A square prism side of base 44 mm, length of axis 88 mm has its base in H.P. The axis of prism is perpendicular to H.P., parallel to V.P. and sides of base are equally inclined to V.P. A square hole of side 40 mm is punched with its axis perpendicular to V.P. and parallel to H.P. Distance between axis of hole and axis of prism is 8 mm and axis of hole is 44 mm above H.P. Draw development of lateral surface (D.L.S.) . Assume the faces of hole equally inclined to H.P.

Solution

Refer figure 12.14.

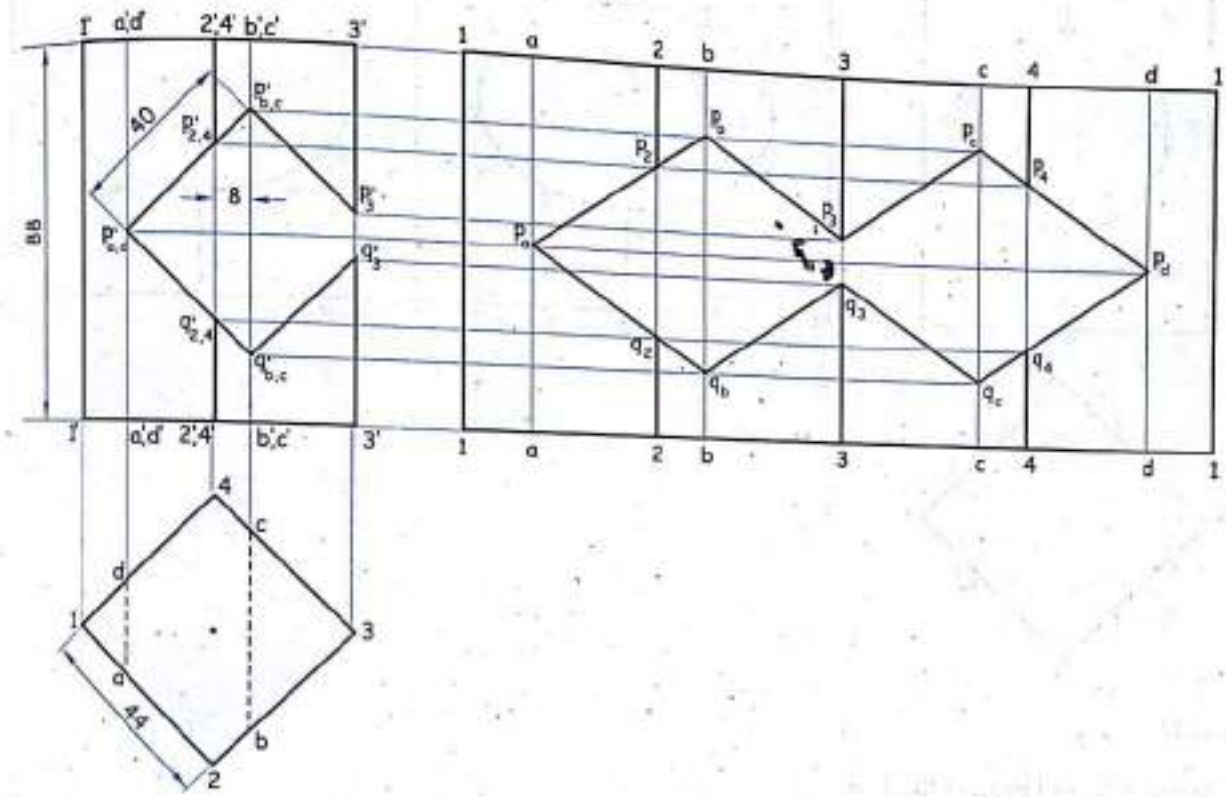

FIG. 12.14

1. Draw T.V. and project the F.V.
2. Draw the development of lateral surface with thin construction line by usual method.
3. Draw the square hole whose centre is 44 mm above H.P. with an offset of 8 mm to the axis of the prism and with sides equally inclined to H.P.
4. Construct the vertical lines passing through corners of square hole considering it as a *key points*.
5. Name the points as discussed in previous problem.
6. Project all the points horizontally and locate on D.L.S.
7. Join all the points in proper sequence by straight line to complete the D.L.S.

Scanned by CamScanner

Problem 5

A square prism side of base 50 mm, axis length 100 mm has its sides of base equally inclined with V.P. A hole of diameter 50 mm is drilled horizontally such that axis of hole is perpendicular to V.P. and parallel to H.P. and bisects the axis of square prism. Draw the D.L.S. showing the effect of hole.

Solution

Refer figure 12.15.

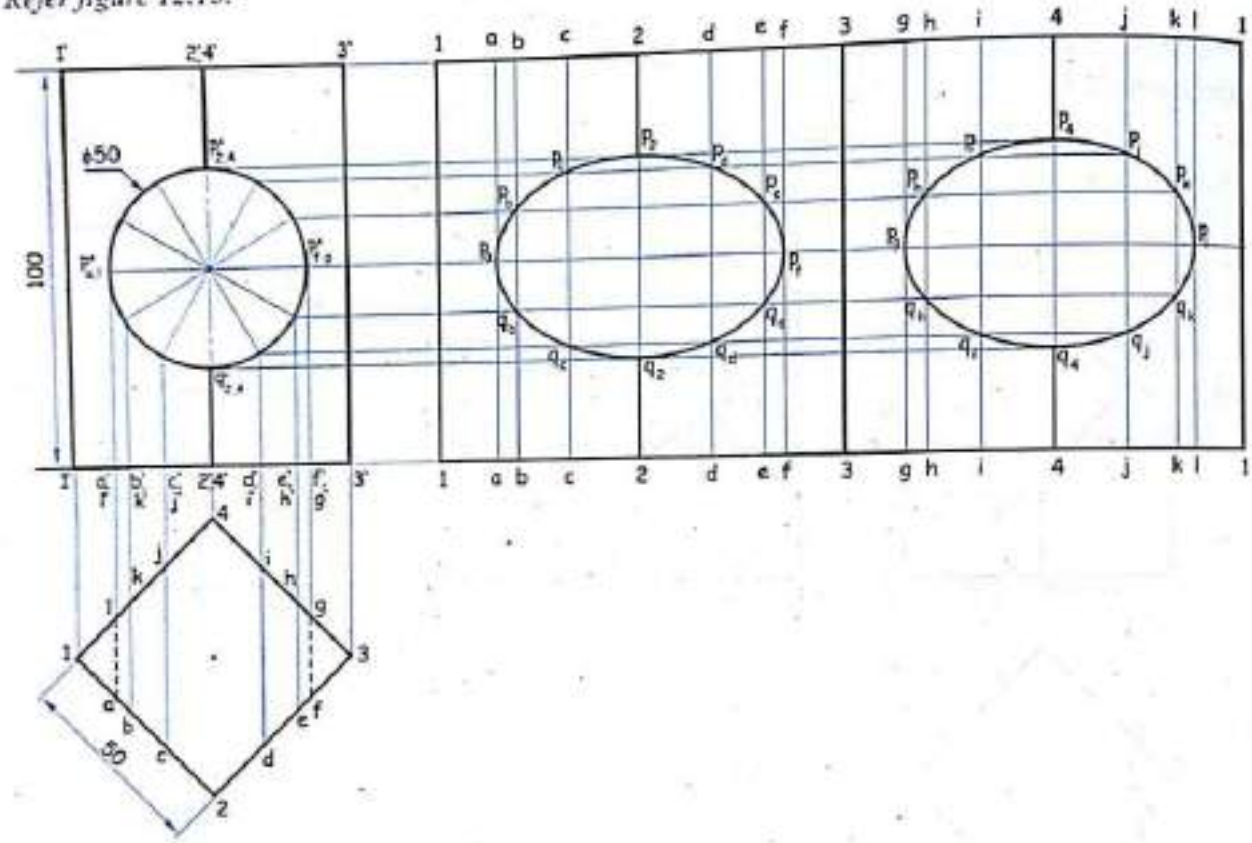

FIG. 12.15

1. Draw T.V. and project the F.V.
2. Draw the D.L.S. with thin construction line by usual method.
3. Draw the circular hole centrally in F.V.
4. Divide the circle into equal parts, say 12.
5. Draw the vertical lines passing through each part.
6. Name the points as shown by usual method.

*7. Join all the points in proper sequence by smooth curve.

Note : Key Points

The diametrical points $p'_{a,l}$, $p'_{f,g}$, $p'_{2,4}$, $q'_{2,4}$ are key points because it decides the extreme ends of the curve.

* Since the cutting plane is a circular hole (curved surface) therefore its D.L.S. will be smooth curve.

Scanned by CamScanner

Problem 6

A square prism, side of base 50 mm and height of axis 100 mm is resting on the H.P on its base with all its rectangular vertical faces equally inclined to V.P. Hole of radius 30 mm is drilled through the prism such that its axis is 50 mm above base, 12 mm eccentric towards right and perpendicular to V.P. Draw the D.L.S. of the prism.

Solution

Refer figure 12.16.

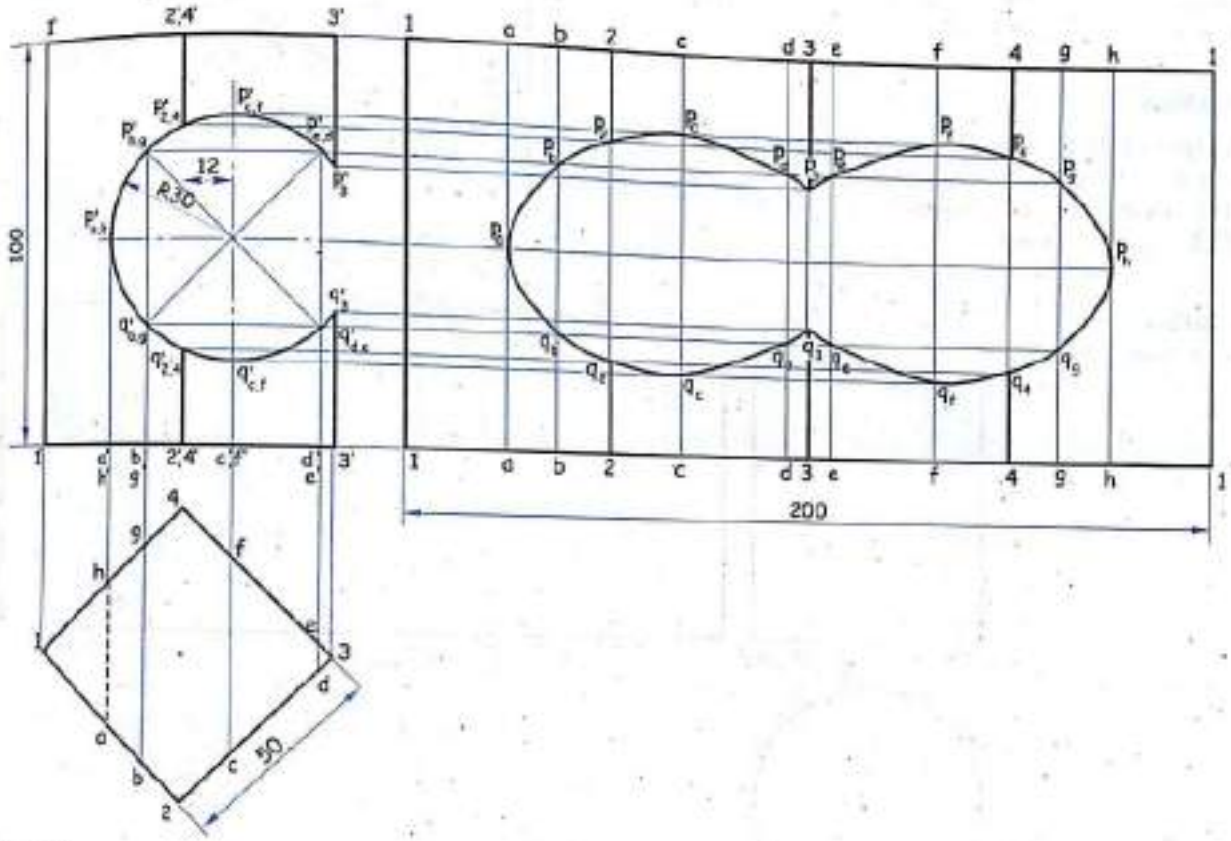

FIG. 12.16

1. Draw T.V. and project the F.V.
2. Draw the D.L.S. with thin construction line by usual method.
3. Locate the centre of hole (50 mm above base and 12 mm towards right) and with radius equal to 30 mm. Draw a circle in F.V.
4. Divide the circle into 8 equal parts.
5. Draw the vertical lines passing through each part.
6. Name the points as shown by usual method.
7. Join all the points in proper sequence by smooth curve.

Scanned by CamScanner

12.6 Development of Cylinder

If cylinder is rolled for one complete revolution on a plane then it moves the distance equal to circumference of its base circle. The area covered by it in one revolution will be equal to its Development of Lateral Surface (D.L.S.) which is a rectangle of sides equal to the circumference (C) of its base circle and the height (H) of the cylinder.

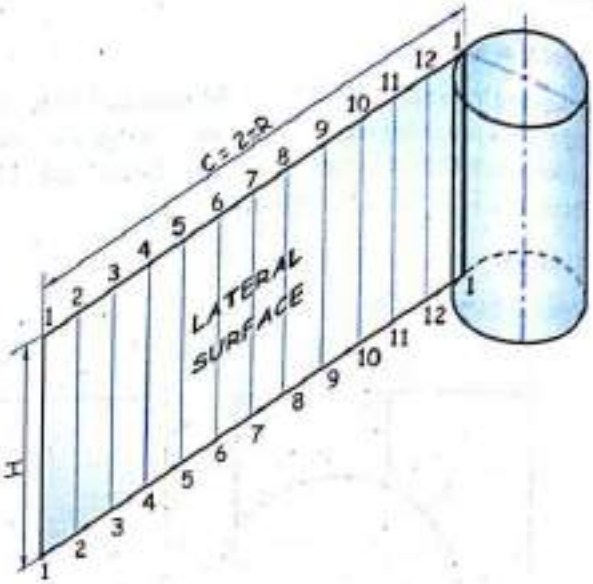

Problem 7

A right circular cylinder of base diameter 50 mm and axis height 70 mm is resting on it's base on H.P. Draw the development of lateral surface (D.L.S.) of cylinder.

Solution

Refer figure 12.17.

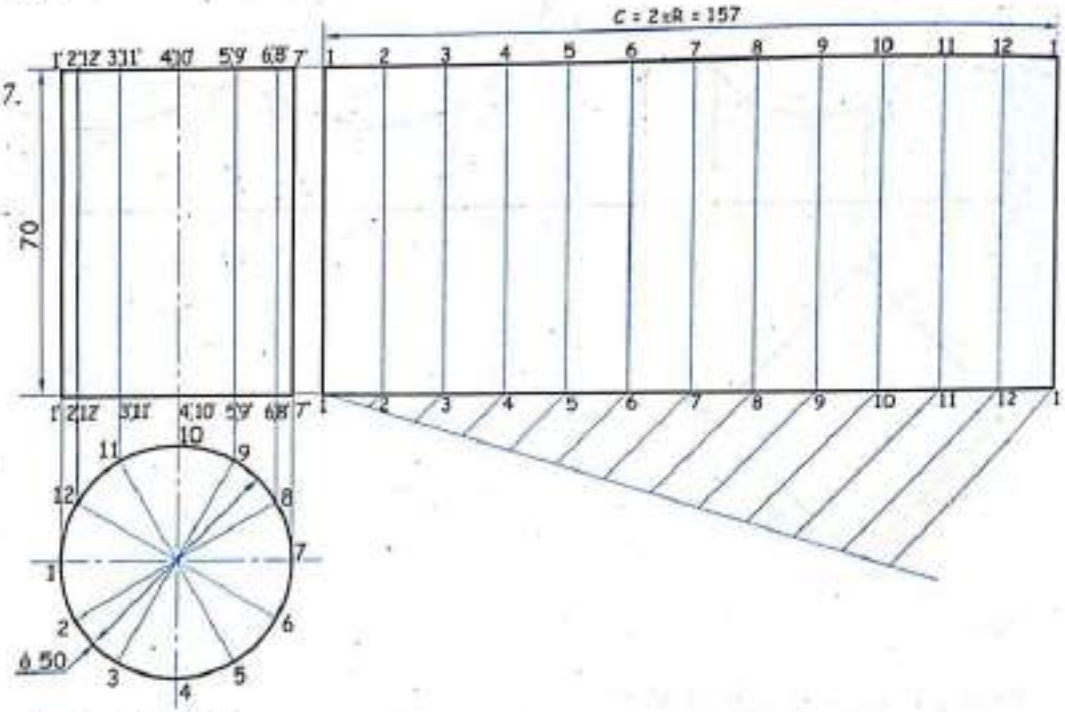

FIG. 12.17

1. Draw T.V. and project the F.V.
2. Name the points as shown.
(i) Name 12 equal division of the circle as *1, 2, 3, 4 . . . 12* in T.V.
(ii) Name the generators of F.V. as *1'-1', 2'-2', 3'-3', . . . 12'-12'* respectively.
(iii) Name the generators of development of lateral surface as *1-1, 2-2, 3-3, . . . 12-12.*
3. Draw stretch out line *1-1* equal to the length of circumference of base of circle for D.L.S. directly in the line with the base of the F.V. i.e. $C = 2\pi R$.
4. Draw a rectangle of size $C \times H$ as D.L.S.
5. Divide the length *1-1* and T.V. of cylinder in equal parts say *12*.
6. Project the generator in F.V.

Note : *Generators are drawn by thin lines.*

Scanned by CamScanner

Problem 8

A cylinder of base diameter 40 mm and axis height 60 mm has it's axis perpendicular to H.P. and parallel to V.P. It is cut by a cutting plane perpendicular to V.P. inclined at 45° to H.P. and bisecting the axis of cylinder. Show the development of lateral surface (D.L.S.) of truncated cylinder.

Solution : Refer figure 12.18.

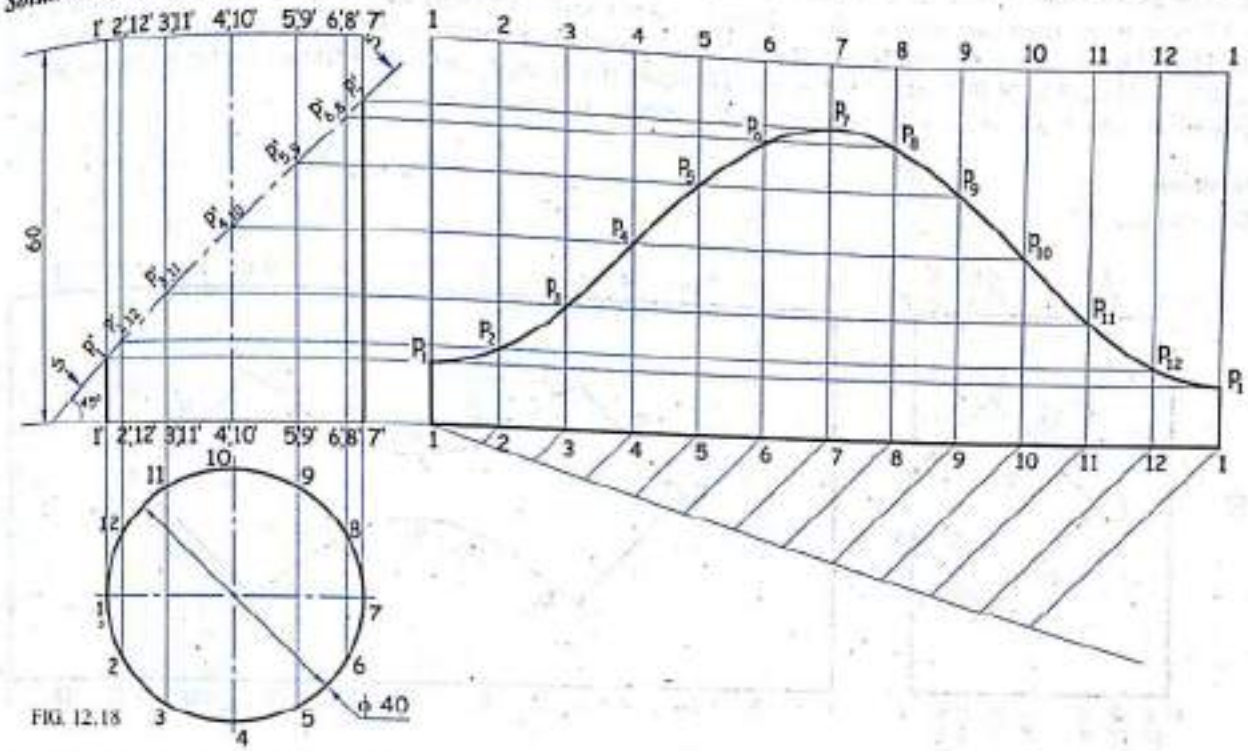

FIG. 12.18

1. Draw T.V. and project the F.V.
2. Draw the development of lateral surface as discussed in problem number 1 (Initial construction line should be very thin.)
3. Draw the cutting plane *S-S* passing through the mid-point of the axis at 45° to the *XY* line.
4. Name the points as shown.

(i) Name the 12 equal division of circle as *1, 2, ... 12* in T.V.

(ii) Name the generators of F.V. as *1' - 1', 2' - 2', ... 12' - 12'* respectively.

(iii) Name the generators of development of lateral surface as *1 - 1, 2 - 2, ... 12 - 12* respectively.

(iv) Name the point of intersection (common point) of cutting plane and generators as in F.V. p'_1, p'_2, p'_3, . . . p'_{12} respectively. The cutting plane *S - S* cuts the generators *1' - 1'* at p'_1 ; *2' - 2'* at p'_2, ... *12' - 12'* at p'_{12} (Generator *1' - 1'* will carry p'_1 ; *2' - 2'* will carry p'_2, ...so on)

(v) Project p'_1, p'_2, p'_3, . . . p'_{12} horizontally and name the point of intersection as p_1, p_2, p_3, . . . p_{12} on respective generator of D.L.S.

5. Join all the points in sequence by smooth curve.

Since cylinder is bounded by curved surface therefore join all the points in sequence by smooth curve.

Note: 1. Convention followed in this chapter is to draw the thick object lines for the retained part and thin construction lines for the removed part of D.L.S. of solid.

2. Effect of cutting plane S-S is not shown in T.V. (which is already discussed very clearly in Chapter- 7, Section of Solid) knowingly because here we are emphasing only on D.L.S.

Scanned by CamScanner

Problem 9

A cylinder of base diameter 60 mm and height 90 mm long is lying on H.P. with its axis parallel to V.P. and perpendicular to H.P. It has a square hole cut through the curved surface of the cylinder such that the axis of the square hole is parallel to H.P. and perpendicular to V.P. The axis of the square hole is 12 mm away from the axis of the cylinder and towards the right of the observer and 45 mm above the H.P. The base edges of the square hole are equal to 36 mm. A flat face of the square hole are equally inclined to H.P. Using 1 : 1 scale. Develop the lateral surface of the cylinder showing square hole on it such that square hole appears on the centre of the D.L.S.

Solution

Refer figure 12.19.

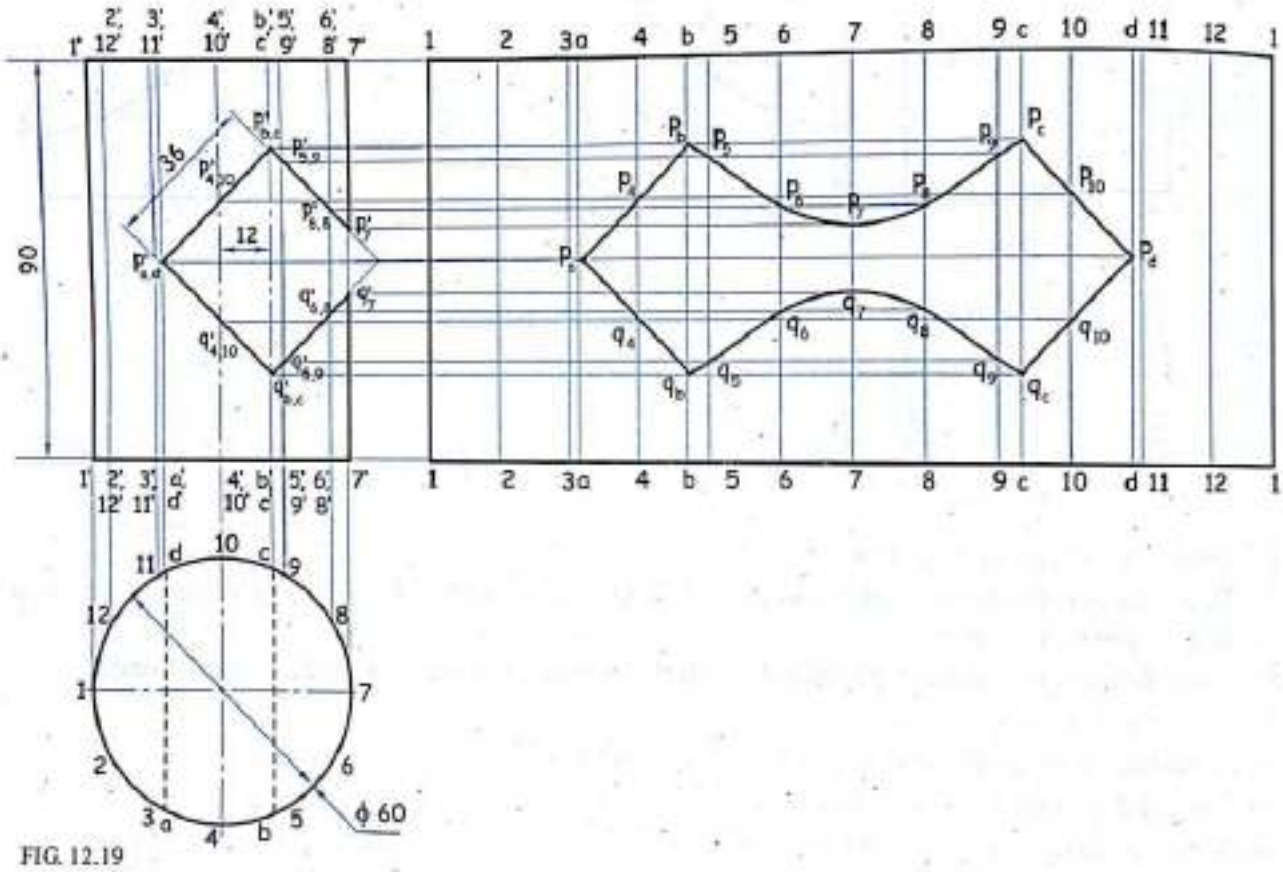

FIG. 12.19

1. Draw T.V. and project the F.V.
2. Draw the development of lateral surface with thin construction line by usual method.
3. Draw the square hole whose centre is 45 mm above H.P. with an offset of 12 mm to the axis of the prism, and with sides equally inclined to H.P.
4. Construct the extra generators passing through corners of square hole considering it as a *key point*.
5. Name the points as discussed in previous problem.
6. Project all the points horizontally and locate on D.L.S.
7. Join all the points in proper sequence by smooth curve to complete the D.L.S.

Scanned by CamScanner

12.7 Development of Pyramid

If pyramid is rolled for one complete revolution on a plane then development of lateral surface consists of 'n' number of isosceles triangles in contact where 'n' is equal to number of edges of base of pyramid. The base of isosceles triangle is equal to the base edge of pyramid and other two sides are equal to the length of slant edges of pyramid.

Refer figure 12.20.

Note : *Convention followed in this chapter is to draw thick object lines for all slant edges inside the D.L.S. to indicate the fold marks.*

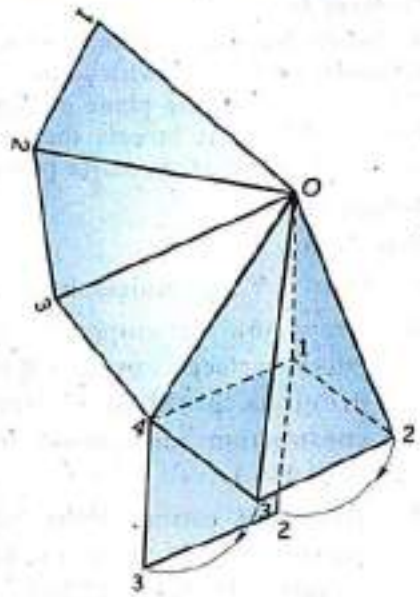

FIG. 12.20 : Development of Pyramid

Problem 10

A square pyramid of 40 mm edge of base and 60 mm axis height has its base in the H.P. with edge of base equally inclined to the V.P. Draw the development of lateral surface (D.L.S.) of the pyramid.

Solution : *Refer figure 12.21.*

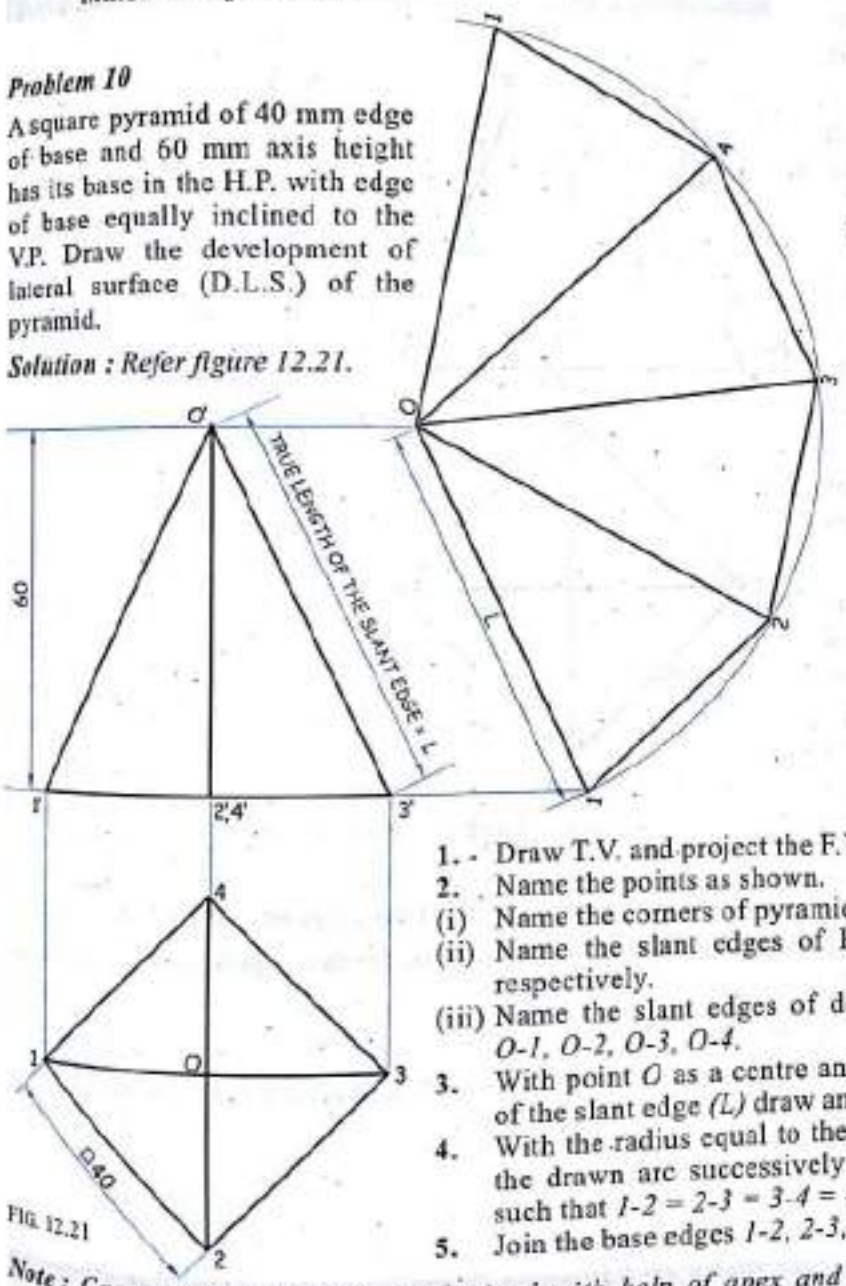

FIG. 12.21

1. Draw T.V. and project the F.V.
2. Name the points as shown.
   (i) Name the corners of pyramid as *1, 2, 3, 4* in T.V.
   (ii) Name the slant edges of F.V. as *O'-1', O'-2', O'-3', O'-4'* respectively.
   (iii) Name the slant edges of development of lateral surface as *O-1, O-2, O-3, O-4.*
3. With point *O* as a centre and radius equal to the true length of the slant edge *(L)* draw an arc of the circle.
4. With the radius equal to the true length of the base edge, cut the drawn arc successively and mark the points *1-2-3-4-1* such that *1-2 = 2-3 = 3-4 = 4-1*
5. Join the base edges *1-2, 2-3, 3-4, 4-1* and *O-1, O-2, O-3, O-4.*

Note : *Construction of D.L.S. is obtained with help of apex and base drawn horizontally at any convenient distance.*

Scanned by CamScanner

Problem 11

A square pyramid 30 mm edge of base, 50 mm axis length rests vertically on its base with adjacent edges of base equally inclined to V.P. It is cut by a cutting plane perpendicular to V.P. and inclined at 45° to H.P., such that it bisects the axis. Draw the development of lateral surface (D.L.S.) of the major part of the pyramid.

Solution

Refer figure 12.22.

1. Draw T.V. and project the F.V.
2. Draw the development of lateral surface as explained in previous problem (Initial construction line should be very thin.)
3. Draw the cutting plane *S-S* passing through the mid-point of axis at 45° to the *XY* line.
4. Name the points as shown.

(i) Name the corners of the pyramid as *1,2,3,4* in T.V.

(ii) Name the slant edges in F.V. as *O'-1'*, *O'-2'*, *O'-3'*, *O'-4'* respectively.

(iii) Name the slant edges of development of lateral surface as *O-1, O-2, O-3, O-4.*

(iv) Name the points of intersection (common points) of cutting plane *S-S* and slant edges as in F.V. p_1', p_2', p_3', p_4' respectively. The cutting plane *S-S* cuts the slant edges *O'-1'* at P_1', *O'-2'* at P_2', *O'-3'* at P_3', *O'-4'* at P_4' (Slant edge *O' - 1'* will carry p_1' ; *O'-2'* will carry p_2', ...)

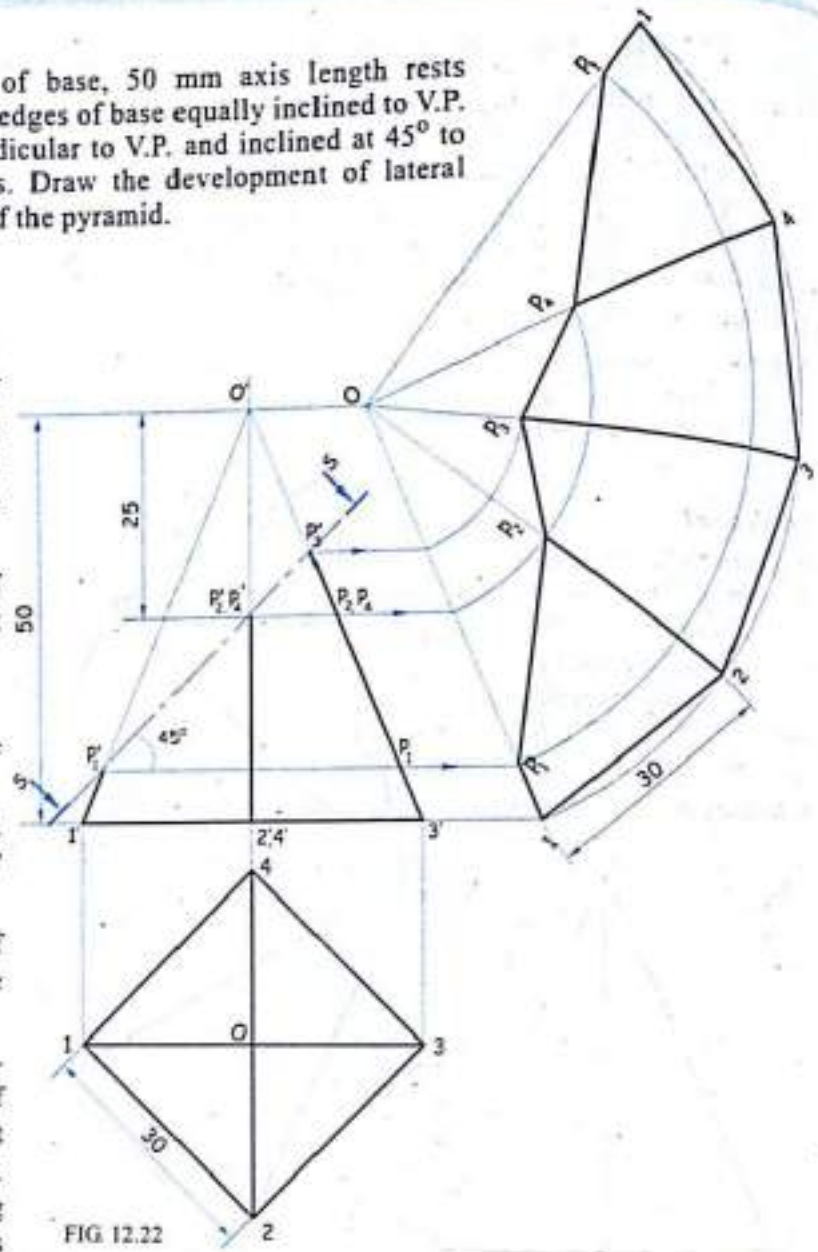

FIG 12.22

(v) Project the points p_1', p_2', p_3', p_4' horizontally on true length of the slant edge of D.L.S.

(vi) With *O* as a centre and corresponding true length as radius, transfer these points as p_1, p_2, p_3, p_4 on respective slant edges of D.L.S..

5. Join all the points in proper sequence by straight line.

Since pyramid is bounded by triangular plane surface therefore join all the points in sequence by straight line.

Note :

1. *Convension followed in this chapter is to draw the thick object lines for the retained part and thin construction lines for the removed part of D.L.S. of solid.*
2. *Effect of cutting plane S-S is not shown in T.V. which is discussed very clearly in Chapter-7 Sections of Solids, knowingly because here we are emphasing only on D.L.S.*

Scanned by CamScanner

Problem 12

A square pyramid of 40 mm side of base and 70 mm height stand with its base in the H.P. Its sides of base are parallel to V.P. An Auxillary Inclined Plane (A.I.P.) cuts the pyramid passing through a point on axis 30 mm from apex and inclined to H.P. at 60°. Draw the D.L.S. of pyramid assuming apex to be removed.

Solution

Refer figure 12.23.

1. Draw T.V. and project the F.V.
2. Draw the D.L.S. by usual method.
3. Name the points as shown.

Construction of True Length of Slant

Since none of the slant edges in the T.V. are horizontal, therefore none of the slant edges in F.V. are in true length.

(i) Rotate O-3 in T.V., to make it horizontal and name it say O-3_1.

(ii) Project the point 3_1 (T.V.) vertically up and mark $3_1'$ (F.V.)

(iii) Join O'-$3_1'$, which determines the true length of slant edge in F.V.

(iv) Transfer the horizontally projected points distance of true length of slant edge from F.V. to D.L.S. as explained in previous problem.

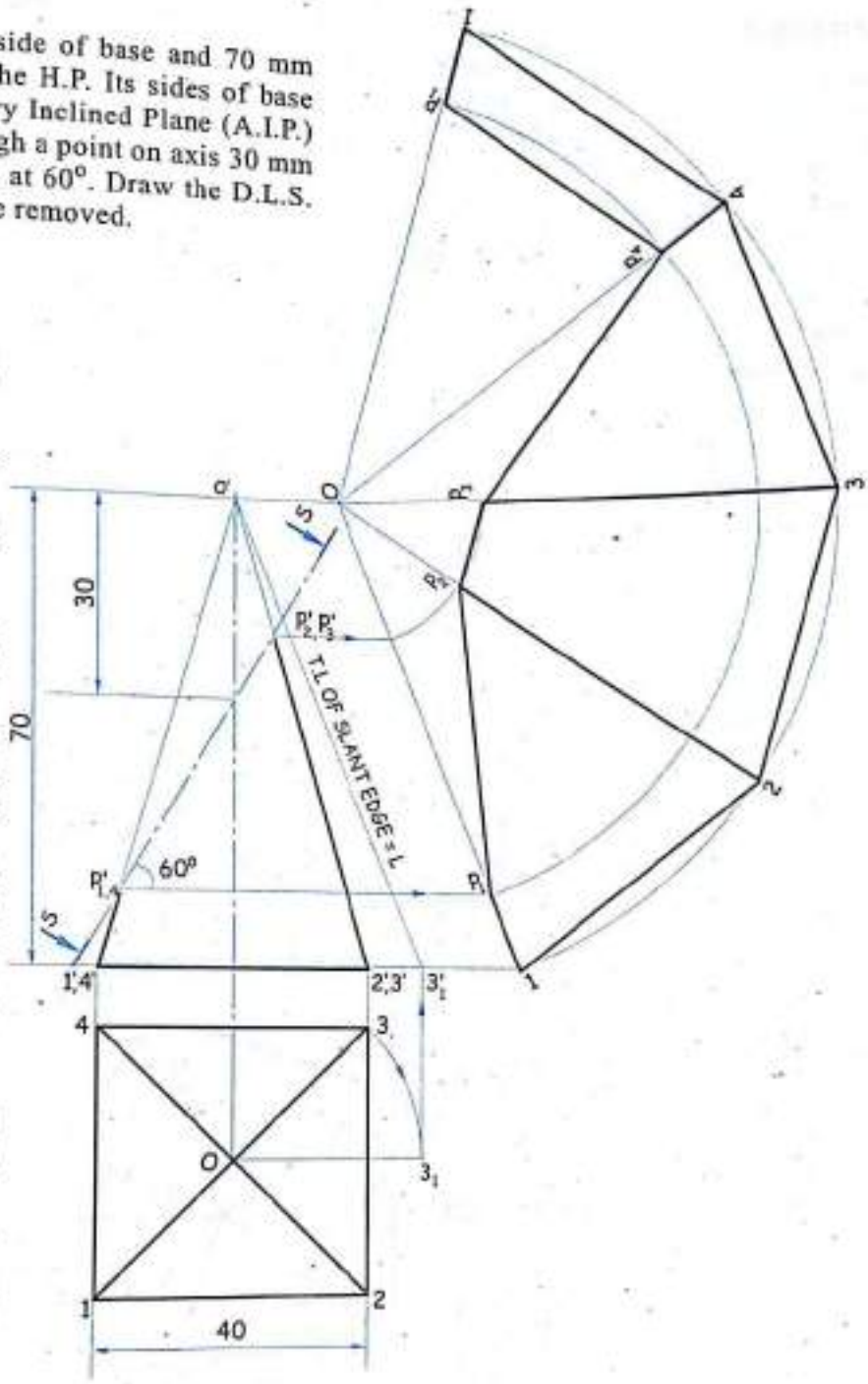

FIG. 12.23

4. Join all the points in proper sequence by straight line.

Note : Convention followed in this chapter is to draw the thick object lines for the retained part and thin construction lines for the removed part of D.L.S. of solid.

Scanned by CamScanner

Problem 13

A pentagonal pyramid, side of the base 40 mm, axis 75 mm long, rests vertically on the H.P. with one of it's inclined edges parallel to the V.P. It is cut by a plane perpendicular to the V.P. and inclined at 45° to the H.P., such that it bisects the axis. Major part of the edge, which is parallel to the V.P. is retained. Draw the development of lateral surface of the remaining portion of the pyramid.

Solution

Refer figure 12.24.

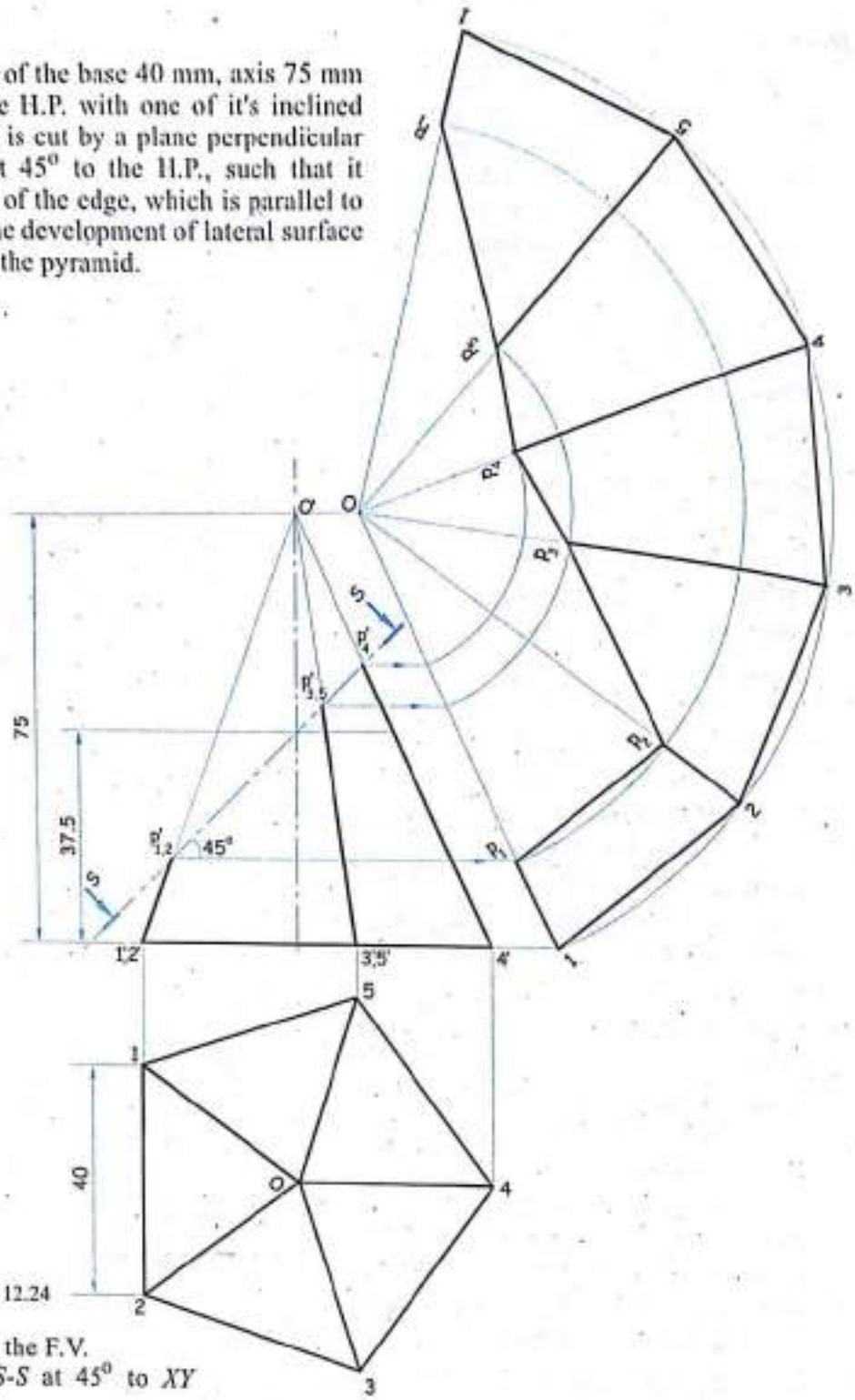

FIG. 12.24

1. Draw T.V. and project the F.V.
2. Draw cutting plane *S-S* at 45° to *XY* and bisecting the axis.
3. Name the points as shown.
4. Mark the points $p'_1, p'_2, p'_3, p'_4, p'_5$ in F.V. on respective slant edges where cutting plane cuts.
5. Transfer these points to true length of slant edge and then carry the same to respective slant edges in D.L.S.
6. Join all the points in proper sequence by straight line in D.L.S.

Scanned by CamScanner

Problem 14

A square pyramid 50 mm side of base axis 60 mm long is resting on its base in the H.P. with sides of base are equally inclined to V.P. A square hole with side 24 mm is drilled through the square pyramid such that its axis intersect the axis of pyramid, 22 mm above the base. The axis of hole is perpendicular to V.P. and parallel to H.P. Assuming the face of square hole to be equally inclined with H.P., draw the D.L.S. of pyramid.

Solution

Refer figure 12.25.

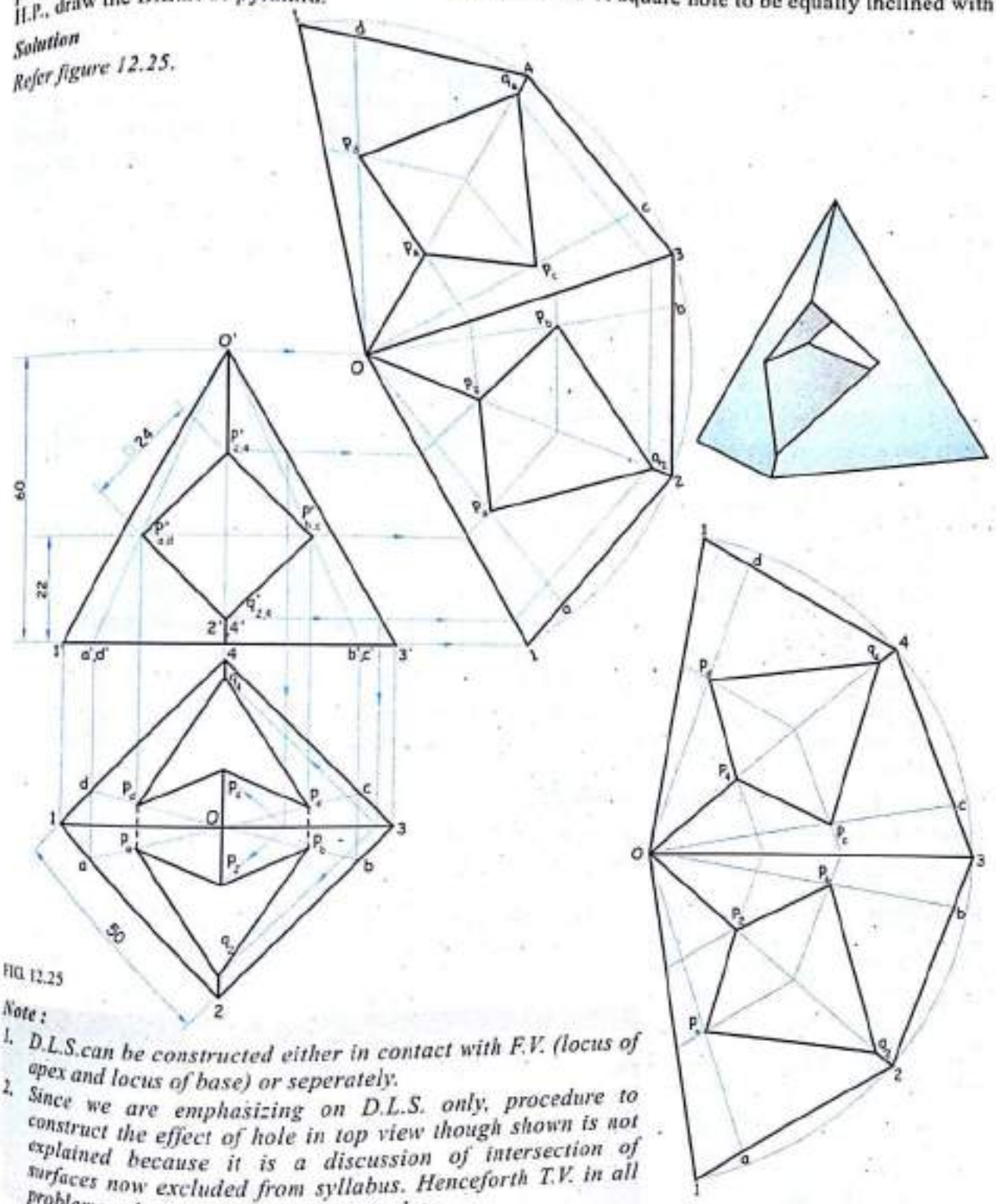

FIG. 12.25

Note :

1. *D.L.S.can be constructed either in contact with F.V. (locus of apex and locus of base) or seperately.*
2. *Since we are emphasizing on D.L.S. only, procedure to construct the effect of hole in top view though shown is not explained because it is a discussion of intersection of surfaces now excluded from syllabus. Henceforth T.V. in all problems solution will be kept incomplete.*

Scanned by CamScanner

1. Draw T.V. and project the F.V.
2. Draw the D.L.S with thin construction line by usual method.
3. Draw the square hole in F.V. with sides equally inclined to H.P.
4. Construct the extra *slant lines* on triangular faces through the corners of square hole considering it as a *key points*.
5. Name the points as shown.

(i) Name the points in T.V., F.V. and D.L.S. as explained previously.

(ii) Name the common point of cutting plane (here sides of square hole are cutting planes) and slant edges as $p'_{2,4}$, $q'_{2,4}$. [Slant edges O'-$2'$ and O'-$4'$ are made to cut at two distinct points on cutting plane (sides of square hole), upper side and lower sides. Let us say $p'_{2,4}$ for upper points and $q'_{2,4}$ for lower points.]

(iii) Project $p'_{2,4}$, $q'_{2,4}$ horizontally on true length of slant edge *(O'-$1'$ or O'-$3'$)*.

(iv) Transfer the horizontally projected points distances of true length of slant edges from F.V. to D.L.S. by usual method.

(v) Draw the slant lines through key points. These slant lines will generate a points *a, b, c, d* in T.V. and O'-a' ; O'-b' ; O'-c' ; O'-d' in F.V.

(vi) Transfer the points *a,b,c,d* of T.V. to the D.L.S. on the corresponding position.

(vii) Draw slant lines in D.L.S. through these points (i.e. *O-a, O-b, O-c, O-d*).

(viii) Name the common point of cutting plane and slant lines as $p'_{a,d}$; $p'_{b,c}$ in F.V. (Slant lines O'-a' will carry p_a', O'-b' will carry p_b', O'-c' will carry p_c', O'-d' will carry p_d').

(ix) Project $p'_{a,d}$, $p'_{b,c}$ horizontally on true length of slant edge.

Transfer the horizontally projected points distance of true length of slant edge from F.V. to D.L.S. as explained below.

To locate P_a, P_b, P_c, P_d on D.L.S. using horizontal cutting plane method.

The given *figure 12.25* shows only one triangular face of D.L.S. of square pyramid which carries the slant line *O-a*. To locate p_a on *O-a*, take *O* as a centre and radius equal to corresponding true length of slant edge of O'-p_a' from F.V. and cut the arc on D.L.S.

Construct the horizontal cutting plane through the common point of arc and slant edge as shown. Name the point of intersection (common point) of horizontal cutting plane and slant line *(O-a)* as p_a on D.L.S.

6. Join the points in sequence by straight line.

Slant Lines : A straight thin lines drawn on the triangular faces in F.V. of pyramid from an apex to the perifery of the base are termed as *Slant Lines*.

Key Points : Corners of square hole are considered to be key points because there is sudden change in the direction of cutting plane (i.e. sides of square hole are cutting plane)

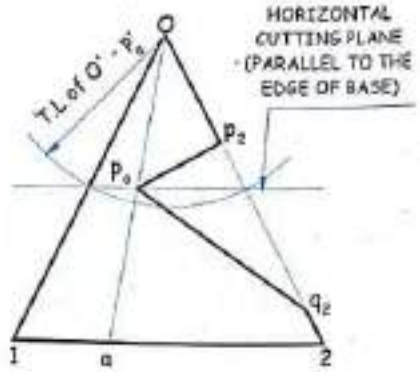

FIG. 12.26

Remark

(i) For locating the point which lies on slant line (i.e. other then slant edge) transfer the point by taking locus of point parallel to respective base edge.

(ii) For locating the point which lies on slant edge transfer the point by taking locus of point parallel to respective base edge or by taking arc of radius equal to corresponding true length on respective slant edge.

Scanned by CamScanner

Problem 15

A square pyramid of 60 mm side of base 80 mm axis length rests vertically on its base with the adjacent edges of the base equally inclined to the V.P. A circular hole of 40 mm diameter is drilled through the pyramid so that the axis is perpendicular to the V.P. and parallel to H.P. The axis of the hole is intersecting the axis of the pyramid at 25 mm above the base. Develop the cuts surface of the pyramid.

Solution

Refer figure 12.27.

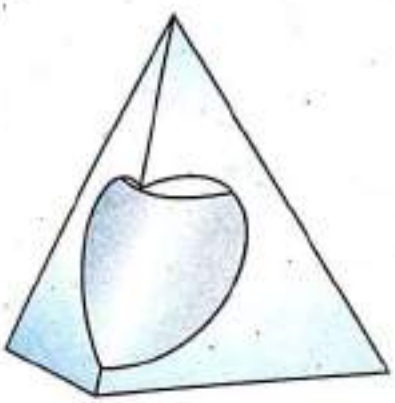

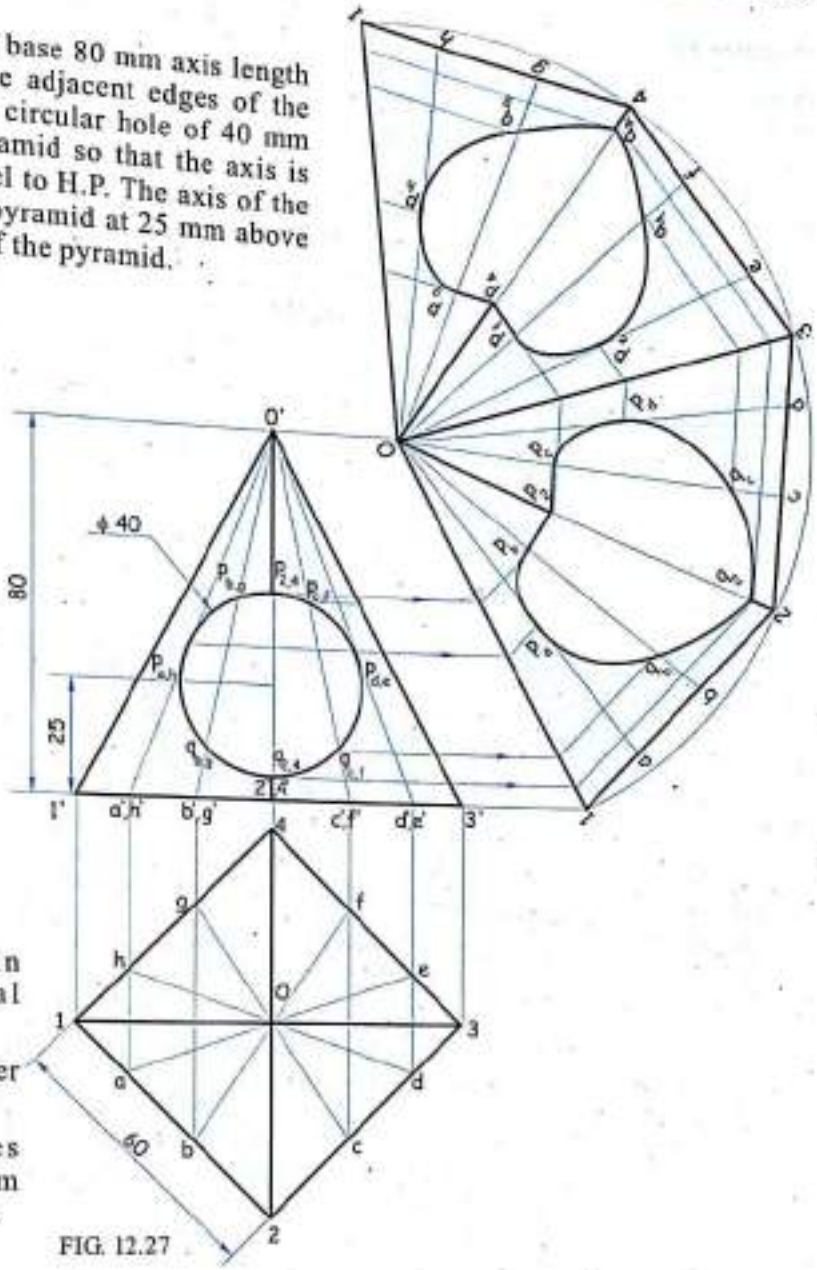

FIG. 12.27

1. Draw T.V. and project the F.V.
2. Draw the D.L.S. with thin construction line by usual method.
3. Draw circular hole in F.V. as per given condition.
4. Draw the extra slant lines tangents to the circular hole from O', considering it as a *key points*.

Tangential Key Point

The tangential points are key points because it decides the extremities of the curve.

To get smooth curve add extra slant lines centrally between tangential slant lines and slant edge.

5. Name the points as shown.

(i) Name the projected tangential slant lines and extra slant lines as *a, b, c, d, e, f, g, h* in T.V. and O'-a', O'-b', O'-c', O'-d', O'-e', O'-f', O'-g', O'-h' in F.V.

(ii) Locate p_a, p_b, p_c, p_d, p_e, p_f, p_g, p_h on D.L.S. respectively by horizontal cutting plane method as explained previously.

(iii) Locate p_2, q_2, p_4, q_4 by usual method.

6. Join all the points in proper sequence by smooth curve.

Scanned by CamScanner

Problem 16

A square pyramid (side of base 50 mm and axis 60 mm) is kept on the H.P. on its base with two of its sides of base parallel to V.P. An axial square hole of sides 25 mm is cut through the pyramid, so that the vertical faces of the hole are equally inclined to V.P. Draw projection of the solid and show the D.L.S.

(Nov. '04, M.U.)

Solution

Refer figure 12.28.

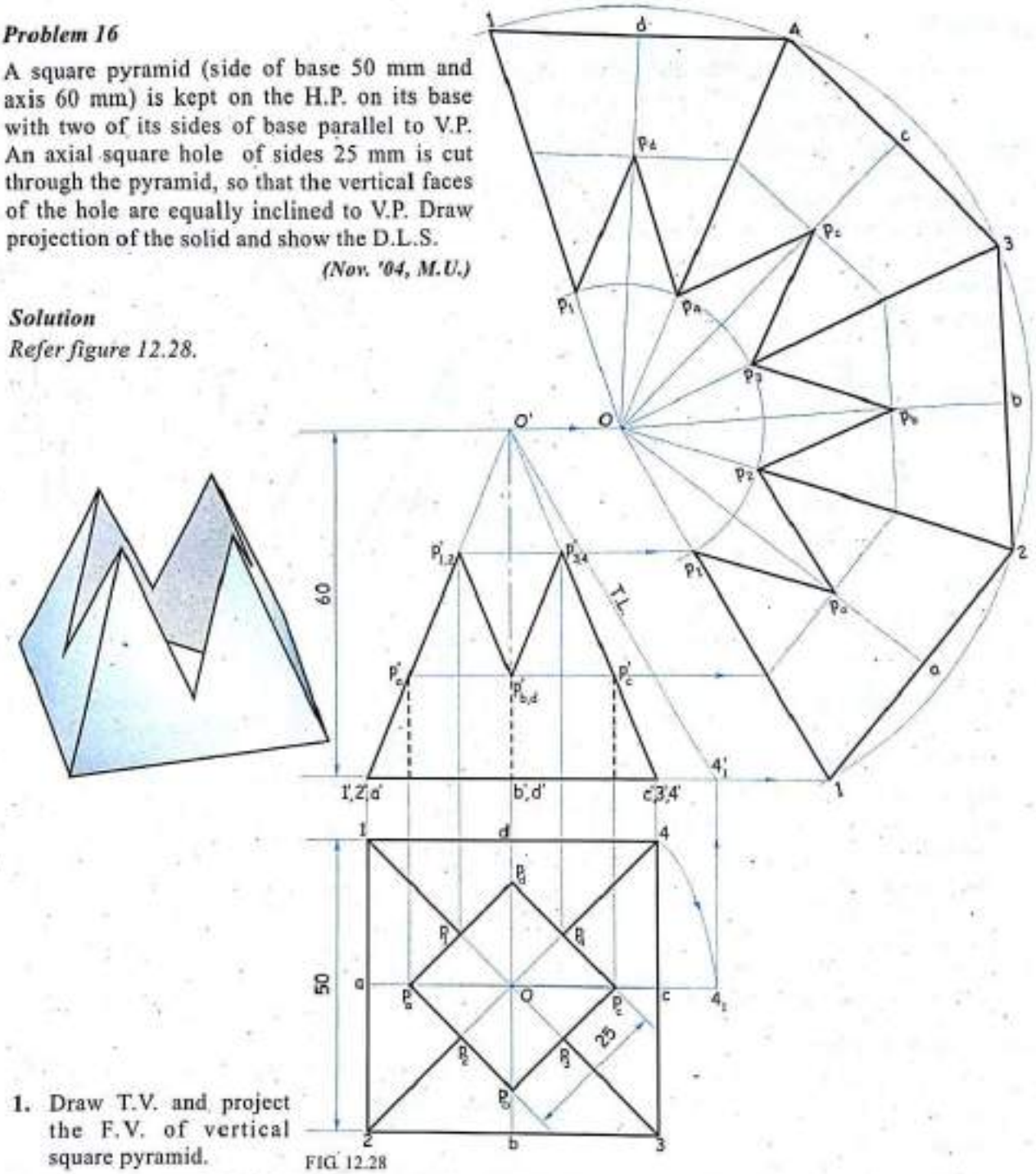

FIG. 12.28

1. Draw T.V. and project the F.V. of vertical square pyramid.
2. Draw a square hole, sides 25 mm centrally in T.V. with sides equally inclined to V.P. as shown.
3. Name the points following general practice.
4. Project the points in F.V. as discussed in previous problem.
5. Join the points in sequence by straight line in F.V.
6. Construct the T.L. of slant edge.
7. Transfer these projected points in the D.L.S. by usual method.

Scanned by CamScanner

12.8 Development of Cone

If a cone is rolled for one complete rotation on a plane with apex of the cone hinged at a point then the area covered by the cone will be a sector of circle which represents the development of lateral surface of a cone. *Refer figure 12.29.*

The radius of the sector (R) will be equal to the true length of the generator of the cone and the length of the arc will be equal to the circumference of the base circle of the cone.

The angle θ subtended by the arc of length equal to the circumference of base circle can be calculated as follows :

$$\theta = \frac{\textit{Circumference of the base circle}}{\textit{Circumference of the circle of radius } R} \times 360^\circ$$

$$= \frac{2\pi r}{2\pi R} \times 360^\circ$$

$$\theta = \frac{r}{R} \times 360^\circ$$

Where

r is the radius of the base circle.

R is the true length of generator.

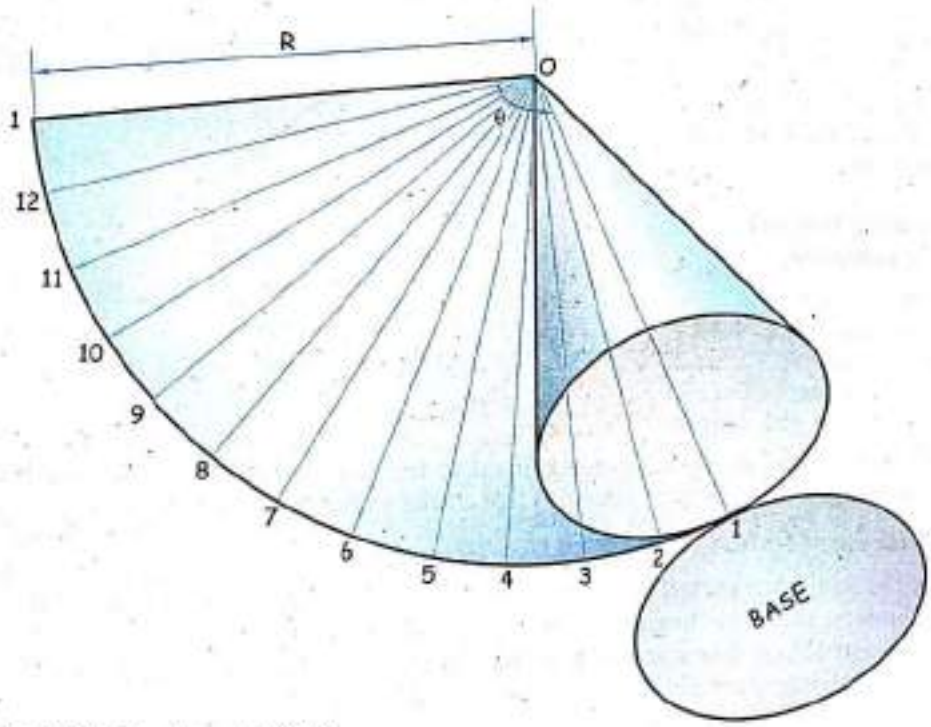

FIG. 12.29 : Development of Cone

Scanned by CamScanner

Problem 17

A right circular cone of base diameter 50 mm axis height 60 mm has it is base in H.P Draw the development of lateral surface (D.L.S.) of cone.

Solution : *Refer figure 12.30.*

1. Draw T.V and project F.V
2. Divide the base circle into 12 equal parts and draw the construction of generators with thin lines.
3. Name the points as shown.

(i) Name the 12 parts of circle as *1, 2, 3, ... 12* in T.V.

(ii) Name the generators of F.V. as *O'-1', O'-2', O'-3', ... O'-12'* respectively.

(iii) Name the generators of D.L.S. as *O-1, O-2, O-3, ... O-12.*

4. Calculate $\theta = \dfrac{360 \times r}{R}$
5. Take the true length of generator (R) as radius and draw the sector of circle with angle θ.
6. Divide the arc *1-1* of sector *1-0-1* which is D.L.S of cone into 12 equal parts.

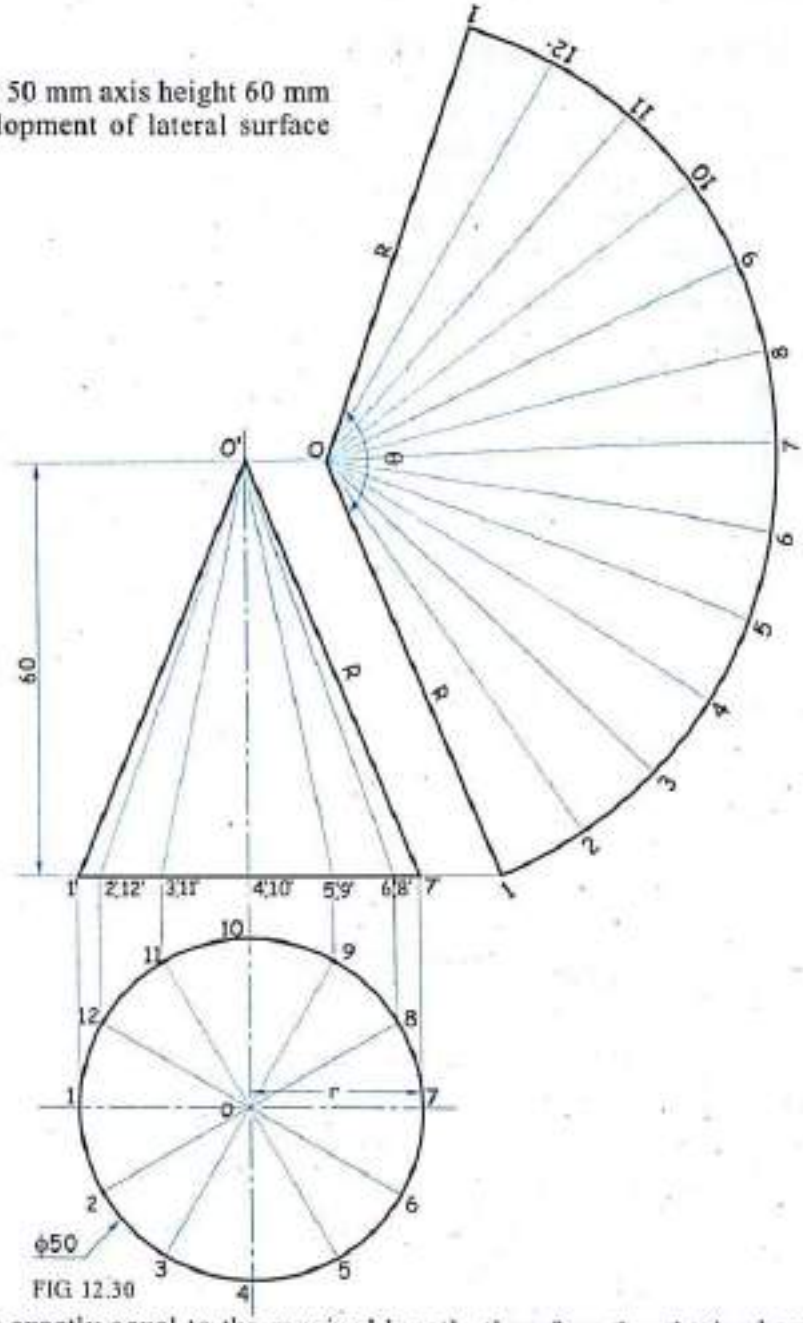

FIG 12.30

How to divide the given sector of circle into 12 equal parts

(I) Trial Error Method

With compass take $1/12^{th}$ division from T.V. and transfer to the arc of D.L.S. 12 times. Since the length of $1/12^{th}$ division of arc is not exactly equal to the required length, therefore the obtained arc will be shorter by 1.5% (approximately) that of the exact arc of D.L.S.

(II) Angle Bisector Method

(a) Draw the angle bisector of a sector of circle (D.L.S.) and obtained two equal sub-sectors.

(b) Further draw the angle bisector of two obtained sub-sectors.

(c) After constructing four equal sub-sectors of D.L.S.,with compass take $1/12^{th}$ division from T.V. and transfer three divisions in each sub-sectors of D.L.S.

(III) By Protractor

If $\theta/12 = x^{o}$, where x is a whole number than divide the sector of a circle (D.L.S.) directly with help of protractor.

Note : *Generators are drawn by thin lines.*

Scanned by CamScanner

Problem 18

A right circular cone having diameter at base 50 mm, axis length 70 mm resting on it's base in H.P. is cut by cutting plane perpendicular to V.P. and inclined to H.P. at 45°, bisect the axis. Draw the DLS of the lower remaining portion of the cone.

Solution

Refer figure 12.31.

1. Draw T.V. and project the F.V.
2. Draw the development of lateral surface as explained in previous problem (Initial construction line should be very thin.)
3. Draw the cutting plane *S-S* passing through the mid-point of the axis at 45° to the *XY* line.
4. Name the points as shown.

(i) Name F.V., T.V. and D.L.S. as explained previously.

(ii) Name the points of intersection (common points) of cutting plane and generators as p'_1, p'_2, p'_3, ... p'_{12} respectively. The cutting plane *S-S* cuts the generator *1'-1'* at p'_1 ; *2'-2'* at p'_2 ... *12'-12'* at p'_{12}. (Generator *O'-1'* will carry p'_1 ; *O'-2'* will carry p'_2, ...)

(iii) Project p'_1, p'_2 . . . p'_{12} horizontally on true length of generator *(i.e. O'-7' or O'-1')*.

(iv) Take *O'* as centre and projected true length of O'-p'_1, O'-p'_2, O'-p'_3, ... O'-p'_{12} as a radius and transfer it on D.L.S.

(v) Name the points as p_1, p_2, p_3, . . . p_{12} on respective generators of D.L.S.

5. Join all the points in proper sequence by smooth curve.

Since cone is bounded by curved surface, therefore join all the points in sequence by smooth curve.

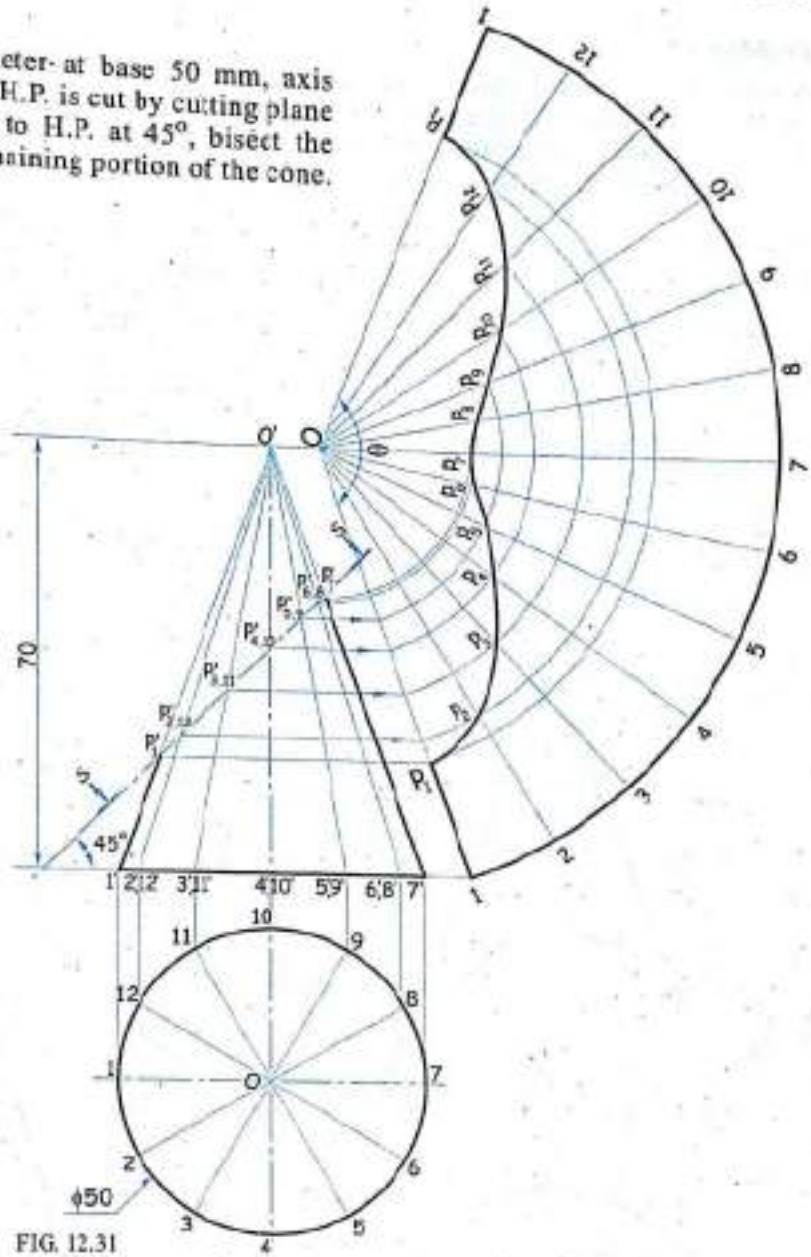

FIG. 12.31

Note :

1. *Convention followed in this chapter is to draw the thick object lines for the retained part and thin construction lines for the removed part of D.L.S. of solid.*
2. *Effect of cutting plane S-S is not shown in T.V. (which is already discussed very clearly in Chapter 6, Section of Solids) knowingly because here we are emphasising only on D.L.S.*

Scanned by CamScanner

Problem 19

A cone of diameter of base 60 mm and height 75 mm stands vertically with its base on the H.P. A square hole whose sides are 22 mm in length is cut through the cone. The axis of hole is 20 mm above the base perpendicular to the V.P. and parallel to H.P. The sides of square are equally inclined to H.P. Draw D.L.S. of cone with the hole.

Solution

Refer figure 12.32.

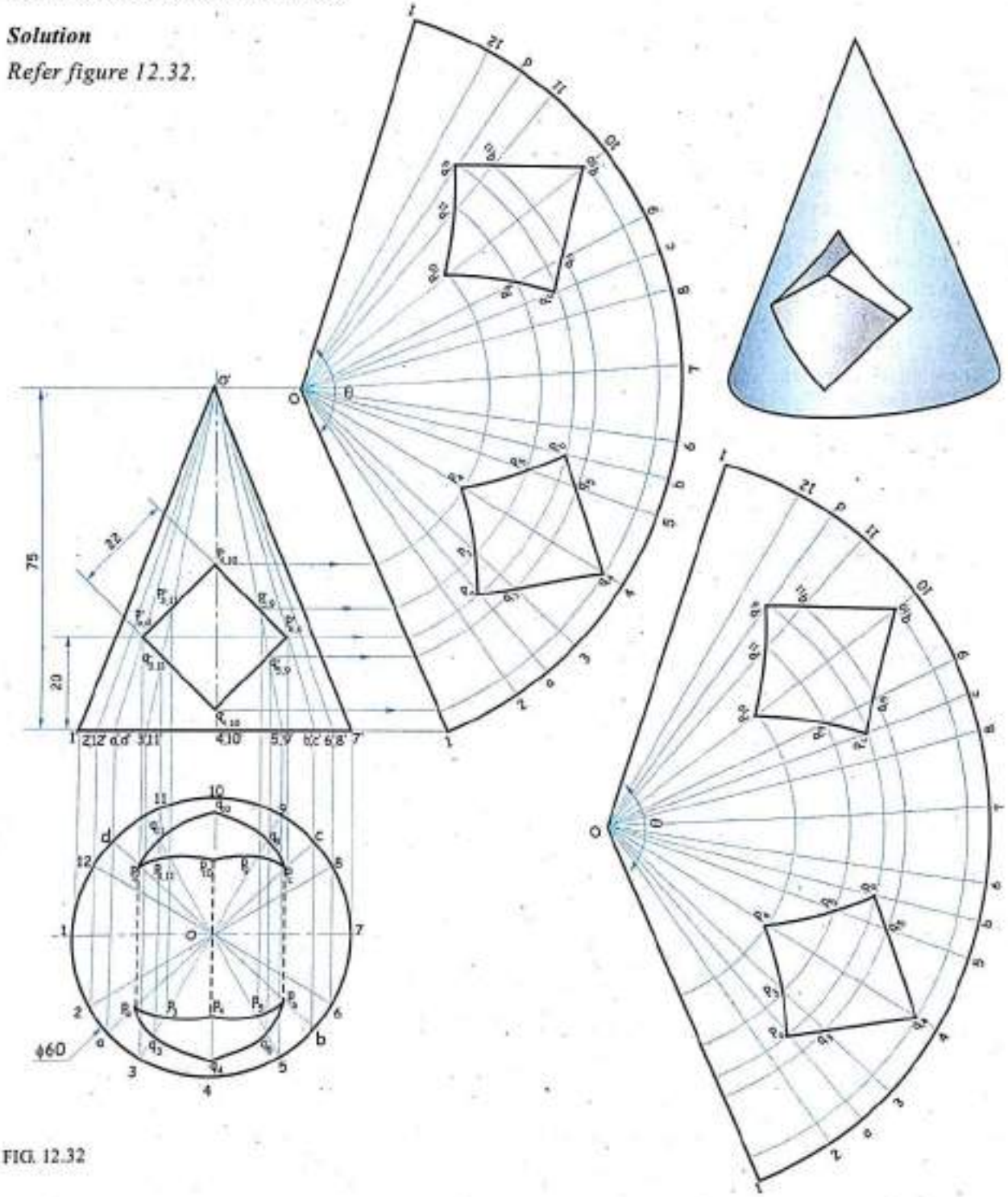

FIG. 12.32

Scanned by CamScanner

1. Draw T.V and project F.V.
2. Draw D.L.S. with thin construction line by usual method.
3. Draw the square hole in F.V. with sides equally inclined to H.P.
4. Construct the extra generators through corners of square hole considering it as a *key points*.
5. Name the points as shown.

(i) Name the points in T.V., F.V. and D.L.S. as explained previously.

(ii) Name the common point of cutting plane (here sides of square hole are cutting planes) and generators as $p'_{3,11}$, $q'_{3,11}$, $p'_{4,10}$, $q'_{4,10}$, $p'_{5,9}$, $q'_{5,9}$. (Generators O'-$3'$, O'-$11'$, O'-$4'$, O'-$1'$, O'-$5'$, O'-$9'$ are made to cut at two distinct points on cutting planes (sides of square) upper side and lower side. Let us say $p'_{3,11}$, $p'_{4,10}$, $p'_{5,9}$ for upper points and $q'_{3,11}$, $q'_{4,10}$, $q'_{5,9}$ for lower points.)

(iii) Project $p'_{3,11}$, $p'_{4,10}$, $p'_{5,9}$ and $q'_{3,11}$, $q'_{4,10}$, $q'_{5,9}$ horizontally on true length of generator (i.e O'-7 or O'-1)

(iv) Transfer the horizontally projected points distances of true length of generator from F.V. to D.L.S. by usual method.

(v) Draw the extra generators passing through key points These extra generators will generate points as a, b, c, d in T.V and O'-a', O'-b', O'-c', O'-d' in F.V.

(vi) With compass transfer the points a, b, c, d, of T.V. to the D.L.S. on the corresponding position (eg. take 2-a distance from T.V. in compass and 2 as a centre to mark 'a' on D.L.S.)

(vii) Draw extra generators in D.L.S. through these points (i.e. O-a, O-b, O-c, O-d)

(viii) Name the common points of cutting plane and extra generators as $p'_{a,d}$, $p'_{b,c}$ in F.V. (Extra generator O'-a' will carry p'_a, O'-b' will carry p'_b, O'-c' will carry p'_c, O'-d' will carry p'_d)

(ix) Project $p'_{a,d}$, $p'_{b,c}$ horizontally on true length of generator (i.e. O'-7 or O'-1) Take O' as a centre and projected true length of O'-p'_a, O'-p'_b, O'-p'_c, O'-p'_d as a radius and transfer it on D.L.S.

6. Join the points in proper sequence by smooth curve.

Generators: A straight line drawn from the apex to the circumference of the base circle are called generators of the cone.

Key Points : Corners of square hole are considered to be key points because there is a sudden change in the direction of the cutting plane (i.e. sides of square hole are cutting planes).

Note :

1. *For drawing D.L.S. either draw in line by taking locus of apex and base or draw separately.*
2. *Since we are emphasising on D.L.S. only, procedure to construct the effect of hole in top view though shown is not explained because it is a discussion of intersection of surfaces now excluded from syllabus. Henceforth T.V. in all problems solution will be kept incomplete.*

Scanned by CamScanner

Problem 20

A vertical cone base 66 mm diameter and axis 76 mm long is punched by a horizontal cylinder of diameter 30 mm. The axis of the punched hole, which is at 90° to V.P interests the axis of the cone 22 mm above the base Draw the D.L.S. of the cone with the hole.

Solution

Refer figure 12.33.

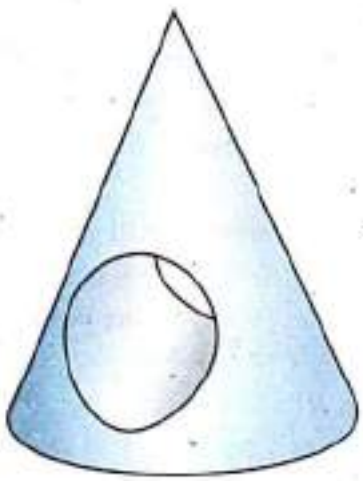

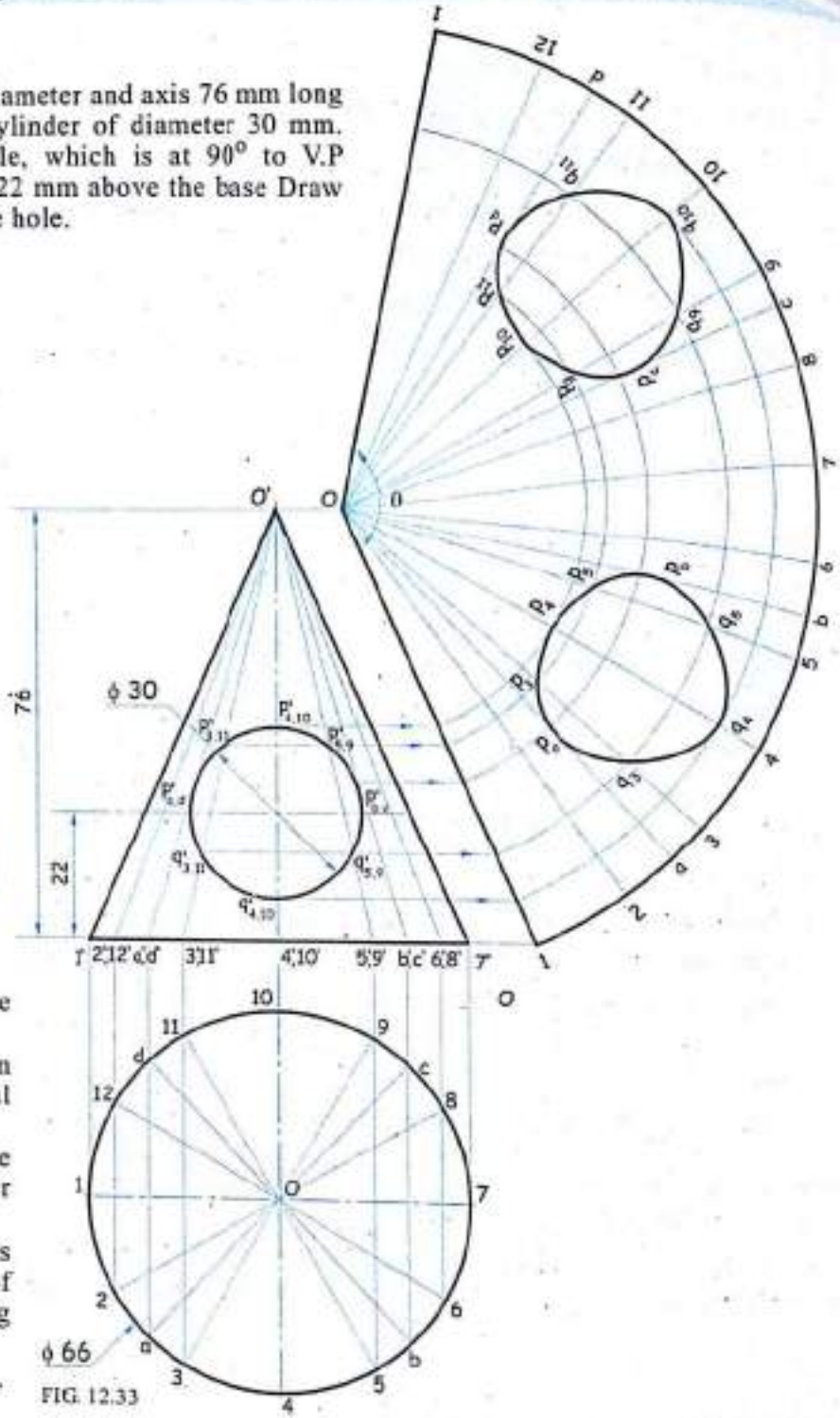

FIG. 12.33

1. Draw T.V. and project the F.V.
2. Draw D.L.S. with thin construction line by usual method.
3. Draw circular hole centrally in F.V. as per given condition.
4. Draw extra generator as tangent to the the circle of hole from O', considering it as *key points*.
5. Name the points as shown.

Tangential Key Points

The tangential points are key points because it decides extremities ends of the curve.

(i) Name the projected extra tangential generators as a, b, c, d in T.V. and O'-a', O'-b', O'-c', O'-d' in F.V.

(ii) Name the common points of cutting plane and extra generators as $p'_{a,d}$, $p'_{b,c}$ in F.V.

(iii) Locate p_a, p_b, p_c, p_d on D.L.S. by usual method.

6. Join all the points in proper sequence by smooth curve.

Scanned by CamScanner

Problem 21

Figure 12.34 (a) shows two views of a hollow cylindrical tube cut on both the top and bottom faces. Draw the development of the lateral surface of the cylinder. State the minimum size of rectangular sheet required to make the item.

Solution

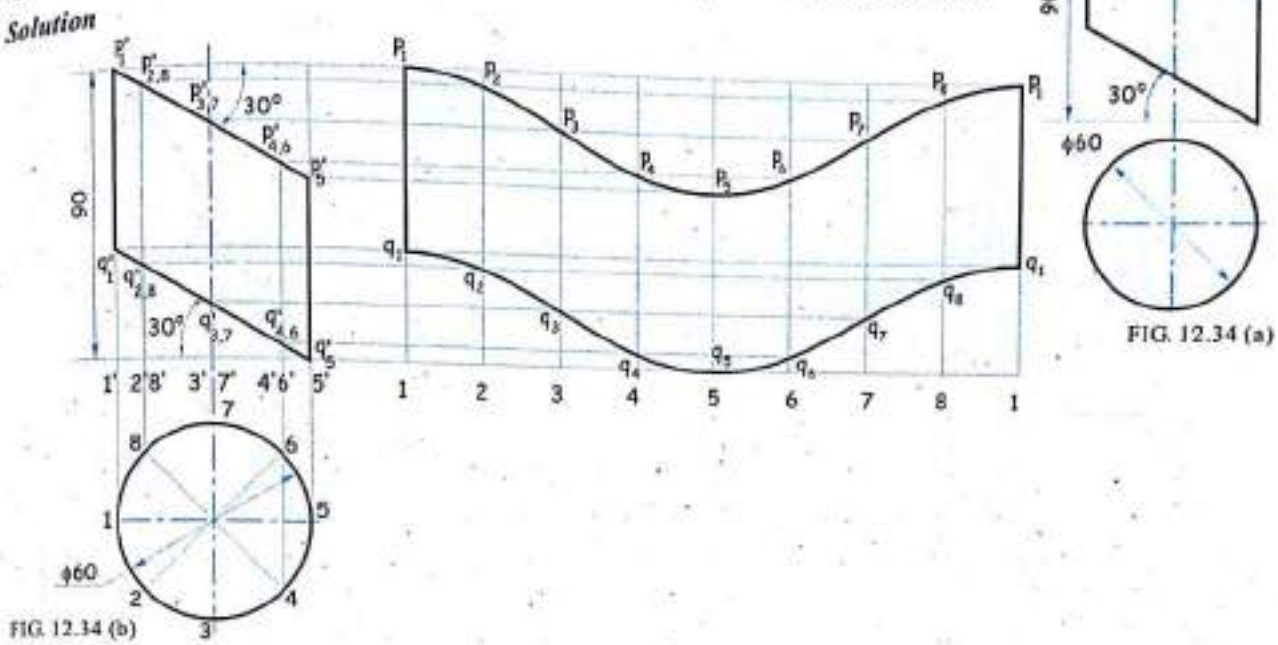

FIG. 12.34 (a)

FIG. 12.34 (b)

Problem 22

A truncated regular hexagonal prism is shown in *figure 12.35 (a)*. Draw to full size development of the lateral surface of the prism.

Solution

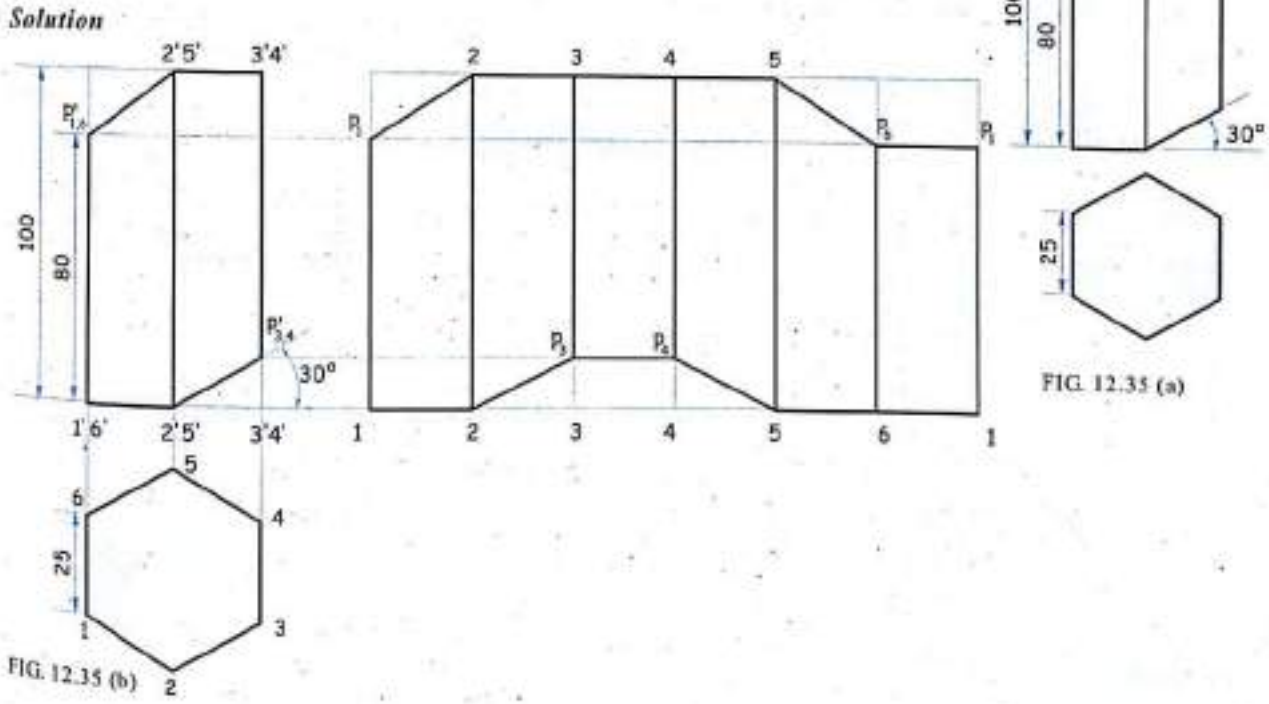

FIG. 12.35 (a)

FIG. 12.35 (b)

Scanned by CamScanner

Problem 23

Draw full size the development of the hexagonal prism shown in *figure 12.36 (a).*

Solution

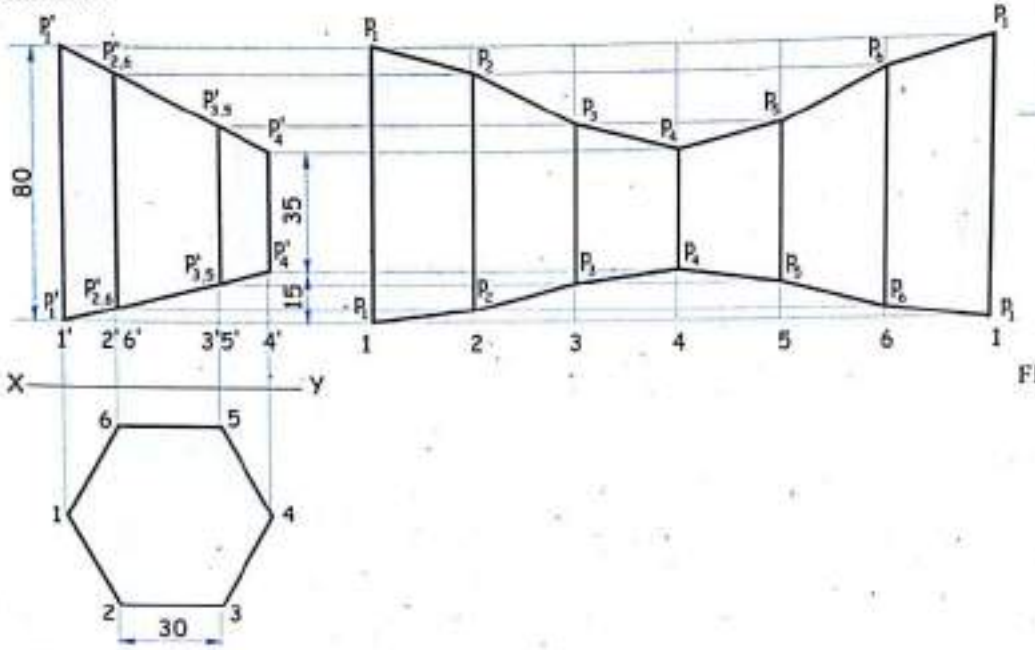

FIG. 12.36 (b)

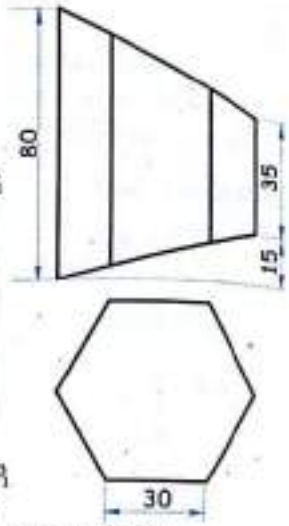

FIG. 12.36 (a)

Problem 24

A cylinder is cut to the shape and size as shown in *figure 12.37 (a).* Draw the development of its lateral (side) surface. State the length of the sheet required to produce such a cylinder.

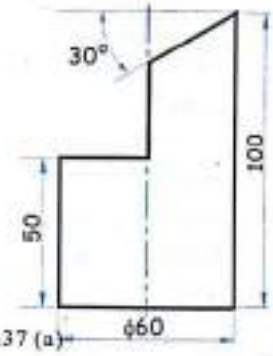

FIG. 12.37 (a)

Solution

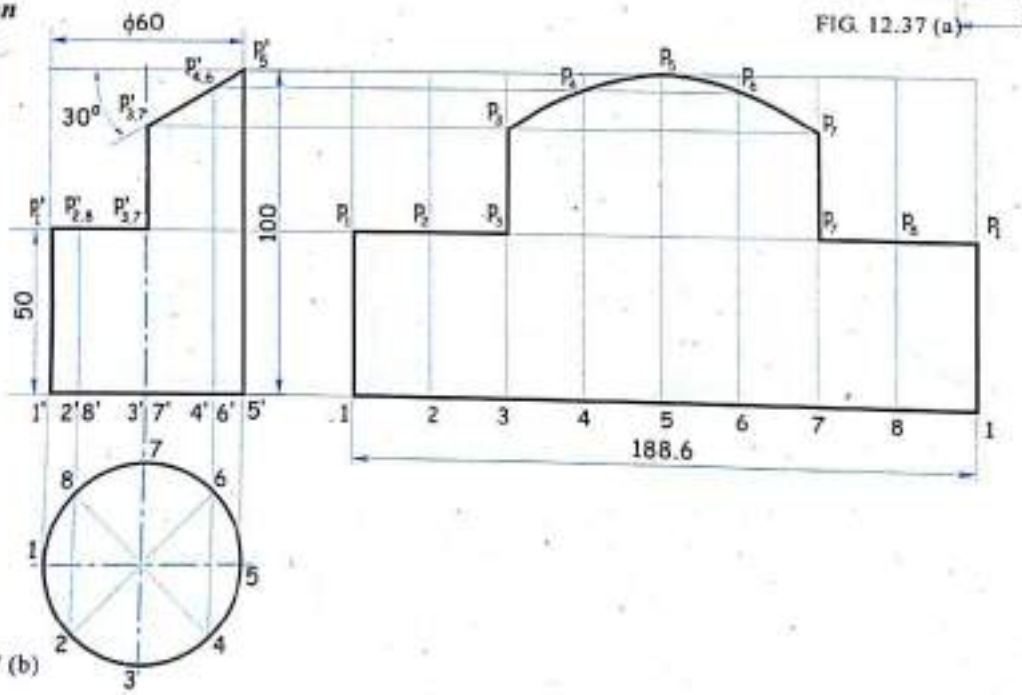

FIG. 12.37 (b)

Scanned by CamScanner

Problem 25

The elevation of a thin metal ventilation pipe which passes through an inclined roof is shown in the two views of the pipe shown in *figure 12.38 (a)*. Draw the development of the pipe and elbow. Use 1:5 scale.

FIG. 12.38 (a)

Solution

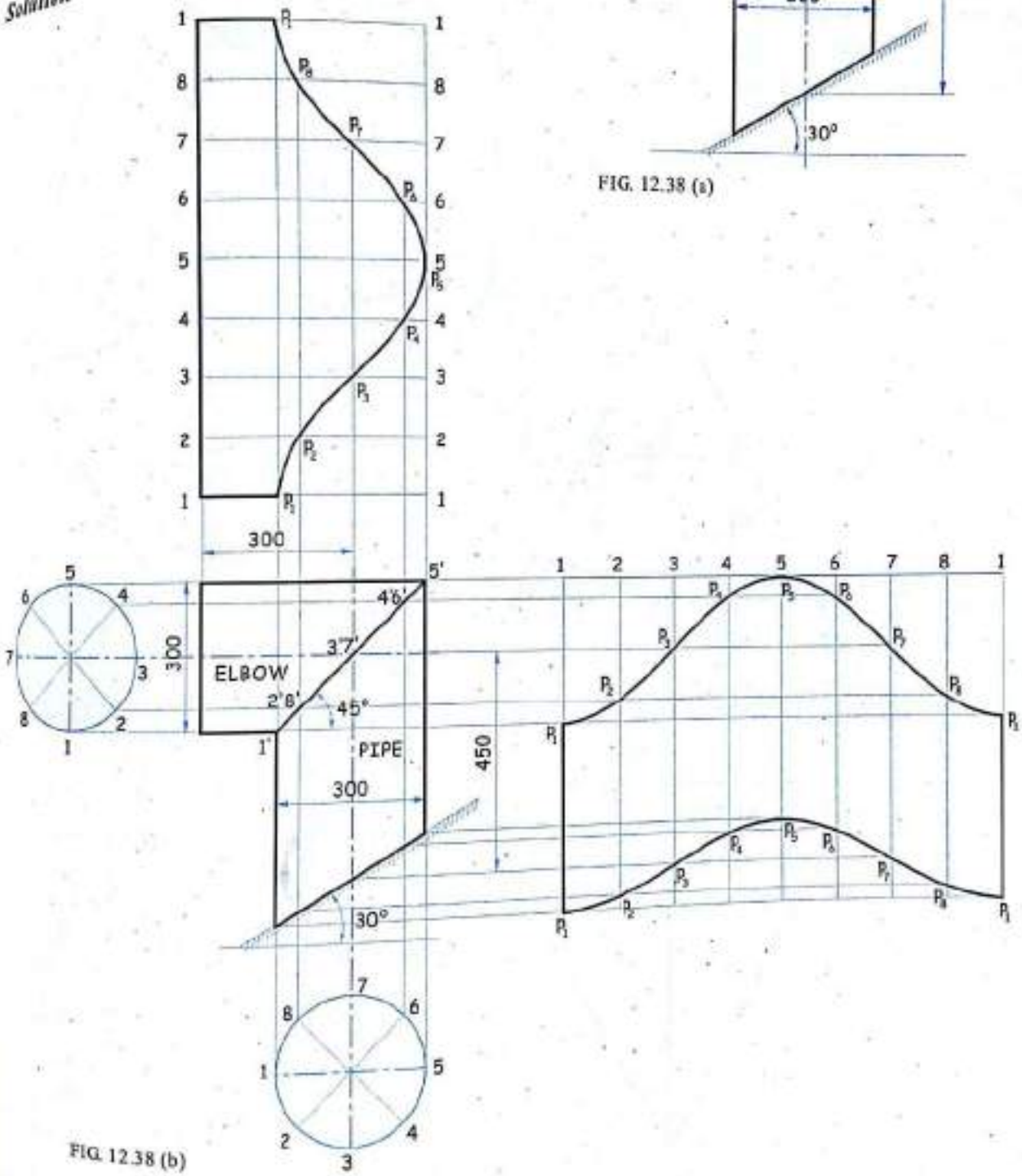

FIG. 12.38 (b)

Scanned by CamScanner

Problem 26

A triangular pyramid edge of base 60 mm, height 60 mm is resting on its base in H.P. with one of its base edges parallel to V.P. A square hole of 20 mm side is punched into triangular pyramid with its perpendicular to V.P. intersecting the axis of the pyramid at 30 mm from the base. Two faces of the square hole are parallel to H.P. Develop the lateral surface of the pyramid.

(May '08, M.U.)

Solution

Refer figure 12.39.

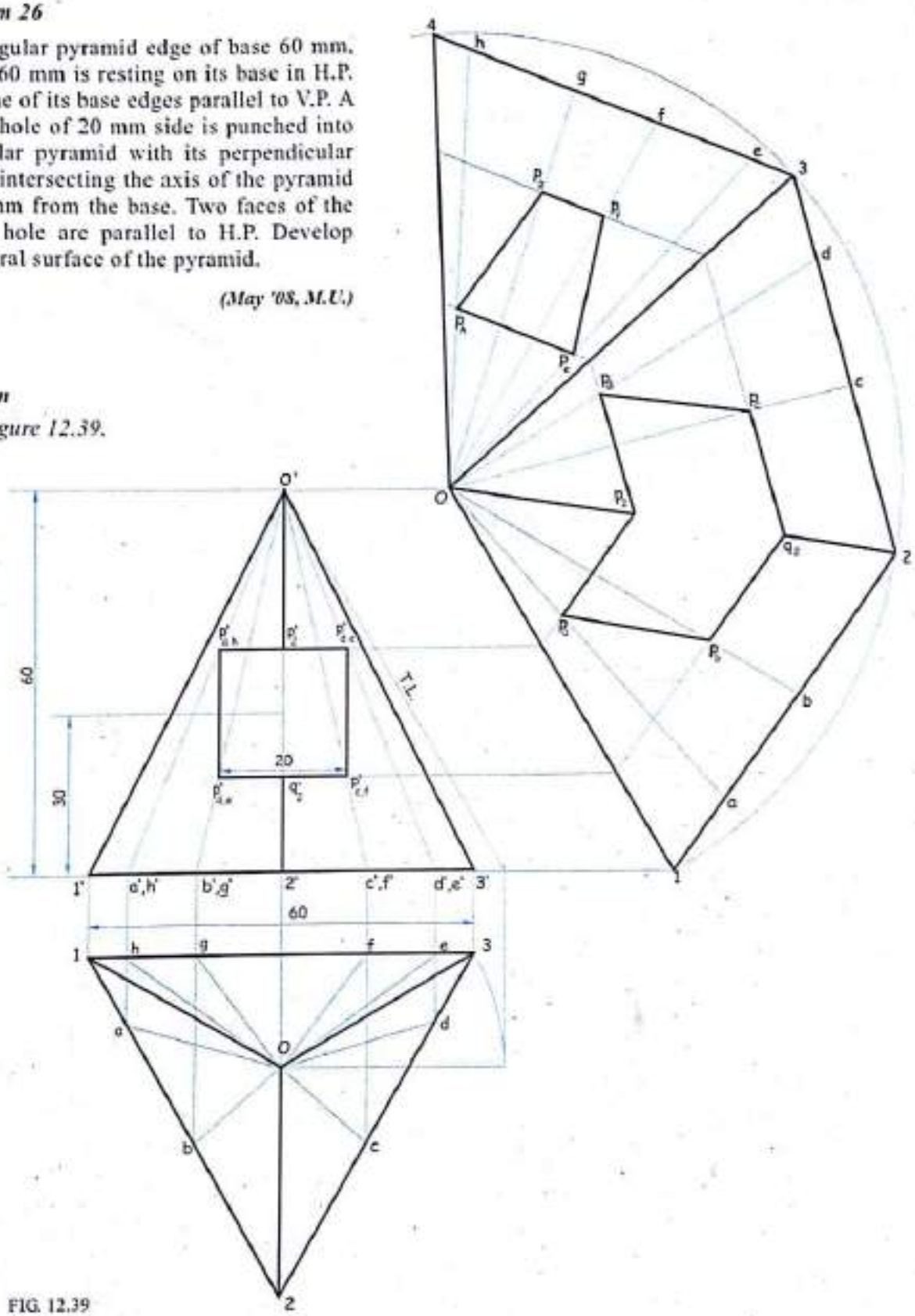

FIG. 12.39

Scanned by CamScanner

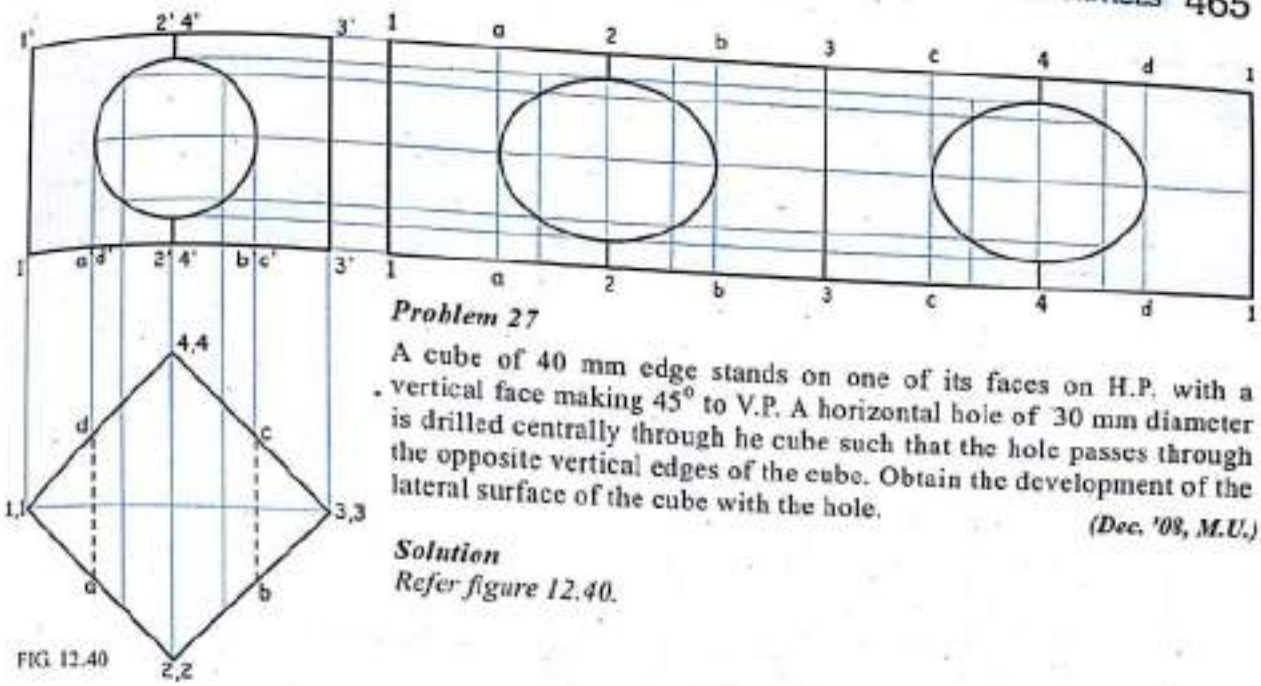

FIG. 12.40

Problem 27

A cube of 40 mm edge stands on one of its faces on H.P. with a vertical face making 45° to V.P. A horizontal hole of 30 mm diameter is drilled centrally through he cube such that the hole passes through the opposite vertical edges of the cube. Obtain the development of the lateral surface of the cube with the hole.

(Dec. '08, M.U.)

Solution

Refer figure 12.40.

Problem 28

A cylinder with base diameter 66 mm and axis length 90 mm, has its base in H.P. A square hole of side 36 mm is punched centrally having its sides equally inclined with H.P. Draw the development of lateral surface (D.L.S.) with hole.

(May '09, Dec. '09, M.U.)

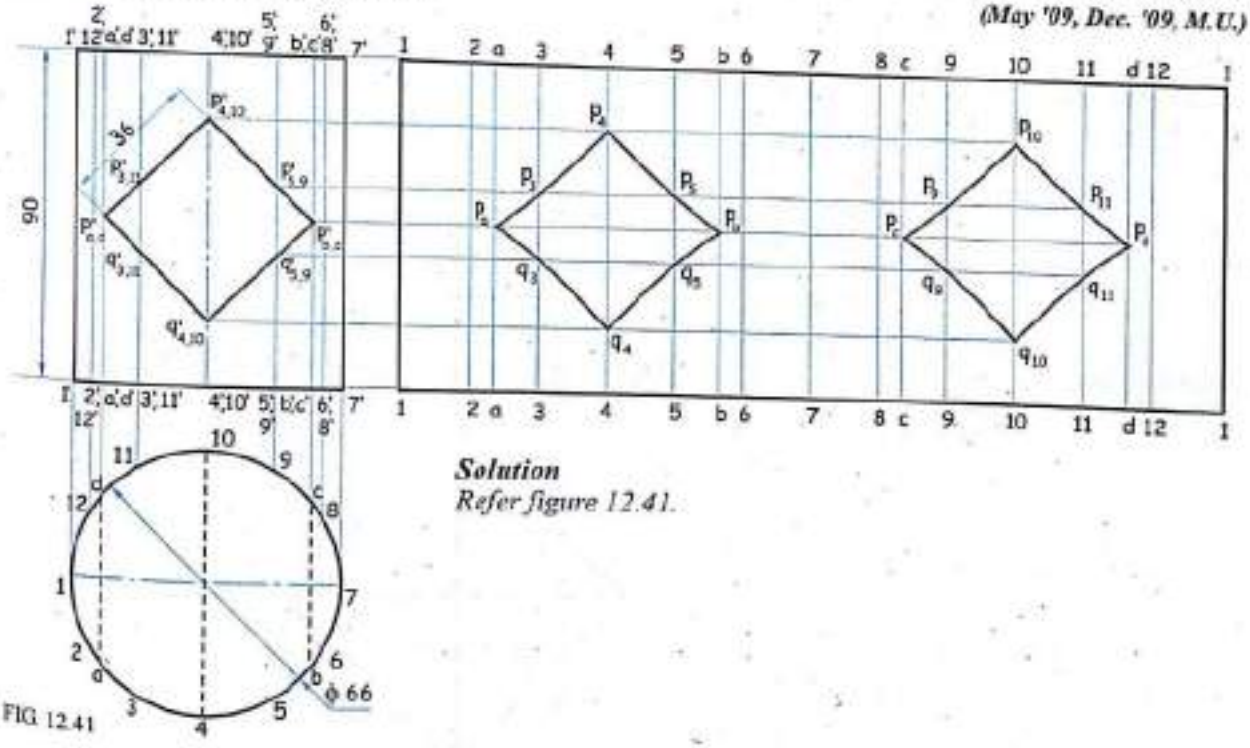

FIG. 12.41

Solution

Refer figure 12.41.

Scanned by CamScanner

Solution : *Refer figure 12.42.*

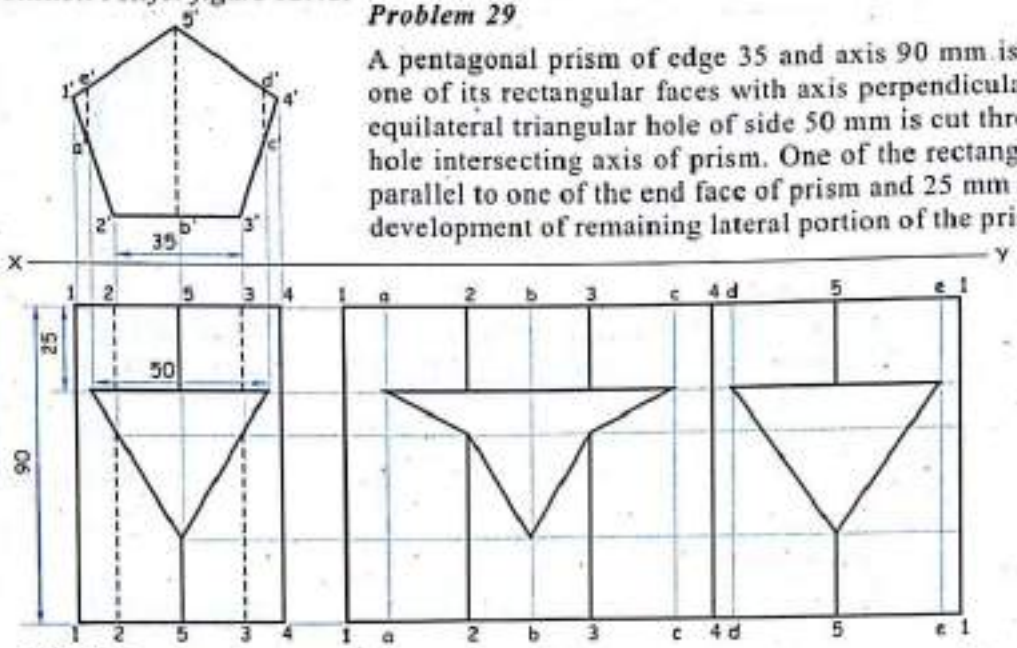

FIG. 12.42

Problem 29

A pentagonal prism of edge 35 and axis 90 mm is resting on H.P. on one of its rectangular faces with axis perpendicular to V.P. A vertical equilateral triangular hole of side 50 mm is cut through it with axis of hole intersecting axis of prism. One of the rectangular face of hole is parallel to one of the end face of prism and 25 mm away from it. Draw development of remaining lateral portion of the prism. ***(May '10, M.U.)***

Problem 30

A square pyramid, side of base 50 mm and height 50 mm is resting on H.P. on its base with all the edges of the base equally inclined to V.P. A rectangular slot 40 mm wide and 15 mm high is made in the centre at the bottom of the pyramid. Draw the development of the lateral surface of the pyramid. the position of the slot in T.V. also.

(May '11, M.U.)

Solution : *Refer figure 12.43.*

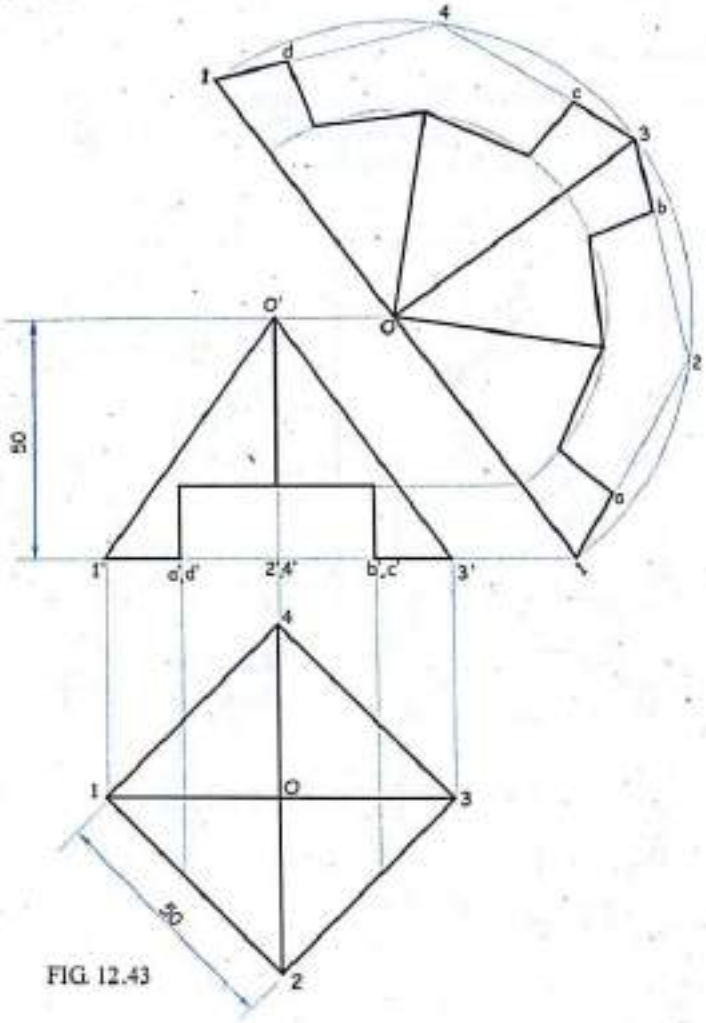

FIG. 12.43

Scanned by CamScanner

Problem 31

A cone of base diameter 80 mm and height 100 mm is resting on its base on the H.P. It is penetrated by a horizontal rectangular hole such that the axis of hole with sides 50 mm and 35 mm is perpendicular to V.P. and parallel to H.P. One of the corner of the hole is 25 mm above and 20 mm on the right side from the left most point at the base of the cone. The smaller side of the hole is inclined at 30° with H. P. Draw the D.L.S. of cone with hole.

(Dec. '10, M.U.)

Solution

Refer figure 12.44.

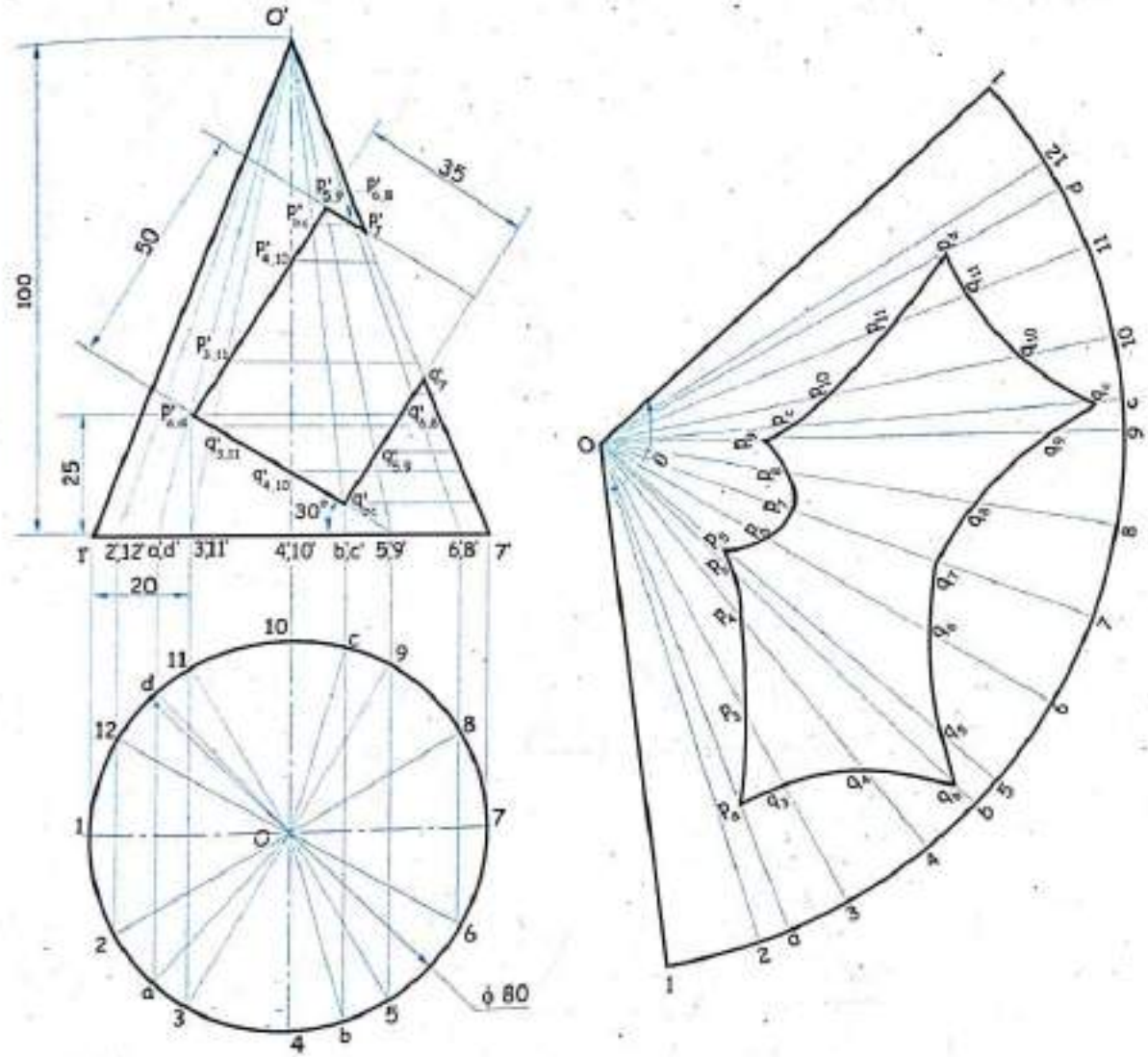

FIG. 12.44

Scanned by CamScanner

Problem 32

A hexagonal pyramid, side of the base 30 mm and height 70 mm is resting on its base on H.P., having a pair of base sides parallel to V.P. A square hole of sides 25 mm is cut through it such that its axis is parallel to H.P., perpendicular to V.P. and intersects the axis of pyramid 22 mm from the base. Faces of the hole are equally inclined to H.P. Draw DLS of the pyramid with the hole.

(Dec. '11, M.U.)

Solution

Refer figure 12.45.

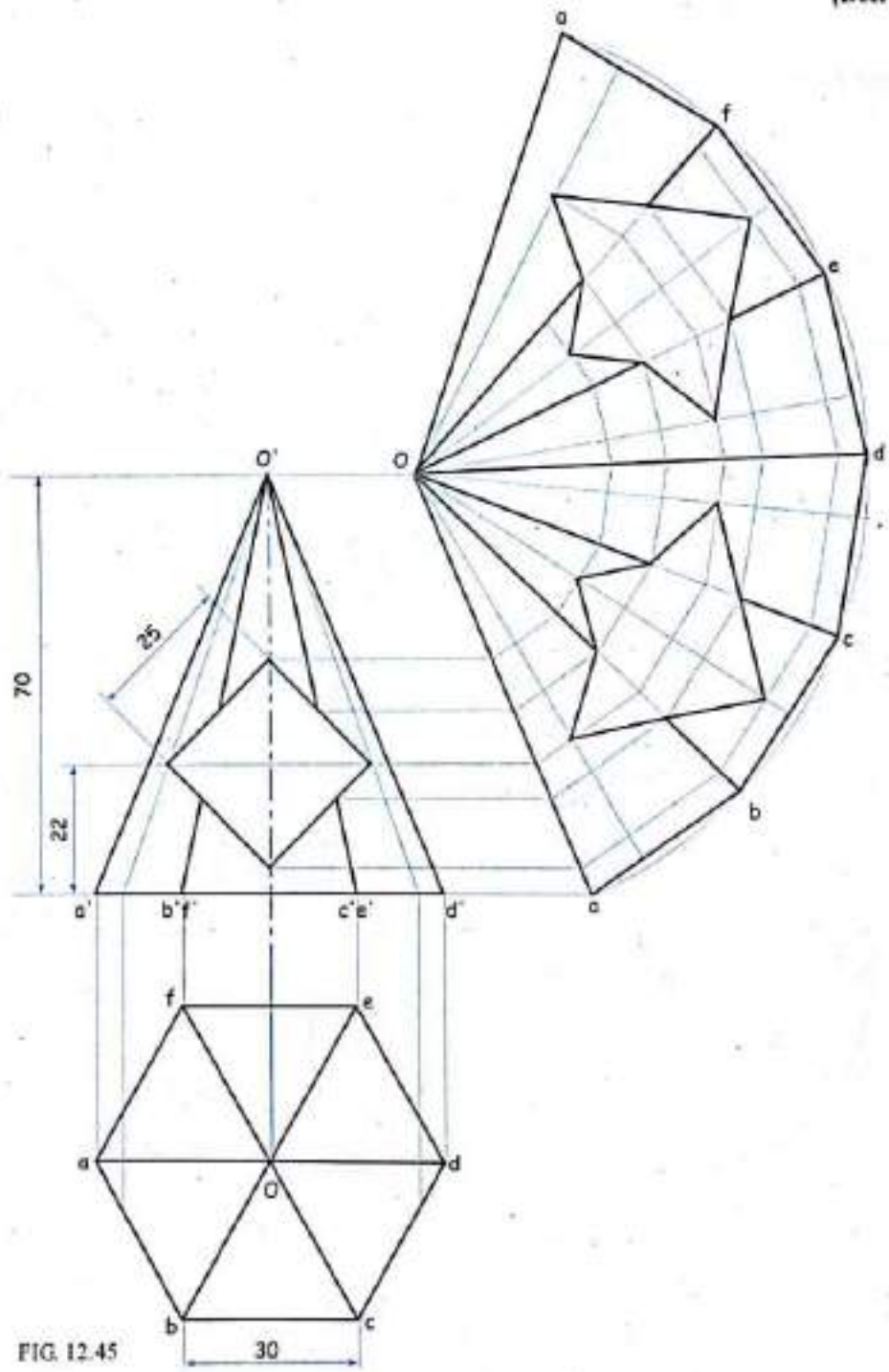

FIG. 12.45

Scanned by CamScanner

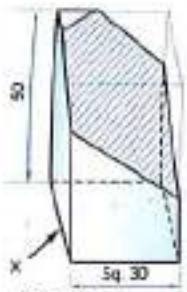

FIG. 12.46 (a)

Problem 33

Square prism side of base 30 mm, axis height 50 mm has its base in the H.P. such that its sides of base are equally inclined with the V.P. A section plane perpendicular to the V.P. and inclined to the H.P. at 45° cuts the prism such that it passes through the point on the axis at a distance of 12 mm below the top base. Assuming the major part to be retained, drew the projection of a prism showing the F.V., sectional T.V., sectional S.V. and the true shape of a section. Add development of lateral surface of the retained prism.

Solution

Refer figure 12.46 (a) and (b)

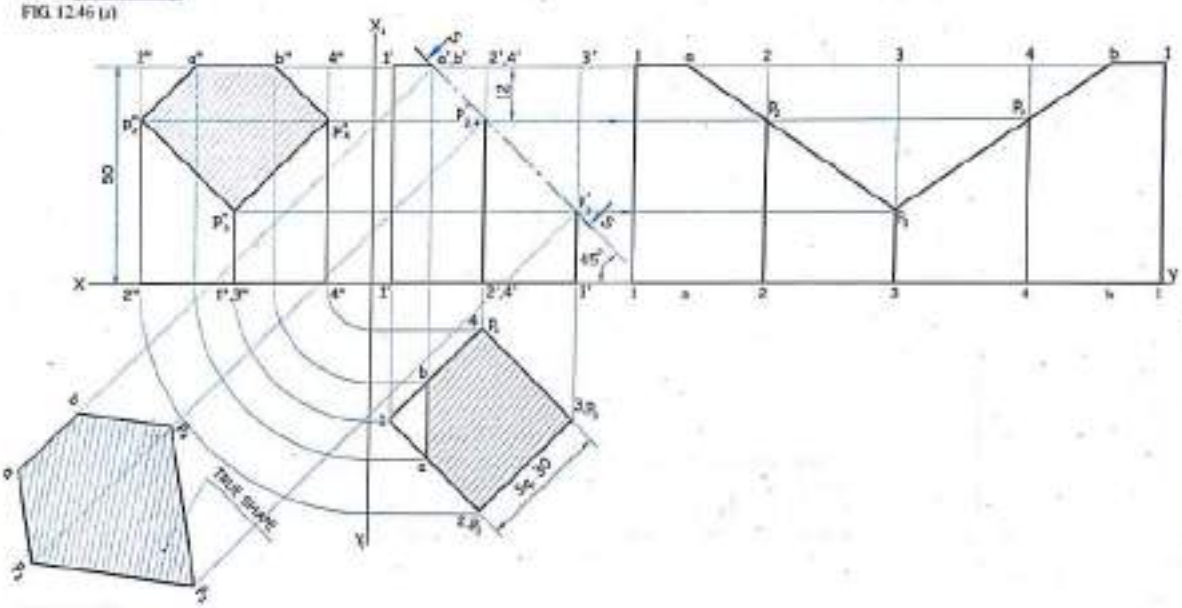

FIG. 12.46 (b)

Scanned by CamScanner

Problem 34

A hexagonal prism with 28 mm sides of base and 65 mm axis height is resting its base on H.P. and has one side of base perpendicular to V.P. The front view is given in *figure 12.45 (a)*. Draw the top view, front view and left hand side view of the prism. Also draw true sectional shape and the development of lateral surface of the prism remaining after the section.

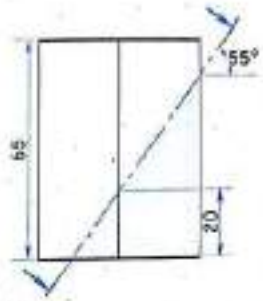

FIG. 12.45(a)

Solution

Refer figure 12.47 (b).

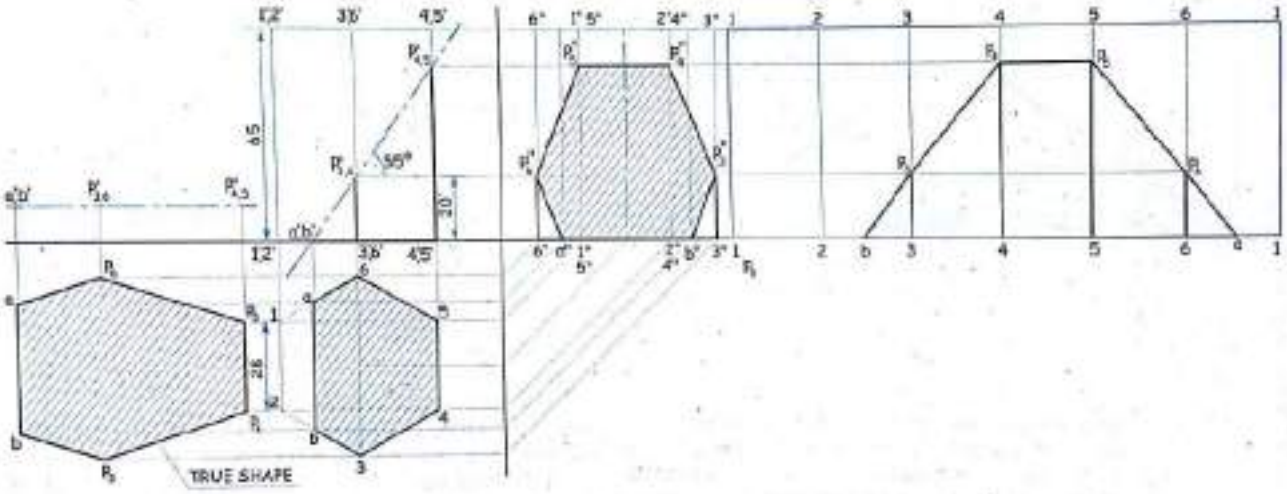

Scanned by CamScanner

Problem 35

Draw the front view, sectional top view, sectional side view, true shape of cut surface and lateral surface development of hexagonal prism cut on top by a plane the vertical trace of which is shown in *figure 12.48 (a)*.

Solution

Refer figure 12.48 (b).

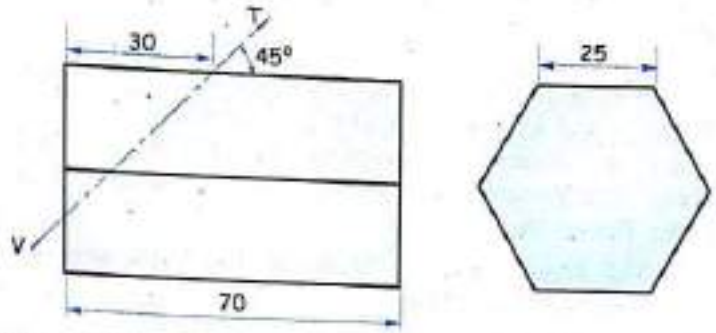

FIG. 12.48 (a)

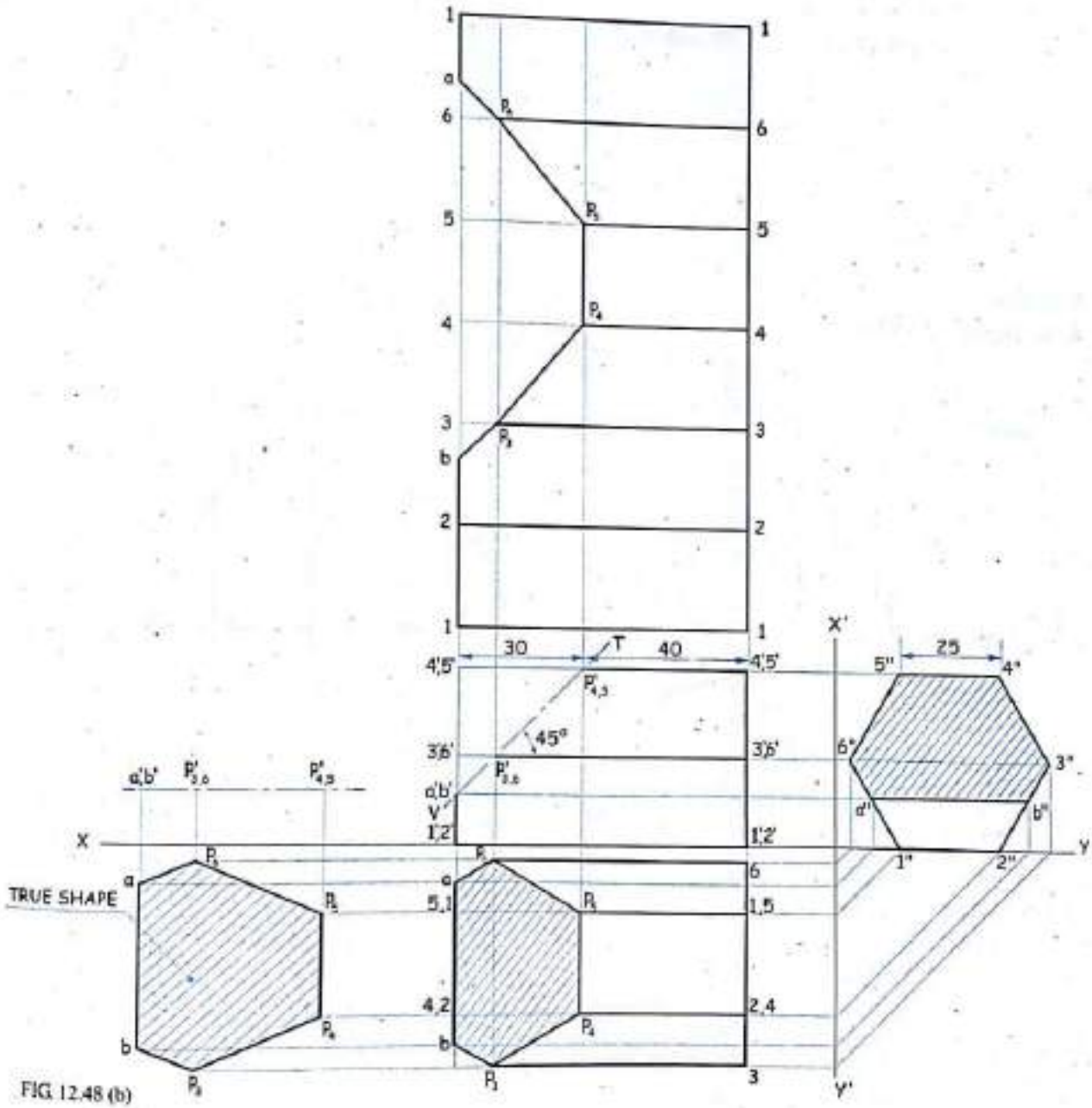

FIG. 12.48 (b)

Scanned by CamScanner

Problem 36

Figure 12.49 (a) given below shows a hexagonal prism which is cut by a cutting plane inclined at 60° to the Horizontal Plane and perpendicular to the Vertical plane. The Vertical Trace of the cutting plane is shown in the figure. Draw :

(a) The Front view, the Sectional Top View and the Sectional Right Hand Side View.

(b) The Development of the Lateral Surface.

Give : Side of the base = 25 mm.

Length of the axis = 55 mm.

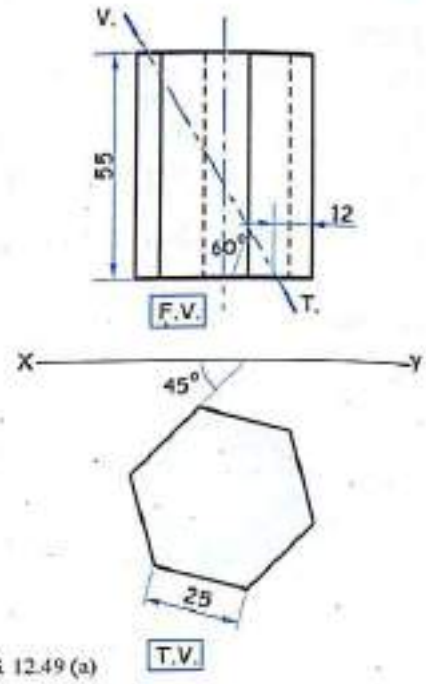

FIG. 12.49 (a)

Solution

Refer figure 12.49 (b).

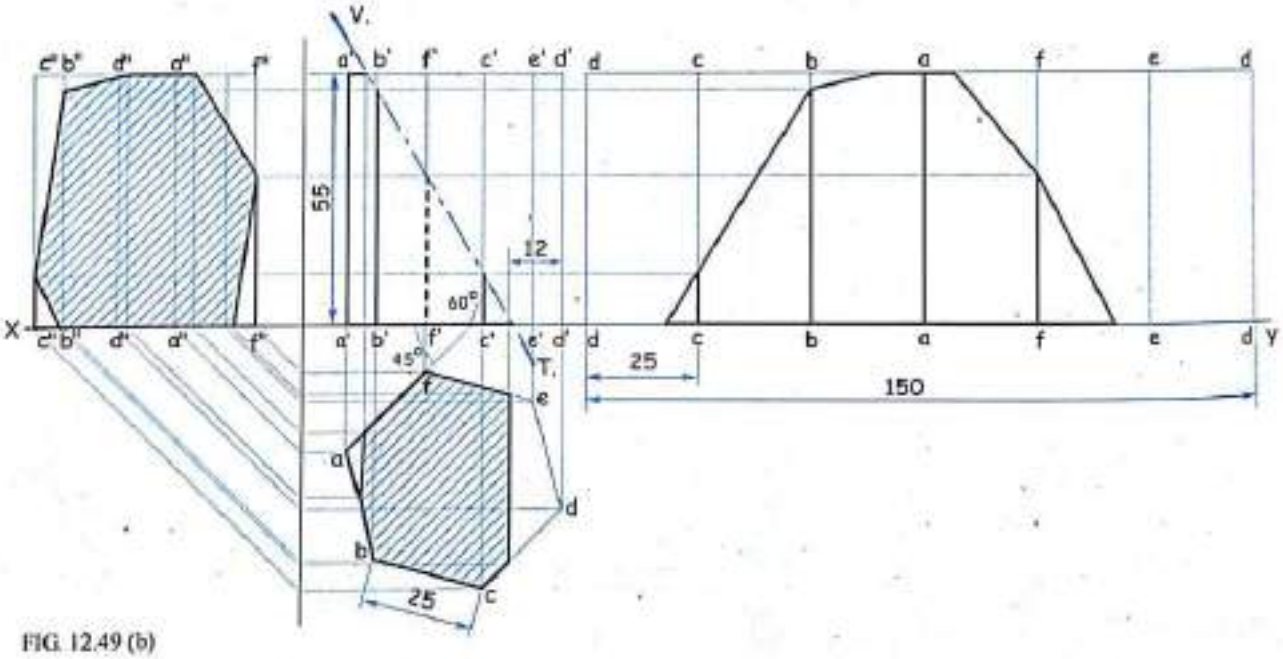

FIG. 12.49 (b)

Scanned by CamScanner

Problem 37

A square pyramid of 30 mm edges of base and 50 mm height is resting on its base with one of the edges of the base perpendicular to the V.P. It is cut by an A.I.P. in such a way that it bisects the axis and is inclined at 45° to the H.P. Draw elevation, sectional plan, sectional end view and the true shape of section. Also draw the development of lateral surface.

Solution

Refer figure 12.50

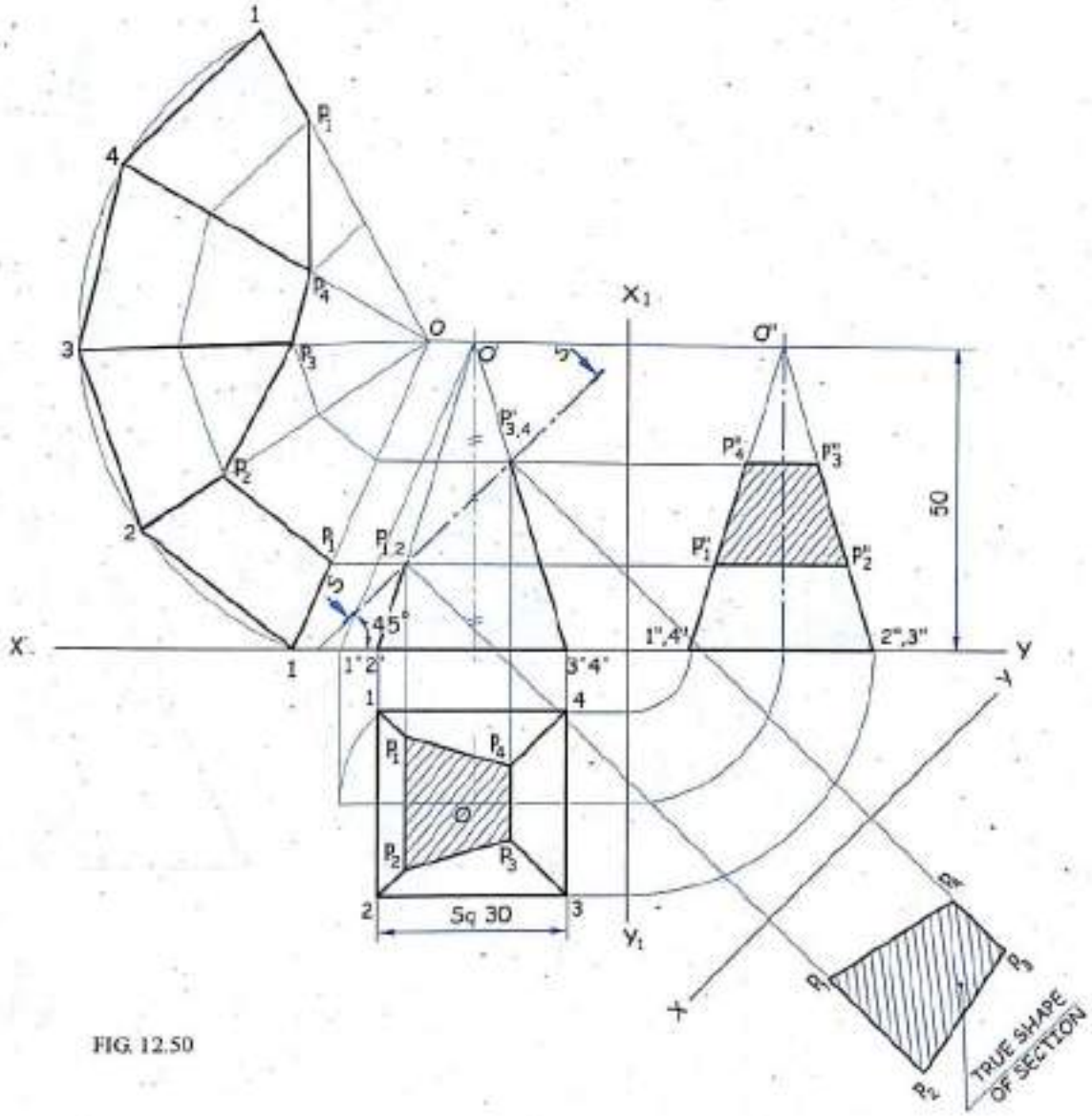

FIG. 12.50

Scanned by CamScanner

Problem 38

A square pyramid edge of base 30 mm, axis height 50 mm rests on its base in the H.P. with one of the edge of base parallel to the V.P. A sectional plane which is the H.T. cuts the pyramid at an angle 45° to the V.P. and is 6 mm away from the axis of a pyramid. Draw the T.V., sectional F.V., sectional S.V. and the development of lateral surface. Also draw the true shape of the section.

Solution

Refer figure 12.51 (a) and (b).

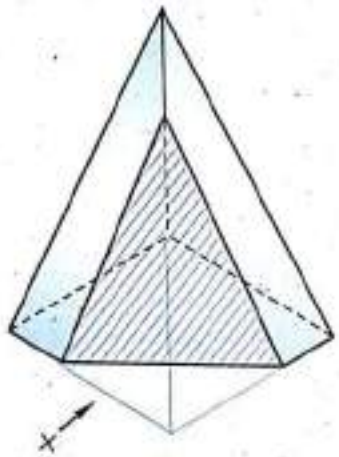

FIG. 12.51 (a)

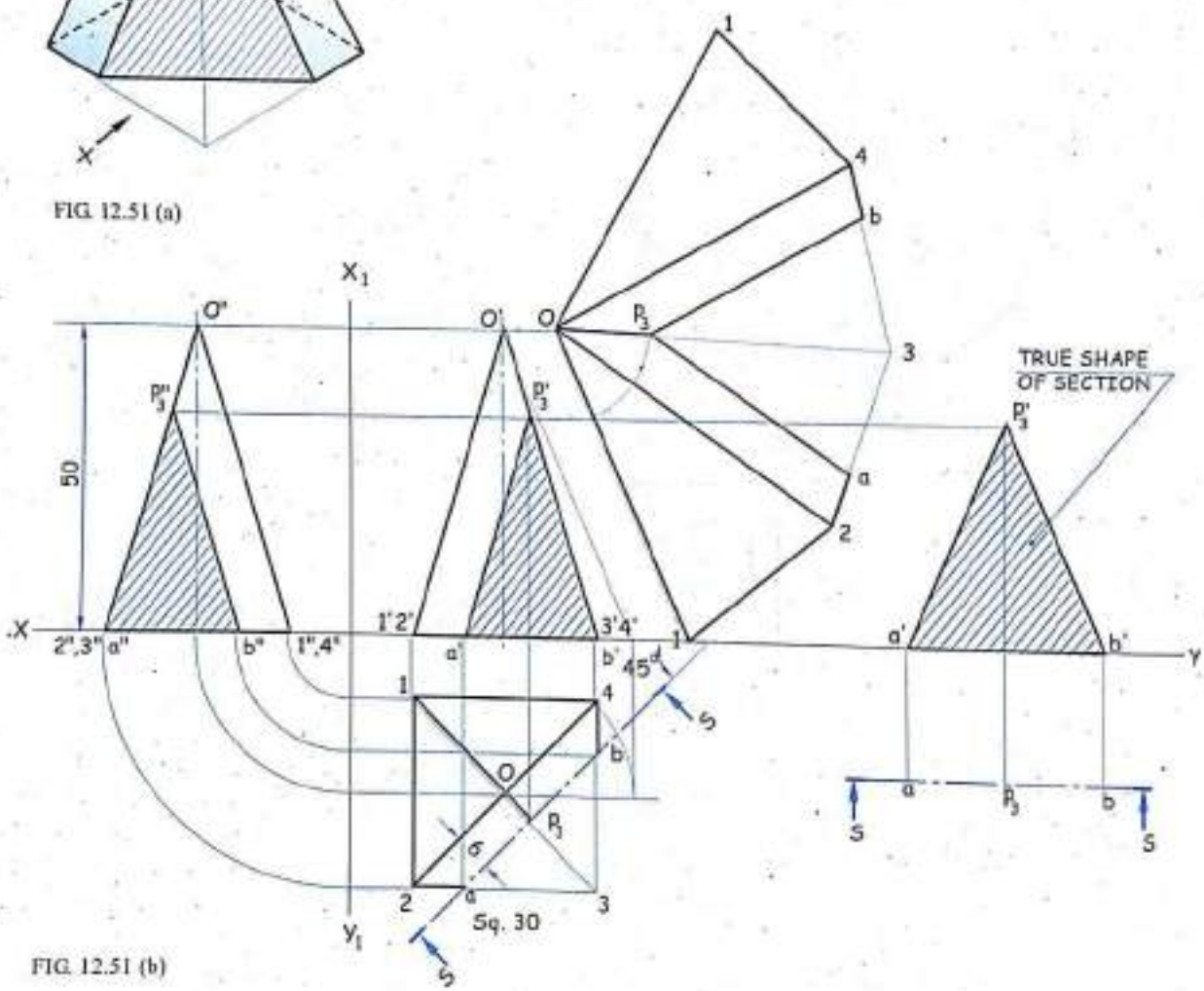

FIG. 12.51 (b)

Scanned by CamScanner

Problem 39

A square pyramid, base 30 mm and axis 40 mm long stands vertically on the H.P. with the edges of a base equally inclined to the V.P. It is cut by the section plane perpendicular to the V.P., inclined at 45° to the H.P. and passing through the point on the axis 25 mm from the apex. Draw the F.V., sectional T.V., sectional S.V. and the true shape of a section. Also draw the D.L.S. assuming apex part to be removed.

Solution

Refer figure 12.52 (a) and (b).

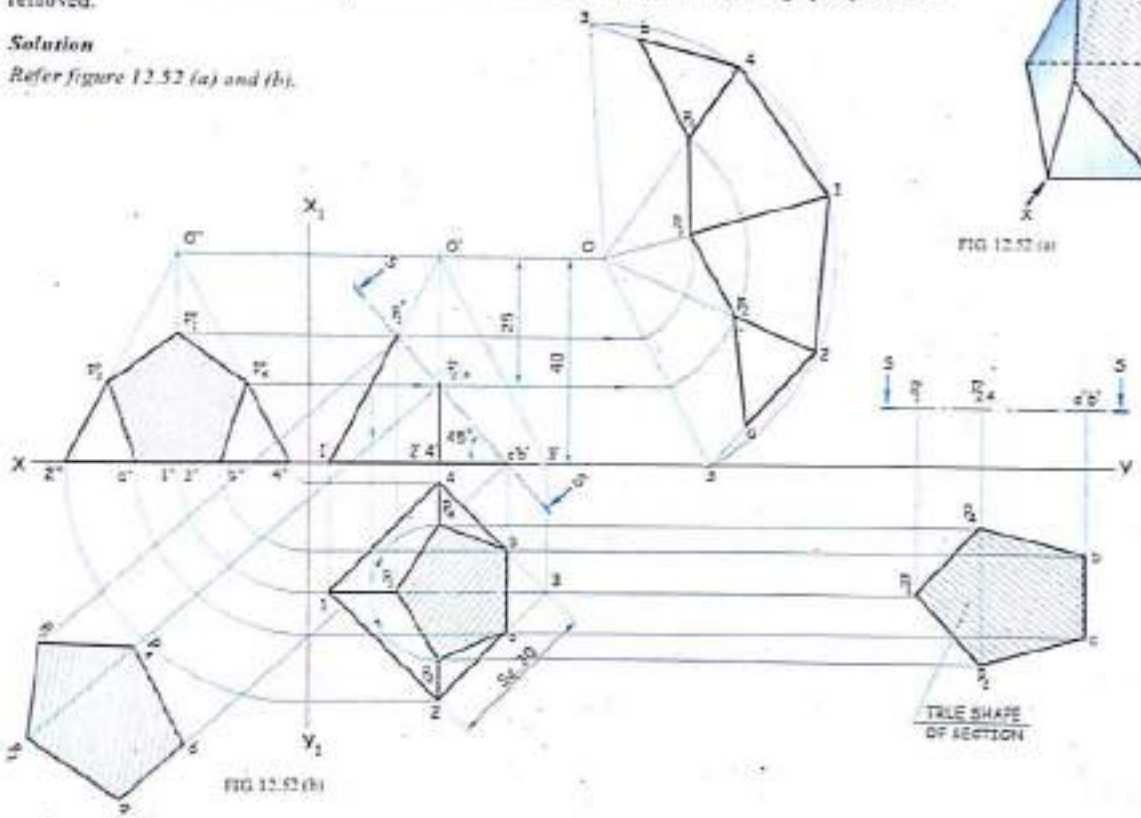

FIG. 12.52 (b)

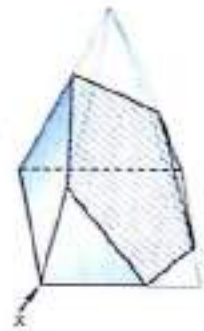

FIG. 12.52 (a)

Scanned by CamScanner

Problem 40

A hexagonal pyramid of 35 mm side of base and 65 mm axis length rest on its base on the H.P. with one of its side of a base perpendicular to the V.P. It is cut by the section plane whose H.T. makes an angle 30° with the *XY* and is 15 mm away from the axis of a pyramid. Draw the T.V., sectional F.V., sectional S.V. and the development of lateral surface. Also draw the true shape of the section.

Solution

Refer figure 12.53.

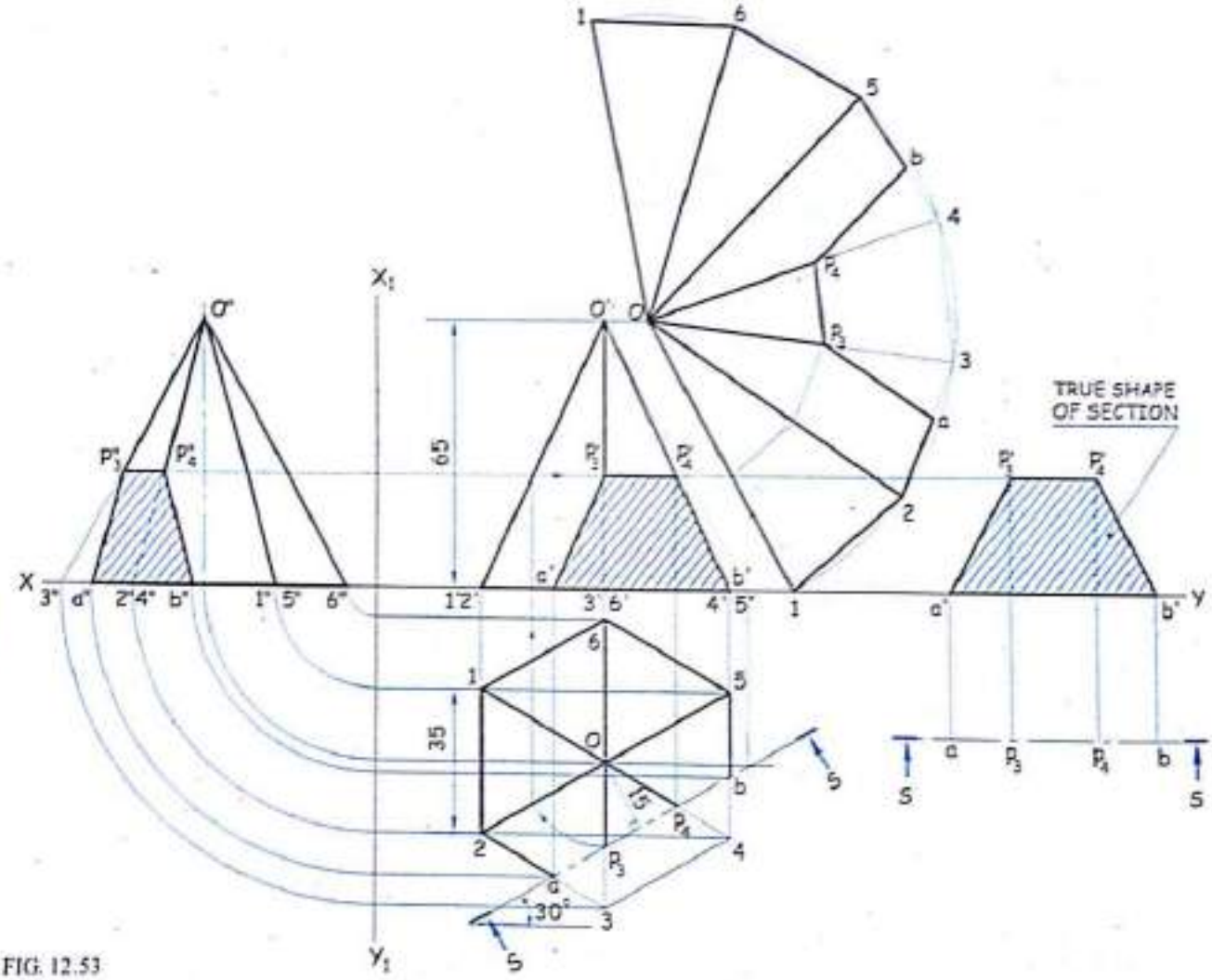

FIG. 12.53

Scanned by CamScanner

Problem 41

A hexagonal pyramid, base 25 mm and axis 65 mm long is resting on its base on the H.P. with two sides of base parallel to the V.P. It is cut by a section plane perpendicular to the V.P., inclined at 45° to the H.P. and intersecting the axis at a point 22 mm above the base. Draw the F.V., sectional T.V. and the true shape of a section. Also draw the development of lateral surface.

Solution

Refer figure 12.54.

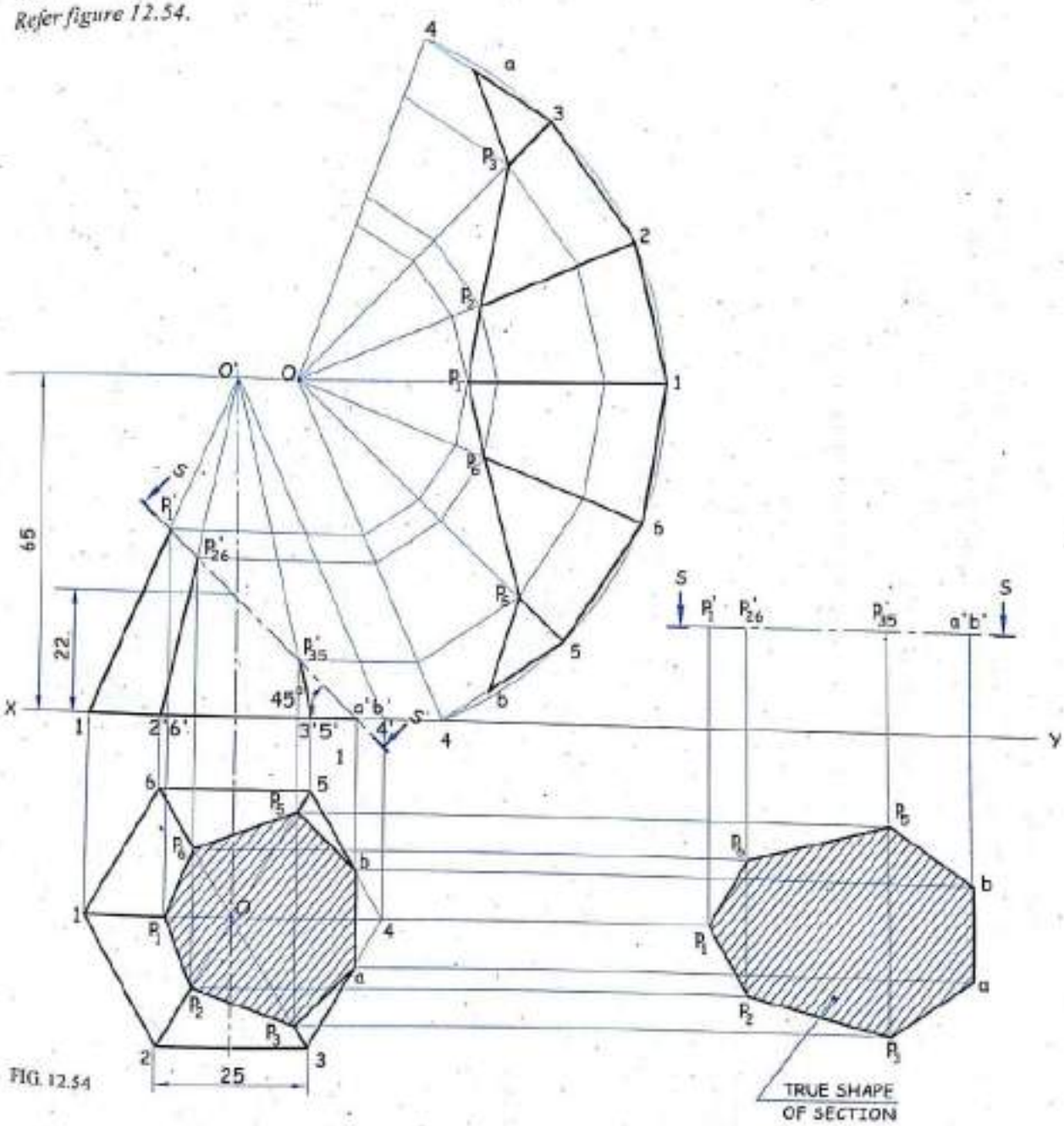

FIG. 12.54

Scanned by CamScanner

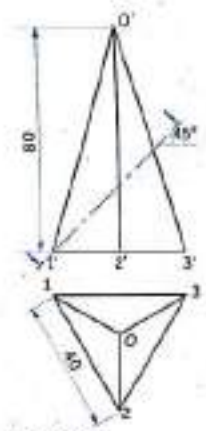

FIG. 12.55 (a)

Problem 42

Refer to *figure 12.55 (a)*. Use first angle method of projection. A triangalar pyramid is cut by cutting plane inclined at 45° to H.P. Draw the following views.

(a) Front view.
(b) Sectional left hand side view.
(c) True shape of the section.
(d) Development of the surface of the remaining surface.
(f) Top view.

Solution

Refer figure 12.55 (b).

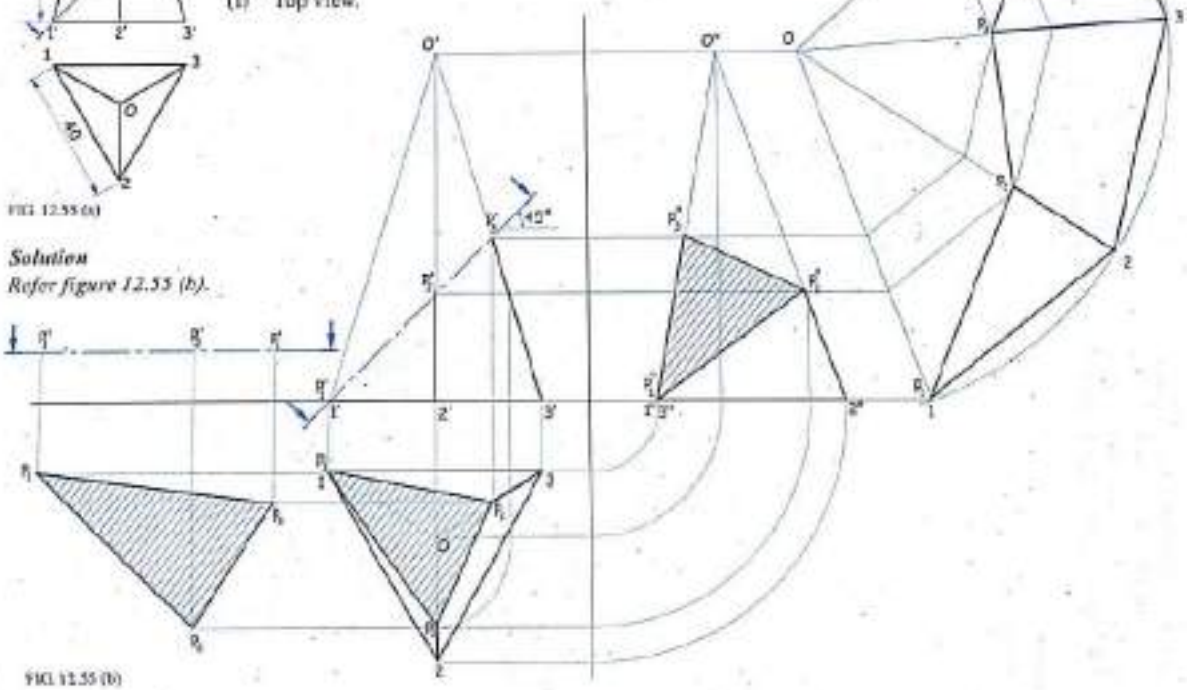

FIG. 12.55 (b)

Scanned by CamScanner

Problem 43

A square pyramid, side of base 40 mm and axis length 60 mm has one of its triangular face on the H.P. with axis parallel to the V.P. It is cut by an A.V.P. passing through the centre of gravity of a solid and inclined at 30° to the V.P. and removing the apex. Draw the sectional elevation, plan and show true shape of a section. Also draw the development of lateral surface.

Solution

Refer figure 12.56.

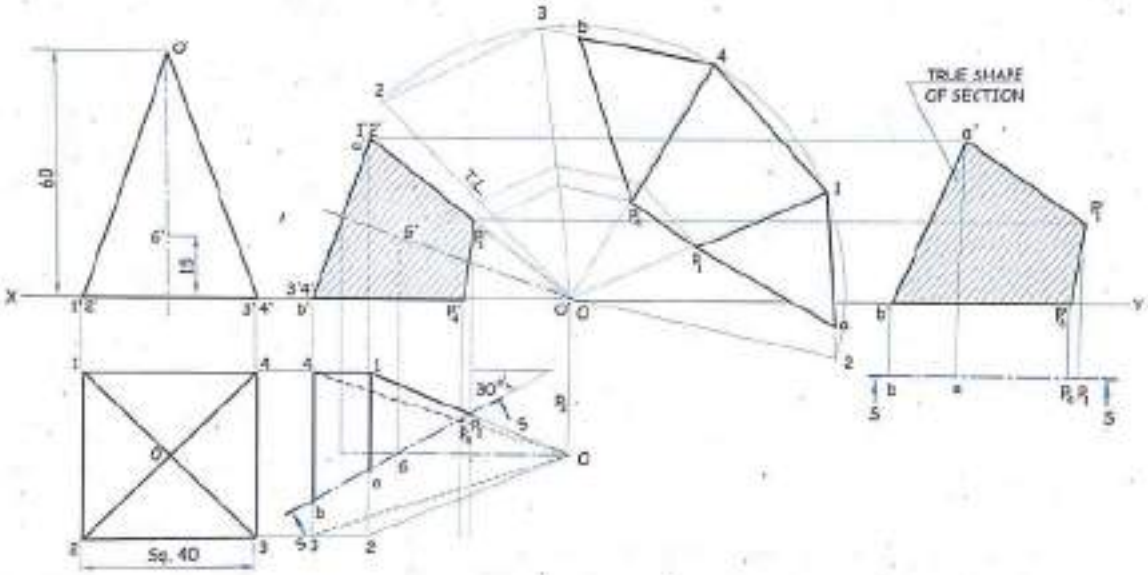

FIG. 12.56

Scanned by CamScanner

Problem 44

A pentagonal pyramid edge of base 40 mm long and height 75 mm is lying in the H.P. on the triangular face with an axis parallel to the V.P. It is cut by the section plane perpendicular to the H.P., inclined at 30° to the V.P. and bisecting the axis of a pyramid. Draw the sectional F.V., T.V. and the true shape of a section of the pyramid when the apex is retained. Also draw the development of lateral surface.

(May '12, M.U.)

Solution

Refer figure 12.57.

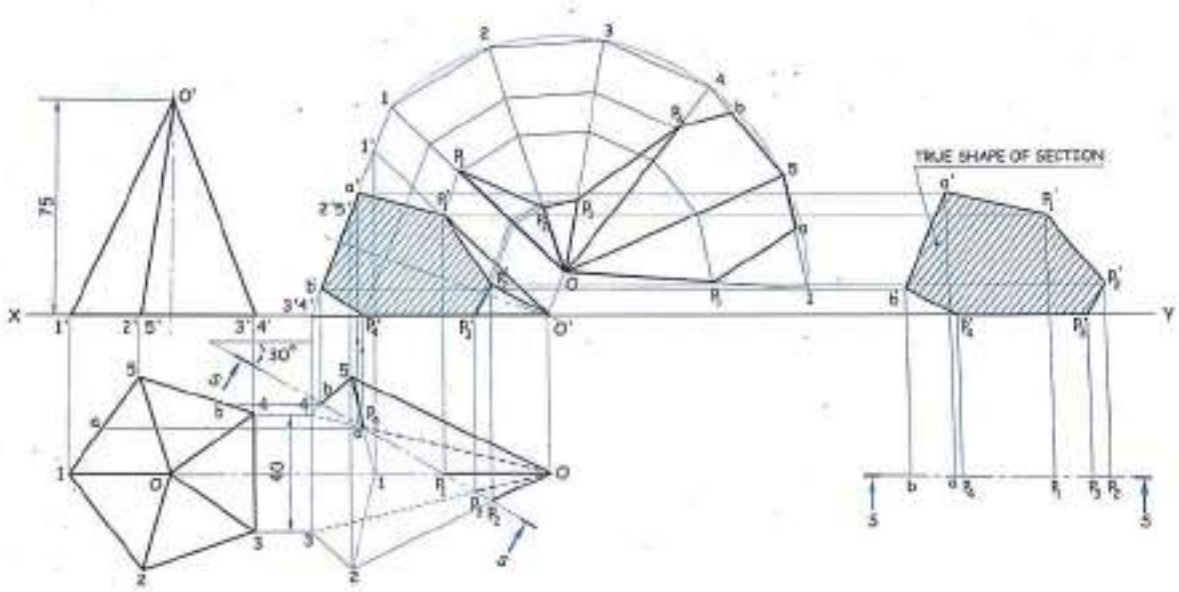

FIG. 12.57

Scanned by CamScanner

Problem 45

A pentagonal pyramid has its base in the V.P. and the edge of the base nearer to the H.P. is parallel to it. A section plane perpendicular to V.P. inclined at 45° to H.P., cuts the pyramid at a distance 6 mm from the axis. Draw the front view, sectional top view and draw development of the lateral surface of the remaining portion of the pyramid. Base of the pyramid 30 mm side, axis 50 mm long.

(May '03, M.U.)

Solution

Refer figure 12.58.

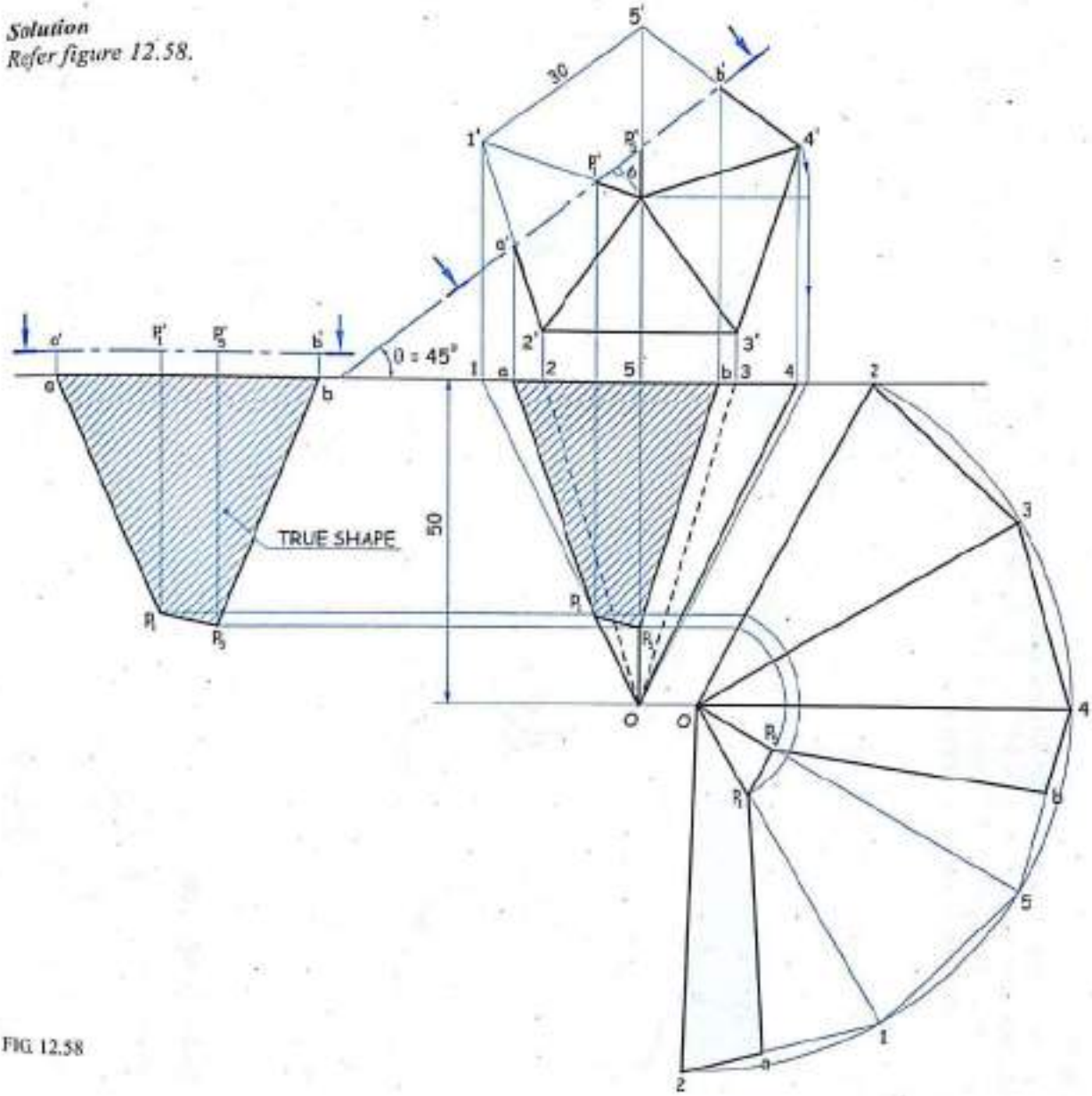

FIG. 12.58

Scanned by CamScanner

Problem 46

A right circular cone of base diameter 40 mm, axis height 50 mm has its base in the H.P. It is cut by auxiliary inclined plane which makes an angle 45° to the H.P. and passes through the point on the axis 20 mm below the apex. Draw the sectional T.V., sectional S.V., F.V. and the true shape of a section. *(Use first angle method.)* Develop the lateral surface of truncated cone.

Solution

Refer figure 12.59 (a) and (b).

FIG. 12.59 (a)

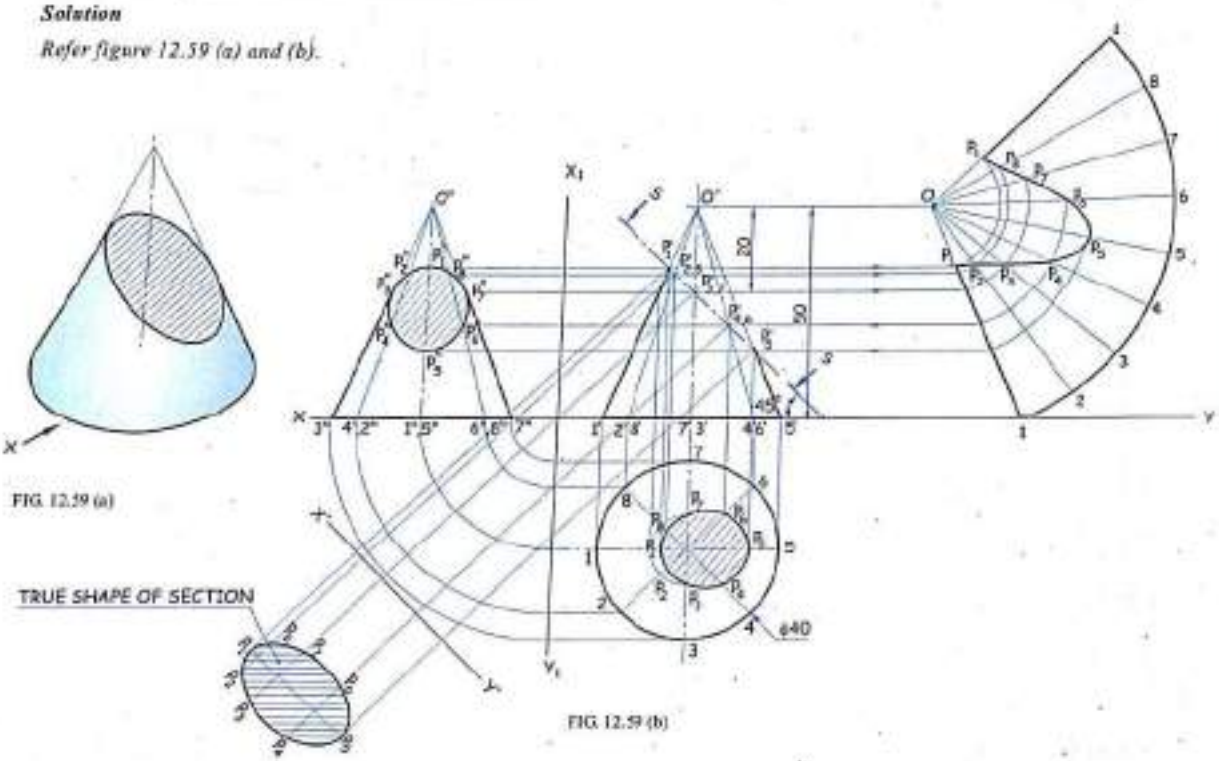

FIG. 12.59 (b)

Scanned by CamScanner

Problem 47

A cone, of base 70 mm diameter and axis 90 mm long is resting on its base on H.P. It is cut by a section plane perpendicular to V.P. and parallel to and 15 mm away from one of its end generators. Draw the Sectional T.V., F.V., Sectional S.V. and the true shape of a section. Also draw the development of lateral surface. *(Nov '94, M.U.)*

Solution

Refer figure 12.60 (a) and (b).

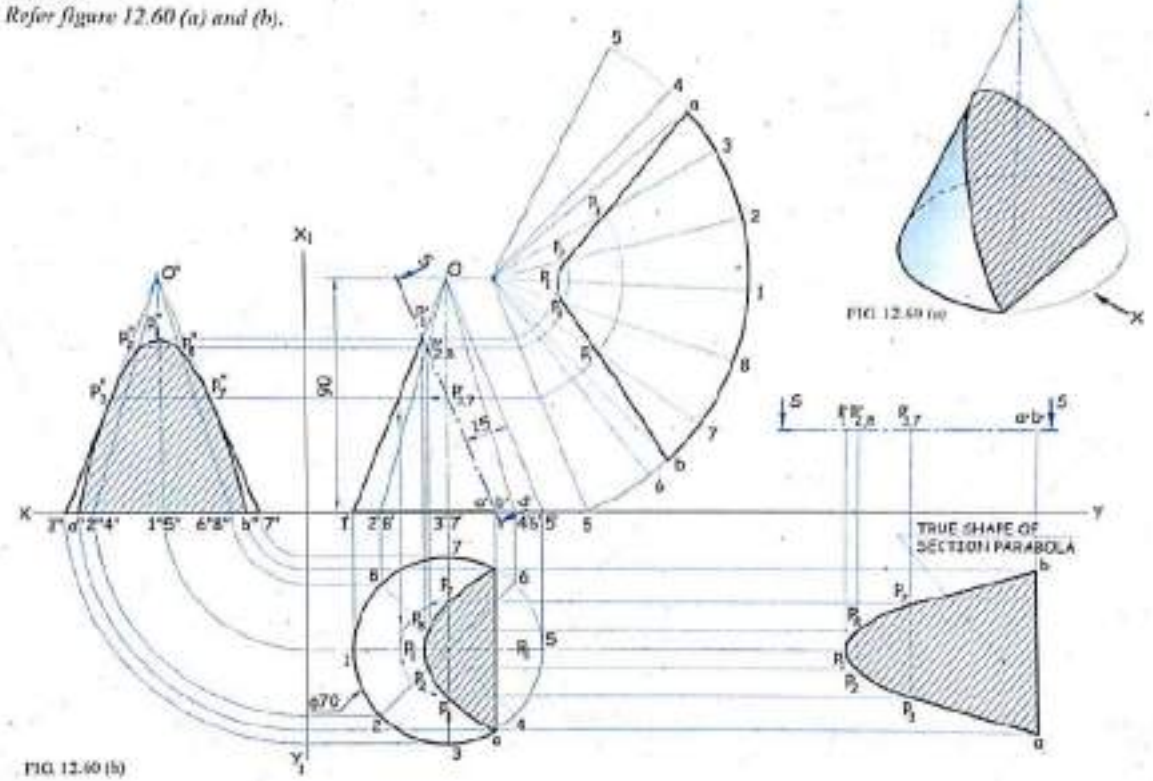

FIG. 12.60 (a)

FIG. 12.60 (b)

Scanned by CamScanner

Problem 48

A cone of base diameter 60 mm and axis height 75 mm is resting on the H.P. on one of its generators with axis parallel to the V.P. It is cut by Auxilary Inclined Plane (A.I.P.) such that the true shape of the section will be a parabola with the axis length equal to 60 mm. Draw the D.L.S. of cone removing the apex.

Solution : *Refer figure 12.61.*

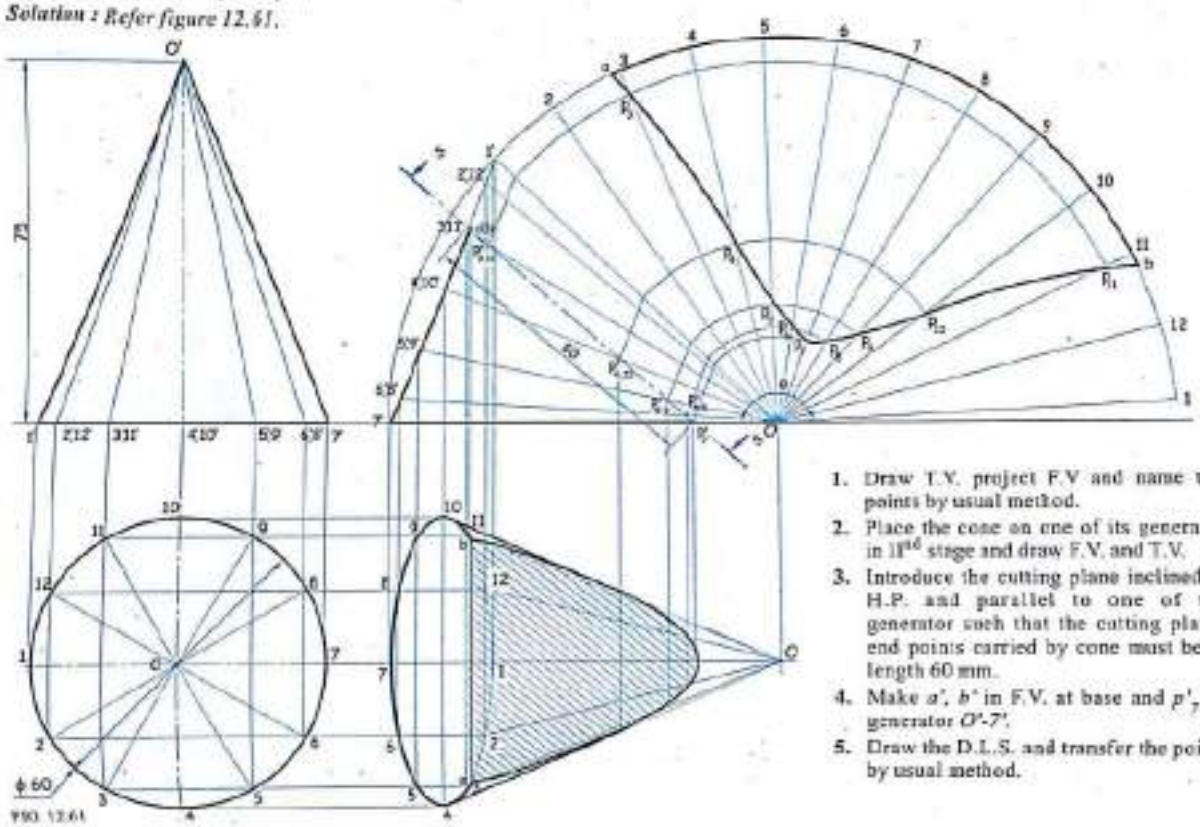

FIG. 12.61

1. Draw T.V. project F.V and name the points by usual method.
2. Place the cone on one of its generator in IInd stage and draw F.V. and T.V.
3. Introduce the cutting plane inclined to H.P. and parallel to one of the generator such that the cutting planes end points carried by cone must be of length 60 mm.
4. Make a', b' in F.V. at base and p'_7 on generator O'-$7'$.
5. Draw the D.L.S. and transfer the points by usual method.

Scanned by CamScanner

Problem 49

A cylinder, 30 mm diameter and 50 mm long stands vertically on its circular base. It is cut by an A.I.P. inclined at 45° to the H.P. which bisects a axis of a cylinder. Draw the sectional T.V., F.V., sectional S.V. and the true shape of a section. Also show the development of lateral surface of truncated cylinder.

Solution

Refer figure 12.62 (a) and (b).

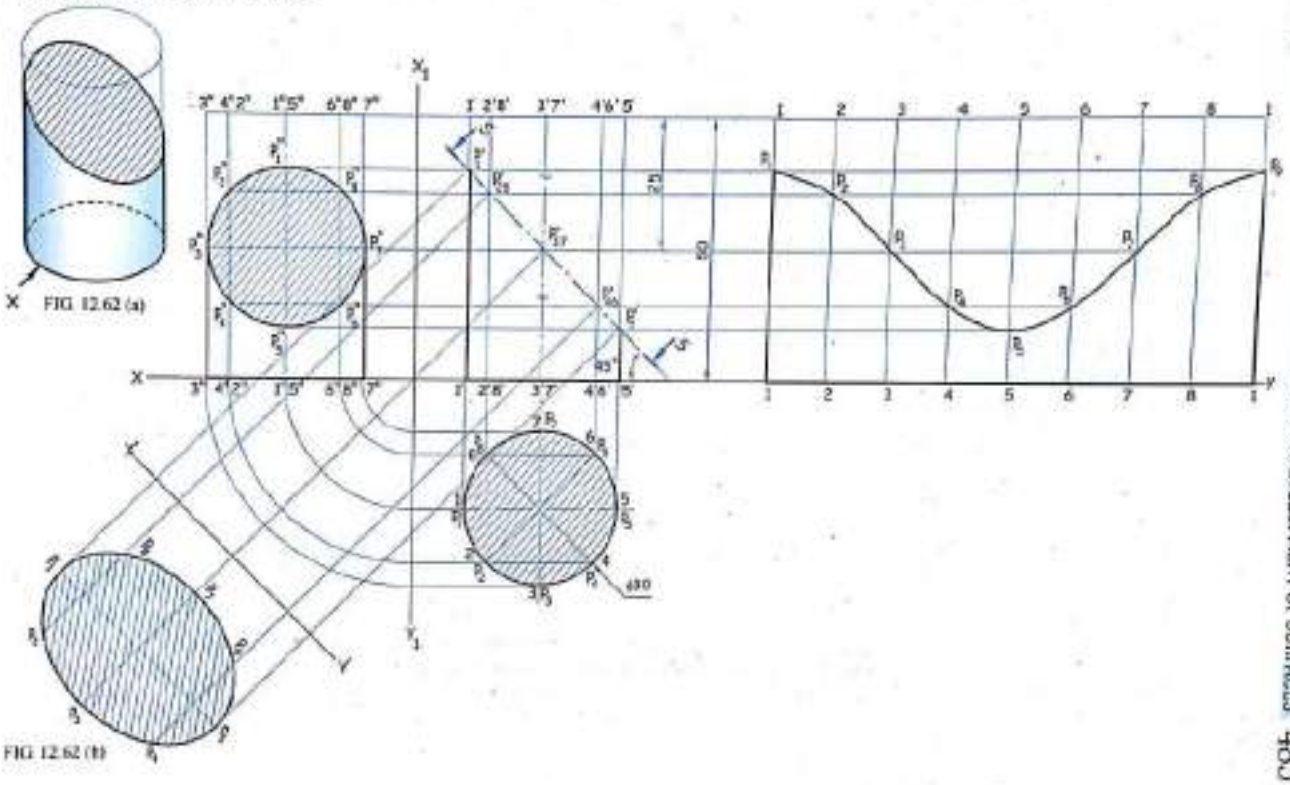

FIG. 12.62 (a)

FIG. 12.62 (b)

Scanned by CamScanner

Problem 50

Figure 12.63 (a) given below shows the front view of a cylinder with axis perpendicular to H.P. and parallel to V.P. It is cut by a cutting plane. The V.T. of the cutting plane is inclined at 45° to H.P. and perpendicular to V.P.

Given : Diameter of the base = 56 mm, Length of the axis = 60 mm

Draw the :

(i) Front View

(ii) Sectional Top view

(iii) True Shape of the Section

(iv) Development of the Lateral Surface.

Use the FIRST ANGLE method of projection.

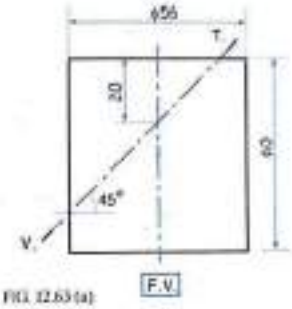

FIG. 12.63 (a)

Solution

Refer figure 12.63 (b).

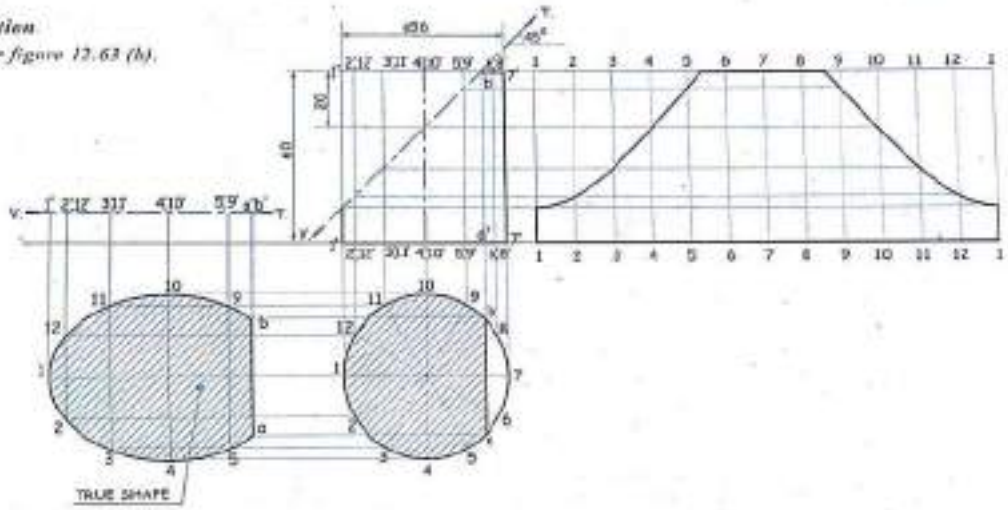

FIG. 12.63 (b)

Scanned by CamScanner

Problem 51

A cylinder of 60 mm diameter and 80 mm long stands with its circular base on the H.P. A section plane perpendicular to V.P. and inclined at 60° to H.P. cuts the axis at a point 20 mm from its top end. Draw the sectional top view, front view, sectional side view and the true shape of section. Also draw its development of lateral surface. ***(Dec. '06, M.U.)***

Solution

Refer figure 12.64.

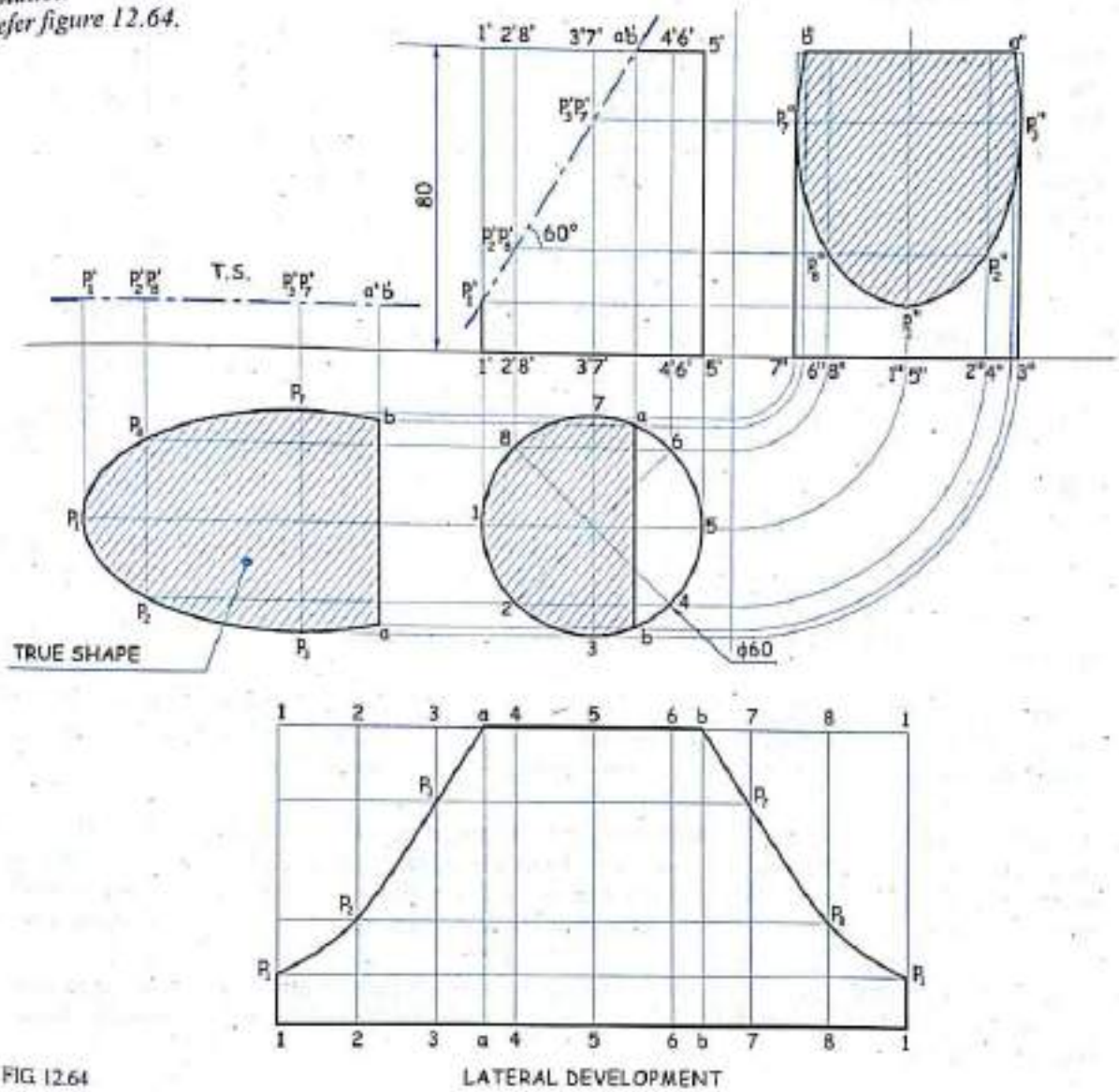

FIG. 12.64

Scanned by CamScanner

12.10 Exercise

Prism

1. A square prism of base 25 mm is resting on H.P. with it's faces equally inclined to V.P. Take length of axis of prism 50 mm. A circular hole of diameter 20 mm is drilled through it in the centre. Draw it's surface development.

2. *Figure 12.65* shows the elevation of triangular prism of 70 mm side of base and 80 mm in height resting on it's base on H.P. A open circular slot of 25 mm radius is cut through as shown. Draw the lateral surface development of the prism showing the slot in it.

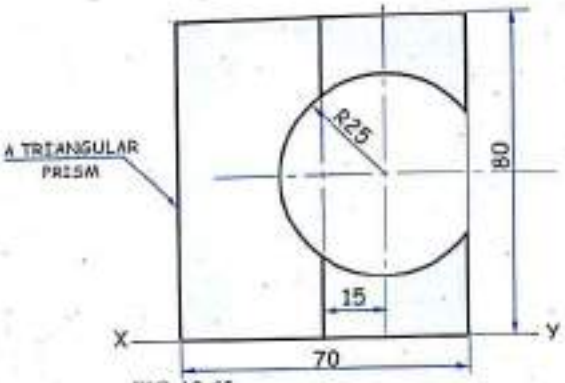

FIG. 12.65

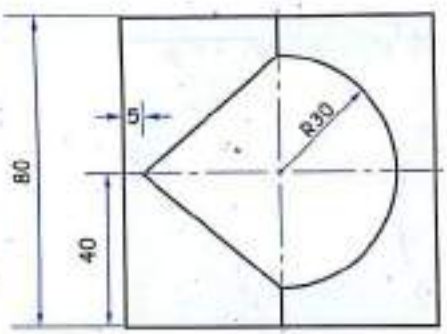

FIG. 12.66

3. *Figure 12.66* shows the front view of square prism of 50 mm side of base and 80 mm in height. A through slot is cut into it as shown. Draw the lateral surface development of the prism showing slot in it. Edges of base of square prism are equally inclined with V.P.

4. A pentagonal prism of 30 mm side of base and 64 mm length is lying on H.P. on one of its rectangular faces with the axis parallel to V.P. it is cut by a plane at 30° to V.P. and at right angles to H.P. bisecting its axis. Draw the views and show the surface development.

5. A regular pentagonal prism of side 40 mm and length of axis 75 mm is kept on the H.P. on its base with one of its rectangular face away from the observer and parallel to V.P. A thread is wound round the prism starting from the nearest corner of the base w.r.t. observer and is brought back to the top of the same vertical edge. Find the minimum length of thread and show it in the

6. A vertical pentagonal prism side of base 30 mm, axis length 70 mm has its one side of base parallel to V.P. and away from V.P. A circular hole of diameter 40 mm is drilled centrally. Draw the D.L.S. with hole.

7. A vertical pentagonal prism, having side of base 40 mm and axis 90 mm long is resting on ground with one edge of its base at 30° to the V.P. A cutting plane perpendicular to the V.P. and inclined at 30° to the H.P. passes through a point, 12 mm on axis from top pentagonal surface. It has a hole of 50 mm diameter drilled through it. The axis of the circular hole is perpendicular to the V.P. and parallel to the H.P. and intersects the axis of the pentagonal prism at a point 40 mm above bottom pentagonal base. Develop the lateral surface of the pentagonal prism.

Scanned by CamScanner

8. *Figure 12.67* is the F.V. and T.V. of triangular prism with semi-trepezoidal slot as shown. Draw the D.L.S. of prism.

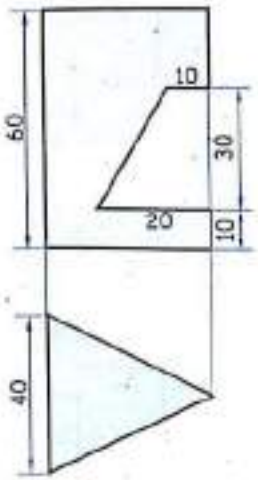

FIG. 12.67

9. *Figure 12.68* is the elevation and plan of square prism with hole (composed of rectangle and semicircle) as shown. Draw the D.L.S. of prism.

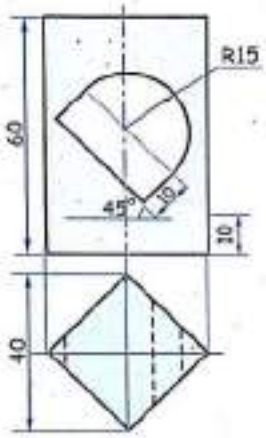

FIG. 12.68

10. *Figure 12.69* show the F.V. and T.V. of hexagonal prism with side of base 30 mm, axis height 75 mm. It is made to cut by two straight cutting planes and one curved cutting plane as shown. Show the effect of cutting plane in D.L.S. of prism.

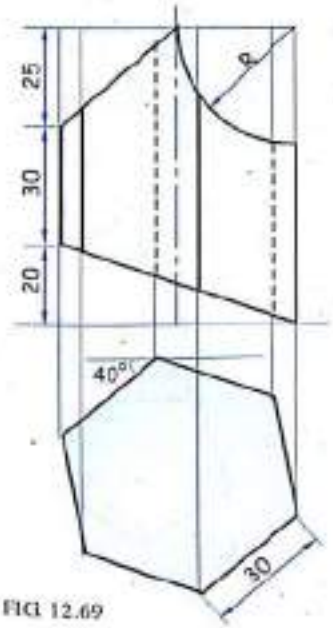

FIG. 12.69

11. *Figure 12.70* show the F.V. and T.V. of hexagonal prism with side of base 30 mm, axis height 75 mm. A circular hole is drilled horizontally having axis perpendicular to V.P., parallel to H.P. and bisects the axis. It touches tangentially to the two vertical edges as shown. Draw the D.L.S. with effect of hole.

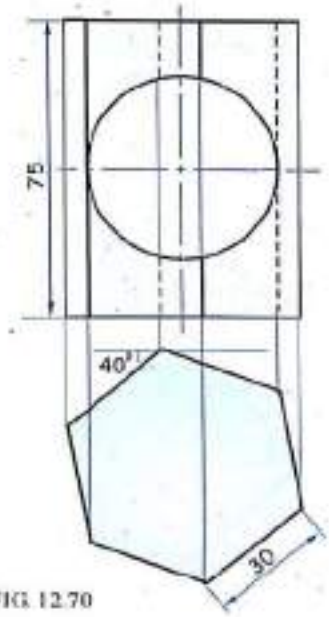

FIG. 12.70

Scanned by CamScanner

12. *Figure 12.71* shows front view of the cut prisms. Draw the development of retained portion of the prisms.

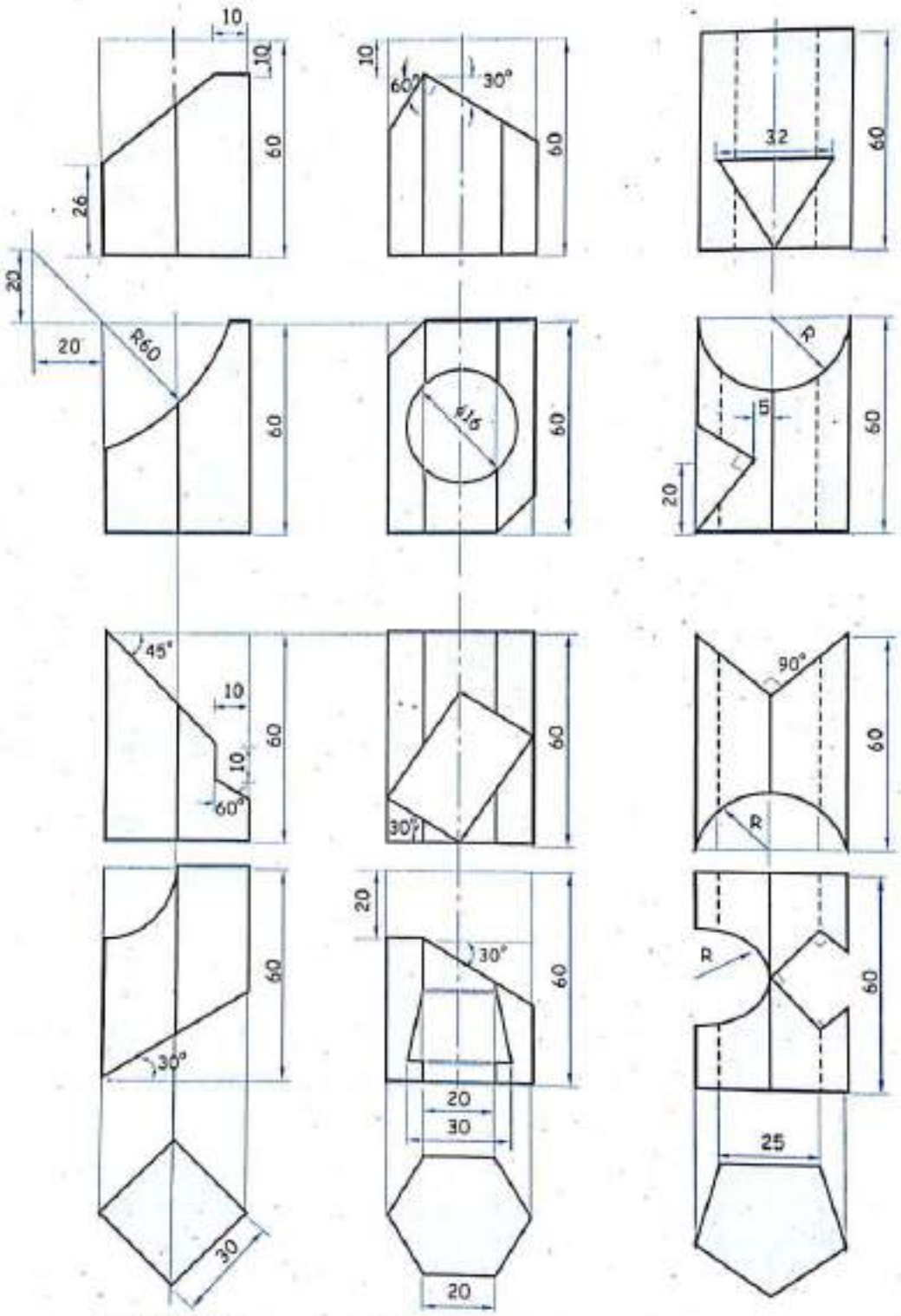

FIG. 12.71

Scanned by CamScanner

Cylinder

13. A cylinder 40 mm base diameter and 60 mm height is having square hole of sides 20 mm × 20 mm centrally. Axis of the square hole bisects the cylinder axis and is parallel to H.P. Draw the lateral surface development of cylinder with the hole (Assume edges of hole equally inclined to H.P.)

14. A right circular cylinder base 60 mm and axis 70 mm long is resting on it's base on the H.P. It is cut by the plane passing through the centre of axis and inclined at 45° to H.P. Draw the development of truncated cylinder.

15. A cylinder of 60 mm diameter of base and 80 mm in height is resting on it's base on H.P. It is cut by a section plane normal to V.P. and inclined to H.P. The section plane passes through the extreme left bottom base and extreme right top base of the elevation. Draw the lateral surface development of the truncated part of the cylinder.

16. A cylinder of 60 mm and 100 mm in height is resting on it's base in H.P. A triangular hole of 60 mm side is cut through it in such a way that axis of the hole bisects the axis of the cylinder at right angles & is perpendicular to V.P.. Develop the lateral surface of the cylinder showing the hole in it (Assume flat faces of trianglular hole is parallel to axis of cylinder.)

17. A cylinder 10 cm high and diameter of base 6 cm is kept vertically. It is cut by two plane perpendicular to the V.P. and inclined at 45° to H.P. Each plane passes through a point on axis one cm from top and bottom respectively. Develop the curved surface of middle part of cylinder.

18. The paper with shown cut-out is to be wrapped around a cylinder. Plot the outer edge of the paper in F.V. of cylinder. [circumference = 176, height = 88] *Refer figure 12.72.*

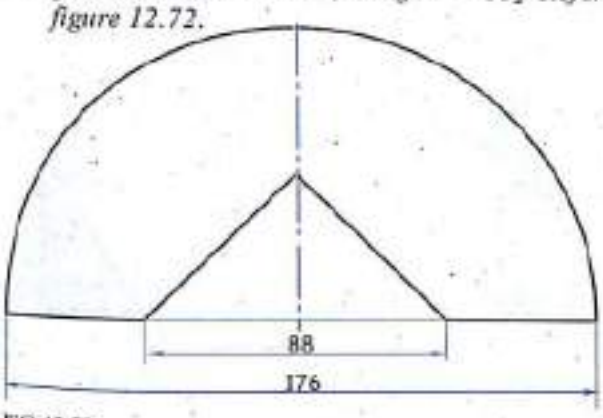

FIG. 12.72

19. The *figure 12.73* given below shows the front view of the cylinder of 60 mm diameter of base and 70 mm in height. An equilateral triangular slot is cut right through it as shown. Draw the lateral surface development of the cylinder.

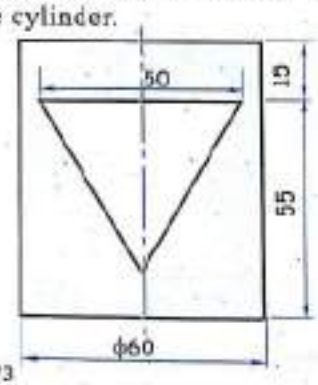

FIG. 12.73

20. *The given figure 12.74* shows the cylindrical 90° elbow. Develop pieces 'A' or 'C' and 'B'.

Elbow : An elbow is a connection of two or more pieces fastened together to make an angle of 90°.

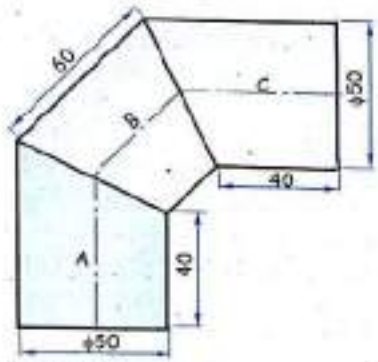

FIG. 12.74

Scanned by CamScanner

21. F.V. of a cylinder of 50 mm diameter and axis height 80 mm are cut in different ways as shown in *figure 8.75*. Draw the D.L.S. of retained portion of cylinder.

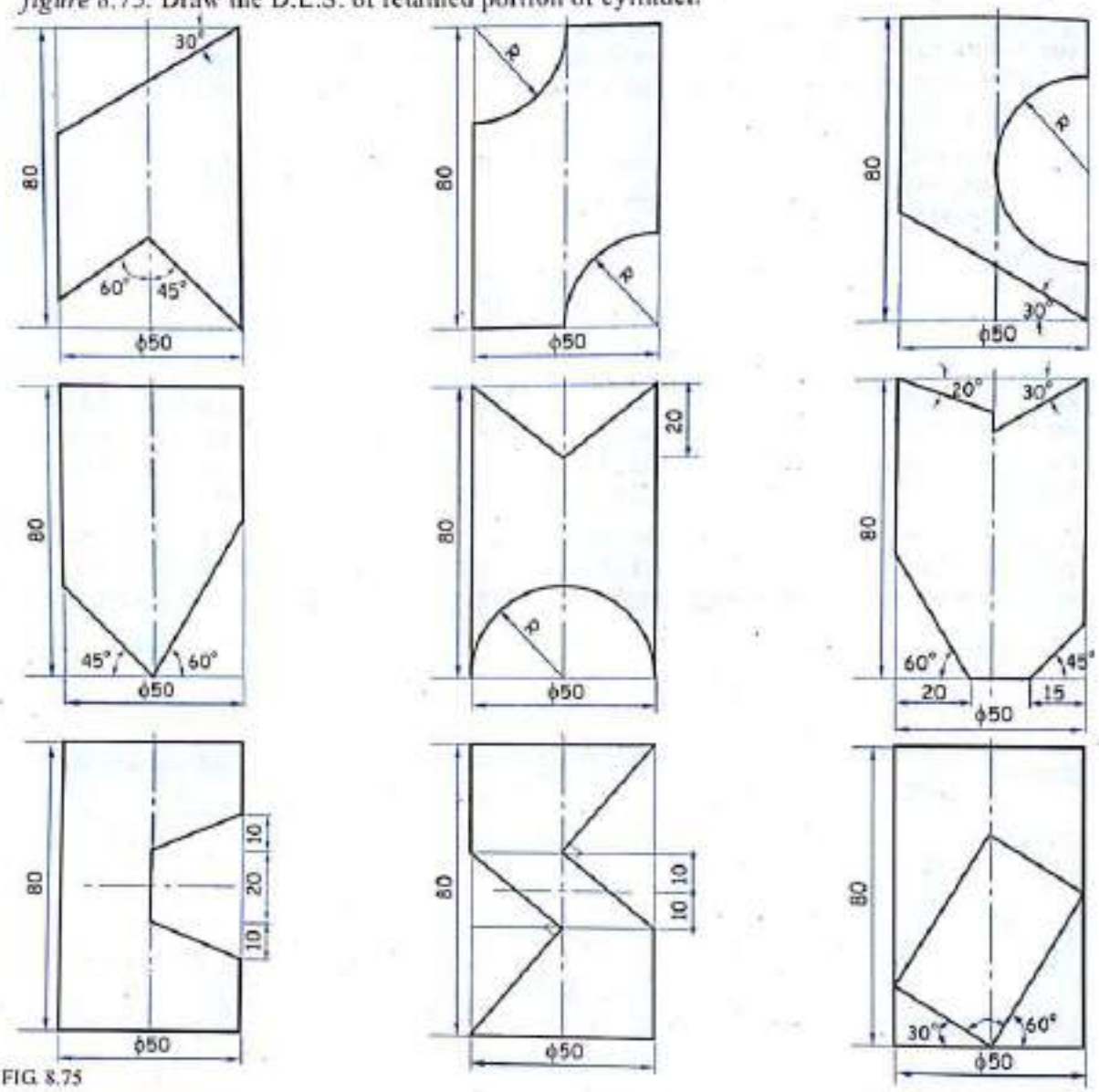

FIG. 8.75

22. A cylinder of base diameter 60 mm and height 100 mm long is lying on the ground with its axis parallel to V.P. and perpendicular to H.P. It has a square hole cut through the curved surface of the cylinder such that the axis of the square hole is parallel to H.P. and perpendicular to V.P. The axis of he square hole is 10 mm away from the axis of the cylinder and towards the right of the observer and 50 mm above the ground. The base edges of the square hole are equal to 40 mm. A flat face of the square hole which is nearer to H.P. makes angle of 30° to it. Using 1:1 scale develop the lateral surface of the cylinder showing square hole on it, such that the square hole appears at the center of the developed part of the cylinder. *(Nov.' 85)*

23. A cylinder of 70 mm diameter of base and axis 90 mm long rests on its base with axis perpendicular to H.P. A square hole of 30 mm sides is cut through the cylinder. The axis of the hole is perpendicular to the V.P., 10 mm away from and on the right of the axis of the cylinder and 45 mm above the base of the cylinder. Draw the front view, top view and the right hand side view of the cylinder showing curves of intersection is two side faces of the hole are inclined at 30° to the H.P. Draw the development of the lateral surface of the cylinder with the square hole.

Scanned by CamScanner

24. A square pyramid side base 30 mm and axis 70 mm long resting on it's base with one side of base perpendicular to V.P. It is cut by a cutting plane perpendicular to V.P. and inclined 60° to H.P. passing from the midpoint of the axis. Draw the development of cut pyramid.

25. A pentagonal pyramid side base 40 mm and axis 90 mm long resting on it's base on the H.P. with one side of the base parallel to V.P. and near to it. A horizontal circular hole of diameter 36 mm is drilled through it such that the axis of the hole is perpendicular to V.P. and parallel to H.P. The axis of the hole is intersecting the axis of pyramid at right angle is 30 mm above the base pyramid. Develop the lateral surface of pyramid showing circular hole on it.

26. A hexagonal pyramid base 30 mm side and axis 65 mm long has it's base on the H.P. with one side of the base parallel to V.P. A vertical section plane inclined at 60° to V.P. cuts the pyramid at a distance 10 mm from it's axis. Draw the development of the lateral surface of pyramid.

27. A tetrahedron of 70 mm edge stands on a face on the H.P. with an edge contained by that face parallel to V.P. A vertical section plane inclined at 30° to V.P. and 10 mm away from the axis cuts the tetrahydron. Draw the development of the lateral surface of tetrahydron.

28. A square pyramid of base 60 mm side and height 80 mm is kept vertically on H.P. with sides of the base equally inclined to V.P. It is cut by the plane perpendicular to V.P. and inclined at 45° to the H.P. and passing through the midpoint of the axis. Draw the development of the bottom remaining part of the pyramid.

29. A pentagonal pyramid 60 mm high and 25 mm each side of base stands vertically with rear side of base parallel to the V.P. It is cut by the plane perpendicular to V.P. and inclined at 60° to the H.P. and passing through the point on the left hand side sloping edge 20 mm vertically below the apex. Draw the development of lateral surface of the major part of the pyramid.

30. A pentagonal pyramid, side of base 30 mm length of axis 70 mm stands on one of it's triangular faces on the H.P. with the axis parallel to V.P. A plane perpendicular to H.P. and inclined at 30° to the V.P. cuts the pyramid passing through a point on the axis 30 mm from the base. Draw the development of the pyramid containing the apex.

31. A triangular pyramid, edge of base 60 mm and height 70 mm stands on it's base on H.P. with one edge of base parallel to V.P. and away from the observer. A square hole of 25 mm sides is cut into the pyramid so that the axis is perpendicular to H.P. and 25 mm above the base. Draw the D.L.S if one of the rectangular faces of square hole inclined at 30° to H.P.

32. An equilateral triangular pyramid of 60 mm side of base and 60 mm height has its base on the H.P. with an edge of base parallel to V.P. it has a square slot of 20 mm sides made through it such that the axis of the slot is perpendicular to V.P. and intersects the axis of the pyramid at 20 mm from the base. All rectangular faces of the hole are equally inclined to H.P. Develop the lateral surface of the pyramid. Also show the effect of hole in T.V.

33. An equilateral triangular pyramid edge of base and 60 mm and height 70 mm stands on its base on the H.P. with one edge of base parallel to V.P. and away from the observer. A square slot of 25 mm side is cut into the pyramid so that the axis of the hole is perpendicular to V.P. and intersects the axis of the pyramid at 20 mm above the base. The sides of hole are parallel to H.P. Develop the lateral surface of the pyramid. Complete the plan.

34. An pentagonal pyramid of 30 mm edge of base and 65 mm length of axis stands on its base with an edge of base parallel to V.P. and away from the observer. A string starting from the mid-point M of the edge of the base parallel to the V.P. is wound around the slant faces of the solid and brought back to the starting point. If the length of string is to be minimum, show the position of string on plan and elevation.

35. An equilateral triangular pyramid of 60 mm edge of base and 60 mm length of axis has a co-axial circular hole of 30 mm diameter. The pyramid stands on its base with an edge of base parallel to V.P. and away from the observer. Draw three views of the pyramid and also draw the development of its lateral surface.

Scanned by CamScanner

36. A frustum of a pyramid with a hexagonal base 50 mm side, top 20 mm and height 80 mm rests on its base with one edge of base parallel to the V.P. A horizontal circular hole of 50 mm diameter is drilled through the frustrum such that its axis is perpendicular to V.P. and bisects the axis of the frustrum. Draw the development of the pyramid frustrum having the hole. *(April '85)*

37. The frustrum of a hexagonal pyramid rests on its larger base on ground with its two edges of the base parallel to V.P. The edge of the bottom hexagonal base measures 40 mm and the edge of the top hexagonal base measures 20 mm. The height is 60 mm. Draw the development of the lateral surface of the given frustrum of a hexagonal pyramid.

38. An ant sitting at one of the corners of the bottom base of the above frustrum moves along the lateral surface of the frustrum and returns to its original starting point by the shortest path. Show this path of shortest path in front view and top view of the frustrum of a hexagonal pyramid.

39. *The figure 12.76* given below shows the front view of a hexagonal pyramid standing on its base with two sides of base perpendicular to V.P. A slot is cut through as shown. Develop the lateral surface of the pyramid.

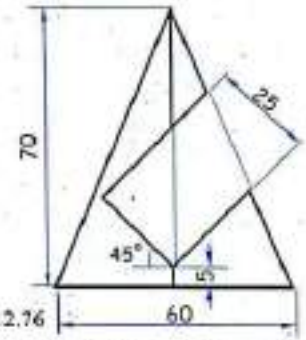

FIG. 12.76

40. *Figure 12.77* given below shows the front view of a triangular pyramid resting on its base in the H.P. having a hole as shown. Develop the lateral surface of the pyramid.

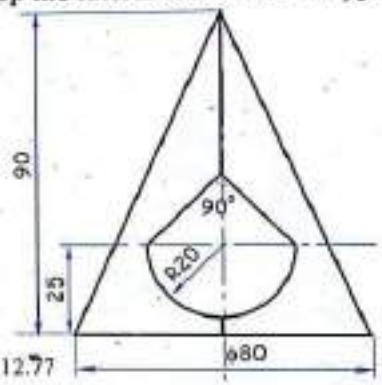

FIG. 12.77

41. *Figure 12.78* given below shows the F.V. of a hexagonal pyramid side of base 20 mm and height 40 mm drilled by a rectangular hole of size 25 mm × 10 mm, one of the sides of base of the pyramid is parallel to V.P.

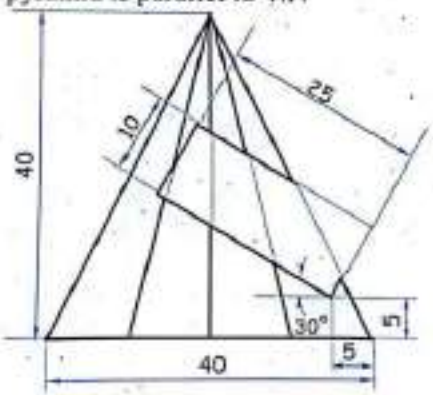

FIG. 12.78

42. *Figure 12.79* given below shows the F.V. of a pentagonal pyramid with side of base 20 mm parallel to V.P. and axis length 40 mm. It has a semicircular slot as shown. Draw the D.L.S.

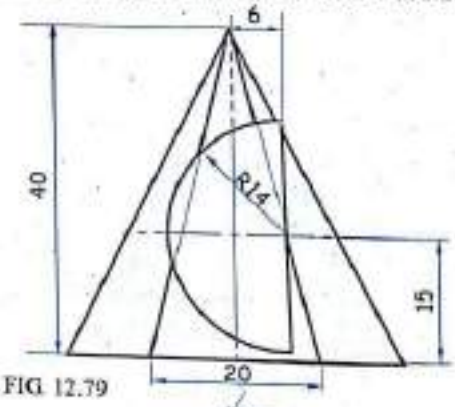

FIG. 12.79

43. *Figure 12.80* shows the D.L.S. of triangular pyramid with semicircle mark in it. If one edge of base is parallel to and away from V.P. draw the F.V. and T.V. showing the mark of semicircle in it.

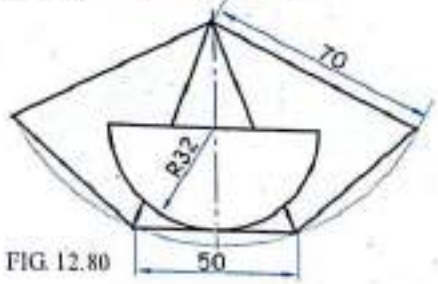

FIG. 12.80

Scanned by CamScanner

44. Following *figures 12.81* shows F.V. of the cut pyramids. Draw the D.L.S. of retained portion.

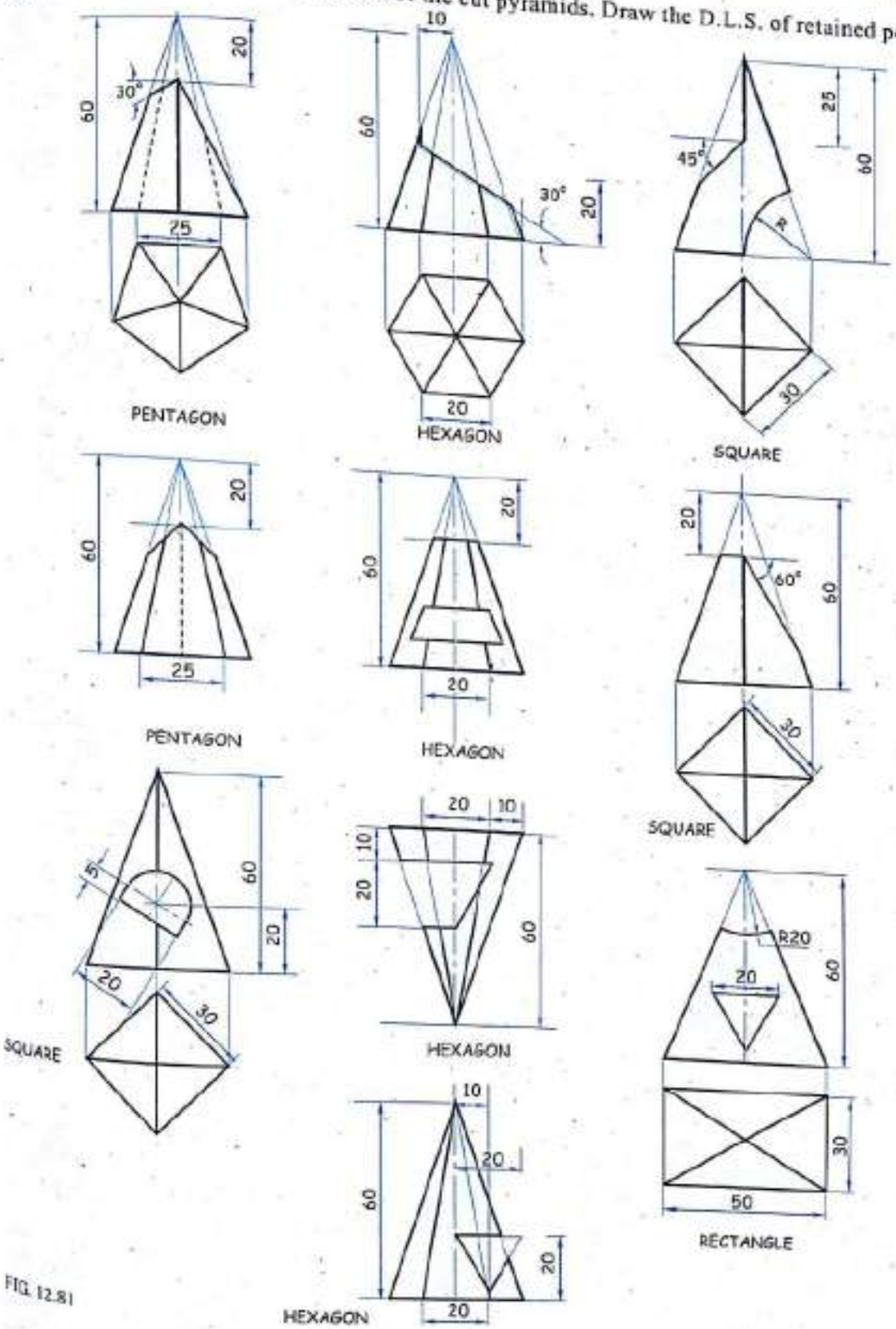

FIG. 12.81

Scanned by CamScanner

Cone

45. A vertical cone, base 90 mm diameter and axis 90 mm long has a square hole of 30 mm side cut through it. The axis of hole is perpendicular to V.P. and intersect the axis of the cone 30 mm above the base. The axis of the square hole is perpendicular to V.P. and intersects the axis of cone 30 mm above the base. The faces of square hole are equally inclined to H.P. Draw the development of lateral surface of cone.

46. A cone of 60 mm base diameter and 80 mm height is resting on it's base on H.P. A circular hole of 30 mm diameter is drilled in the cone, such that, the axis of the hole is parallel to H.P. and perpendicular to V.P. and intersects the cone axis at a distance of 30 mm from the cone base. Draw the lateral surface development of cone with hole.

47. A cone of base 60 mm diameter and axis 80 mm long is resting on H.P. on it's base. It is cut by cutting plane perpendicular to H.P. and V.P. both passing through 10 mm distance from the axis of cone. Draw the development of cut cone.

48. A right circular cone of 90 mm diameter and 100 mm axis is resting on it's base on the H.P. It is cut by an equilateral triangular slot of 40 mm side so that axis of the slot is perpendicular to V.P. and parallel to H.P. and at the height of 40 mm above the base of cone. One rectangular face of triangular slot is parallel to base of the cone. Draw the development of lateral surfaces of cut cone.

49. A circular cone base 75 mm diameter and axis 90 mm long has it's base on the H.P. A vertical plane inclined at 30^0 to V.P. cuts the cone at a distance 15 mm away from it's axis. Draw the development of the lateral surface of cone.

50. A cone base 70 mm diameter axis 80 mm long is resting on its base on the H.P. and is cut by a plane parallel to V.P. perpendicular to H.P. and at a distance of 12 mm in front of the axis of the cone. Draw the development of remaining portion of the cone.

51. A cone of 50 mm diameter and 65 mm length of axis is lying on one of its generator's on the H.P. with the axis parallel to V.P. it is cut by a plane perpendicular to H.P. and inclined at 45° to V.P. cutting the axis at 25 mm from the base. Draw the development of the part of the cone containing the apex.

52. A cone of diameter of base 70 mm and height 80 mm stands vertically with its base on the H.P. A triangular hole whose sides equal to 30 mm in length is cut through the cone. The axis of hole is horizontal and perpendicular to the V.P. one side of hole (30 mm) contains the axis of the cone and the lowest corner of the hole in elevation in 20 mm above the base of the cone. Draw the development of the cone with the hole.

53. A cone of diameter of base 70 mm and height 80 mm stands vertically with its base on the H.P. A triangular hole whose sides are equal to 30 mm in length is cut through the cone. The axis of hole is horizontal and perpendicular to the V.P. one side of hole (30 mm) contains the axis of the cone and the lowest corner of the hole in elevation in 20 mm above the base of the cone. Draw the development of the cone with the hole.

54. A circular cylinder of 60 mm diameter of base and 80 mm height is standing on it's base. A hole of 54 mm diameter is drilled through out in such a way that the axis of the hole is parallel to H.P. and perpendicular to V.P. bisecting the axis of the cylinder. Draw the front view, top view and development of the lateral surface of the cylinder. *(May '81)*

55. A semi-cone 80 mm diameter and 90 mm axis length rests on its semicircular base so that triangular face is parallel to the V.P. and away from the observer. A point P at the base of the semi-cone travels on lateral surface of the solid and returns back to the same point by the shortest path. Show the path of the point P in front and top view. *(Dec. '89)*

Scanned by CamScanner

56. F.V. of the cone of 50 mm diameter and axis length 65 mm are cut in different ways as shown in *figure 12.82*. Draw the D.L.S. of retained portion of cone.

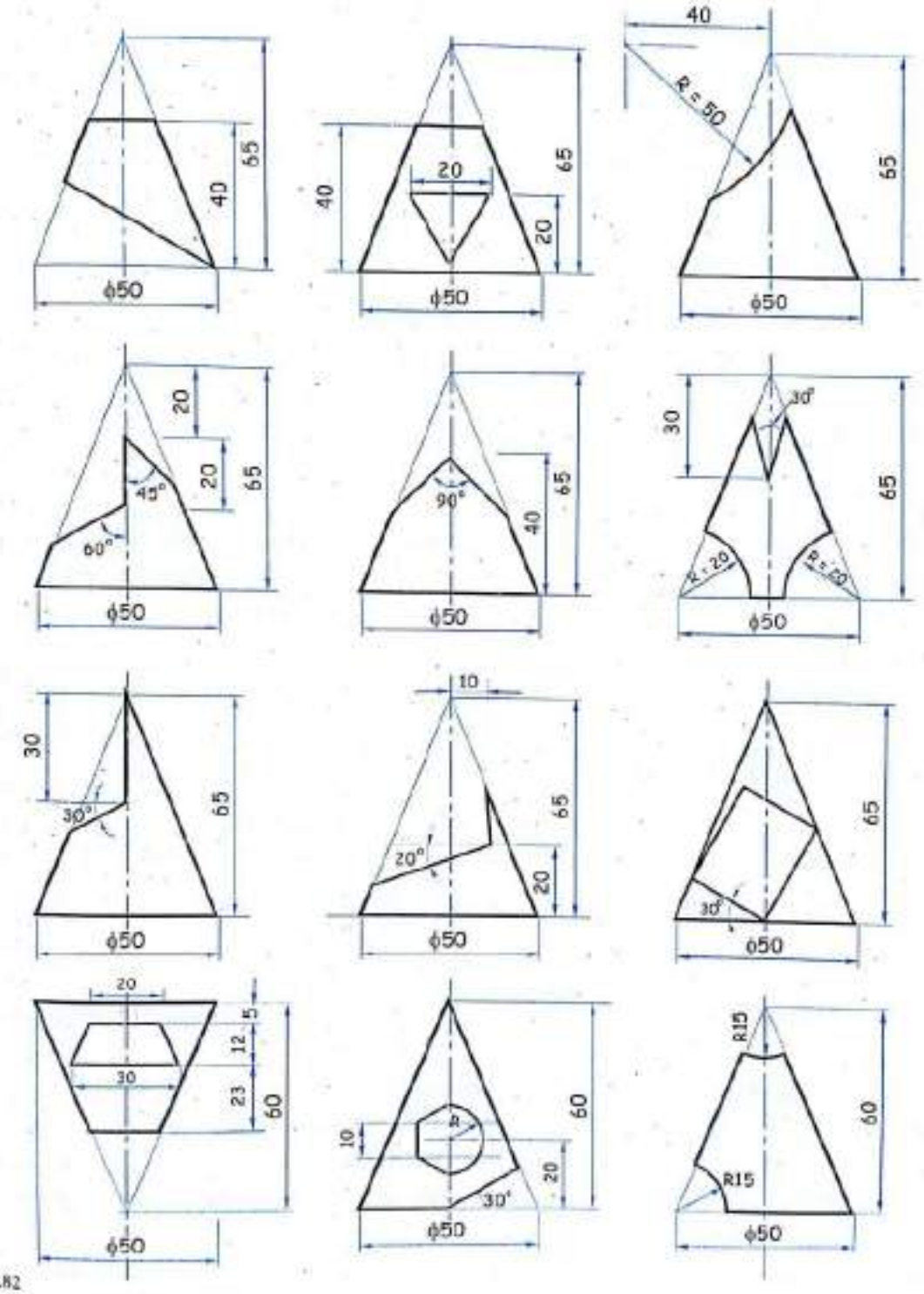

FIG. 12.82

Scanned by CamScanner

Cone

45. A vertical cone, base 90 mm diameter and axis 90 mm long has a square hole of 30 mm side cut through it. The axis of hole is perpendicular to V.P. and intersect the axis of the cone 30 mm above the base. The axis of the square hole is perpendicular to V.P. and intersects the axis of cone 30 mm above the base. The faces of square hole are equally inclined to H.P. Draw the development of lateral surface of cone.

46. A cone of 60 mm base diameter and 80 mm height is resting on it's base on H.P. A circular hole of 30 mm diameter is drilled in the cone, such that, the axis of the hole is parallel to H.P. and perpendicular to V.P. and intersects the cone axis at a distance of 30 mm from the cone base. Draw the lateral surface development of cone with hole.

47. A cone of base 60 mm diameter and axis 80 mm long is resting on H.P. on it's base. It is cut by cutting plane perpendicular to H.P. and V.P. both passing through 10 mm distance from the axis of cone. Draw the development of cut cone.

48. A right circular cone of 90 mm diameter and 100 mm axis is resting on it's base on the H.P. It is cut by an equilateral triangular slot of 40 mm side so that axis of the slot is perpendicular to V.P. and parallel to H.P. and at the height of 40 mm above the base of cone. One rectangular face of triangular slot is parallel to base of the cone. Draw the development of lateral surfaces of cut cone.

49. A circular cone base 75 mm diameter and axis 90 mm long has it's base on the H.P. A vertical plane inclined at 30° to V.P. cuts the cone at a distance 15 mm away from it's axis. Draw the development of the lateral surface of cone.

50. A cone base 70 mm diameter axis 80 mm long is resting on its base on the H.P. and is cut by a plane parallel to V.P. perpendicular to H.P. and at a distance of 12 mm in front of the axis of the cone. Draw the development of remaining portion of the cone.

51. A cone of 50 mm diameter and 65 mm length of axis is lying on one of its generator's on the H.P. with the axis parallel to V.P. it is cut by a plane perpendicular to H.P. and inclined at 45° to V.P. cutting the axis at 25 mm from the base. Draw the development of the part of the cone containing the apex.

52. A cone of diameter of base 70 mm and height 80 mm stands vertically with its base on the H.P. A triangular hole whose sides equal to 30 mm in length is cut through the cone. The axis of hole is horizontal and perpendicular to the V.P. one side of hole (30 mm) contains the axis of the cone and the lowest corner of the hole in elevation in 20 mm above the base of the cone. Draw the development of the cone with the hole.

53. A cone of diameter of base 70 mm and height 80 mm stands vertically with its base on the H.P. A triangular hole whose sides are equal to 30 mm in length is cut through the cone. The axis of hole is horizontal and perpendicular to the V.P. one side of hole (30 mm) contains the axis of the cone and the lowest corner of the hole in elevation in 20 mm above the base of the cone. Draw the development of the cone with the hole.

54. A circular cylinder of 60 mm diameter of base and 80 mm height is standing on it's base. A hole of 54 mm diameter is drilled through out in such a way that the axis of the hole is parallel to H.P. and perpendicular to V.P. bisecting the axis of the cylinder. Draw the front view, top view and development of the lateral surface of the cylinder. *(May '81)*

55. A semi-cone 80 mm diameter and 90 mm axis length rests on its semicircular base so that triangular face is parallel to the V.P. and away from the observer. A point P at the base of the semi-cone travels on lateral surface of the solid and returns back to the same point by the shortest path. Show the path of the point P in front and top view. *(Dec. '89)*

Scanned by CamScanner

56. F.V. of the cone of 50 mm diameter and axis length 65 mm are cut in different ways as shown in *figure 12.82*. Draw the D.L.S. of retained portion of cone.

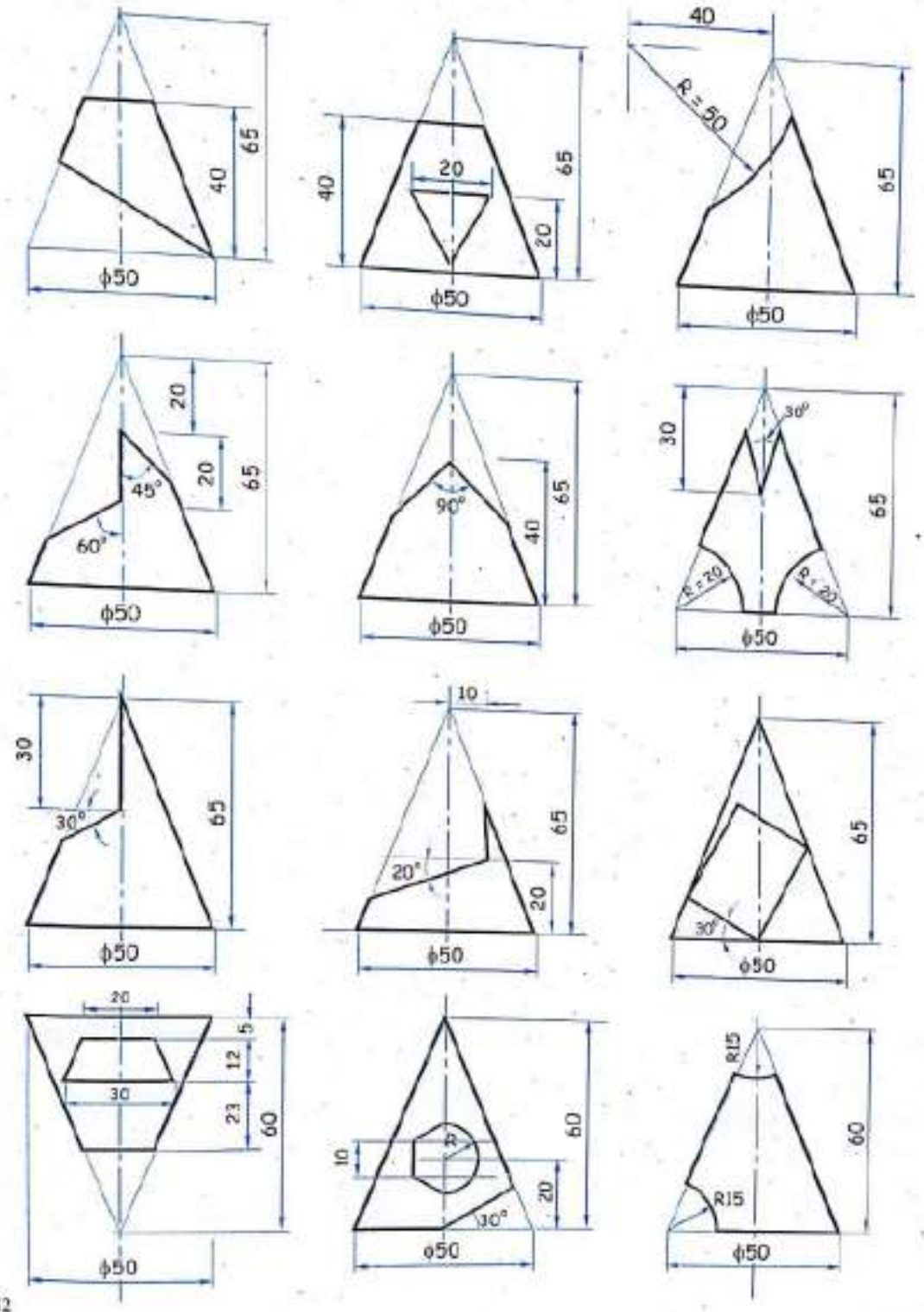

FIG. 12.82

Scanned by CamScanner

13 READING ORTHOGRAPHIC PROJECTIONS

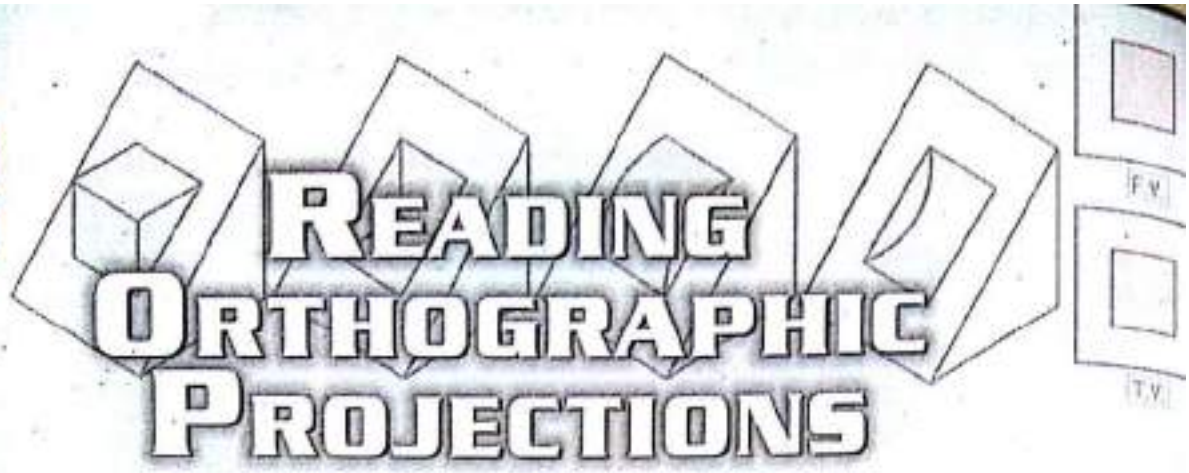

13.1 Introduction to Reading Orthographic Projections

It is assumed that, observer is at infinity and direction of projectors are perpendicular to the plane of projection. The pictorial view of an object can not describe the exact shape and size of several features. To provide this information clearly and precisely, a number of views of the object are systematically arranged. This system of views is known as orthographic projections. ***Reading Orthographic Projection*** *is also known as* ***Missing Views.***

We have seen how to draw orthographic projections from the pictorial view in chapter 4 and also how to draw pictorial view from the orthographic views in chapter 6. When two views are given it can be correlated to imagine the complete object and third view is possible to add. Engineers has to develop the nack of orthographic reading which is possible through understanding and visualising the shape and size of the object. Understanding and visualising the missing views helps to improve the imagination power.

It is preferable to analyse the given two views by considering the various sub components of objects such as cylinder, prism, cone, pyramid, holes, grooves, ribs, flat plates etc. Some fundamental approach will help to analyse and imagine the object conveniently are as follows.

1. A corner or an edge may be represented by a point. Generally corner is formed by three edges.
2. A line may represent an edge or a flat surface.
3. An area bounded by object line may represent flat or curve surface.
4. When two surfaces intersect they form an edge which is represented as a line.

Though there is no sequence or specific method to learn the missing view, it is possible to master through practice and good imagination. It is preferable to add the sectional view in orthographic reading for clear exposure of hidden details of an object.

Note : *Students are advised to revise and follow all the basic principle of chapter Orthographic Projections.*

Scanned by CamScanner

13.2 Elementary Solved Problems

Problem 1

Figure 13.1 (a) shows front view and left hand side view. Draw top view.

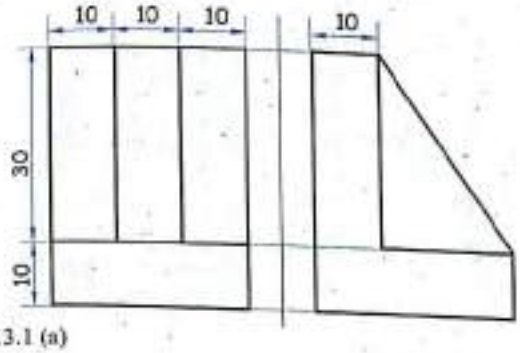

FIG. 13.1 (a)

Solution

Figure 13.1 (b) shows the top view.
Figure 13.1 (c) shows the object.

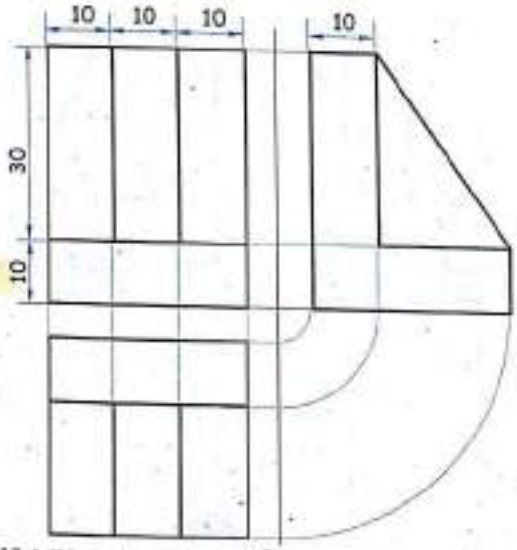

FIG. 13.1 (b)

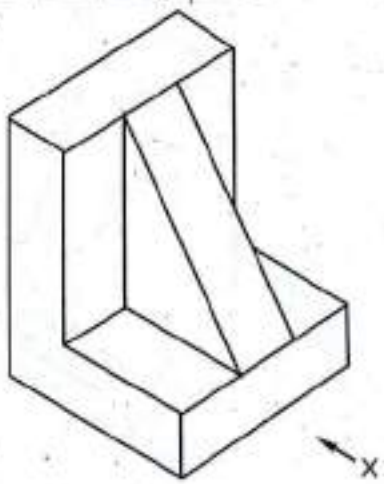

FIG. 13.1 (c)

Problem 2

Figure 13.2 (a) shows front view and left hand side view. Draw top view.

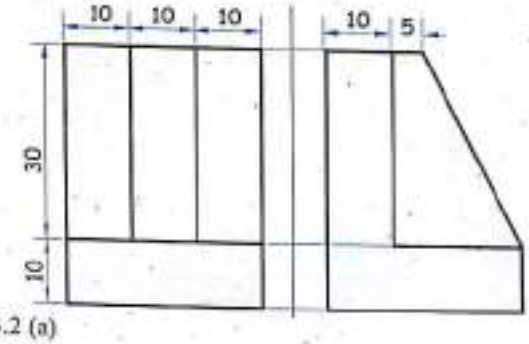

FIG. 13.2 (a)

Solution

Figure 13.2 (b) shows the top view.
Figure 13.2 (c) shows the object.

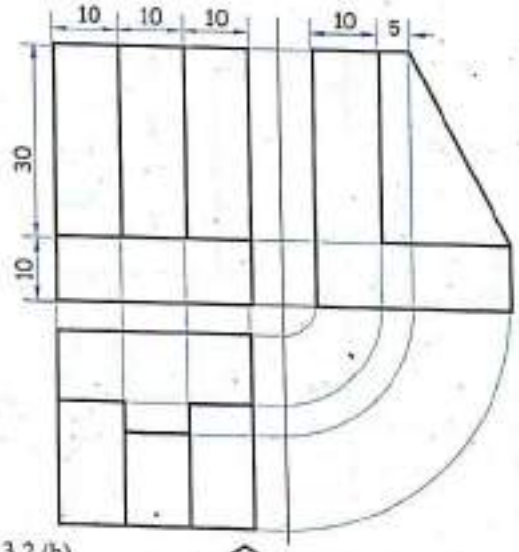

FIG. 13.2 (b)

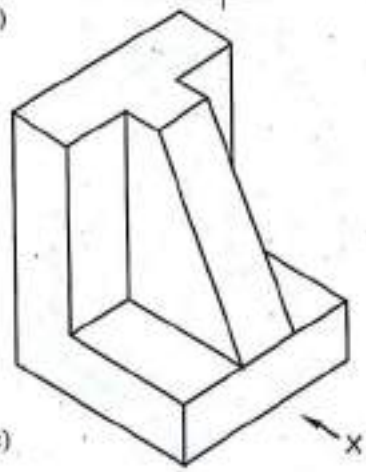

FIG. 13.2 (c)

Scanned by CamScanner

Problem 3

Figure 13.3 (a) shows front view and left hand side view. Draw the missing view.

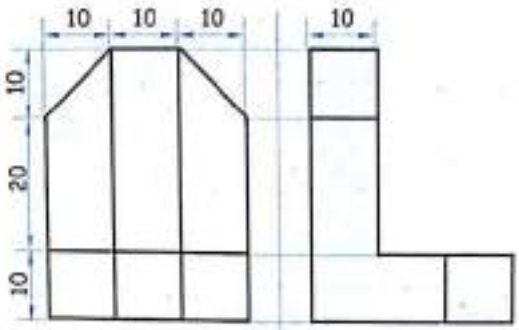

FIG. 13.3 (a)

Solution

Figure 13.3 (b) shows the missing view.
Figure 13.3 (c) shows the object.

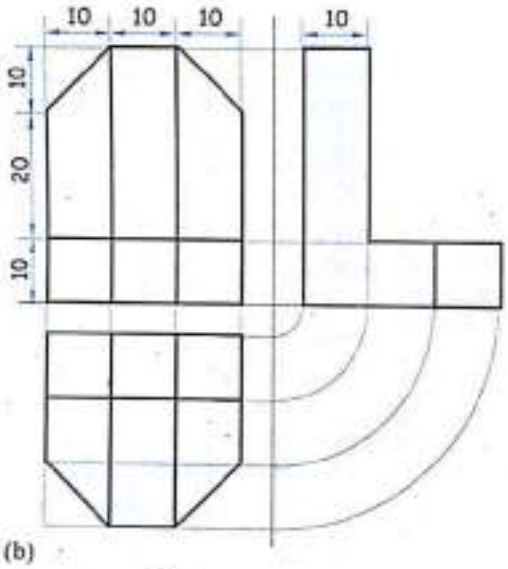

FIG. 13.3 (b)

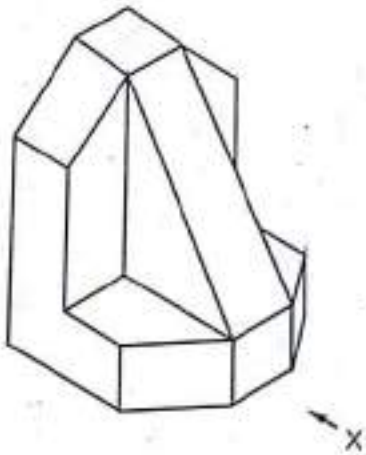

FIG. 13.3 (c)

Problem 4

Figure 13.4 (a) shows front view and left hand side view. Draw top view.

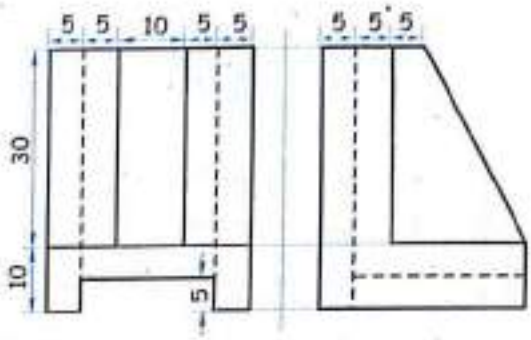

FIG. 13.4 (a)

Solution

Figure 13.4 (b) shows the top view.
Figure 13.4 (c) shows the object.

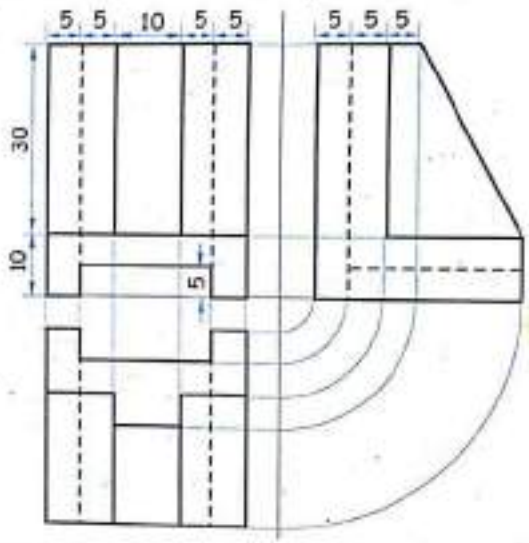

FIG. 13.4 (b)

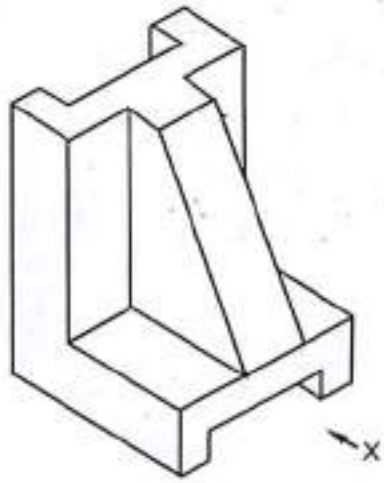

FIG. 13.4 (c)

Scanned by CamScanner

13.3 Basic Exercise to Develop the Imagination for Missing View

A simple object is formed by cutting the solid cube of sides 30 mm within. F.V. and S.V. are given. Add missing view i.e. T.V. by first angle method of projection.

Note : F.V. and S.V. are purposely not specified, take your own assumption as per the convenience. For varification of solution of the problems, isometric view is drawn, one problem may have two or more solutions.

Problem 5

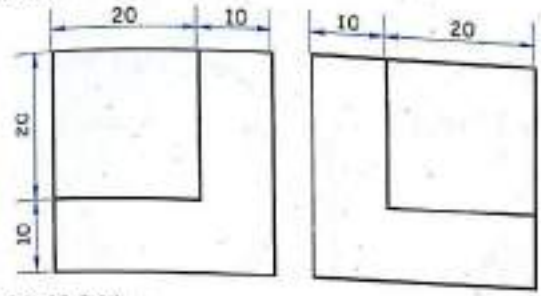

FIG. 13.5 (a)

Solution

Refer figure 13.5 (b).

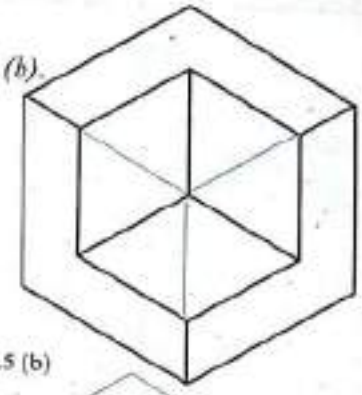

FIG. 13.5 (b)

Problem 6

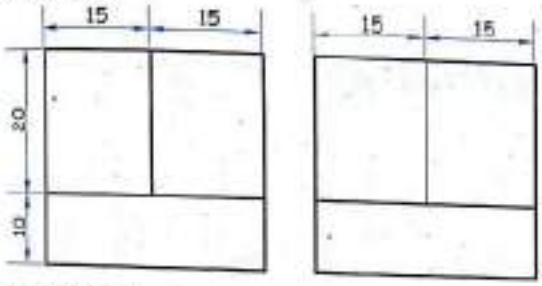

FIG. 13.6 (a)

Solution

Refer figure 13.6 (b).

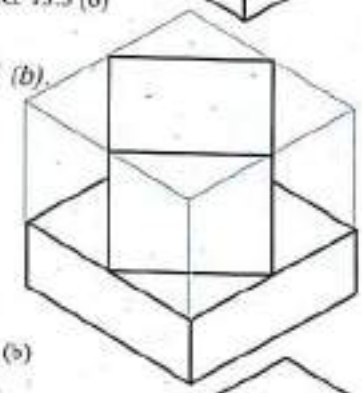

FIG. 13.6 (b)

Problem 7

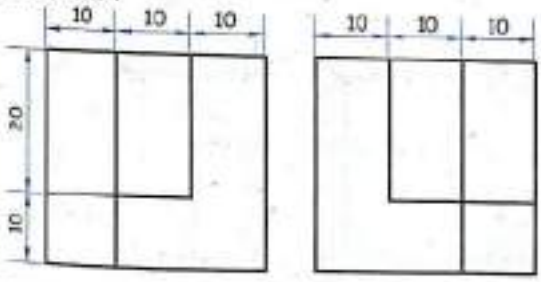

FIG. 13.7 (a)

Solution

Refer figure 13.7 (b).

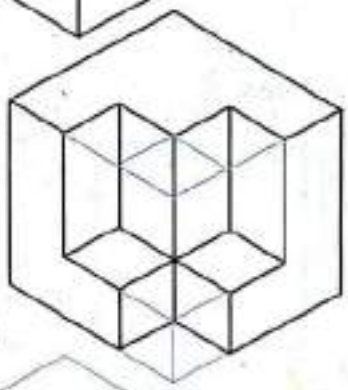

FIG. 13.7 (b)

Problem 8

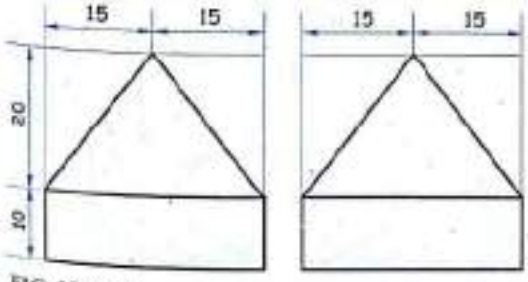

FIG. 13.8 (a)

Solution

Refer figure 13.8 (b).

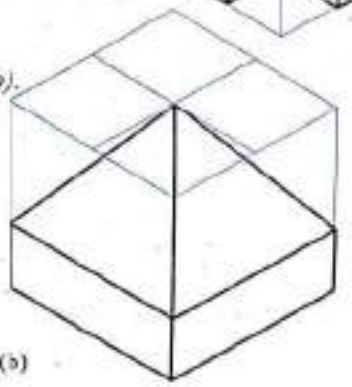

FIG. 13.8 (b)

Scanned by CamScanner

Problem 9

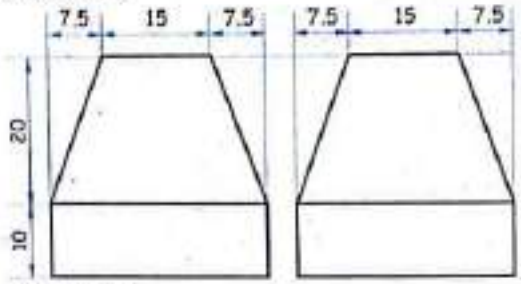

FIG. 13.9 (a)

Solution

Refer figure 13.9 (b).

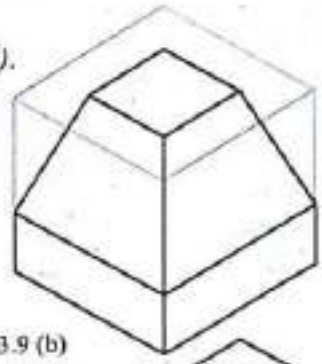

FIG. 13.9 (b)

Problem 10

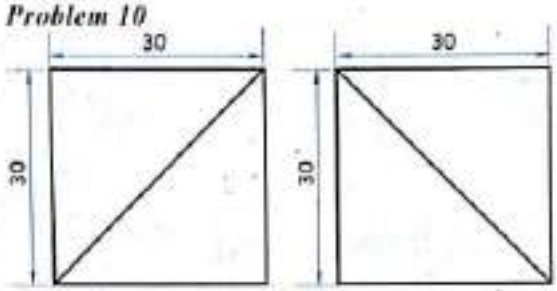

FIG. 13.10 (a)

Solution

Refer figure 13.10 (b).

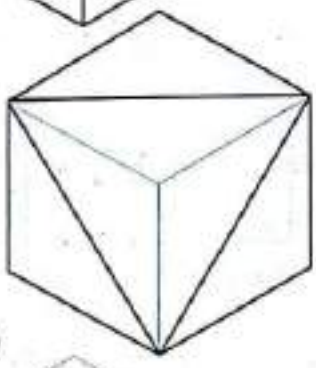

FIG. 13.10 (b)

Problem 11

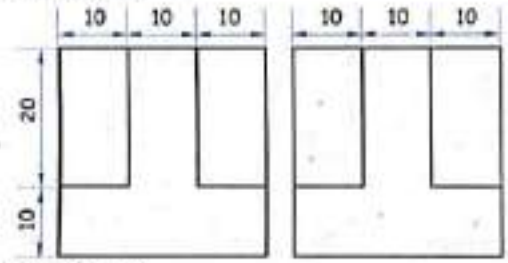

FIG. 13.11 (a)

Solution

Refer figure 13.11 (b).

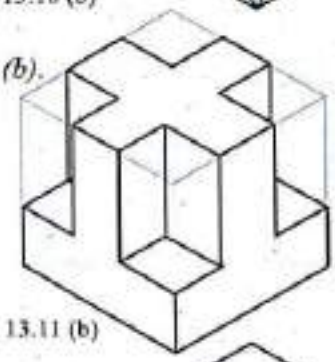

FIG. 13.11 (b)

Problem 12

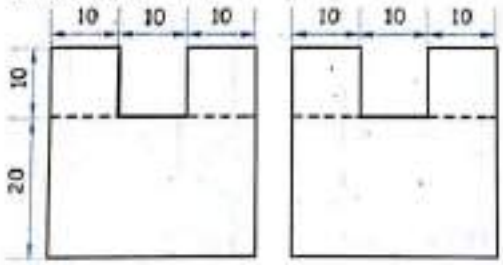

FIG. 13.12 (a)

Solution

Refer figure 13.12 (b).

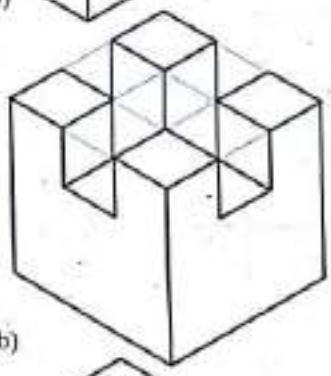

FIG. 13.12 (b)

Problem 13

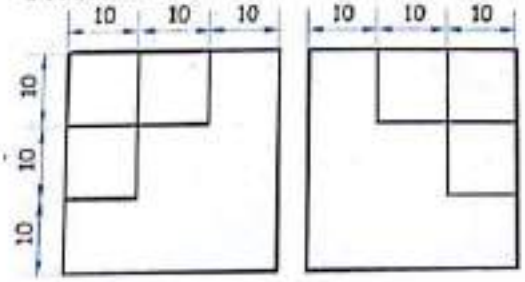

FIG. 13.13 (a)

Solution

Refer figure 13.13 (b).

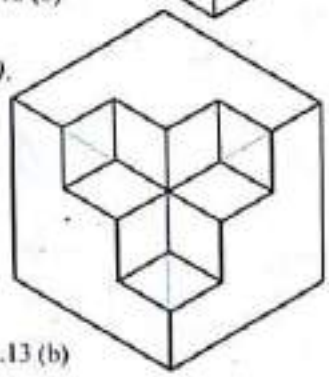

FIG. 13.13 (b)

Scanned by CamScanner

Problem 14

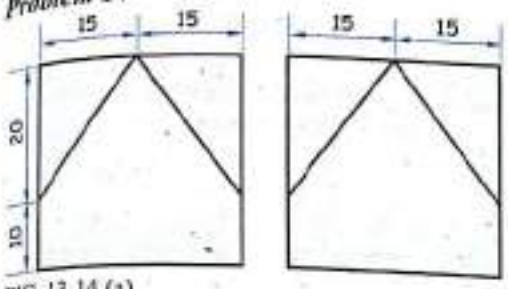

FIG. 13.14 (a)

Solution

Refer figure 13.14 (b).

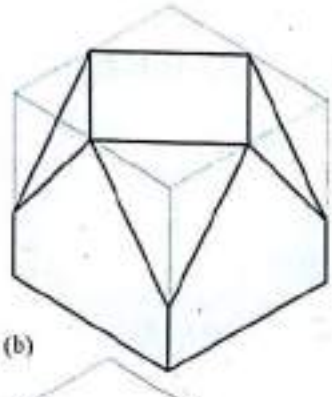

FIG. 13.14 (b)

Problem 15

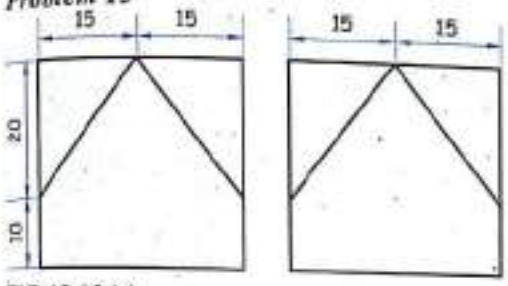

FIG. 13.15 (a)

Solution

Refer figure 13.15 (b).

FIG. 13.15 (b)

Problem 16

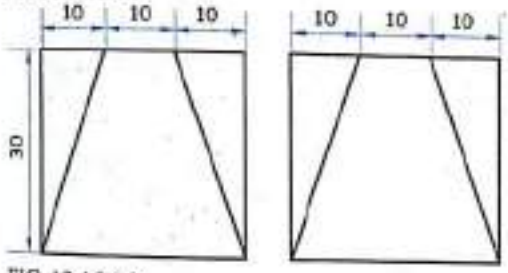

FIG. 13.16 (a)

Solution

Refer figure 13.16 (b).

FIG. 13.16 (b)

Problem 17

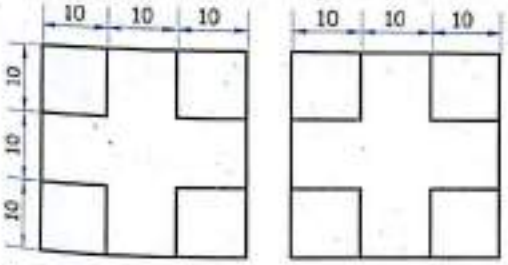

FIG. 13.17 (a)

Solution

Refer figure 13.17 (b).

FIG. 13.17 (b)

Problem 18

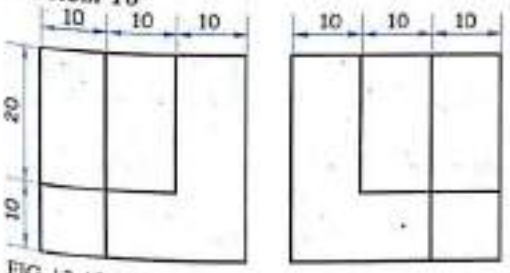

FIG. 13.18 (a)

Solution

Refer figure 13.18 (b).

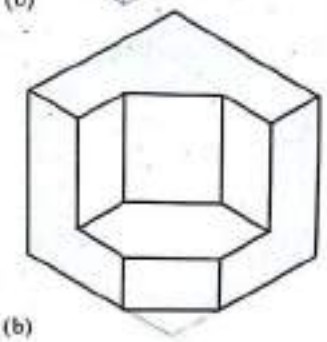

FIG. 13.18 (b)

Scanned by CamScanner

13.4 Possibility of More than One Solution for Given Two Views

Problem at elementary level can have more than one solutions. In some of the cases two views are insufficient to define the exact object.

Problem 19

Figure 13.19 (a) shows the F.V. and R.H.S.V. of a simple object. Draw its T.V.

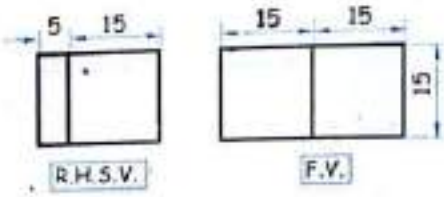

FIG. 13.19 (a)

Solution

Few isometric views are shown in *figure 13.19 (b)* which satisfies the F.V. and the R.H.S.V. of the given problem.

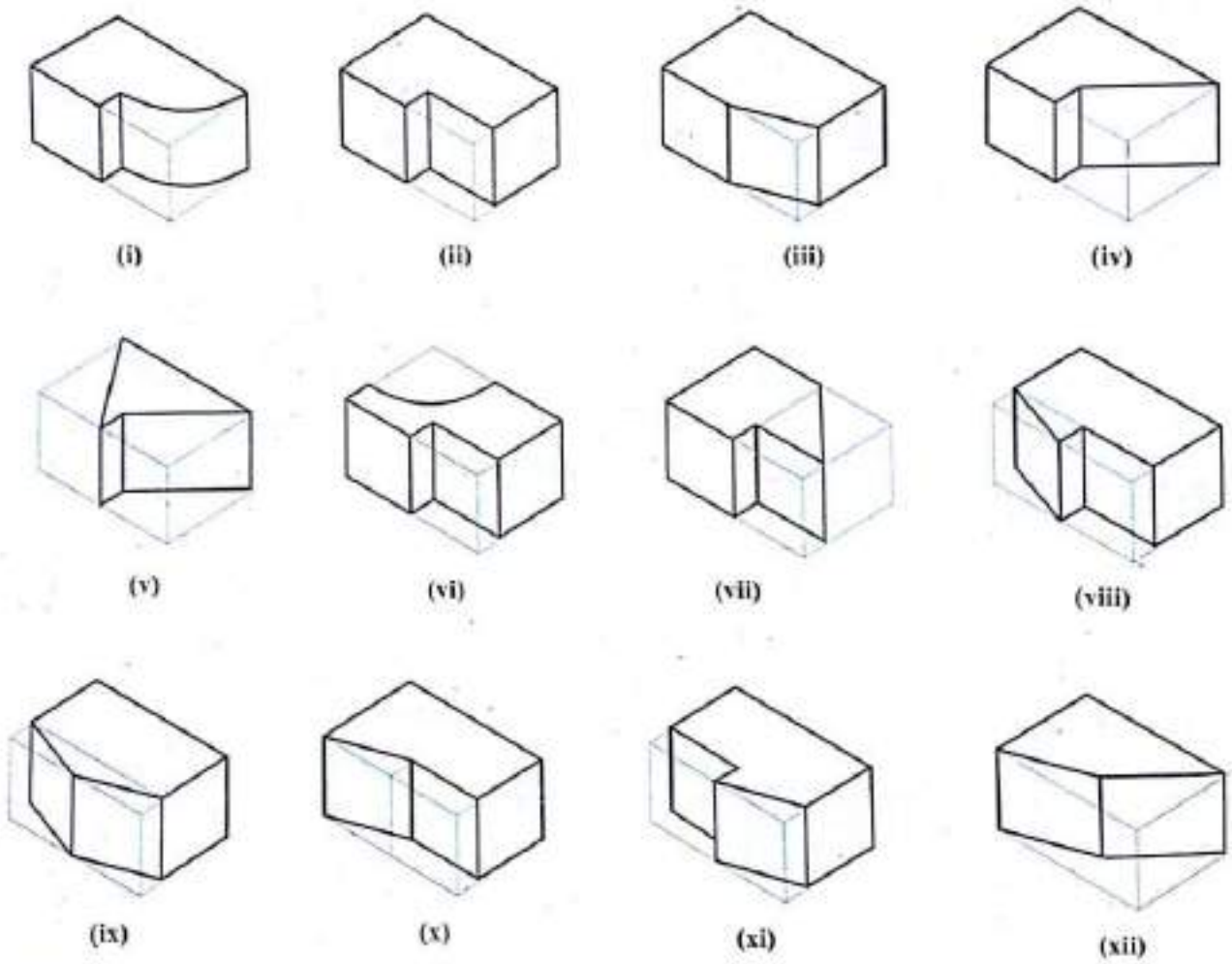

FIG. 13.19 (b)

Scanned by CamScanner

Problem 20

The elevation and plan of an object is shown in *figure 13.20 (a)*. Draw its end view.

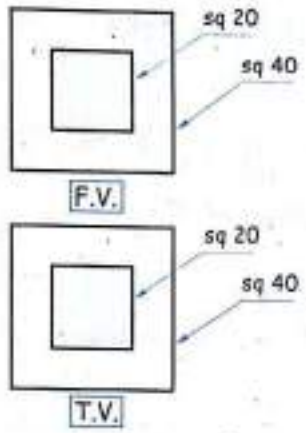

FIG. 13.20 (a)

Solution

Few isometric views are shown in *figure 13.20 (b)* which satisfies the F.V. and T.V. of the given problem with different solutions for side view.

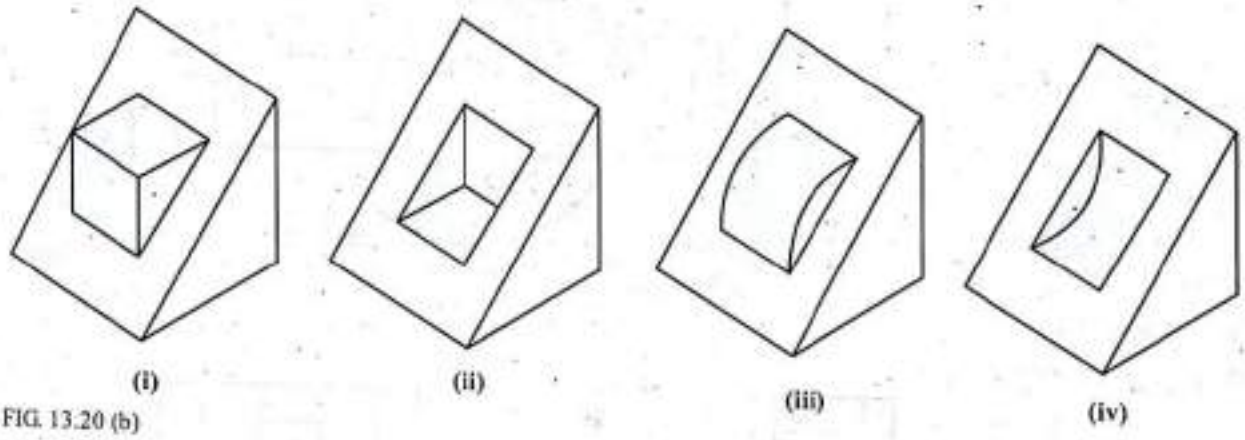

FIG. 13.20 (b)

Problem 21

Figure 13.21 (a). shows the F.V. and S.V. of simple object. Draw its T.V.

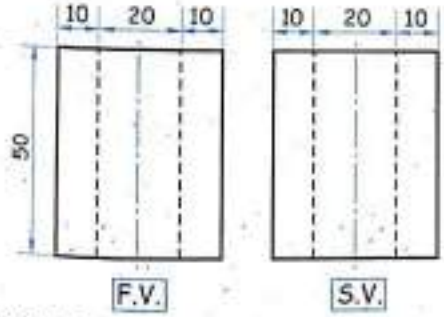

FIG. 13.21 (a)

Solution

Six different T.V. are shown in *figure 13.21 (b)* as a solution of problem.

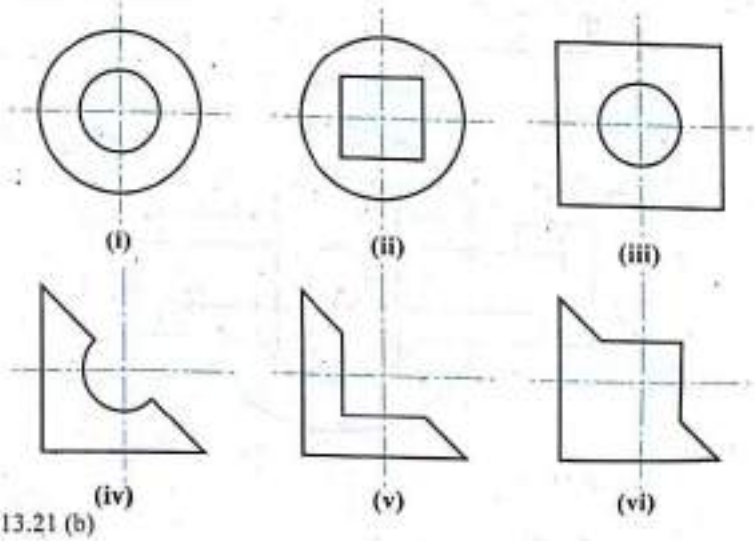

FIG. 13.21 (b)

Scanned by CamScanner

13.5 Solved Problems

Problem 22

Figure 13.22 (a) shows F.V. and T.V. of an object. Draw :

(i) Sectional F.V. along *S-S*.

(ii) T.V.

(iii) L.H.S.V.

Using same method of projections.

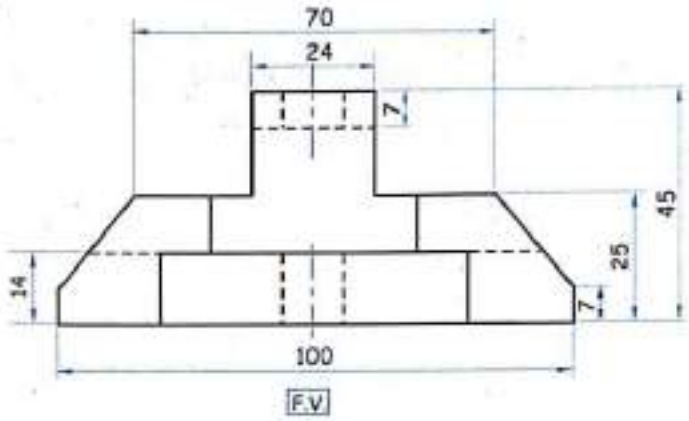

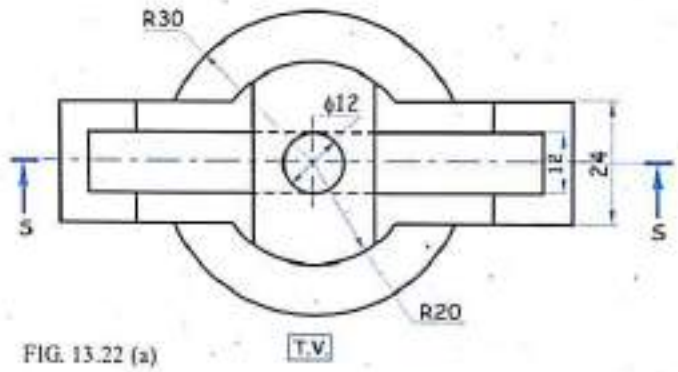

FIG. 13.22 (a)

Solution

Refer figure 13.22 (b).

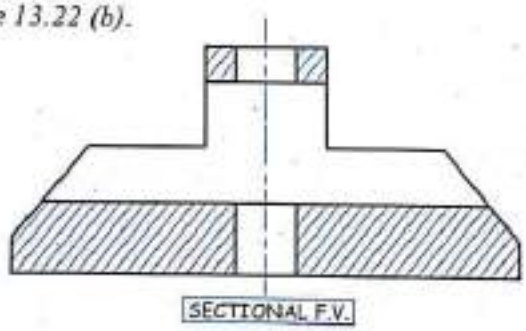

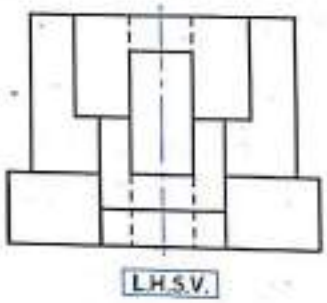

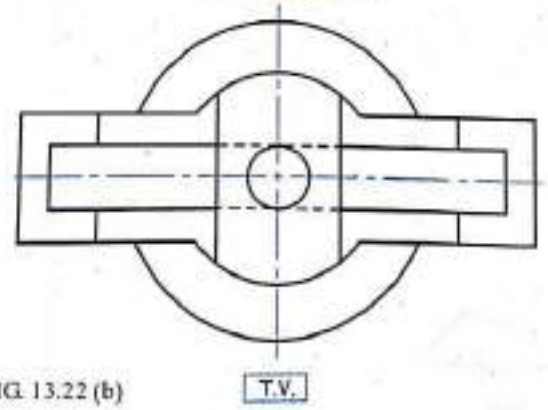

FIG. 13.22 (b)

Scanned by CamScanner

Problem 23

Figure 13.23 (a) shows F.V. and S.V. of an object. Using first angle method of projection. Draw :

(i) Sectional F.V. (section along *A-A*)

(ii) Side view

(iii) T.V.

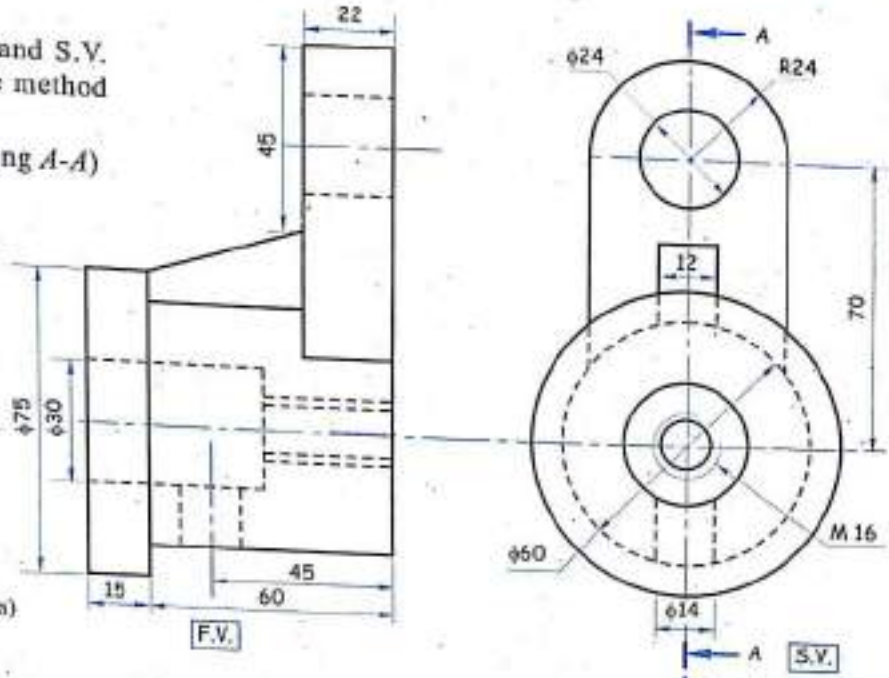

FIG. 13.23 (a)

Solution

Refer figure 13.23 (b).

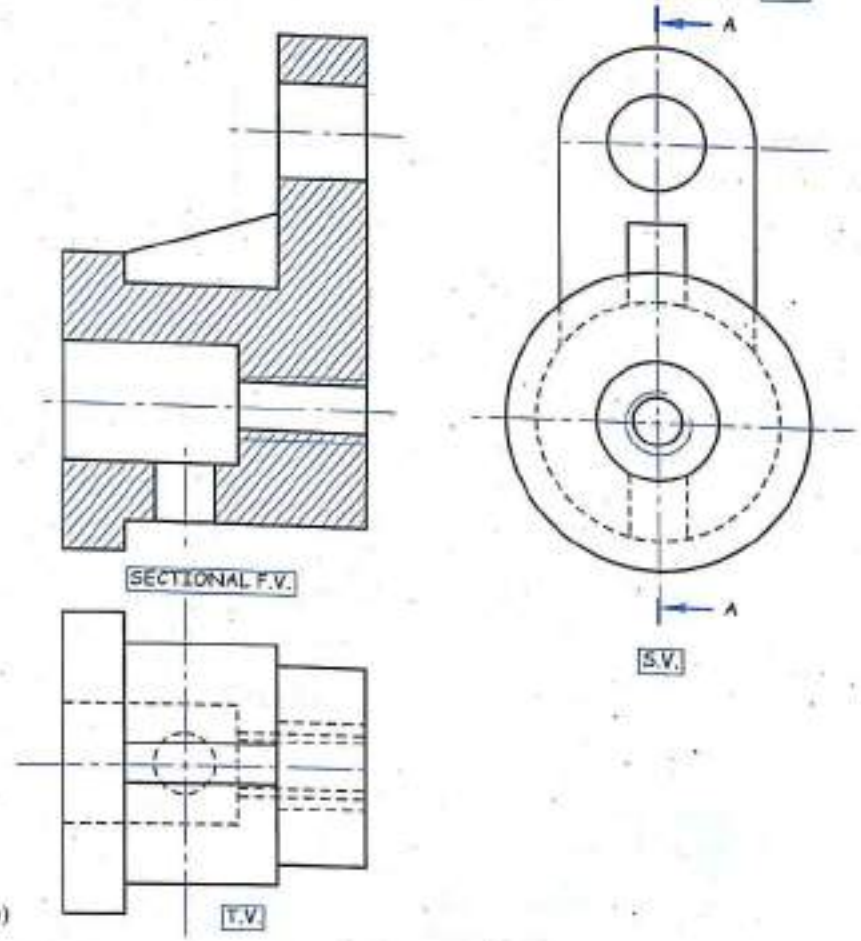

FIG. 13.23 (b)

Scanned by CamScanner

Problem 24

Figure 13.24 (a) shows elevation and view of an object. Using the same method of projection. Draw :

(i) Sectional elevation, section along *A-A*.

(ii) End view.

(iii) Plan.

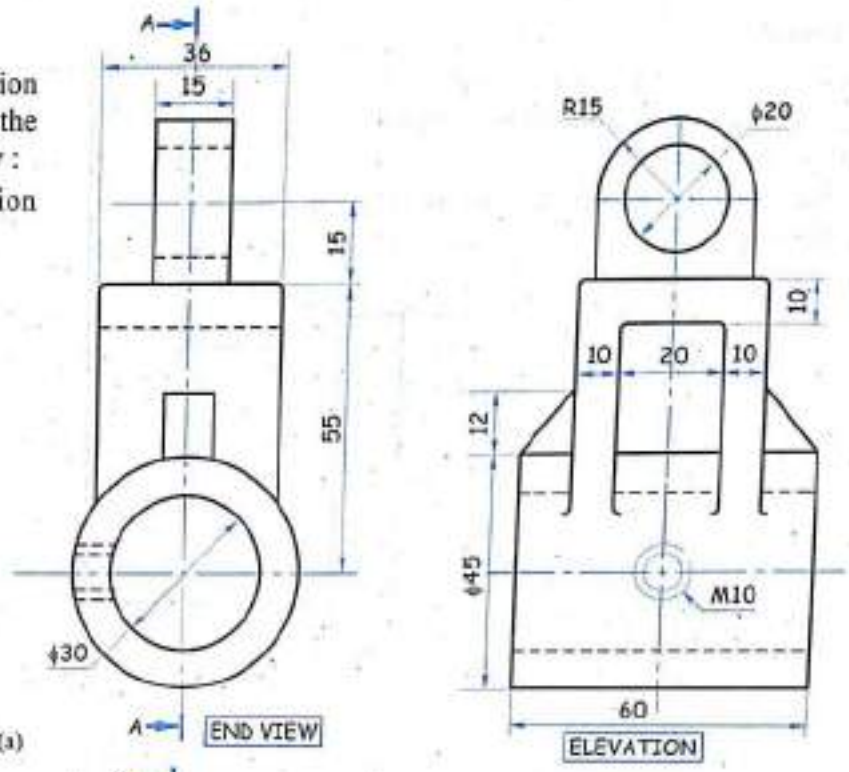

FIG. 13.24 (a)

Solution

Refer figure 13.24 (b).

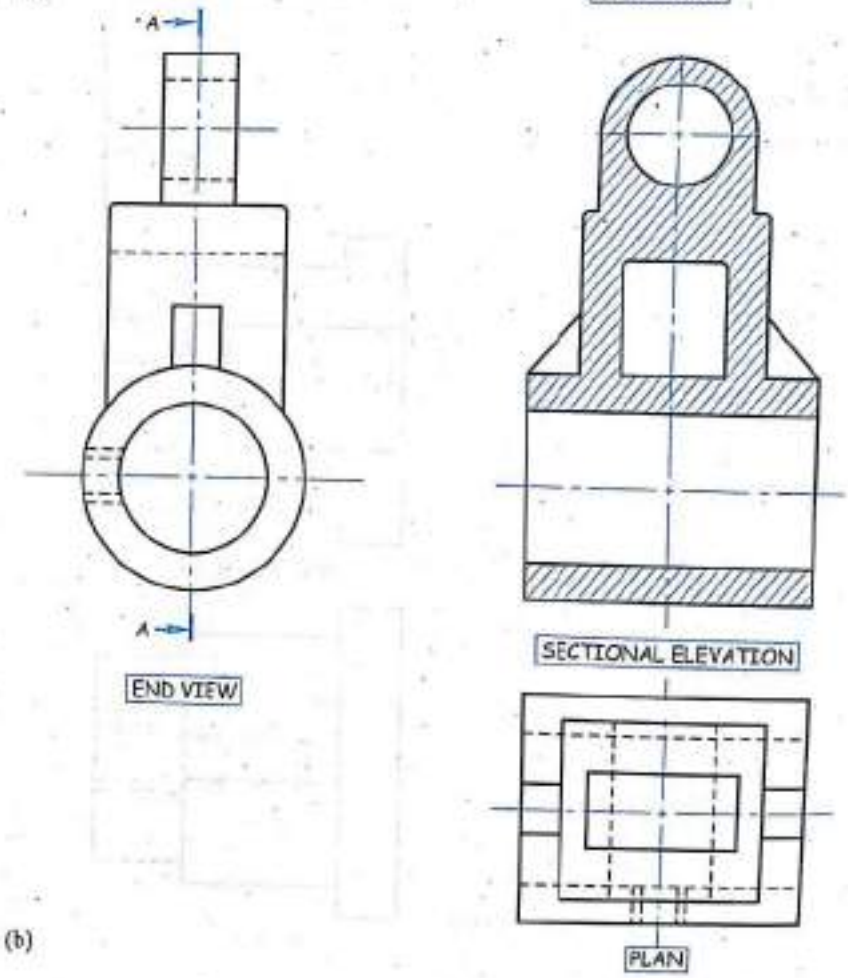

FIG. 13.24 (b)

Scanned by CamScanner

Problem 25

Two views of an object are shown in *figure 13.25 (a)*. Using first angle projection method draw the following views.

(i) Sectional elevation , section along *A-A*.

(ii) Sectional plan, section along *B-B*.

(iii) Right hand side view.

(Nov. '94, May '11, M.U.)

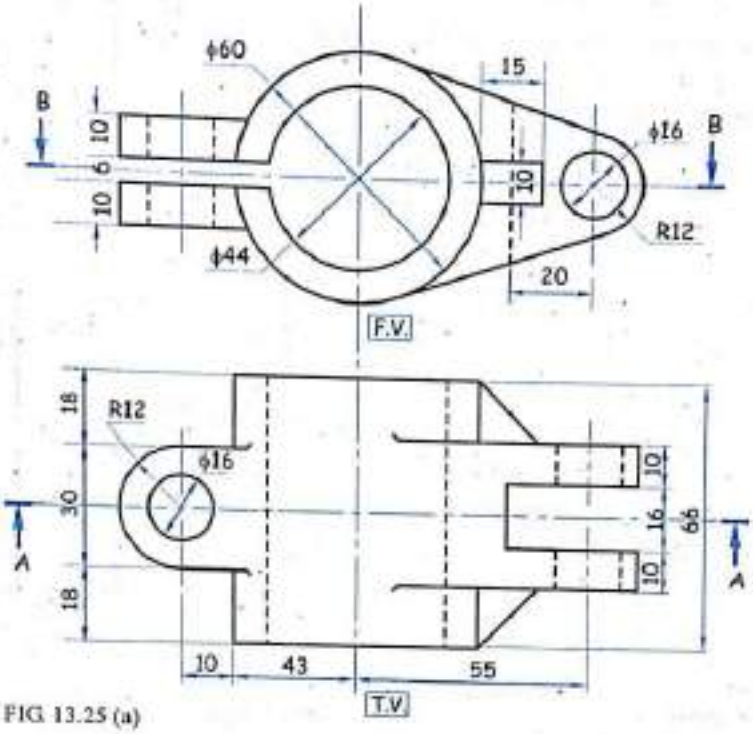

FIG. 13.25 (a)

Solution

Refer figure 13.25(b).

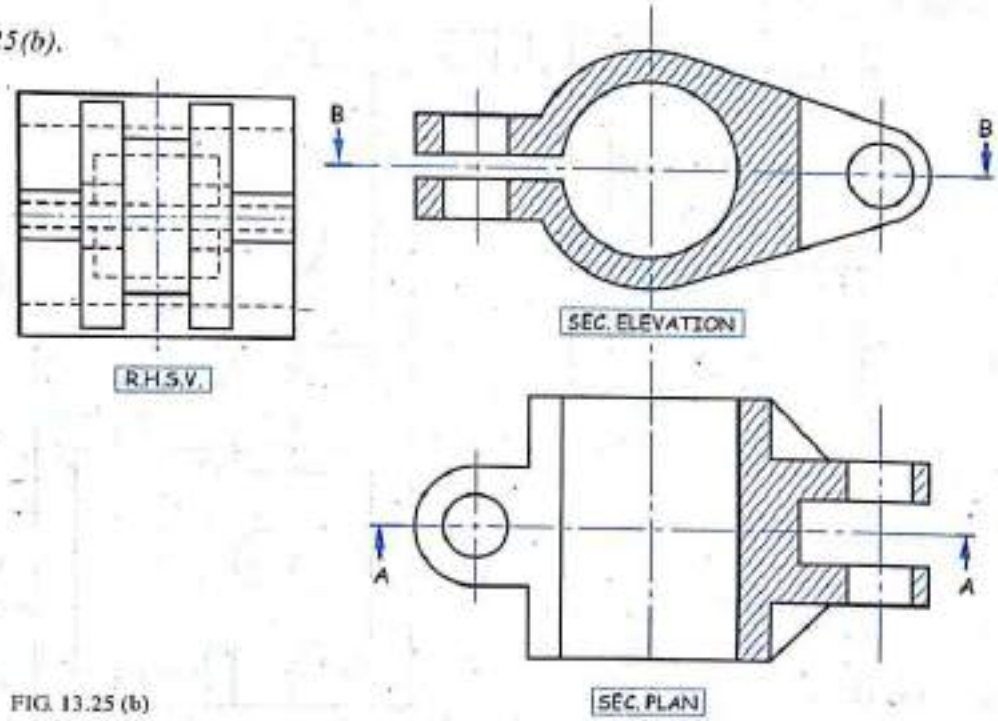

FIG. 13.25 (b)

Scanned by CamScanner

Problem 26

Draw the following views of the object shown in *figure 13.26 (a)*.

(i) Sectional front elevation across the section plane *A-A*.

(ii) Sectional plan across the section plane *B-B*.

(iii) Right hand side view.

(Nov. '95, M.U.)

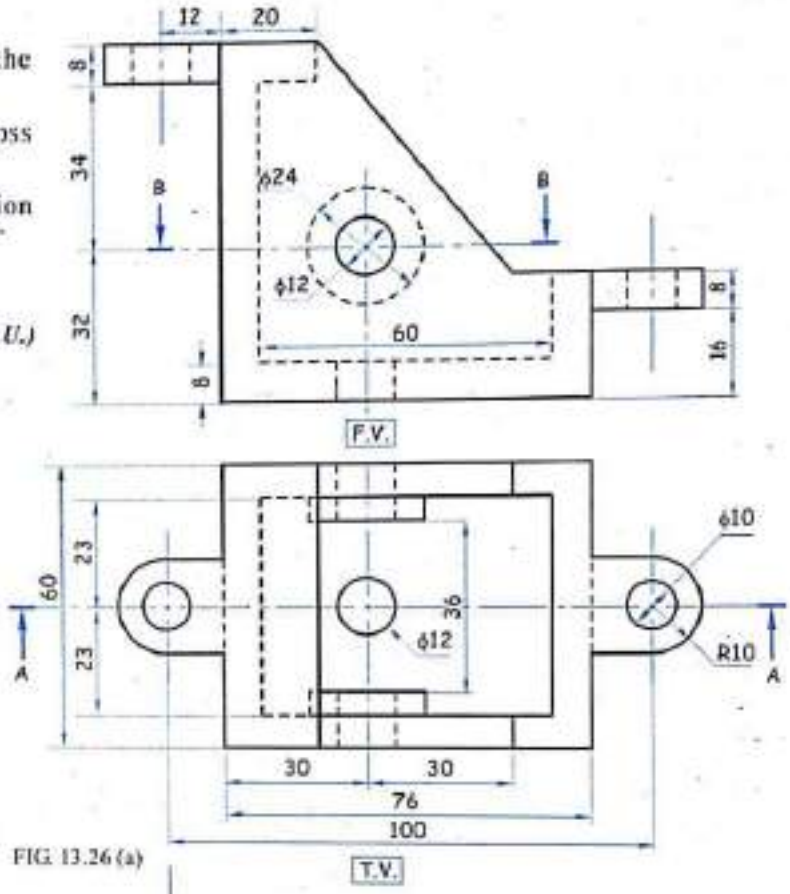

FIG. 13.26 (a)

Solution

Refer figure 13.26 (b).

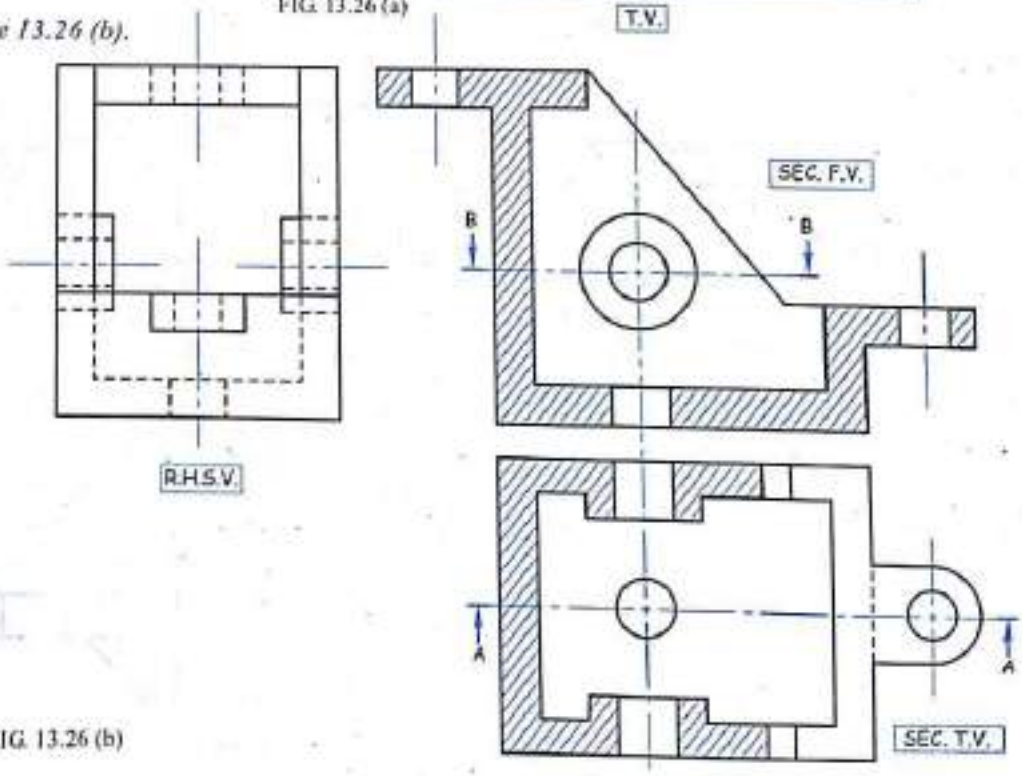

FIG. 13.26 (b)

Scanned by CamScanner

Problem 27

Figure 13.27 (a) shows the F.V. and L.H.S.V. of a machine part. Draw the following using 1:1 scale.

(i) Sectional elevation across section plane *A-A*.

(ii) Sectional L.H.S.V. across section plane *B-B*.

(iii) Missing T.V. showing all hidden details.

(May '96, Jan. '03, M.U.)

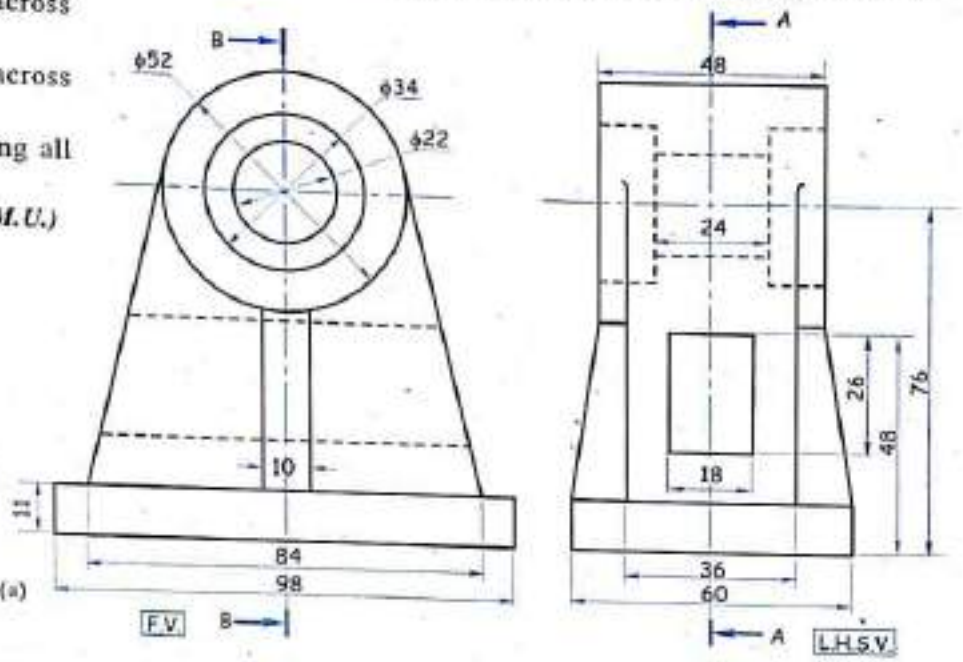

FIG. 13.27 (a)

Solution

Refer figure 13.27 (b).

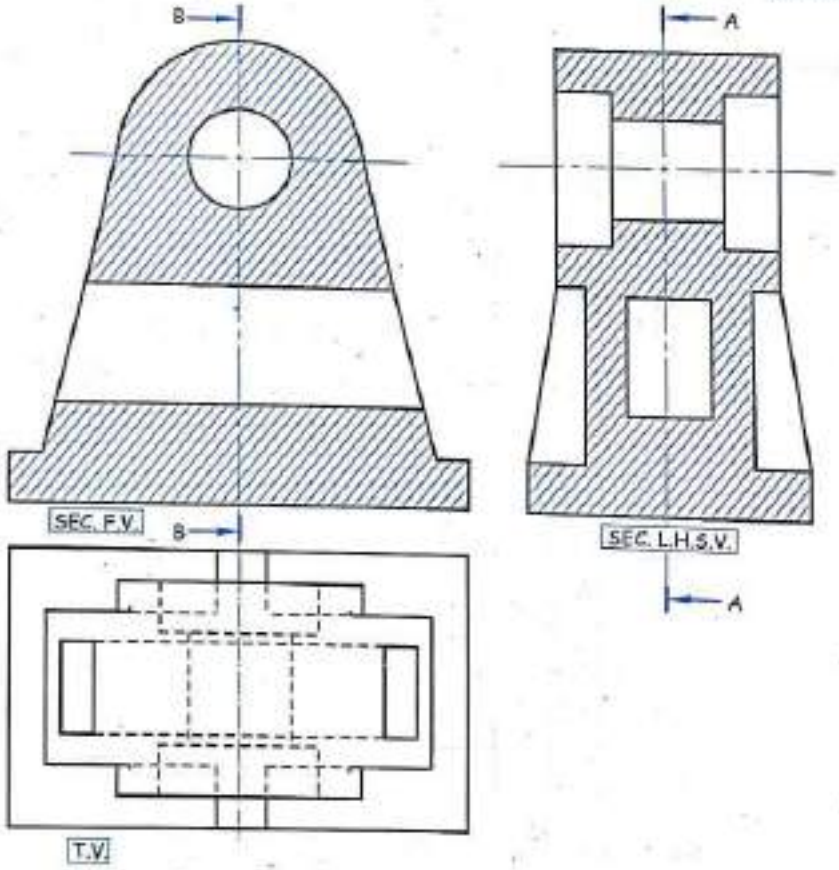

FIG. 13.27 (b)

Scanned by CamScanner

Problem 28

Figure 13.28 (a) shows the F.V. and T.V. of a machine part. Draw the following views using 1:1 scale

(i) Sectional elevation across section plane *A-A*.

(ii) Sectional L.H.S.V. across section plane *B-B*.

(iii) Missing T.V. showing all hidden details.

(iv) Insert at least 10 important dimensions.

(Nov. '96, Nov. '04, M.U.)

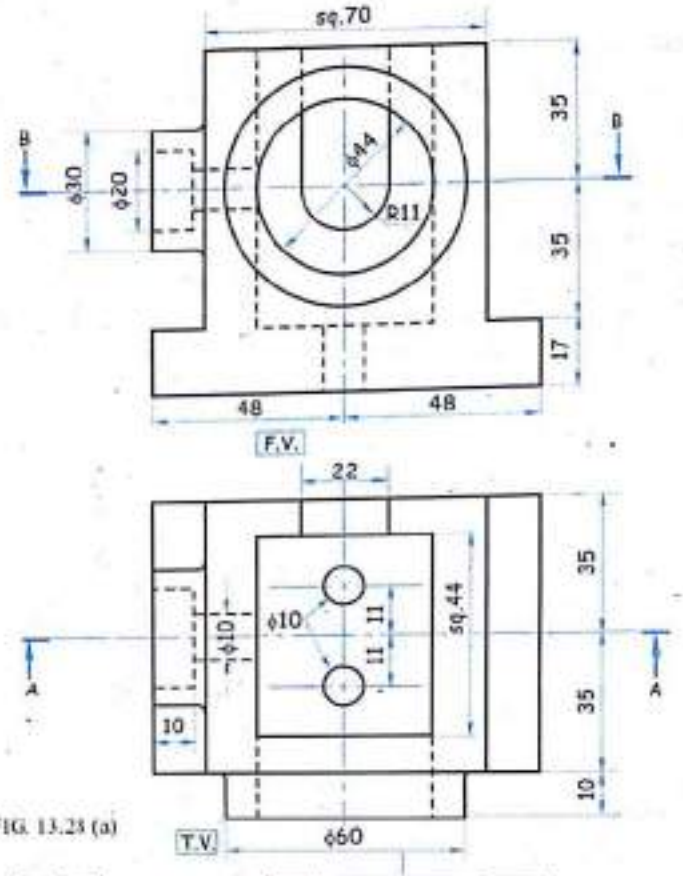

FIG. 13.28 (a)

Solution

Refer figure 13.28 (b).

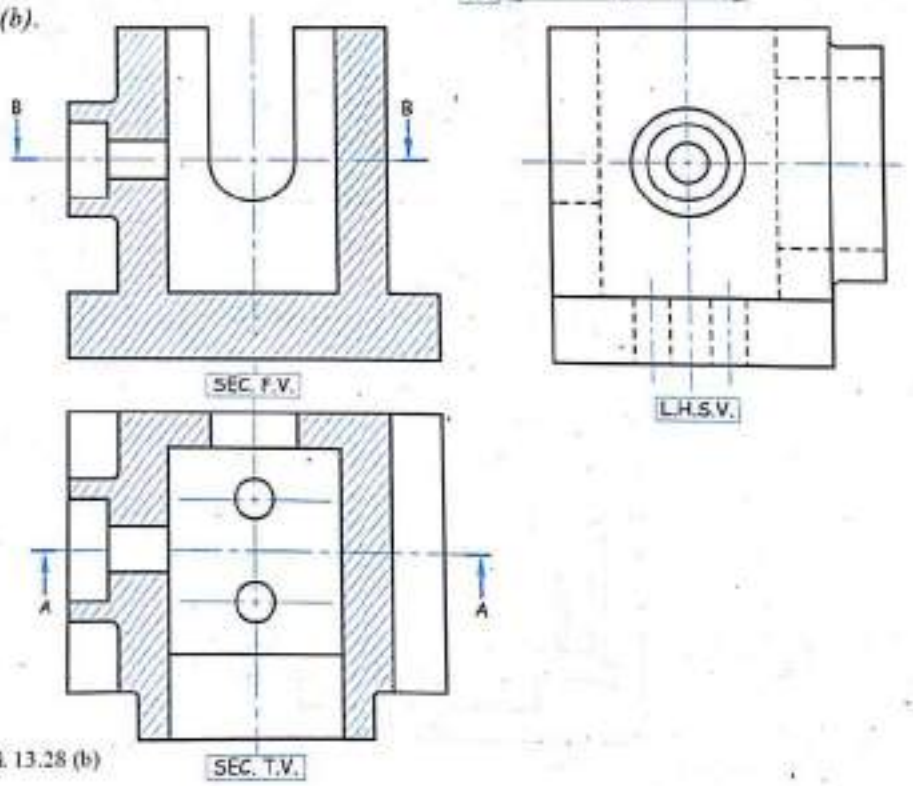

FIG. 13.28 (b)

Scanned by CamScanner

Problem 29

Figure 13.29 (a) shows the F.V. and L.H.S.V. of a machine part. Draw the following views using 1:1 scale.

(i) Sectional F.V. across section plane *A-A*.
(ii) Sectional L.H.S.V. across section plane *B-B*.
(iii) Missing T.V. showing all hidden details.
(iv) Insert at least 10 important dimensions.

(Nov.'97, M.U.)

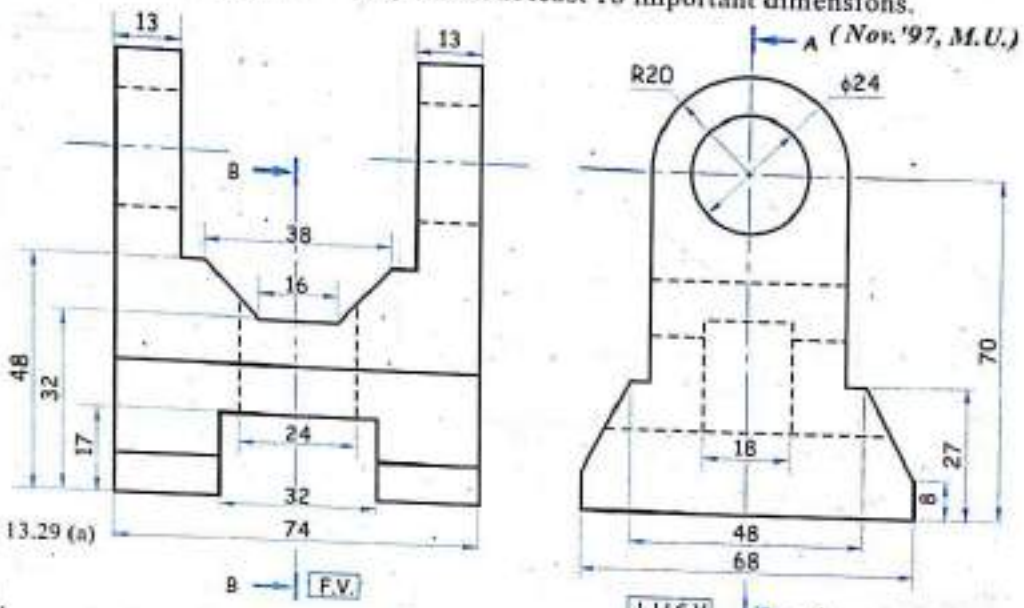

FIG. 13.29 (a)

Solution

Refer figure 13.29 (b).

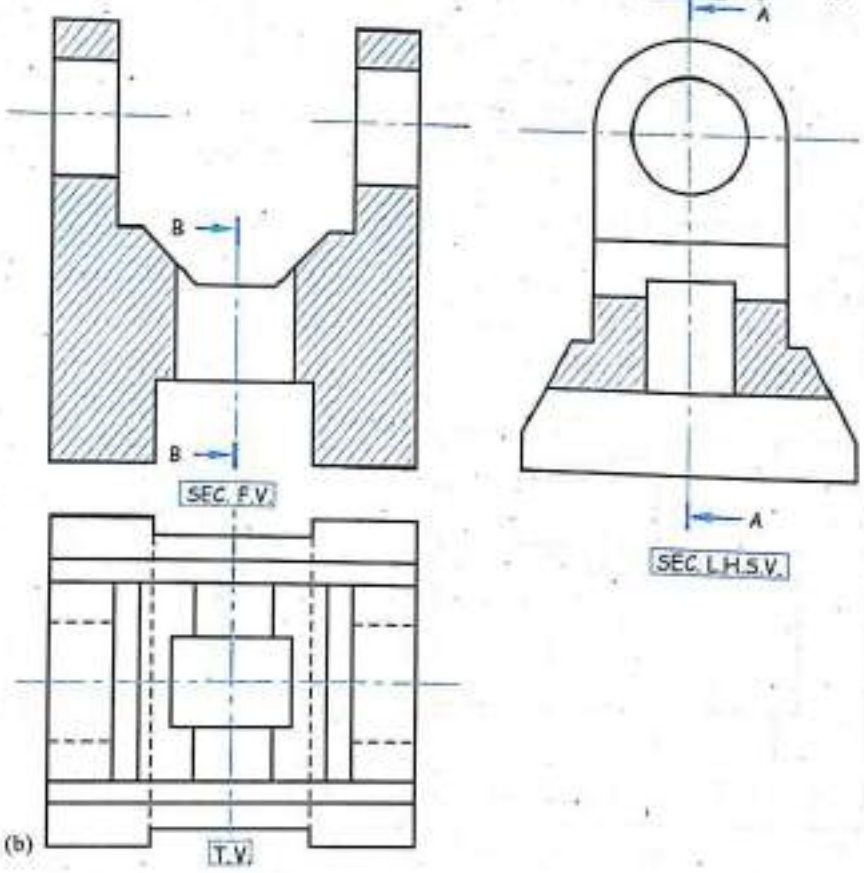

FIG. 13.29 (b)

Scanned by CamScanner

Problem 30

Figure 13.30 (a) shows front view and side view of a machine block. Draw the following views:

(i) Sectional front view along *A-A*. (ii) Sectional left hand side view along *B-B*.

(iii) Missing top view. (iv) Insert atleast 10 major dimensions.

(May '99, Dec. '11, M.U.)

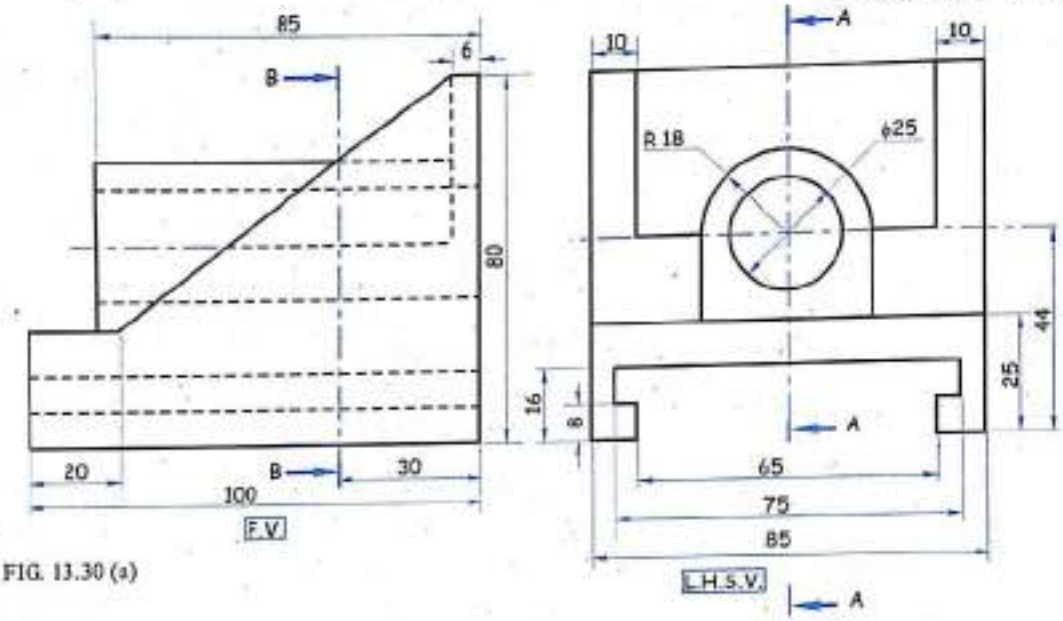

FIG. 13.30 (a)

Solution

Refer figure 13.30 (b).

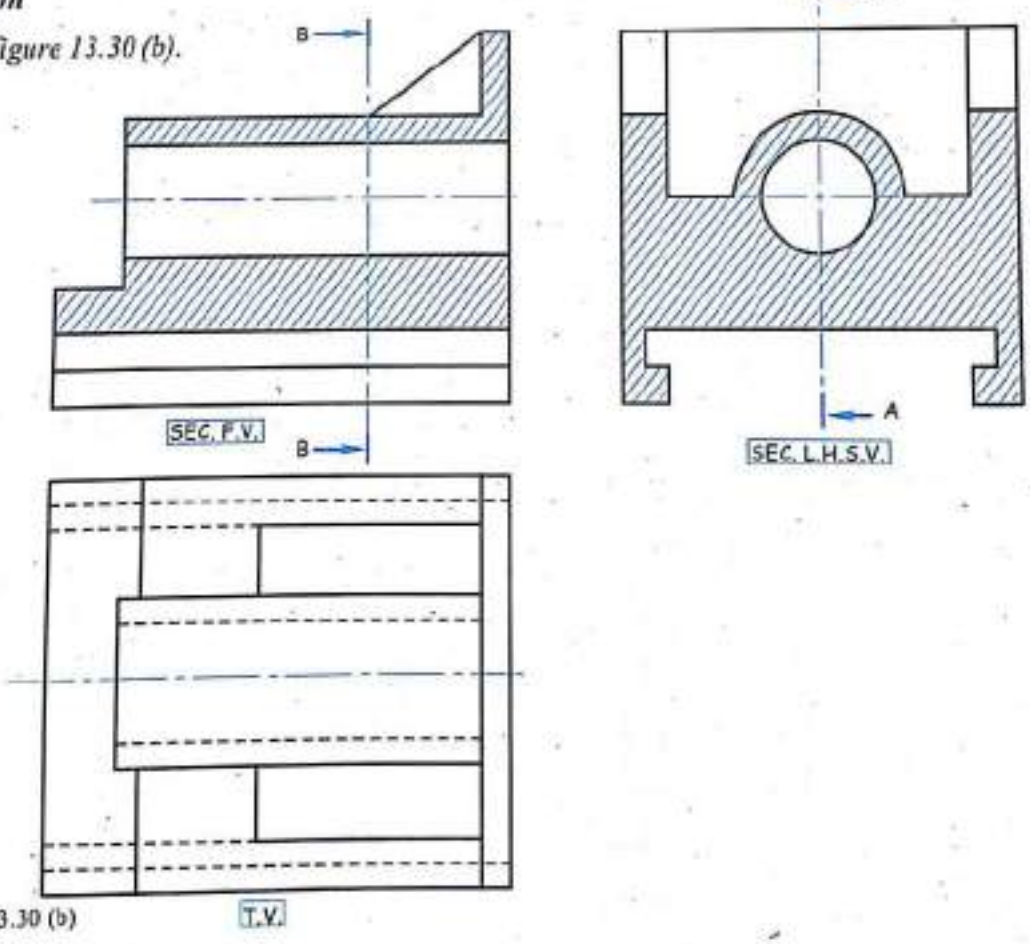

FIG. 13.30 (b)

Scanned by CamScanner

Problem 31

Figure 13.31 (a) shows the front view and top view of an object. Draw the following views

(i) Sectional front view along *A-A*.

(ii) Sectional top view along *B-B*.

(iii) Left side view.

(iv) Insert atleast ten major dimensions.

(Dec. '99, Nov. '05, M.U.)

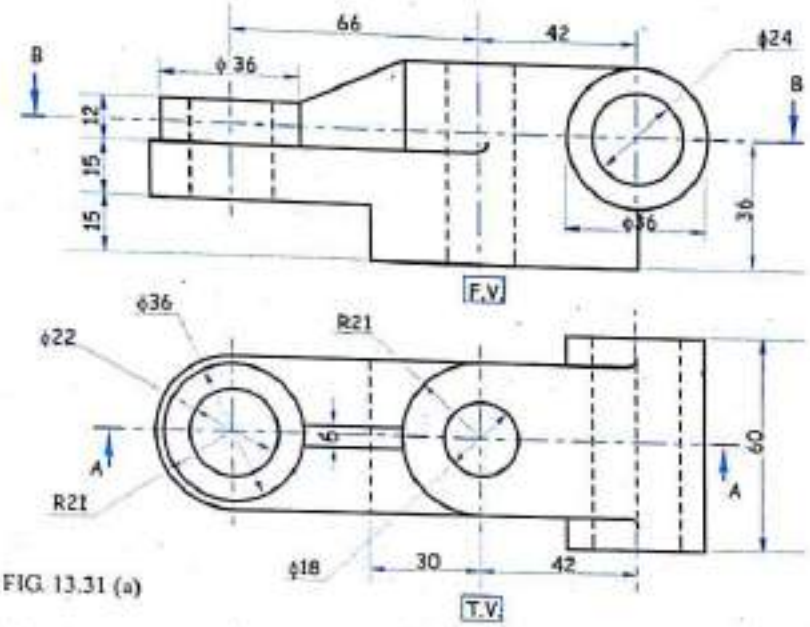

FIG. 13.31 (a)

Solution

Refer figure 13.31 (b).

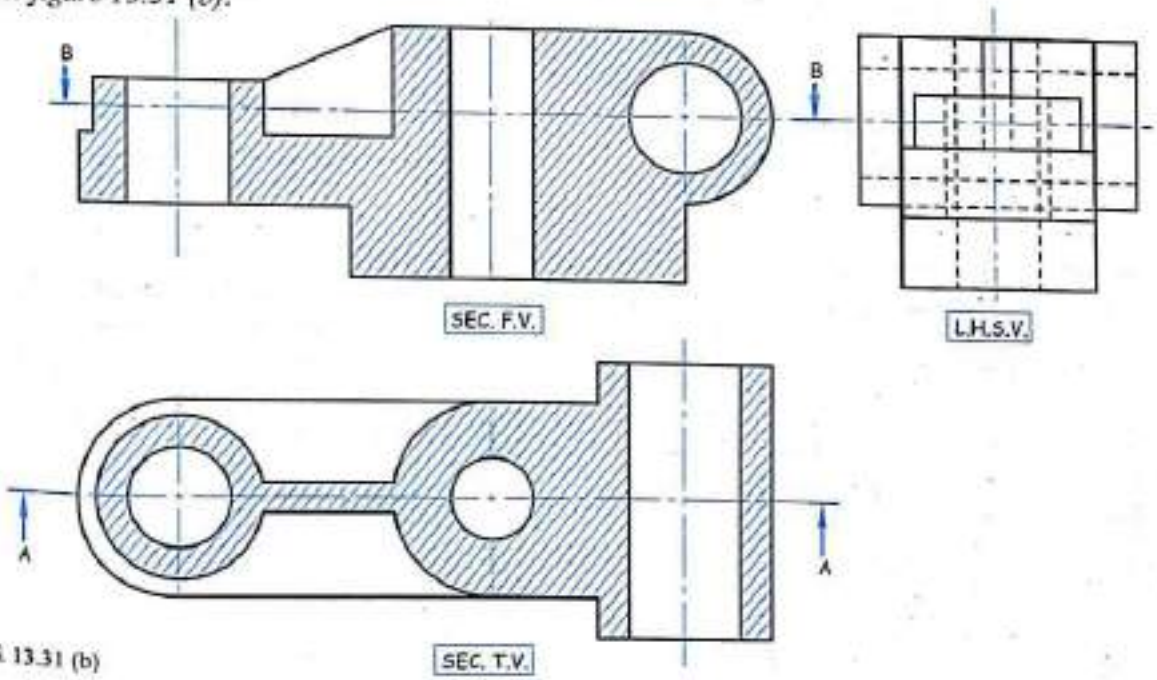

FIG. 13.31 (b)

Scanned by CamScanner

Problem 32

Two views of an object are shown in *figure 13.32 (a)*. Draw the following views.

(i) Sectional front view on the section plane *A-A*.

(ii) Sectional T.V. on the section plane *B-B*.

(iii) Left hand side view.

(iv) Insert atleast 8 major dimensions.

(May 2000, M.U.)

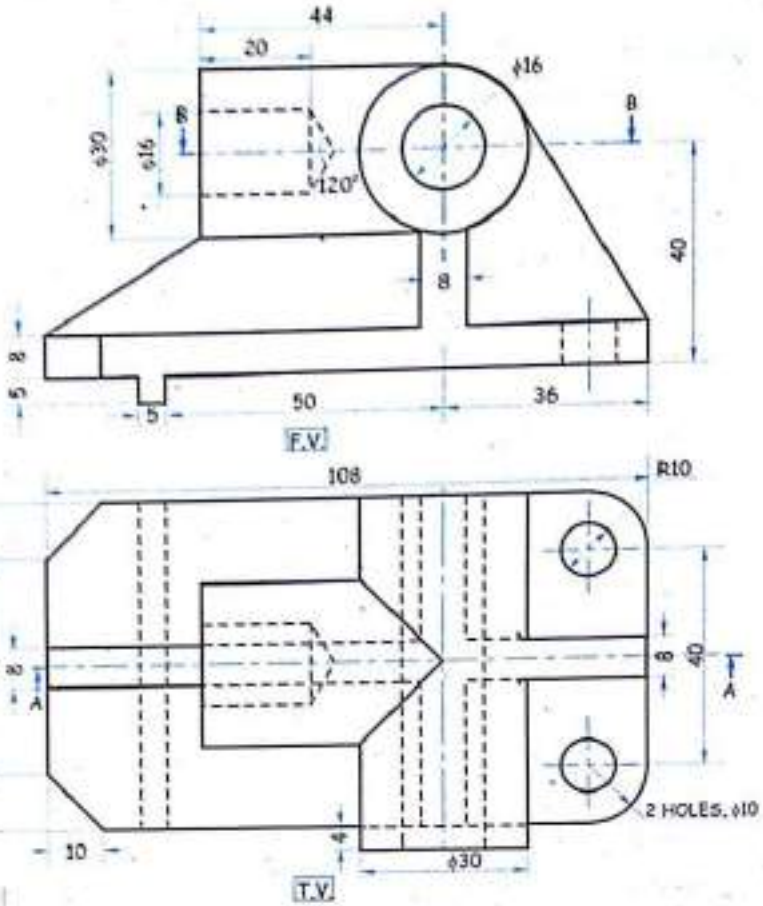

FIG. 13.32 (a)

Solution

Refer figure 13.32 (b).

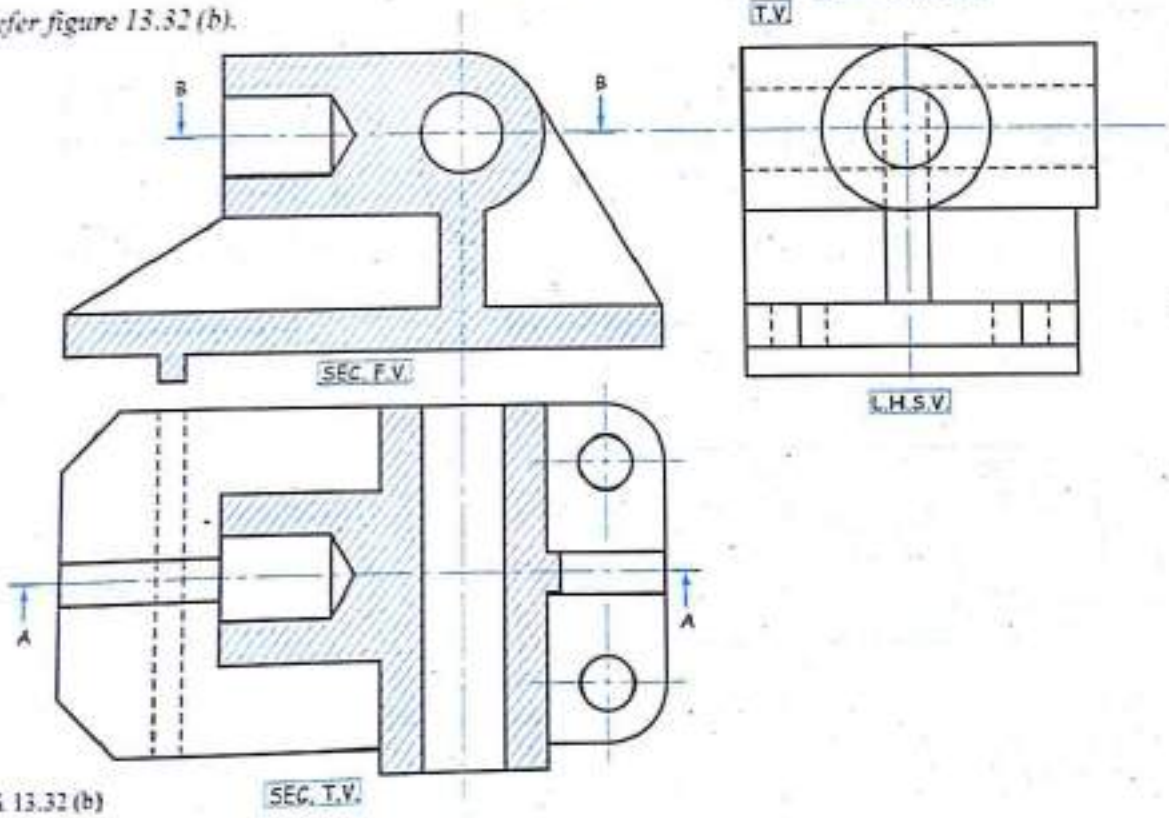

FIG. 13.32 (b)

Scanned by CamScanner

Problem 33

Figure 13.33 (a) below shows front view and right hand side view of a machine block. Draw the following views :

(i) The given front view.

(ii) Sectional side view across section plane *PQ*.

(iii) Sectional top view across sectional plane *RS*.

(iv) Insert atleast 10 major dimensions.

(June '05, M.U.)

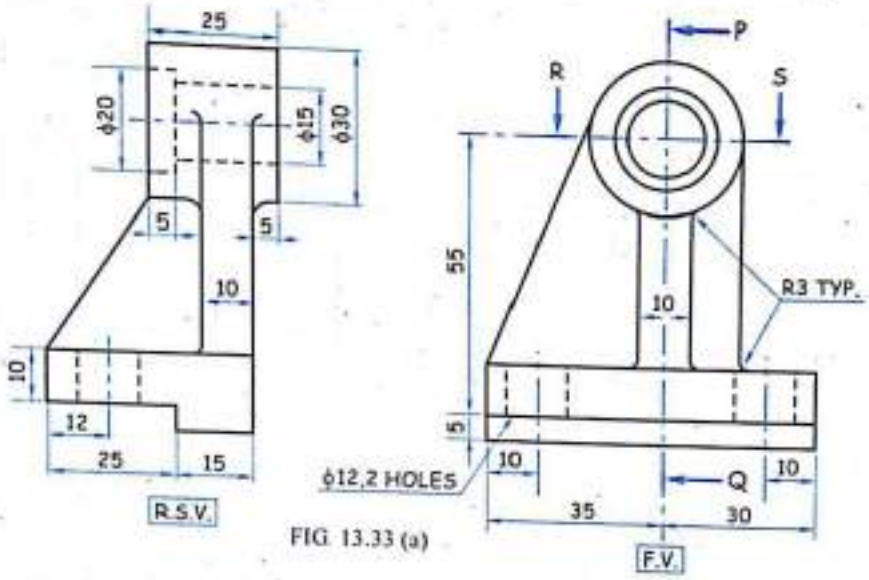

FIG. 13.33 (a)

Solution

Refer figure 13.33 (b).

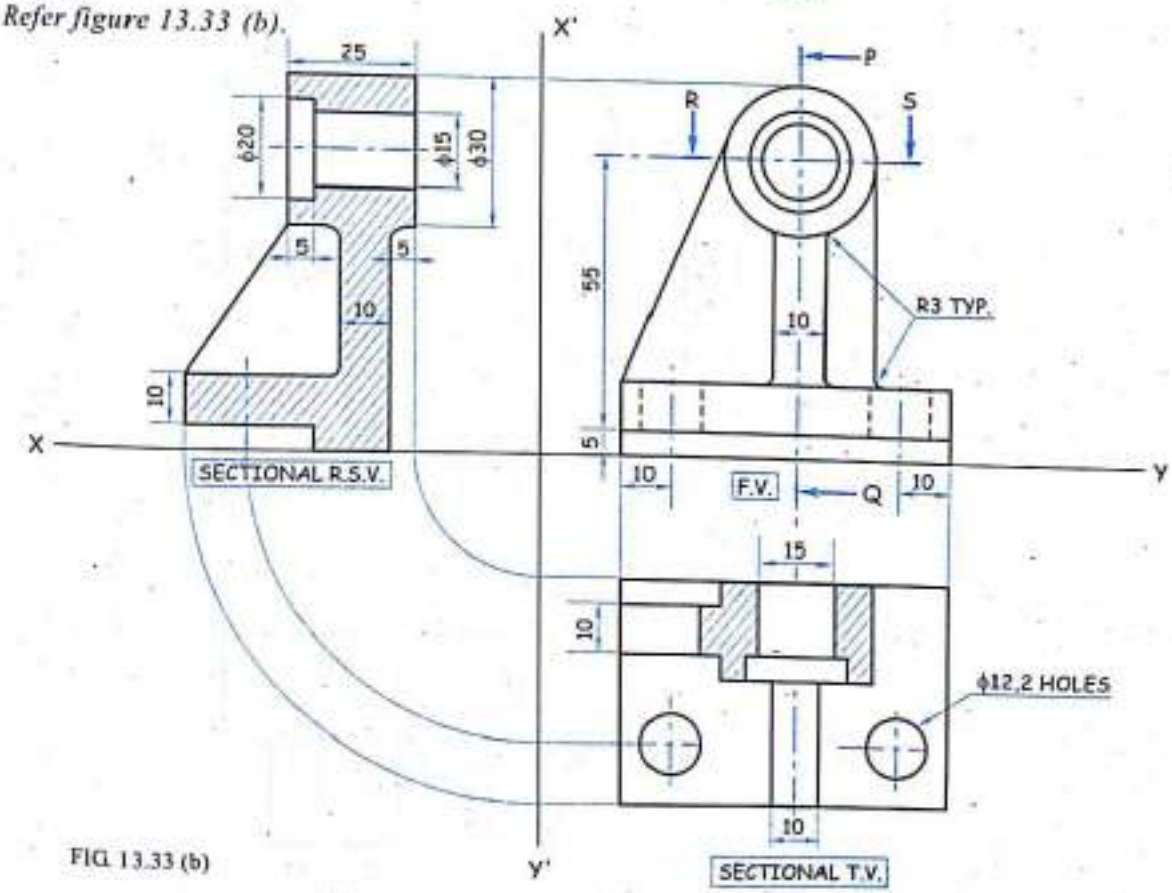

FIG. 13.33 (b)

Scanned by CamScanner

Problem 34

Figure 13.34 (a) shows Elevation and Right Hand side view. Draw by the same method using full scale.

(i) Elevation.

(ii) Sectional right hand side view.

(iii) Plan.

Show any ten dimensions.

(June '06, M.U.)

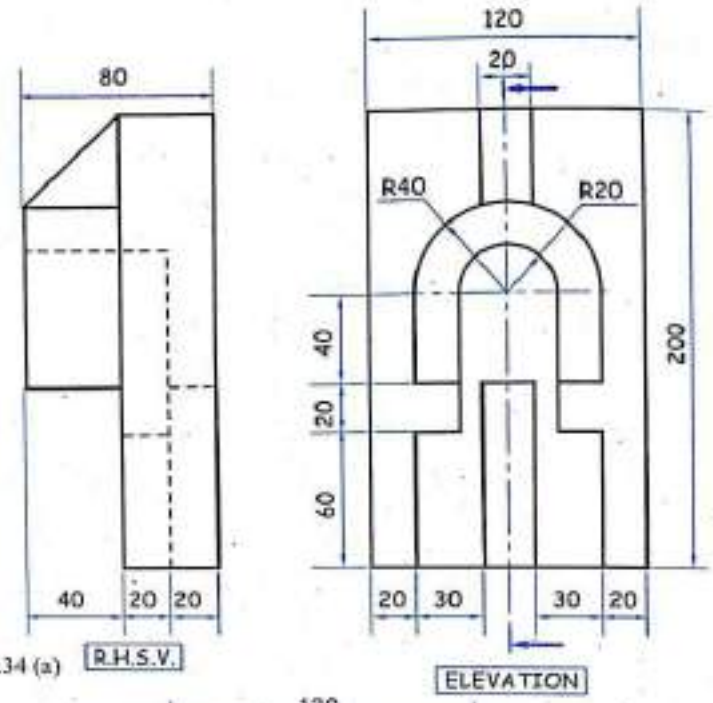

FIG. 13.34 (a)

Solution

Refer figure 13.34 (b).

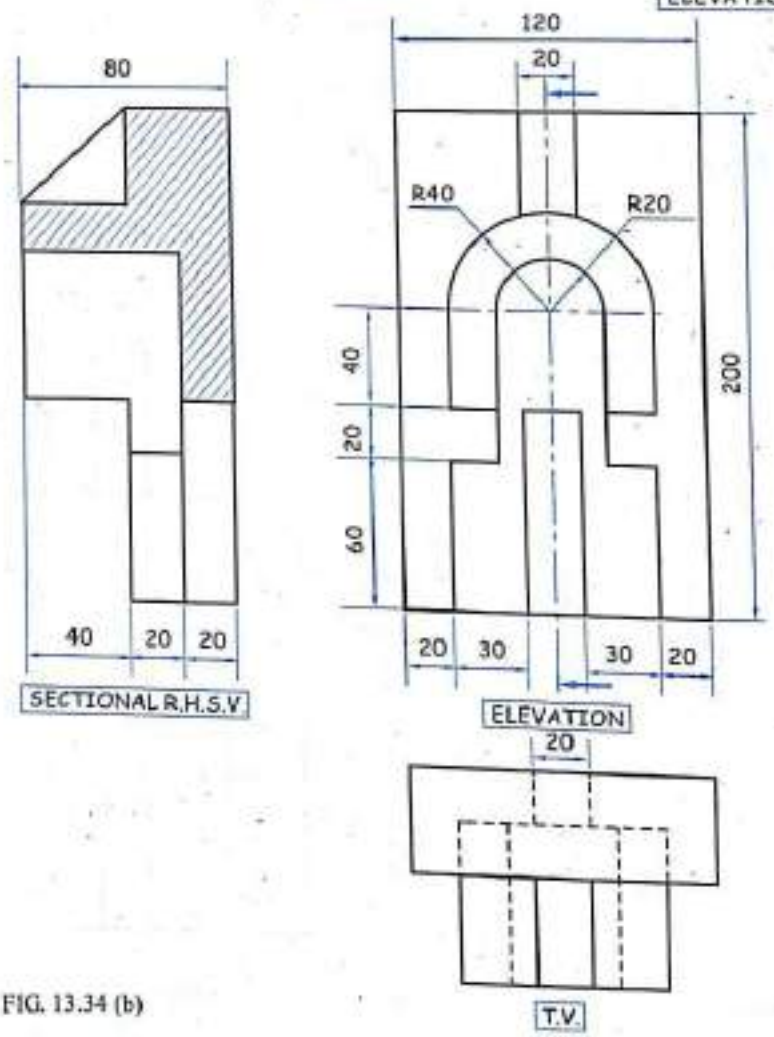

FIG. 13.34 (b)

Scanned by CamScanner

Problem 35

Draw :

(i) Sectional front view (Section *A-A*).

(ii) Top view.

(iii) Sectional right hand side view (Section *B-B*).

(Dec. '06, M.U.)

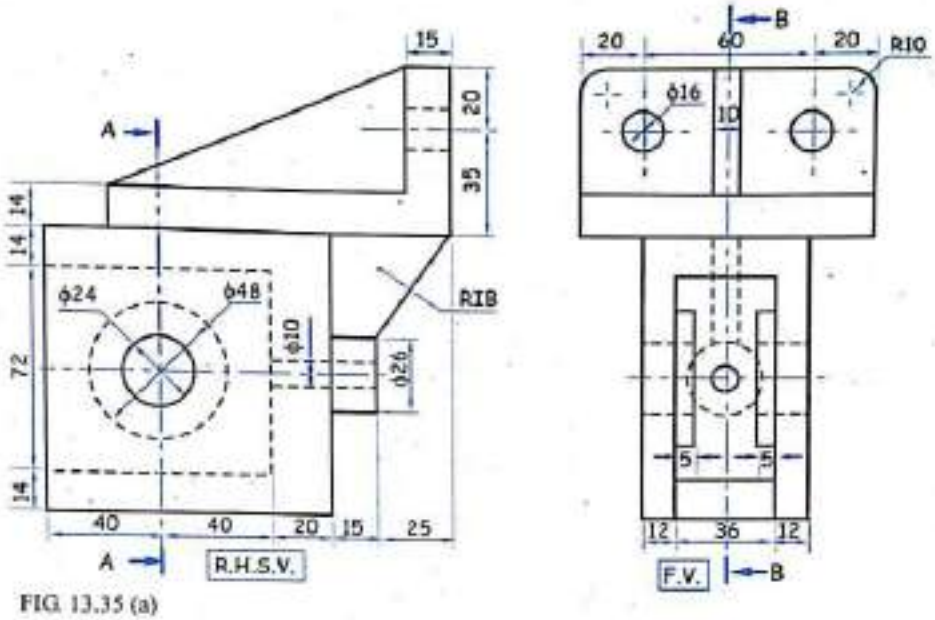

FIG. 13.35 (a)

Solution

Refer figure 13.35 (b).

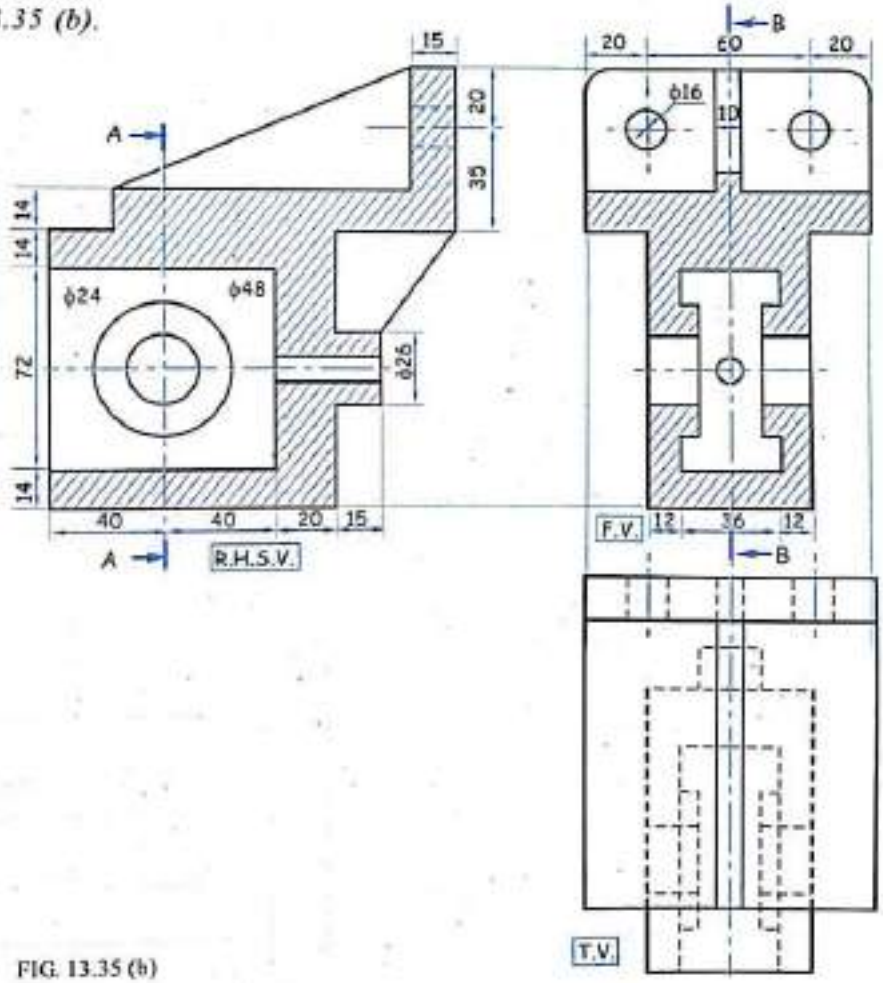

FIG. 13.35 (b)

Scanned by CamScanner

Problem 36

Figure 13.36 (a) shows two views of a machine part. Draw to scale full size, the following view.

(i) Sectional F.V. section *A-A*. (ii) Sectional R.H.S.V. across section plane *B-B*.

(iii) T.V. (showing all the required dotted lines). Use first angle method of projection.

(May '93, Dec. '07, May '12, M.U.)

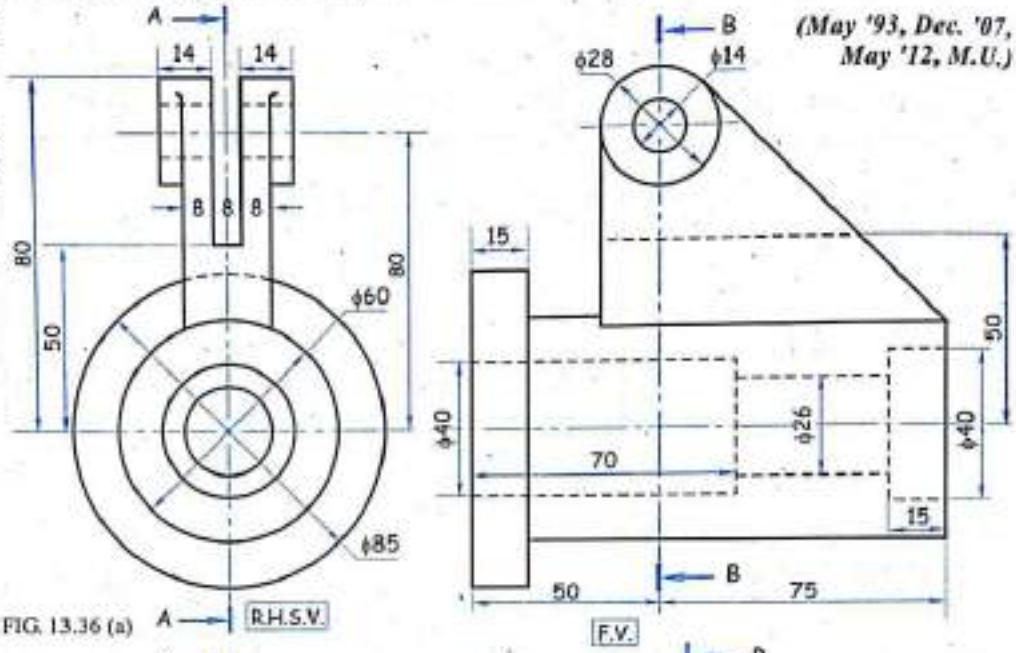

FIG. 13.36 (a)

Solution

Refer figure 13.36 (b).

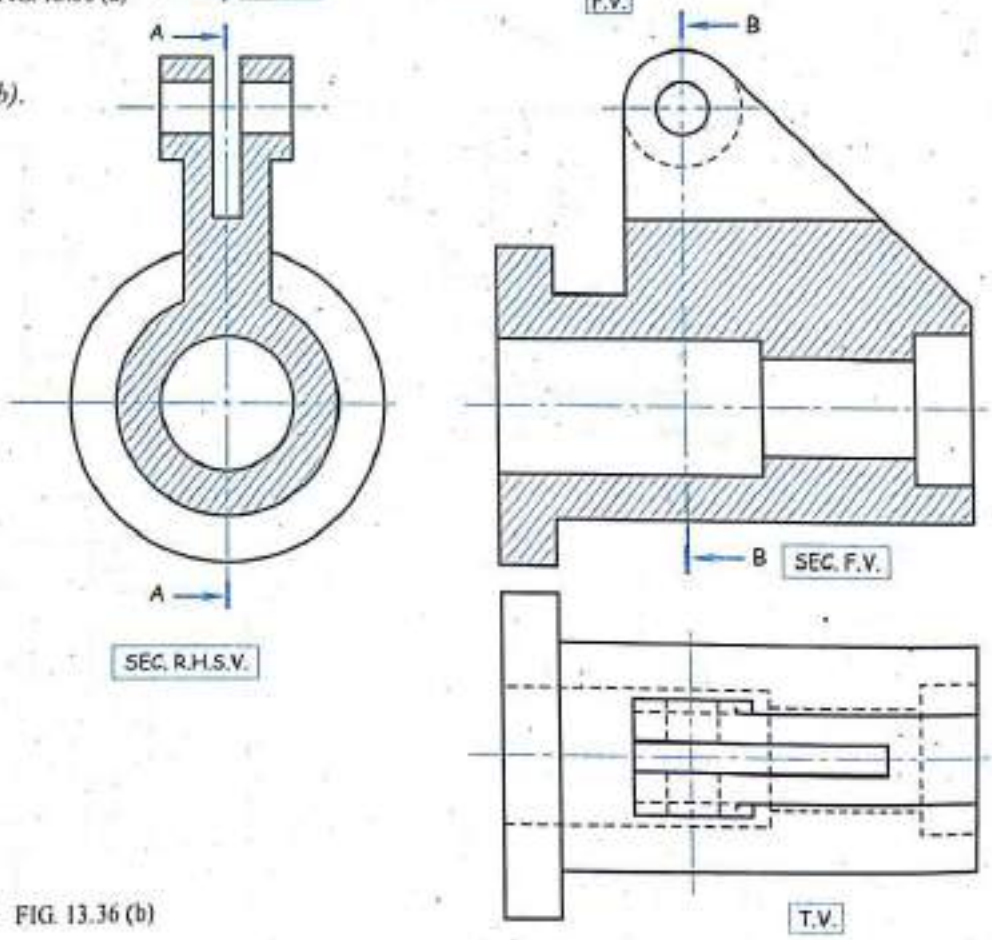

FIG. 13.36 (b)

Scanned by CamScanner

Problem 37

Figure 13.37 (a) shows F.V. and S.V.

Draw :

(i) Sectional F.V. along *AA*.

(ii) Sectional L.H.S.V. along *BB*.

(iii) Top view.

Insert at least six dimensions (major).

(May '08, M.U.)

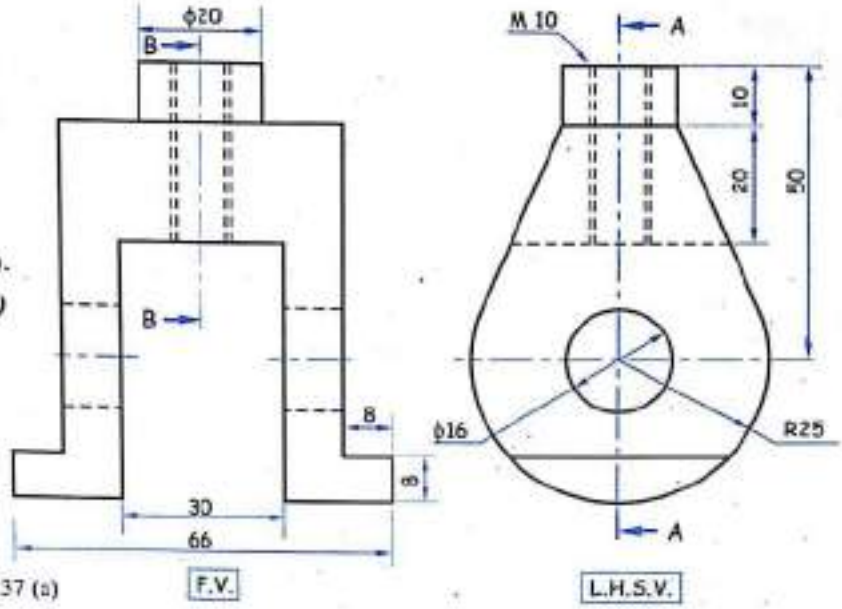

FIG. 13.37 (a)

Solution

Refer figure 13.37 (b).

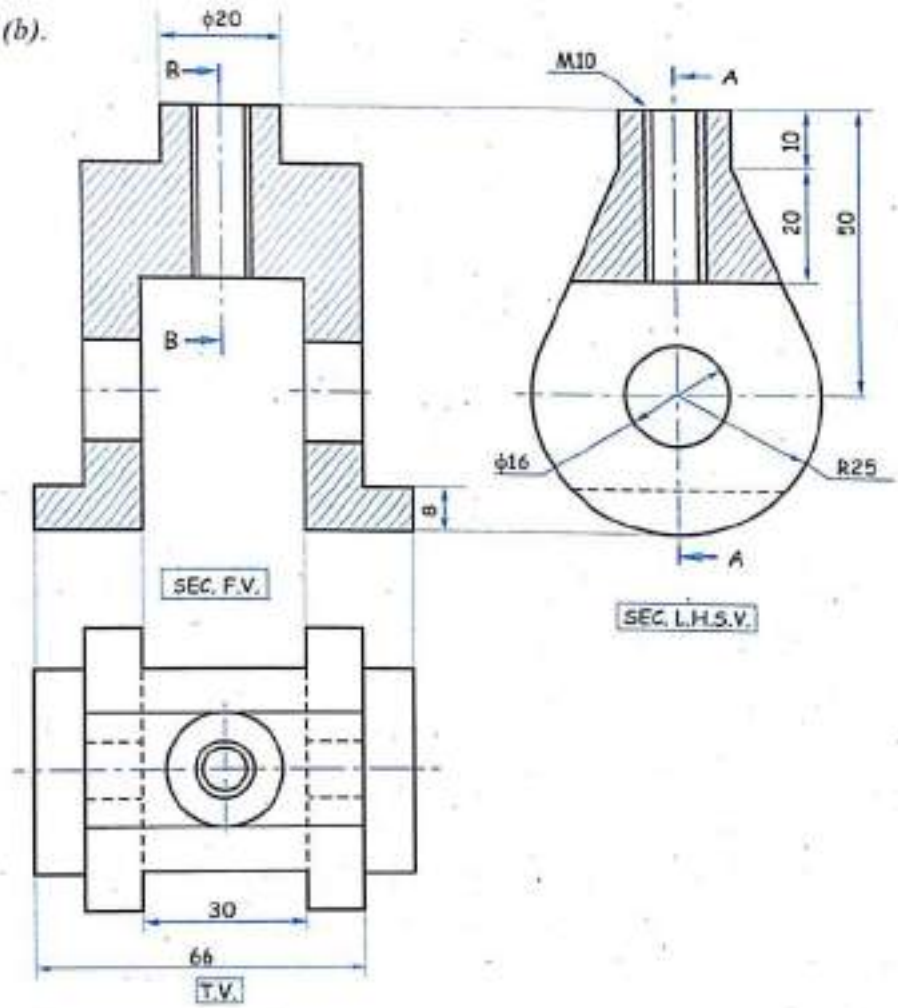

FIG. 13.37 (b)

Scanned by CamScanner

Problem 38

Figure 13.38 (a) shows front view and top view of an object.

Draw the following views :

(i) Sectional F.V. along *A-A*.

(ii) T.V.

(iii) Sectional R.H.S.V. along *B-B*.

(iv) Insert at least 8 major dimensions.

(Dec. '08, M.U.)

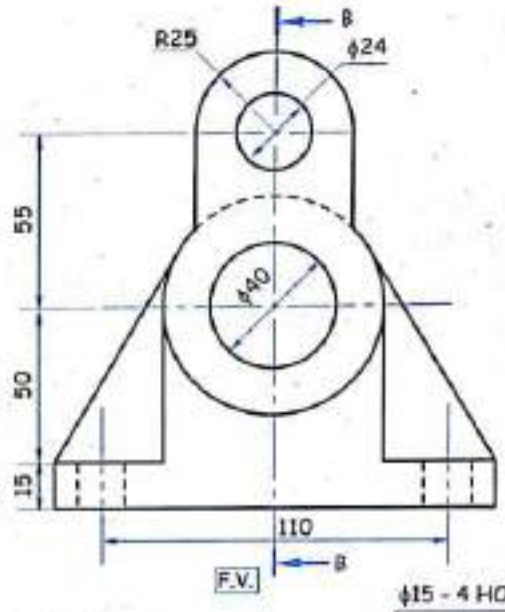

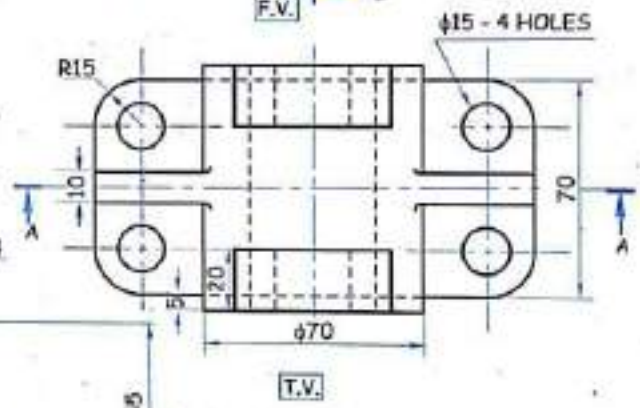

FIG. 13.38 (a)

Solution

Refer figure 13.38 (b).

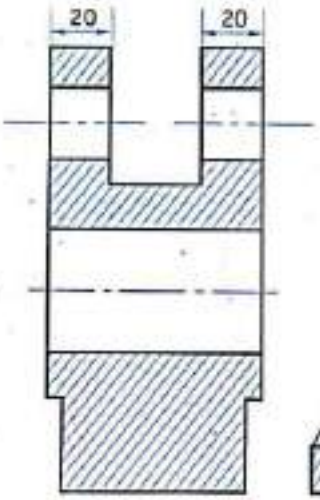

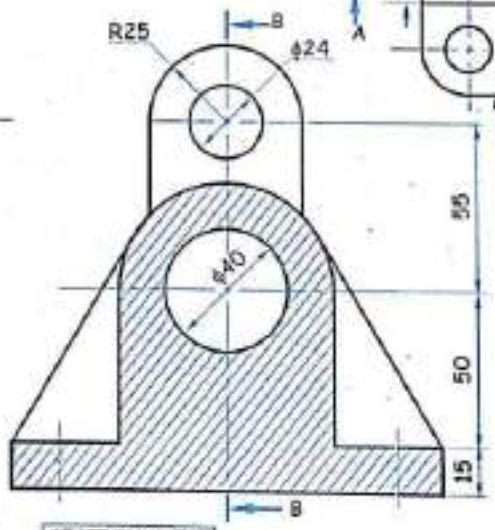

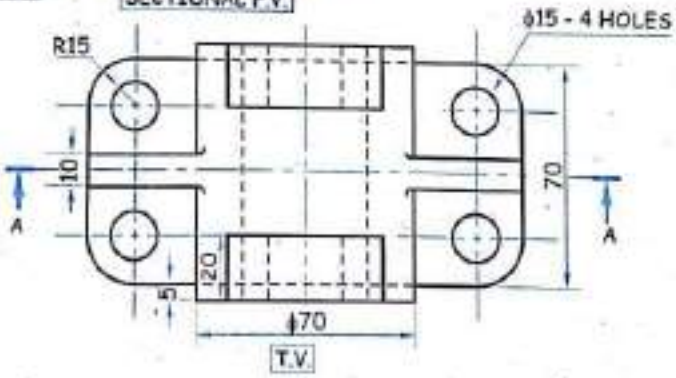

FIG. 13.38 (b)

Scanned by CamScanner

Problem 39

Refer *figure 13.39 (a)* and draw :

(i) Sectional F.V. along *S-S*

(ii) L.H.S.V.

(iii) Given T.V.

(Dec. '09, Dec. '10, M.U.)

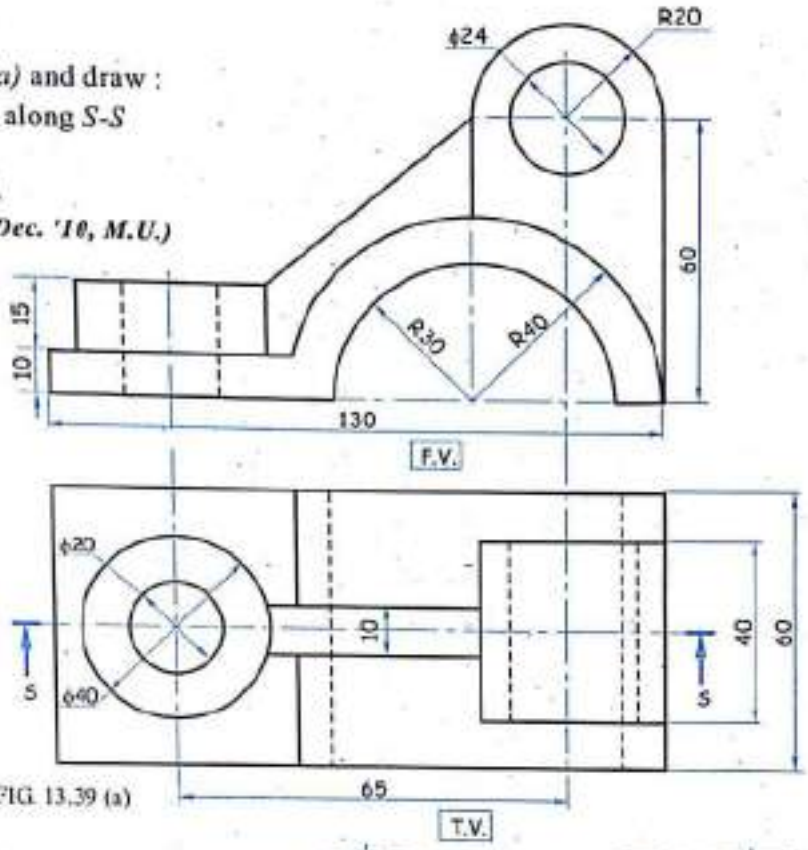

FIG. 13.39 (a)

Solution

Refer figure 13.39 (b).

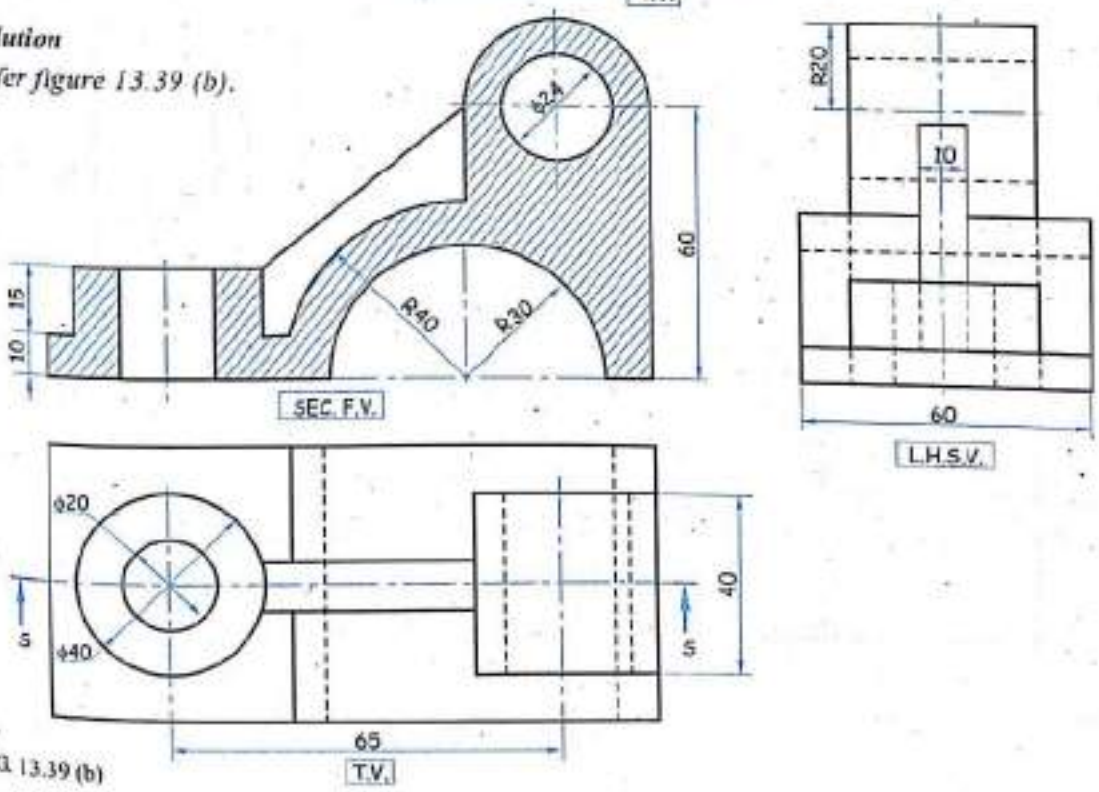

FIG. 13.39 (b)

Scanned by CamScanner

Problem 40

Figure 13.40 (a) shows F.V. and T.V. of an object. Draw following views :

(i) Sectional F.V. along section *X-X*.

(ii) Top view.

(iii) Missing left hand side view.

Insert at least ten major dimensions.

(May '10, M.U.)

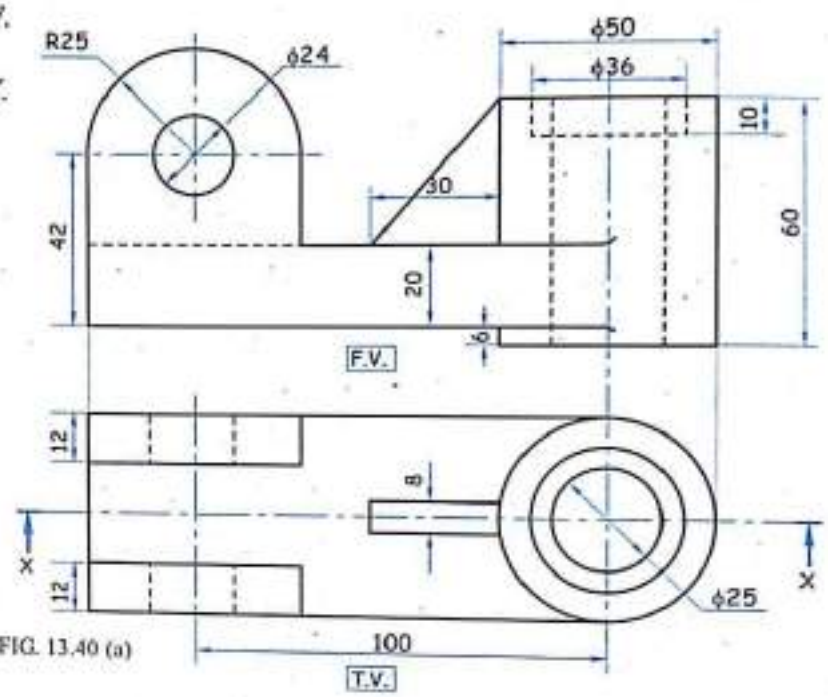

FIG. 13.40 (a)

Solution

Refer figure 13.40 (b).

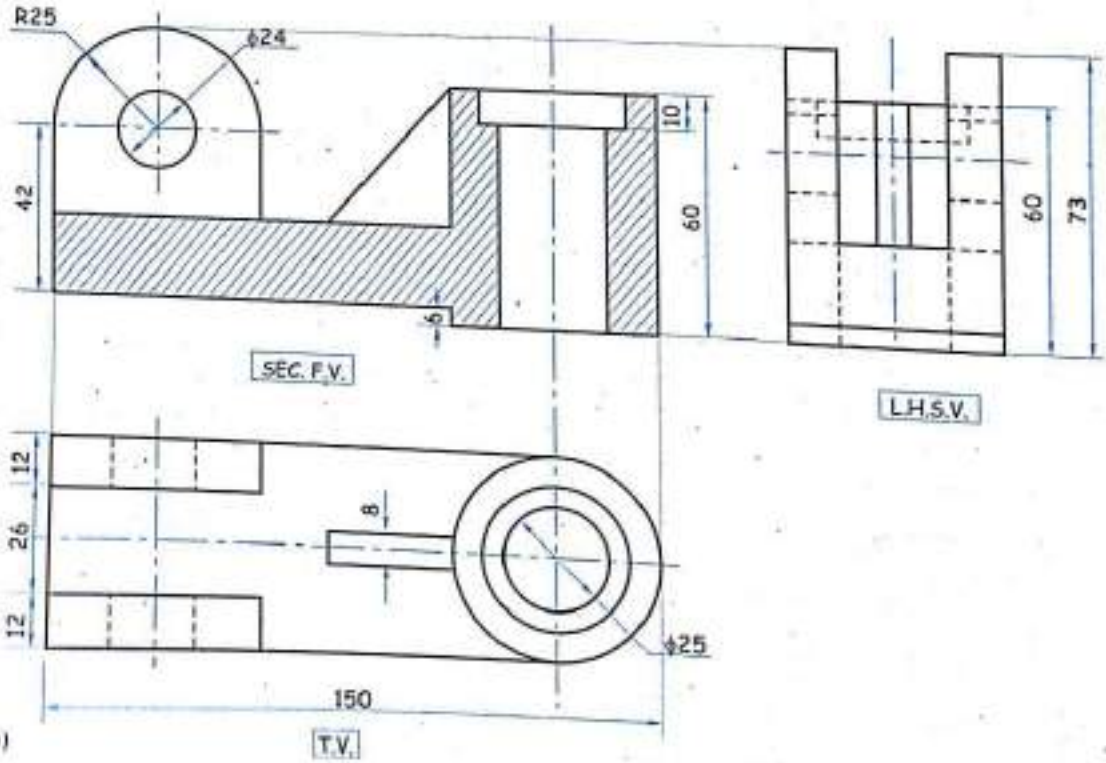

FIG. 13.40 (b)

Scanned by CamScanner

13.6 Exercise

1. *Figure 13.41* shows two views of casting. Draw
   (i) Sectional front view, section along *B-B*.
   (ii) Side view from left.
   (iii) Sectional top view, section along *A-A*.

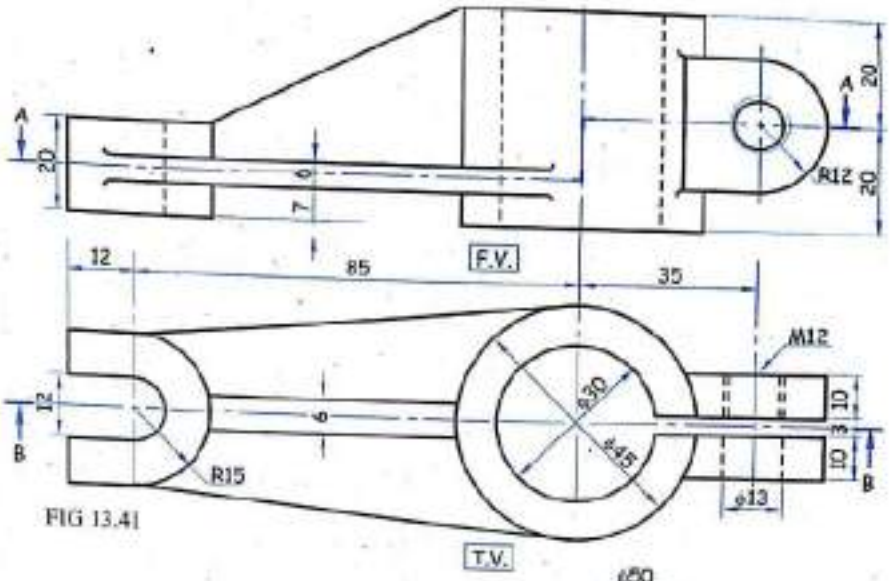

FIG 13.41

2. *Figure 13.42* shows elevation and plan of a machine part. Draw to full scale the following views.
   (i) Sectional front view, section along *A-A*.
   (ii) Top view.
   (iii) Right hand side view.

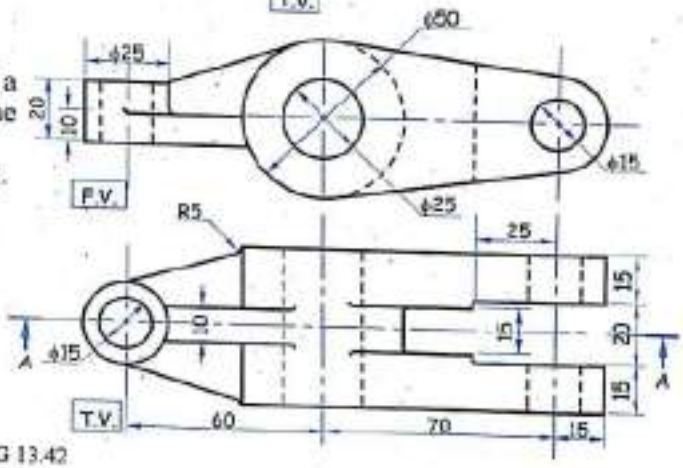

FIG 13.42

3. Two view of an object are shown in *figure 13.43*. Draw by the other method of projection the following views.
   (i) Sectional front view, along section line *C-C*.
   (ii) Top view.
   (iii) Right hand side view.

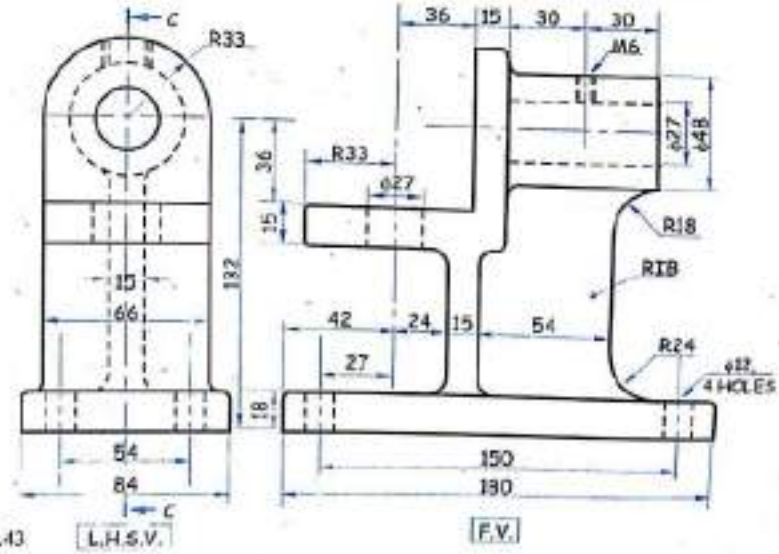

FIG 13.43

Scanned by CamScanner

4. Draw :

(i) Sectional front view along (Section *B-B*).

(ii) Sectional left hand side view (Section *A-A*).

(iii) Top view.

Refer figure 13.44.

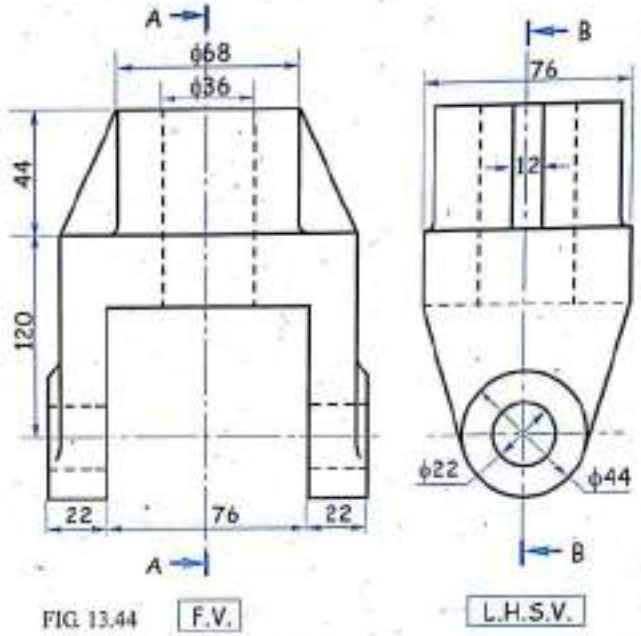

FIG. 13.44

5. Draw :

(i) Front view.

(ii) Top view

(iii) Right hand side view (Section *A-A*).

Refer figure 13.45.

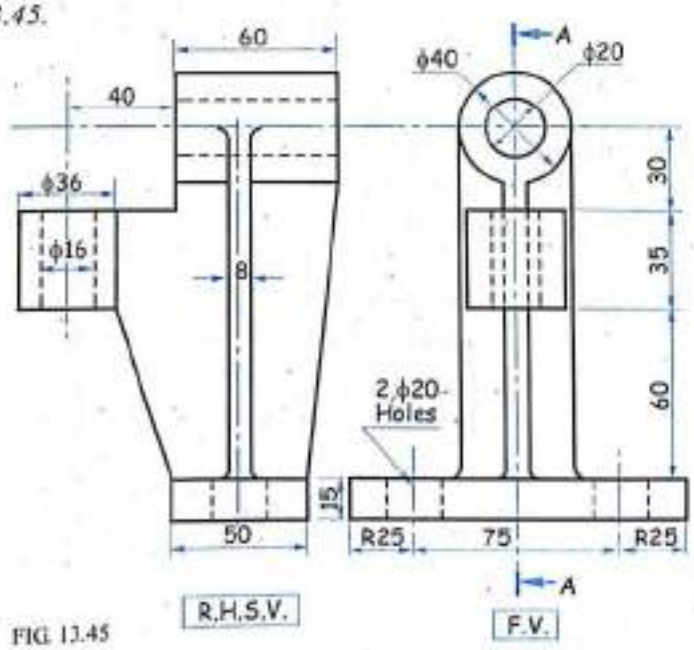

FIG. 13.45

Scanned by CamScanner

6. Draw : (i) Sectional front view (Section *B-B*). (ii) Sectional right hand side view (Section *A-A*). (iii) Top view. *Refer figure 13.46.*

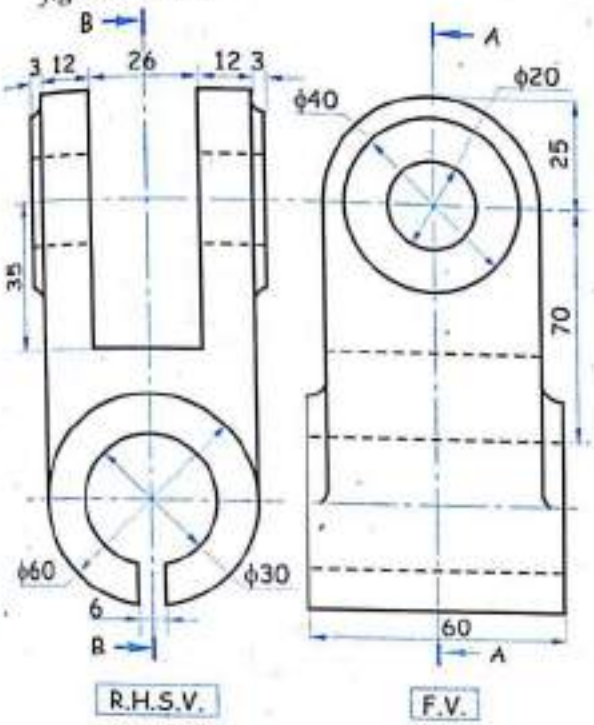

FIG. 13.46

7. Draw : (i) Front view. (ii) Top view. (iii) Sectional left hand side view (Section *A-A*). *Refer figure 13.47.*

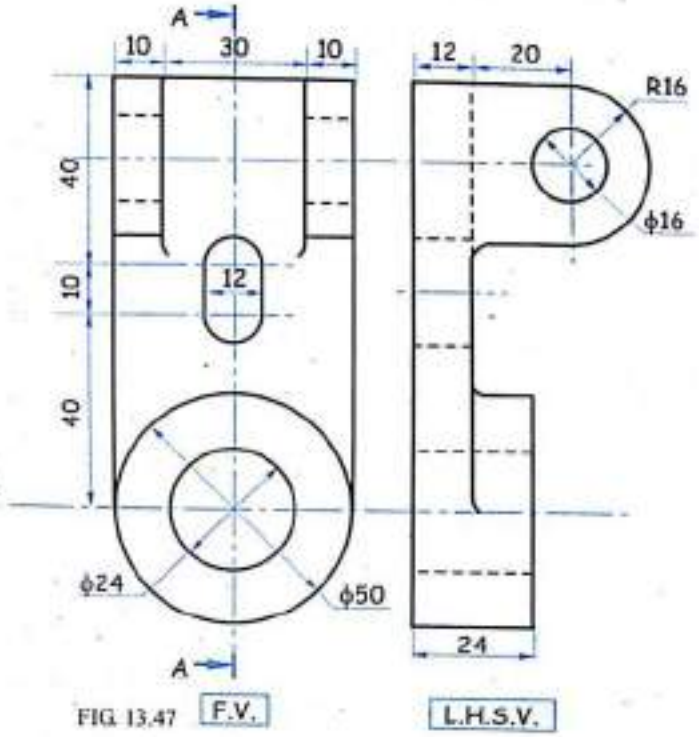

FIG. 13.47

8. Draw : (i) Sectional front view (Section *A-A*). (ii) Top view (Section *B-B*). (iii) Right hand side view. *Refer figure 13.48.*

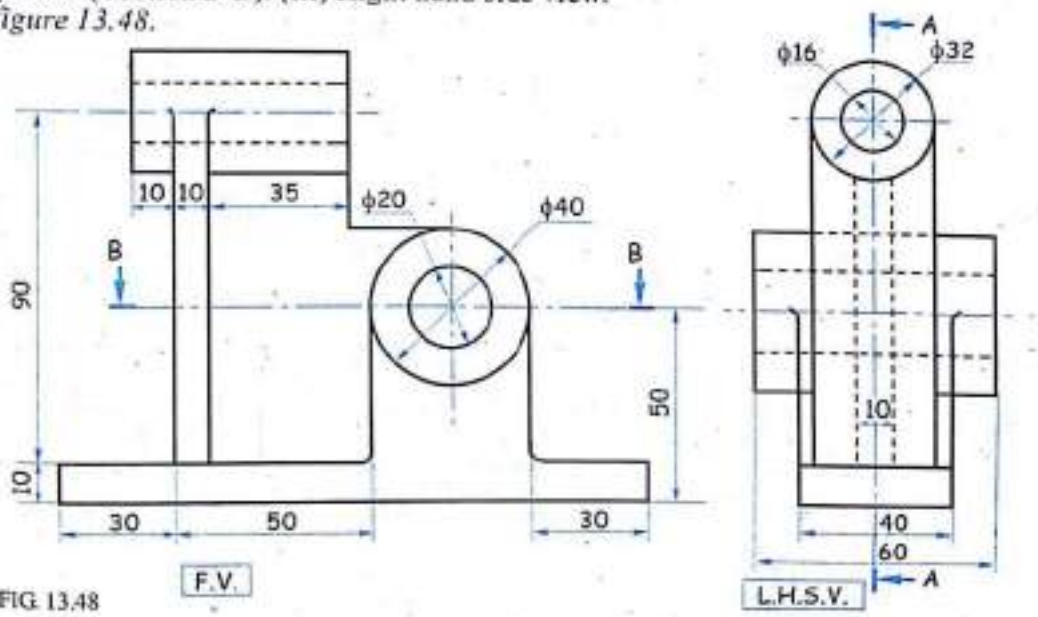

FIG. 13.48

Scanned by CamScanner

9. Draw : (i) Sectional front view. (ii) Top view. (iii) Right hand side view.
Refer figure 13.49.

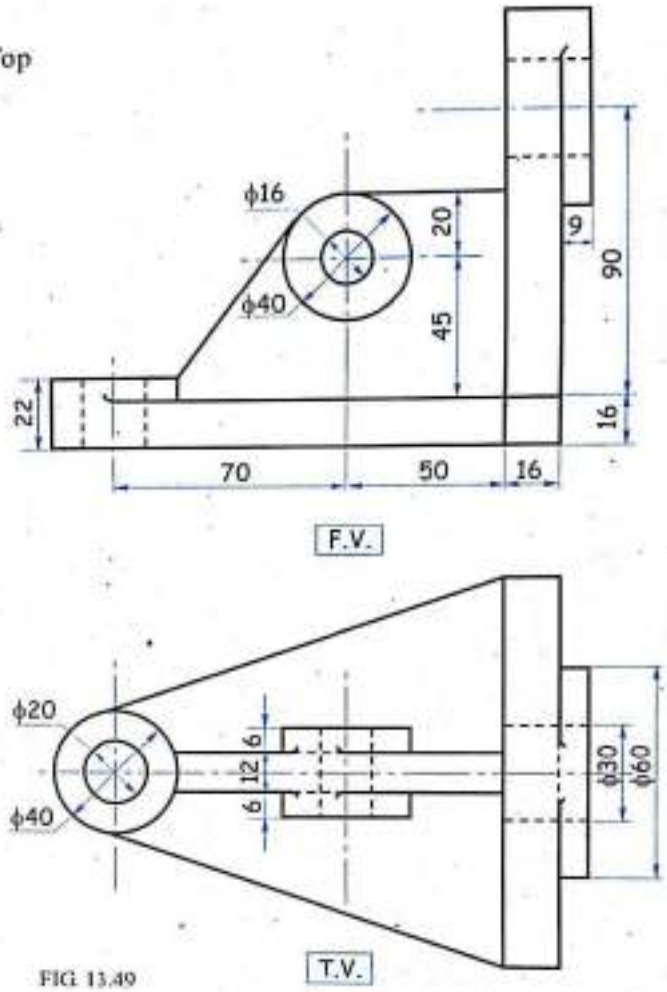

FIG. 13.49

10. Draw : (i) Sectional front view.
(ii) Sectional left hand side view.
(iii) Top view.
Refer figure 13.50.

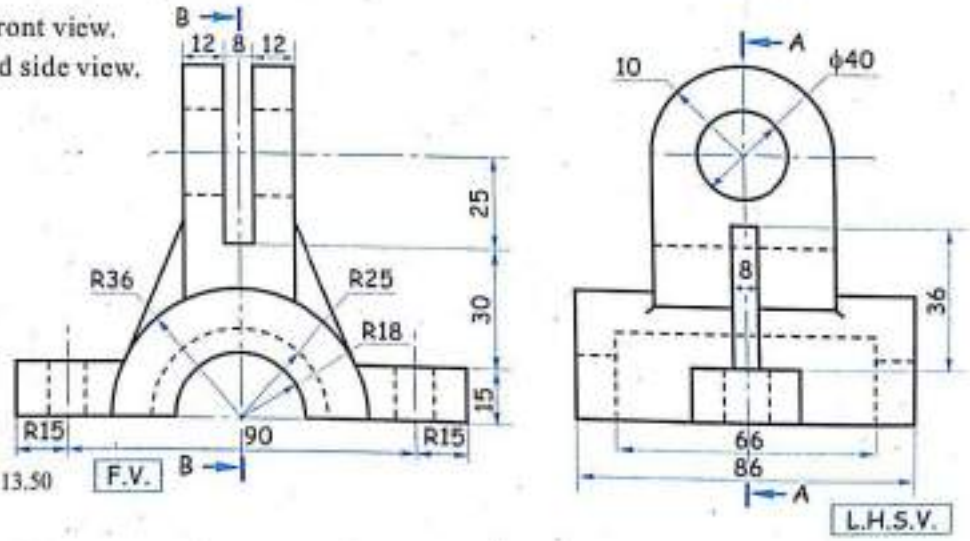

FIG. 13.50

Scanned by CamScanner

(11.) Draw : (i) Front view. (ii) Top view. (iii) Sectional left hand side view (Section *A-A*).
Refer figure 13.51.

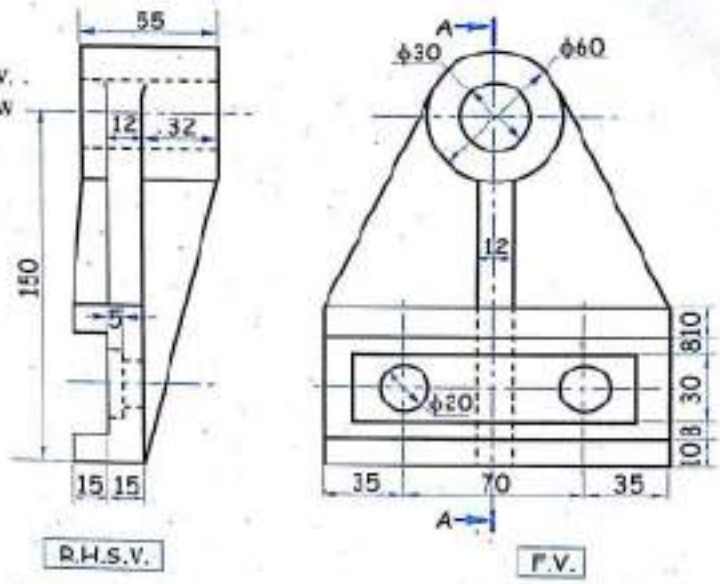

FIG. 13.51

(12.) Draw the following views : (i) Sectional front view. (ii) Sectional right hand side view. (iii) Top view. *Refer figure 13.52.*

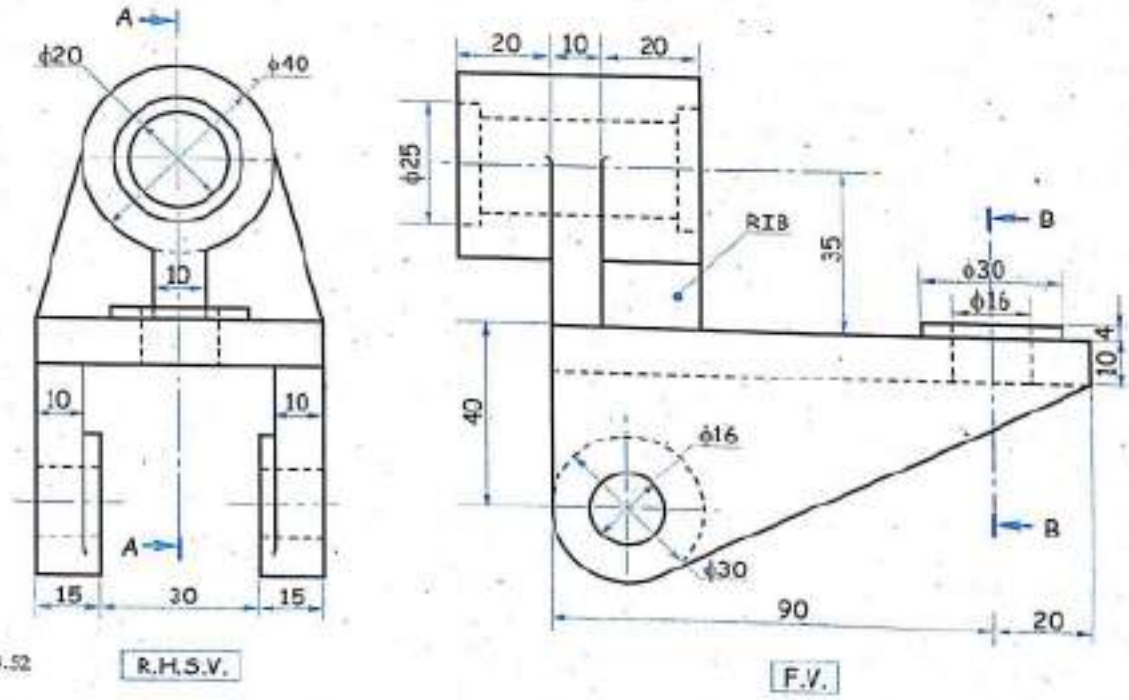

FIG. 13.52

Scanned by CamScanner

14 INTRODUCTION TO COMPUTER 2-D DRAFTING

14.1 Introduction

Computer has made the current period, one of a revolutionary change in every field. Engineering drawing is a graphic language which allows human and computer to work together. Computer is a machine which understands the language of 1's and 0's. It stores information which may be either text or graphic or both, in the form of these binary numbers. One of the most remarkable feature of the computer is that the information stored in it can be continuously updated, corrected, evaluated and if required can be printed (in the original text or graphics form) on paper.

Computer Aided Drafting (CADr) is a process which helps in preparing a drawing/graphic on the screen of a computer. The software packages used for CADr are developed with inherent basic geometric elements such as points, lines, circles, curves etc., which are required to create a drawing/graphic. CADr can be used for constructing any graphical image on the computer screen with large flexibilities such as enlargement, reduction, move, copy, rotation etc., as per the convenience of the designer.

Prior to CADr one must have basic knowledge of engineering drawing which will help in developing skills which are used in industry and in the outside world while communicating technical information.

Engineering drawing teaches the principles of accuracy and clarity in presenting the information necessary to develop a design.

14.2 Advantages of Computer Aided Drafting

1. Accurate drafting.
2. Addition and deletion provision.
3. Flexibility given to the designer/user to modify drawings.
4. Effective time utilization.
5. No scrap work so zero wastage while drawing.
6. Effective manpower utility.
7. Inbuilt dimensioning facility.
8. Easy and uniform filling of hatching in required area.

Scanned by CamScanner

9. Output can be printed on paper. The size of the output can be matched to the size of the paper.
10. Allows user to select the units of measurement (such as millimeter or inches).

14.3 CADr Software

It is a software program which gives necessary sequential instruction to the system for operating a command. There are four categories of software,

1. Graphic instructions.
2. Software for the operation of the system.
3. Application software.
4. User developed software.

Variety of software packages used for drafting are available such as Microsoft Office, Pagemaker, Corel Draw, AutoCAD, Microstation, CorelCAD, Photofinish, Paint etc.

As per the syllabus we intend to discuss 2-D drafting only. We will discuss 2-D drafting using the AutoCAD software package.

14.4 About AutoCAD

AutoCAD is a drafting and design software package specially designed for perfect and accurate drawing of engineering designs. Through this software, one can prepare designs and drawings of mechanical structures, parts of machines, plans of buildings and various other frameworks or ensembles.

AutoCAD gives its user the flexibility to modify a drawing or design with respect to shape, size, style and orientation using various commands. AutoCAD is widely used by mechanical and civil engineers for drawing of machine parts and assembly drawings in 2 and 3 dimensions.

Architectural drawings, mechanical assemblies, transportation, retail space modelling, aeronautic and marine design, cartography, assembly line production diagrams and residential design are but a few examples where AutoCAD is extensively used.

Here we introduce to you AutoCAD using AutoCAD 2000 as the default version.

14.4.1 Using the Windows Toolbar Option

AutoCAD 2000 comes with a set of standard toolbars. These toolbars are icons of the frequently used commands grouped together for easy access. To start a command, simply click the icon and follow the prompts or provide information as required in the dialog box.

14.4.2 Using Command Line Option

All AutoCAD commands can be started by typing the command at the command prompt. These commands can also be selected from a pull-down menu or can be picked from the toolbar. But note that all commands are not available from the pull-down menu or toolbar. Most commands will either execute immediately or prompt you for further action in the floating command window or in a dialog that pops open. Dialogs allows one to see all the options necessary for an operation at one time. When a dialog opens, the cursor changes from a crosshair to an arrow, which one positions on the item one wants by moving and clicking the mouse at the appropriate place in the dialog box.

Scanned by CamScanner

(Select the AutoCAD 2000 icon to start the programme)

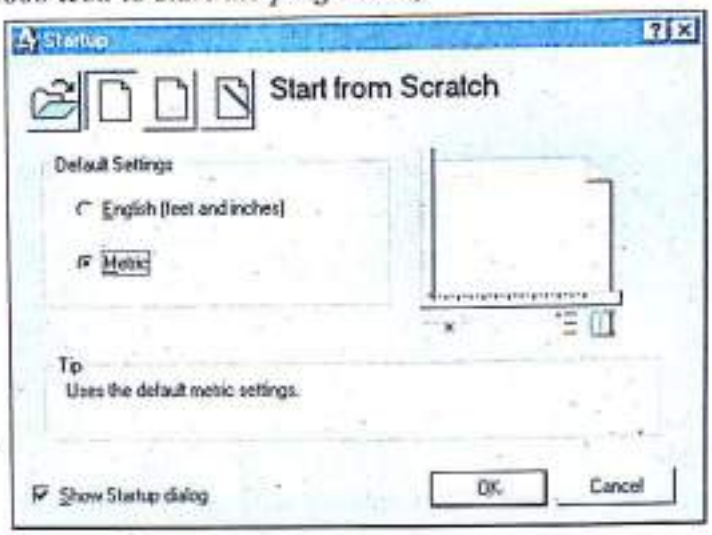

(Select the metric radio button in the rectangular area filled default settings.)

Click OK

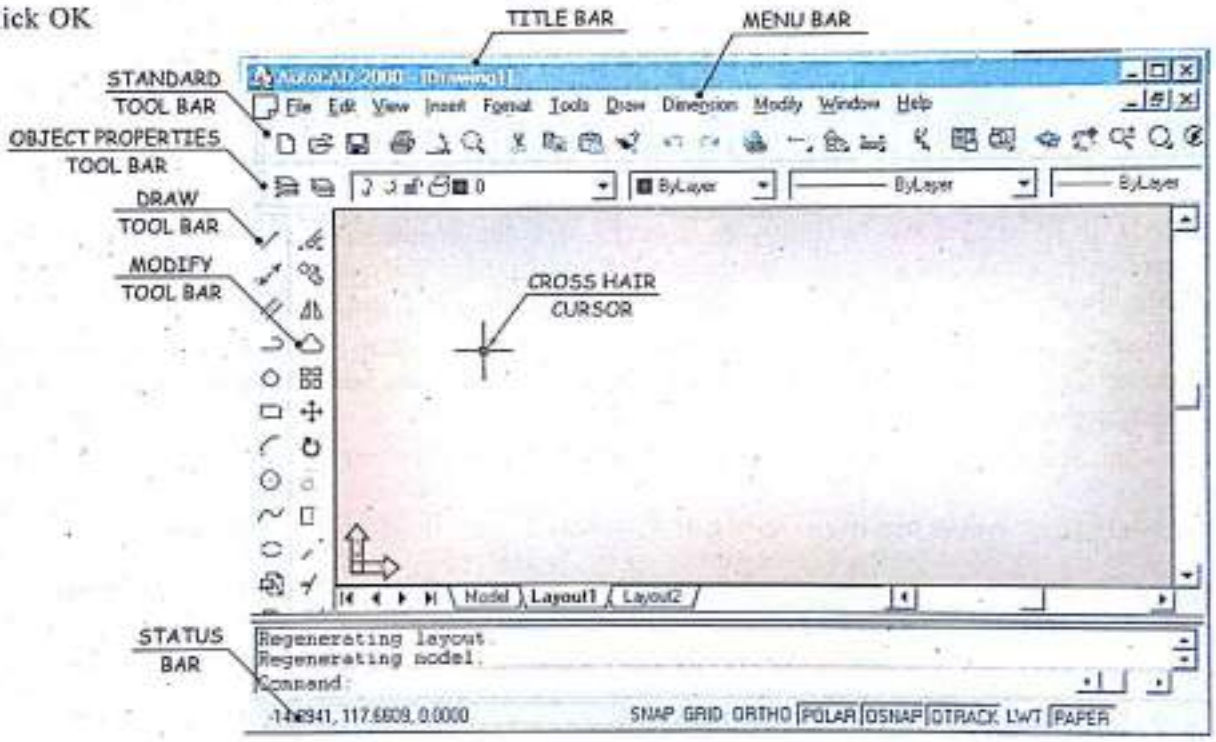

Note : 1. Sentence written in brackets ( ) indicate procedure to be followed.

2. Selected object line on screen is shown by dotted line.

3. This software package is case insensitive. (i.e. A or a mean the same)

4. For operating any command either type the command at the command prompt or use the toolbar option. While explaining a command we have shown all the possibilities for operating that command.

5. While drawing figures in this chapter, we have followed the same convention regarding the center lines, dimension lines, thick lines etc. as in the earlier chapters. But note that on the computer screen all lines appear of equal thickness. However, one can change their thickness using `linetype` *command.*

Scanned by CamScanner

Some Basic Commands Used in Computer Aided Drafting

1. Point

Point is a command which creates a point object.

Command : **Point (Po)** ↵
Menu : **Draw > Point > Single point/Multiple point**
Draw Toolbar : **Point**
Specify a point : *(Enter the point either by coordinates or select anywhere on screen).*

2. Line

Line is a command used to draw a line or a series of line segments from a point to another point.

Command : **Line (L)** ↵
Menu : **Draw > Line**
Draw Toolbar : **Line**
LINE Specify First Point : *(Select a point to begin the line)*
Specify next point or [Undo]* : *(Select the end point of the line)*
Specify next point or [Undo] : *(Select the end point of the line)*
Specify next point or [Close/Undo] : *(To draw a series of consecutive lines, continue the selection of points as required OR to exit the command press enter OR press C to connect the first start point and last end point which will close a series of lines).*

Example *Refer figure 14.1.*

Command : **L** ↵
LINE specify first point : **50, 70** ↵
Specify next point or [Undo] : **150, 120** ↵
Specify next point or [Undo] : ↵

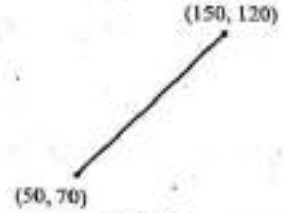

FIG. 14.1

Example *Refer figure 14.2.*

Command : **L** ↵
LINE specify first point : *(Select a point on screen)*

Specify next point or [Undo] : **@ 100 < 0** ↵
(100 represents length and 0 represents angle with horizontal)

Specify next point or [Undo] : **@ 30 < 90** ↵
(30 represents length and 90 represents angle with horizontal)

Specify next point or [Close/Undo] : **C** ↵

FIG. 14.2

*[undo] - This is an optional command which can be used to delete the last line segment drawn, if needed press U.

Note : *When coordinates are entered say (50, 70) and (150, 120) the numerical values are not displayed on computer screen as shown in the figure 14.1.*

Scanned by CamScanner

3. Offset

Offset will construct a single object parallel to selected object at a specified distance or through a specified point.

Command : **Offset (O)** ↵

Menu : **Modify > Offset**

Draw Toolbar : **Offset**

Specify offset distance or [Through] : *(There are two options in this case i.e offset distance and through).*

Example

Offset Distance

If a value is entered then all offset performed in the current command will be at that distance and it will continue offsetting object at the entered distance till ENTER is pressed.

An example is shown where this command is used to modify the given *figure 14.3.*

FIG. 14.3

Command : O ↵

Specify offset distance or [Through] : *(Say 10)* ↵

Select object to offset : *(Select in view)*

Specify point on side to offset : *(Click on the required side of selected object)*

Select object to offset or <exit> : ↵

Example

Offset Through

This option is used when different objects are to be offset through different distances.

An example is shown where this command is used to modify the given *figure 14.4.*

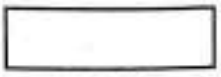

FIG. 14.4

Command : **O** ↵

Specify offset distance or [Through] : **T**

Select object to offset or <exit> : *(Select in view)*

Specify through point : *(Say 10)* ↵

Select object to offset or <exit> : *(Select another object in view)*

Specify through point : *(Say 5)* ↵

Select object to offset or <exit> : ↵

Scanned by CamScanner

4. Polygon

This command is used to construct a regular polygon, sides ranging from 3 to 1024. Every polygon is treated as a single object. One can define a polygon by inscribed circle radius, circumscribed circle radius or length of one edge.

Example : Draw a hexagon with side equal to 30 mm. *Refer figure 14.5.*

Command : **Polygon (Pol)** ↵
Menu : **Draw > Polygon**
Draw Toolbar : **Polygon**

POLYGON Enter number of sides : *(Say 6)* ↵
Specify center of Polygon or [Edge]* : *(Select any point on screen)*
Enter an option [Inscribed in circle / circumscribed** about circle] : I↵
Specify radius of circle : *(Say 30)* ↵

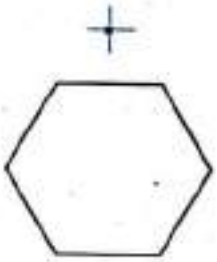

FIG 14.5

5. Circle

Circle can be constructed using various methods. The initial settings will be by selecting center and using diameters or radius as a parameter.

Command : **Circle (C)** ↵
Menu : **Draw > Circle > Centre, Radius/Centre, Diameter/2 Points/Tan, Tan, Radius/Tan, Tan.**
Draw Toolbar : **Circle**

Example: Draw a circle with diameter equal to 80 mm. *Refer figure 14.6..*

Center Radius Method

Command : **Circle (c)** ↵
CIRCLE Specify center point for circle or [3p / 2p / Ttr (tan tan radius)] : *(Select any point on screen as center for circle)*

Specify radius of circle or [Diameter]*** : (Say 40) ↵

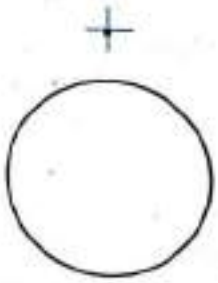

FIG 14.6

* [Edge] : In case of edge first enter E and then specify the first end point and then the second end point of any one edge of the required polygon.

** Circumscribed about circle : Enter C instead of I.

*** Diameter : In this case first enter D and then enter the diameter of circle.

Scanned by CamScanner

Example : Draw a circle passing through 2 points having coordinate (40, 50) and (80, 100). *Refer figure 14.7.*

2P (2 Point Circle)

Command : C ↵

CIRCLE Specify center point for circle or [3p/2p/Ttr (tan tan radius)] : **2P**↵

Specify first end point of circle's diameter : *(Say 40,50)*↵

Specify second end point of circle's diameter : *(Say 80,100)*↵

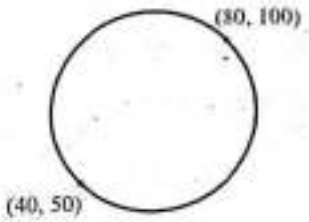

FIG. 14.7

Example : Draw a circle passing through 3 points having coordinate (50, 60); (100, 70) and (80, 120). *Refer figure 14.8.*

3P (3 Point Circle)

Command : C ↵

CIRCLE Specify center point for circle or [3p/2p/Ttr (tan tan radius)] : **3P**↵

Specify first end point on circle : *(Say 50, 60)*↵

Specify second end point on circle : *(Say 100, 70)*↵

Specify third end point on circle : *(Say 80,120)*↵

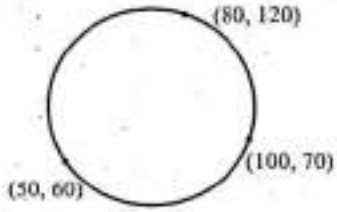

FIG. 14.8

Example : Draw the required circle with tangent tangent radius method to two given circles. *Refer figure 14.9.*

Ttr (Tangent tangent radius)

Command : C ↵

CIRCLE Specify center point for circle or [3p/2p/Ttr (tan tan radius)] : **Ttr**↵

Specify point on object for first tangent of circle : *(Select any point on circle 1)*

Specify point on object for second tangent of circle : *(Select any point on circle 2)*

Specify radius of circle : *(Say 30)*↵

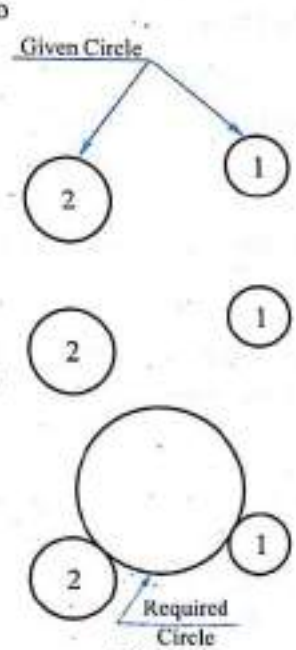

FIG. 14.9

Scanned by CamScanner

6. Arc

Arc is a part of circle and can be drawn by various methods.

Command : **Arc (A)** ↵

Menu : **Draw > Arc > Preset Options**

Draw Toolbar : **Arc**

Example : Draw an Arc of circle passing through three points having coordinates (40, 60); (80, 100) and (70, 30). *Refer figure 14.10.*

Three Point Arc

Command : **Arc (A)** ↵

ARC Specify start point of arc or [CEnter] : *(Say 40, 60)* ↵

Specify second point of arc or [CEnter/ENd] : *(Say 80,100)* ↵

Specify end point of arc : *(Say 70, 30)* ↵

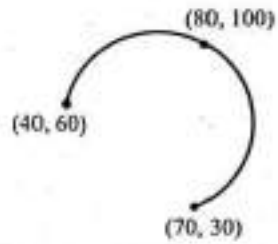

FIG. 14.10

Example : Draw an Arc of circle passing through two points having coordinates (70, 30) and (10, 20) and center point at coordinate (10, 20). *Refer figure 14.11.*

Start, Center, End

Command : **A** ↵

ARC Specify start point of arc or [CEnter] : *(Say 70, 30)* ↵

Specify second point of arc or [CEnter/ ENd] : **C** ↵

Specify center point of arc : *(Say 10, 20)* ↵

Specify end point of arc or [Angle/chord length] : *(Say 20, 80)* ↵

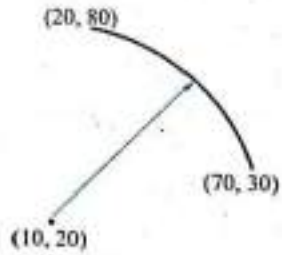

FIG. 14.11

Example : Draw an Arc of circle passing through start coordinate (80, 15) center coordinate (10, 15) and included angle 45°. *Refer figure 14.12.*

Start, Center, Included Angle

Command : **A** ↵

ARC Specify start point of arc or [CEnter] : *(Say 80, 15)* ↵

Specify second point of arc or [CEnter/ ENd] : **C** ↵

Specify center point of arc : *(Say 10, 15)* ↵

Specify end point of arc or [Angle/chord length] : **a** ↵

Specify included angle : *45* ↵

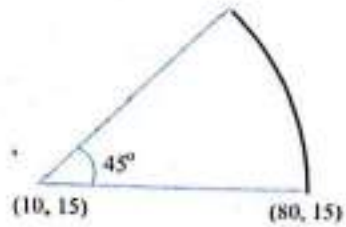

FIG. 14.12

Scanned by CamScanner

Example : Draw an Arc passing through coordinate (70, 20); (20, 80) and radius equals to 60. *Refer figure 14.13.*

Start, End, Radius

```
Command : A ↵
ARC Specify start point of arc
or [CEnter]                          : (Say 70, 20)↵
Specify second point of arc or
[CEnter/ENd]                         : e↵
Specify end point of arc             : (Say 20, 80)↵
Specify center point of arc or
[Angle/ Direction/ Radius]           : r↵
Specify radius of arc                : 60 ↵
```

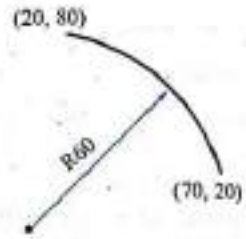

FIG 14.13

6. Ellipse

This command is used to draw an ellipse by specifying two axis points and a center point major and minor axes or the center point and radius or diameter for an isometric circle i.e ellipse

```
Command      : Ellipse (EL) ↵
Menu         : Draw > Ellipse > Center/Axis, End/Arc
Draw Toolbar : [⬭] Ellipse
```

Example : Draw an ellipse passing through two points having co ordinate (100, 100) and (200, 100) as one axis and distance of other axis 30 mm on either sides *Refer figure 14.14.*

Two axis points and center point.

```
Command : Ellipse (EL) ↵
Specify axis endpoint of ellipse or
[Arc/Center]                         : (Say 100, 100)↵
Specify other endpoint of axis       : (Say 200, 100)↵
Specify distance to other axis or
[Rotation]*                          : (Say 30)↵
```

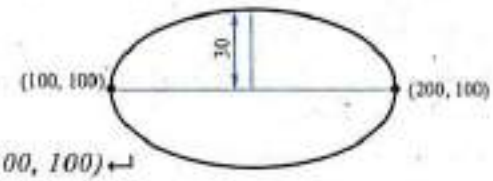

FIG 14.14

Example : *Refer figure 14.15.*

Center Point and Radius / Diameter for Isocircle

Note : For isometric circle switch on to isometric snap through Menu > Tools > Drafting settings OR by using the command D settings.

```
Command : Ellipse ↵
Specify axis endpoint of ellipse or
[Arc* /Center* /Isocircle]           : i↵
Specify center of isocircle          : (Select in view)
Specify radius of isocircle or
[Diameter]*                          : (Say 30)↵
```

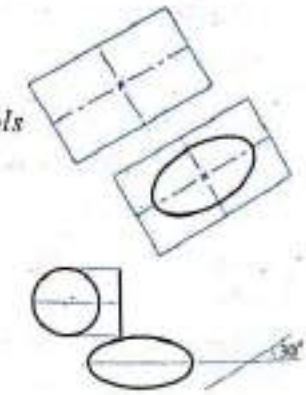

FIG 14.15

*[Rotation]: This option is used when an ellipse is to be obtained by rotating a circle at the desired angle

*[Center] : After selecting center it allows us to select the center to draw the elliptical arc.

*[Arc] : It allows us to draw an elliptical arc by entering the end points of the arc

*[Diameter] : Diameter of the isocircle has to be entered in this option.

Scanned by CamScanner

8. Ltscale

It controls the scale of line type. The default scale factor value is 1.0000. Generally the line type definitions are created for 1:1 scale. If large scale drawings are required say 1:10 setting of ltscale will help to fit the drawing scale.

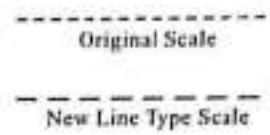


```
Command : Ltscale ↵
Enter new linetype scale factor <1.0000> : (Say 10) ↵
Regenerating model.
```

9. Change

Several properties of an object can be altered by this command. One can change the properties of objects such as colour, deviation, layer, line type, line type scales and thickness.

```
Command : Change (-ch) ↵
Select Objects : (Select object in view)
Select Objects : ↵
Specify Change Point or [Properties]                    : P↵
Enter Property to Change [Colour / Elev /
LAyer / LType / ltScale / LWeight /
Thickness]                                              : C↵
Enter New Colour                                        : Blue↵
Enter Property to change [Colour / Elev /
LAyer /LType / LtScale / Lweight/
Thickness]                                              : ↵
```

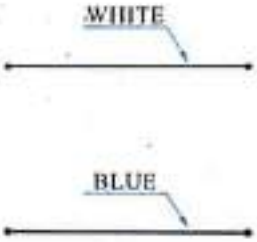

Conclusion : *The selected object will get changed to blue colour.*

10. Chprop

It means change properties and its similar to change command. One can change the property of line by selecting the object line, say for example : continuous line is converted into center line.

An example is shown where this command is used to modify the given *figure 14.16.*

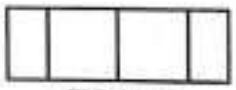

FIG. 14.16

```
Command : Chprop ↵
Select Objects                                          : (Select in view)
Select Objects                                          : ↵
Enter property to change
[Color/LAyer/ltScale/LWeight/
Thickness]                                              : lt↵
Enter New Linetype name
<By Layer>                                              : Center↵
Enter Property to Change
[Color/LAyer/LType/ltScale/ Lweight/
Thickness]                                              : ↵
```

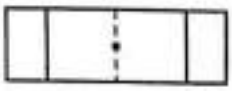

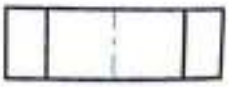

Conclusion : *The selected object (i.e. continuous line) will get changed into center line.*

Note : *Here the scale of line type is controlled by* `ltscale`*. Generally linetype considers a scale of 1:1. If required one can change the scale of linetype by* `ltscale` *command.*

Scanned by CamScanner

11. Linetype

Linetype is a command in which we can first change the properties (initial settings) of line and then with that very settings draw a required line.

(A Dialog box called linetype control box appears. Select the required line type from it or if not present load them by selecting load option and then press OK. Now the settings will be changed to the required line property and the line can be drawn using these settings)

Note : *After the drawing of these lines is completed the linetype settings have to be changed again to default settings (i.e continuous line)*

12. Trim

Trim is used to cut a drawn object as per the requirement. One or more object can be trimed to the point where they intersect with the cutting edge. The unwanted portion gets deleted in this command.

13. Erase

Erase command is used to delete one or many selected objects (unwanted) from a drawing.

14. Break

Break command is used to break an object into small integral objects as per requirement.

An example is shown where these three commands are used to modify the given *figure 14.17.*

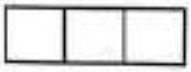

FIG. 14.17

Example : *Refer figure 14.18.*

Command : **Trim**

Menu : **Modify > Trim**

Draw Toolbar : **Trim**

Select cutting edges

Select objects : *(Select objects in view)*

Select objects : ↵

Select object to trim or [Project/Edge/Undo] : *(Select in view)*

Select object to trim or [Project/Edge/Undo] : ↵

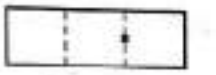

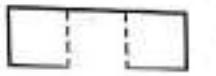

FIG. 14.18

Example : *Refer figure 14.19.*

Command : **Erase↵**

Menu : **Modify > Erase**

Draw Toolbar : **Erase**

Select objects : *(Select objects in view)*

Select objects : ↵

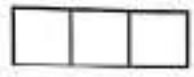

FIG. 14.19

Scanned by CamScanner

Example : *Refer figure 14.20.*

Command : **Break** ↵

Menu : **Modify > Break**

Draw Toolbar : **Break**

Select objects : *(Select objects in view)*

Specify second break point or [first point] : **F** ↵

Specify first break point : *(Select a point where the object is to be broken)*

Specify second break point : *(Select a point up to where the object is to be broken)*

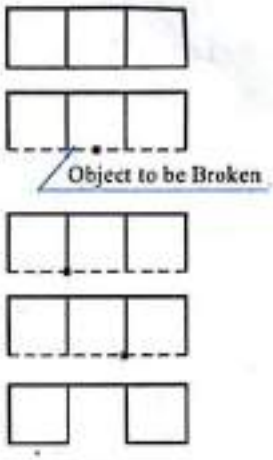

FIG. 14.20

15. Extend

It is a command used to extend the object line to meet another object line which acts as the boundary edge. One can say that this command is complimentary to trim command.

An example is shown where this command is used to modify the given *figure 14.21.*

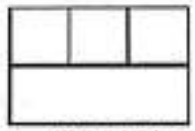

FIG. 14.21

Command : **Extend** ↵

Menu : **Modify > Extend**

Draw Toolbar : **Extend**

Select boundary edges...

Select objects : *(Select in view)*

Select objects : ↵

Select object to extend or [Project/Edge/Undo] : *(Select in view)*

Select object to extend or [Project/Edge/Undo] : *(Select in view)*

Select object to extend or [Project/Edge/Undo] : ↵

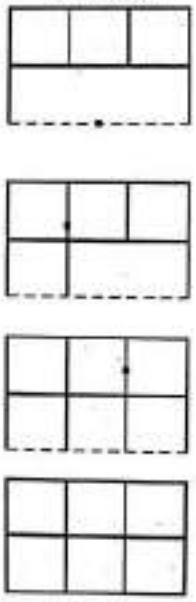

16. Rotate

This command is used to rotate an object or a group of objects to the required angle about a specific base point.

An example is shown where this command is used to modify the given *figure 14.22.*

FIG. 14.22

Command : **Rotate** ↵

Menu : **Modify > Rotate**

Draw Toolbar : **Rotate**

Scanned by CamScanner

```
Select objects                  : (Select in view)
Select objects                  : ↵
Specify base point              : (Select in view)

Specify rotation angle or
[Reference]                     : 45 ↵
```

17. Array

This command helps in making multiple copies of an object either in rectangular or polar form.

An example is shown where this command is used to modify the given *figure 14.23.*

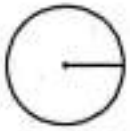

FIG. 14.23

Example

Polar Form

```
Command          : Array ↵
Menu             : Modify > Array
Modify Toolbar   : [⊞] Array
Select objects                  : (Select in view)
Select objects                  : ↵
Enter the type of array
[Rectangular/Polar]             : P ↵
Specify center point of
array                           : (Select center of circle)
Enter the number of
items in the array              : 8 ↵
Specify the angle to fill       : 360 ↵
Rotate arrayed objects ?
[Yes/No]                        : Y ↵
```

An example is shown where this command is used to modify the given *figure 14.24.*

Example

```
Command          : Array ↵
Select objects   : (Select in view)
Select objects   : ↵
Enter the type of array
[Rectangular/Polar]             : R ↵
Enter the numbers of
rows                            : 1 ↵
Enter the number of
columns                         : 3 ↵
Specify the distance
between columns                  : 40 ↵
```

FIG. 14.24

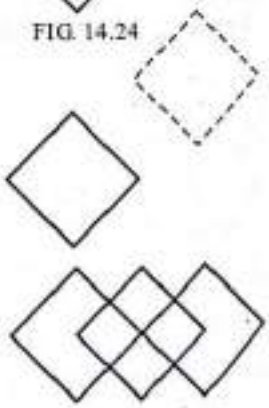

Scanned by CamScanner

18. Mirror

This command helps in making a mirror image copy of an object or a group of objects in a drawing. One can either delete the source object or retain it as required.

An example is shown where this command is used to modify the given *figure 14.25.*

FIG. 14.25

Example : *Refer figure14.26.*

Polar Form

Command	: **Mirror** ↵
Menu	: **Modify > Mirror**
Modify Toolbar	: **Mirror**
Select objects	: *(Select the object in view)*
Select objects	: ↵
Specify first point of mirror line	: *(Select in view)*
Specify second point Of mirror line	: *(Select in view)*
Delete source objects? [Yes/No]	: **N** ↵

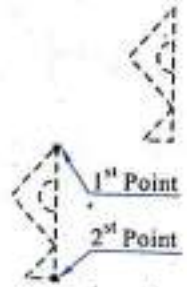

FIG. 14.26

19. Copy

This command is used to copy single object or a set of objects.

An example is shown where this command is used to modify the given *figure 14.27.*

FIG. 14.27

Example : *Refer figure14.28.*

Command	: **Copy** ↵
Menu	: **Modify > Copy**
Modify Toolbar	: **Copy**
Select objects	: *(Select in view)*
Select objects	: ↵
Specify base point or displacement or [Multiple]	: **M** ↵
Specify base point	: *(Select in view)* ↵
Specify second point of displacement or <use first point as displacement>	: *(Choose the point where the object is to be copied)* ↵

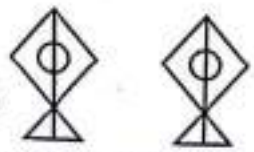

FIG. 14.28

Conclusion: *The copy command option allows to make several copies of the selected objects.*

Scanned by CamScanner

20. Move

This command is used to displace single object or a set of objects to a new location without any change in size and orientation.

Example 1 *Refer figure 14.29.*

```
Command          : Move ↵
Menu             : Modify > Move
Modify Toolbar   : [+] Move

Select objects   : (select in view)
Select objects   : ↵

Specify base point or
displacement                : (Select the point from the object in view)

Specify second point of
displacement or <use first
point as displacement>      : (Choose the location as per the requirements)
```

Conclusion : *The selected objects move to the required position and vanish from the original position without changing size and orientation.*

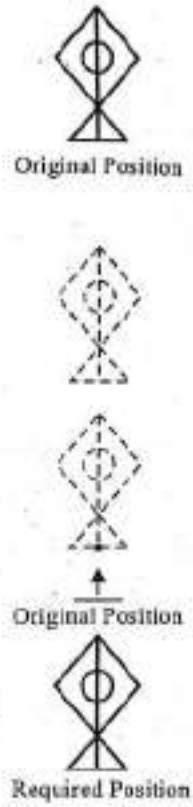

FIG. 14.29

21. Undo

One should note that AutoCAD has two undo commands which are quite different in operation from each other. (i) Undo button operated from standard toolbar or the u command deletes all the operations performed by the previous command (ii) The second undo command is obtained by typing `undo` at the command prompt has many options such as auto, control, begin, end, mark, back. Using this command one can begin or end editing session, delete or undo previous commands as per requirement using any option specified earlier in the undo command.

Example

Sequence of commands used to construct the *figure 14.30.*

FIG. 14.30

1. Command : Line
2. Command : Offset
3. Command : Circle
4. Command : Dim

Now we will modify this *figure 14.30* using the undo command and the u command.

Scanned by CamScanner

Case 1 *Refer figure 14.31.*

```
command : Undo ↵

Enter the number of
operations to undo or
[Auto / Control / BEgin /
End / Mark / Back]          : 1↵
OR
Enter the number of
operations to undo or
[Auto / Contol / BEgin /
End / Mark / Back]          : 2↵
OR
Enter the number of
operations to undo or
[Auto / Contol / BEgin /
End / Mark / Back]          : 3↵
```

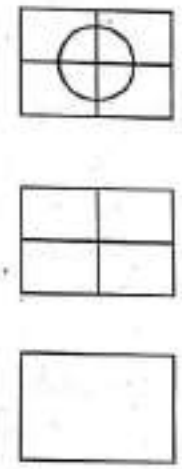

FIG. 14.31

Case 2 *Refer figure 14.32.*

```
Command          : U ↵
Menu             : Edit > Undo
Standard Toolbar : [↶] Undo
DIM

Command : U ↵
CIRCLE

Command : U ↵
OFFSET

Command : U ↵
Everything has been undone
```

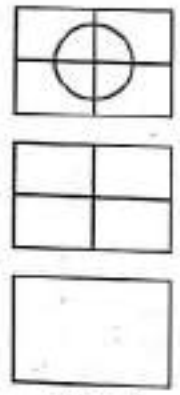

FIG. 14.32

22. Redo

Redo must immediately follow the undo or u command because redo stores only the previous immediate undo i.e one redo per command. Say for example if a series of four undo's are entered only the last undo can be restored. One can also say that redo is a command to undo your undo.

```
Command          : Redo ↵
Menu             : Edit > Redo
Standard Toolbar : [↷] Redo
```

Scanned by CamScanner

23. Chamfer

This command is used to join two non parallel lines with an intermediate line technically called as chamfer.

An example is shown where this command is used to modify the given *figure 14.33.*

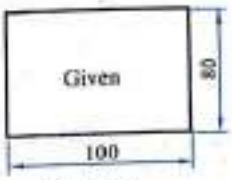

FIG. 14.33

Example : *Refer figure 14.34.*

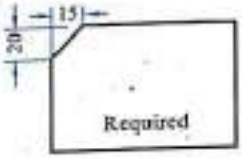

Command : **Chamfer (Cha)** ↵

Menu : **Modify > Chamfer**

Draw Toolbar : **Chamfer**

(TRIM mode) Current Chamfer

Dist1 = 10.0000,

Dist2 = 10.0000 : *(Distance given by default)*

Select first line or [Polyline/Distance/Angle/Trim / Method] : **D**↵

Specify first chamfer distance : **10**↵

Specify second chamfer distance : **20** ↵

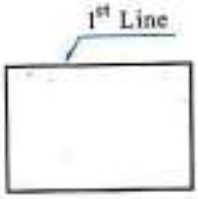

Command : **Cha** ↵

(Trim mode) Current Chamfer

Dist1 = 14.0000,

Dist2 = 20.0000 : *(Distance as per requirement i.e. 15 and 20)*

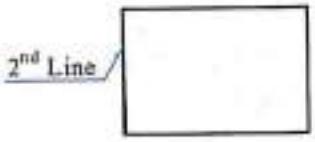

Select first line [Polyline /Distance / Angle / Trim /Method] : *(Select object line in view)*

Select second line : *(Select object line in view)*

FIG. 14.34

Conclusion : *Generally the default value of chamfer is displayed as 10,10. One should change the default value as per the requirement and repeat the chamfer command.*

Scanned by CamScanner

24. Fillet

This command uses an intermediate arc of specified radius to connect two non parallel lines.

Example : *Refer figure 14.35.*

Command : **Fillet** ↵

Menu : **Modify ➤ Fillet**

Modify Toolbar : **Fillet**

Current Settings : **Mode = Trim, Radius = 10.000.**

Select first object or [Polyline/Radius/Trim] : r ↵

Specify fillet radius <10.0000> : 20↵ *(Value 10.0000 is by default).*

An example is shown where this command is used to modify the given *figure 14.35.*

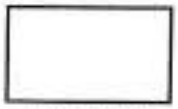

FIG. 14.35

Command : **Fillet** ↵

Current Settings : Mode= TRIM, Radius = 20.000 : *(Radius as per requirement)*

Select first object or [Polyline/Radius/Trim] : *(Select in view)*↵

Select second object : *(Select in view)*↵

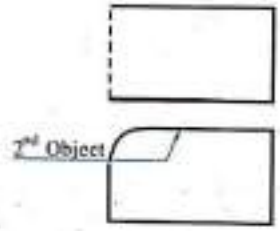

25. Dimension

In AutoCAD drawing five types of dimensions are possible viz. linear, angular, radial, diametric and ordinate.

(i) Linear Dimensions : This facilitates horizontal, vertical, aligned and rotated dimensions.

(ii) Angular Dimensions : This facilitates angular dimensioning of object.

(iii) Radial Dimensions : This facilitates radial dimensioning of circle and arc.

(iv) Diametrical Dimensions : This facilitates diametrical dimensioning of circle.

(v) Ordinate Dimensions : This facilitates the use of X and Y coordinates.

Scanned by CamScanner

Example

Consider an object as shown in *figure 14.36*. Let us use the dimension command to set the dimensions as shown.

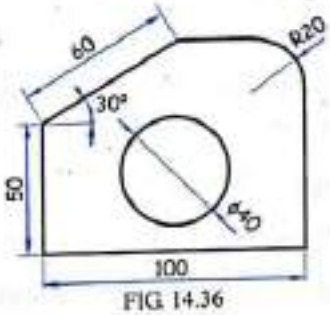

FIG 14.36

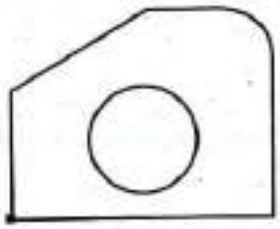

Command : **Dim** ↵
Dim : **hor** ↵
Specify first extension line origin or < select object > : *(Select object line in view)*

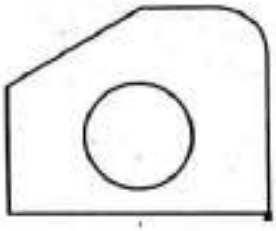

Specify second extension line origin : *(Select object line in view)*

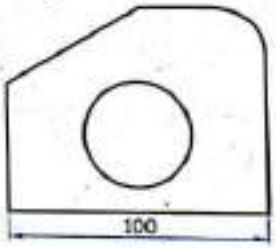

Specify dimension line location or [Mtext/ Text/ Angle] : *(Select in view)*

Enter dimension text : **100** ↵

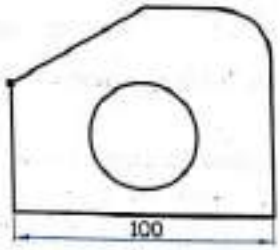

Dim : **Ver** ↵
Specify first extension line origin or < select object > : *(Select object line in view)*

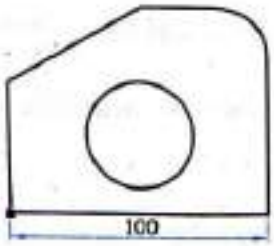

Specify second extension line origin : *(Select object line in view)*

Scanned by CamScanner

Specify dimension line location or [Mtext/ Text/ Angle] : *(Select in view)*

Enter dimension text : **50** ↵
Dim : **aligned** ↵

Specify first extension line origin or < select object > : *(Select object line in view)*

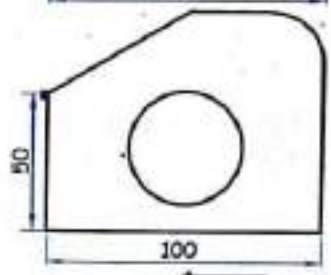

Specify second extension line origin : *(Select object line in view)*

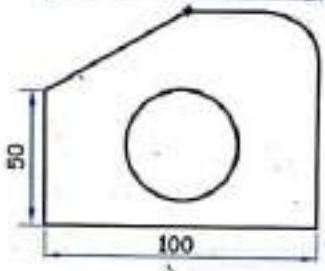

Specify dimension line location or [Mtext/ Text/ Angle] : *(Select in view)*

Enter dimension text : **60** ↵

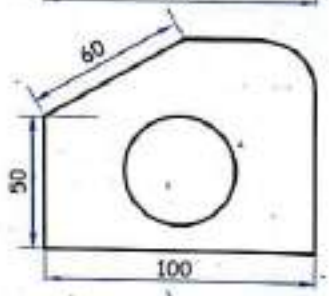

Dim : **dia** ↵
Select arc or circle : *(Select in view)*
Enter dimension text : **40** ↵

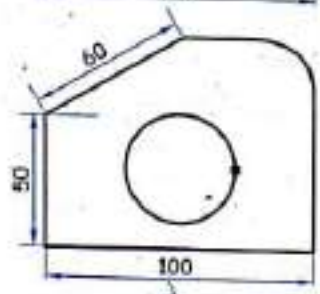

Specify dimension line location or [Mtext/ Text/ Angle] : *(Select in view)*

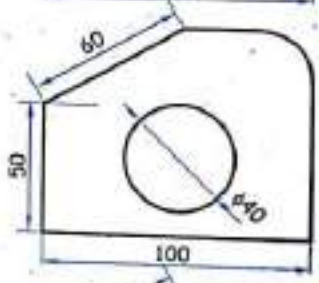

Dim : **ang** ↵
Select arc, circle, line or < specify vertex > : *(Select in view)*

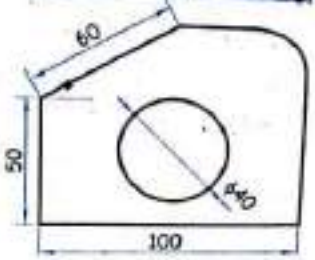

Scanned by CamScanner

Select second line : *(Select in view)*

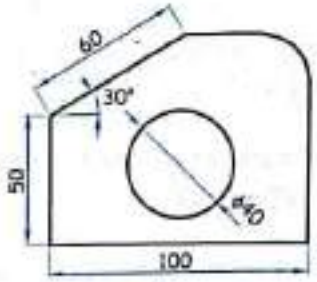

Specify dimension arc line location or [Mtext/ Text/ Angle] : *(Select in view)*
Enter dimension text <30> : ↵
Enter text location (or press ENTER): ↵

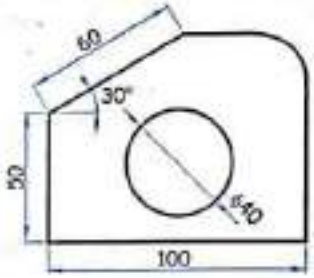

Dim : **rad** ↵
Select arc or circle : *(Select in view)*
Enter dimension text <20> : ↵
Specify dimension line location or [Mtext/ Text/ Angle] : *(Select in view)*

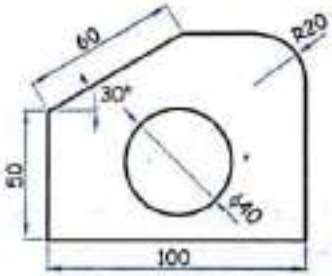

26. BHatch

This command opens a dialog box with hatching options which helps to enclose boundary defined by lines, circles, and polylines. *Refer figure 14.37.*

Command : **Bhatch** ↵

(On screen, boundary hatch dialog box will be displaced. Change the pattern settings to ANSI 31. Then select the pick points option.)

Select internal point. : *(Select the area to be hatched, in view)*
Select internal point : ↵

(Once again screen of boundary hatch dialog box will be displayed. Click OK. The selected area will be hatched.)

FIG. 14.37

27. **Zoom** : It is used to display the drawing either in enlarged form or in reduction form as required without affecting the actual size.

28. **Scale** : This command is used to vary the scale of the existing file in use. The scale can be changed as per our requirement.

29. **Pedit** : If any figure is formed by several object lines and is required to be treated as polyline, pedit command is convenient to use because it converts the several object lines into a polyline.

Scanned by CamScanner

30. **Pline** : This is used if any figure is to be formed by various object lines such as straight, arc, lines with various width and thickness etc. (i.e. unlike standard lines.)

    These can be drawn using a single pline command and figure formed will be considered as a single polyline object.

31. **Explode** : It is a complementary command to pedit and is used to reduce a block, polyline to treat as an individual component object.

32. **Grid** : This command sets the grid spacing and is usually represented in form of dots equally spaced. One can adjust the grid spacing as per the requirement. It can also be turned ON/OFF. Grid is only a visual reference for drawing.

33. **Divide** : This command marks an object into equal divisions when the number of division is specified.

34. **Dist** : This command helps to measure distance between two points and angle in the current X-Y plane.

35. **Block** : This command helps to group a set of drawing objects together and treats as a single object. One can insert, move, copy, rotate, mirror or save the block as an external file.

36. **Insert** : This command is used to insert a predefined block into the drawing. A single block can be inserted in various drawings.

37. **Help** : This command is used to obtain the list of commands of AutoCAD in case if we have forgotten the command or to get information about an unknown command. This can also be entered as (?).

38. **Save** : This command is used to save periodical changes in the drawing without ending or exiting the AutoCAD drawing editor. This is useful in protecting the drawing from power failures or errors or any other mistakes.

39. **End** : This command is used to shut down the AutoCAD drawing editor and it prompts whether we have to save the changes made to the current drawing. This helps in returning to main menu.

40. **Quit** : This command is similar to end command with the exception that in end it prompts us to save the current drawing or not, while in quit command it returns to main menu without asking to save and on return to AutoCAD the drawing will not be updated, as we left without saving.

System of Coordinates

- With respect to the Autocad a point can be specified on the workspace either with the help of a pointing device (mouse) or by entering the coordinates of the point in the command screen window.
- There is a predefined cartesian system called the *world coordinate system* (WCS) in Autocad. Since it is a 3D modelling package hence it comprises of three axes x, y and z which help to locate the point on the workspace.

  x-axis is positive towards right.

  y-axis is positive upwards and

  z-axis is positive outwards from the screen towards the user.
- The WCS icon is always shown at the lower left corner of the work space.
- Also there is a provision in Autocad for the user to create his own coordinate system called *user coordinate system* (UCS). In UCS the origin can be shifted to any point or the UCS can be rotated moved in any direction.

Scanned by CamScanner

Snap

Command : **Snap** ↵

With this command the user can control the movement of the crosshair in the workspace. There are various options in this command. There is an important snap mode called *object snap mode* using which the movement of the cursor can be configured to specific points such as end point, point of intersection, mid point, quarter of a circle, midpoints, etc. Also with this command the grid can be set for isometric construction.

Oops

Command : **Oops** ↵

This command restores the objects that were erased by the latest erase command.

Rotate

Command : **Rotate** ↵

With this command an object can be rotated about a specific point. The rotation angle and the reference point can be modified as per the requirement.

Divide

Command : **Divide** ↵

This command is helpful for dividing the length of circumference (perimeter) of an object into fixed number of parts.

Area

Command : **Area** ↵

Using this command we can calculate the area and perimeter of objects.

Dist

Command : **Dist** ↵

This command measures the distance and the angle between any two points on the workspace.

Stretch

Command : **Stretch** ↵

It is used to move or stretch any object including lines, arc or polyline objects.

Dimensioning

Dim : **Rotated** ↵

This command helps us to give dimension inclined at an angle to the object.

Dim : Rotated ↵

Dimension line angle <O> : **60**↵

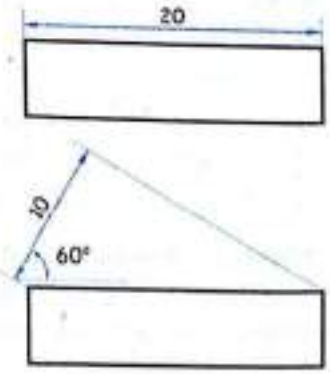

Scanned by CamScanner

Continue

```
Dim          : Continue ↵
Select extension line
origin / Enter to select      : (Select in view)

Enter dimension text          : 60↵
Select extension line origin
/ Enter to select             : ↵

Enter dimension text          : 25↵
Select extension line origin
/ Enter to select             : ↵

Enter dimension text          : 30↵
```

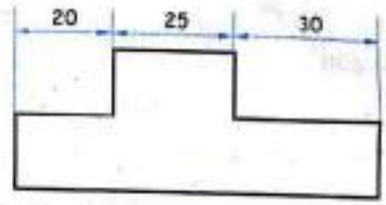

Similarly

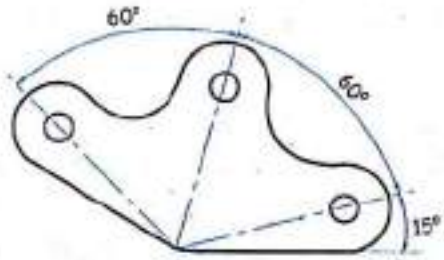

Baseline

```
Dim          : Baseline ↵
Select extension line
origin / Enter to select      : (Select in view)

Select base dimension         : (Select in view)

Select extension line origin
/ Enter to select             : (Select in view)

Enter dimension text          : 30↵
```

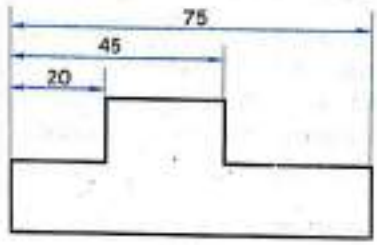

Similarly

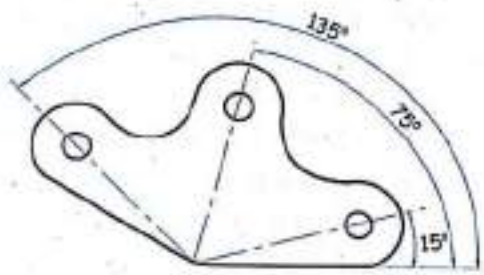

Editing Command for Dimensions

Newtext Command

Used to change dimension text.

```
Dim          : Newtext ↵
Enter new dimension text      : 20↵
Select object                 : (Select in view)
```

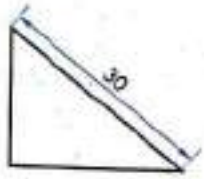

Original

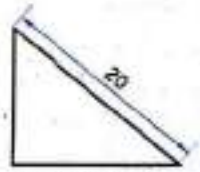

After Change

Scanned by CamScanner

TEDIT Command

It can be used to control the location and angle of dimension text.

```
Dim        : TEDIT ↵
Select dimension                    : (Select in view)
Enter text location (Left
/ Right / Home / Angle)             : Angle↵
Enter new text angle                : 30↵

Dim        : Exit ↵
```

This command is used to exit the dimension command.

Original

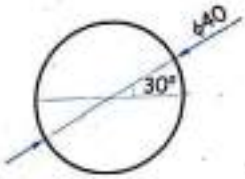

After Change

14.5 Solved Problems

Problem 1

Construct an isometric view of rectangular slab of size 100 × 100 mm and thick 30 mm with centrally a circular hole of diameter 60 mm using AutoCAD Software. Present the step by step construction with sequence of proper command.

Refer figure 14.38.

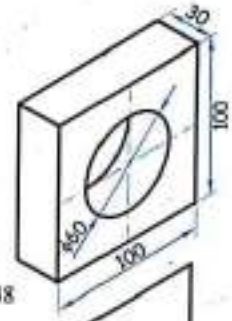

FIG 14.38

Solution

```
Command: L↵
LINE Specify first point : (Select a point on screen say P)
Specify next point or [Undo] : @ 100 < 30 ↵
Specify next point or [Undo] : @ 100 < 90 ↵
Specify next point or [Close/Undo] : @ 100 < 210 ↵
Specify next point or [Close/Undo] : C↵

Command : Copy
Select objects: (Select in view)
Select objects : ↵
Specify base point or displacement, or [Multiple]
: (Select in view)
Specify second point of displacement : @ 30 < 150 ↵

Command : L↵
LINE Specify first point : (Select in view)
Specify next point or [Undo] : (Select in view)
Specify next point or [Undo] : ↵

Command : L↵
LINE Specify first point : (Select in view)
Specify next point or [Undo] : (Select in view)
Specify next point or [Undo] : ↵
```

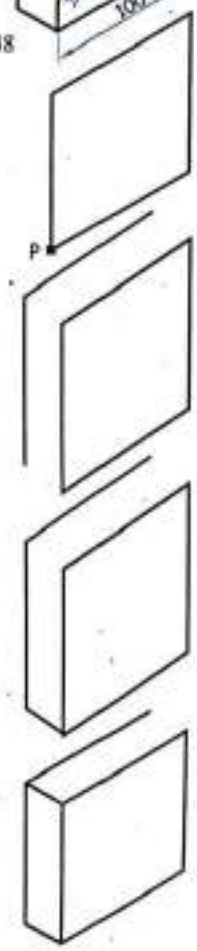

Scanned by CamScanner

Command : **L**↵
LINE Specify first point : *(Select in view)*
Specify next point or [Undo] : *(Select in view)*
Specify next point or [Undo] : ↵

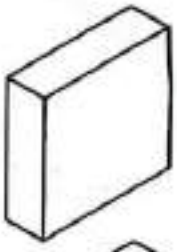

Command : **L**↵
LINE Specify first point : **mid** of *(Select in view)*
Specify next point or [Undo] : **mid** of *(Select in view)*
Specify next point or [Undo] : ↵

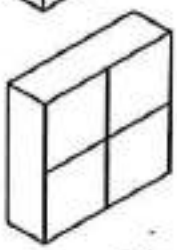

Command : **L**↵
LINE Specify first point : **mid** of *(Select in view)*
Specify next point or [Undo] : **mid** of *(Select in view)*
Specify next point or [Undo] : ↵

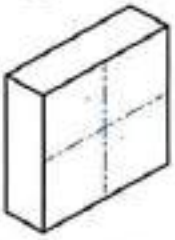

Command : **Chprop** ↵
Select objects : *(Select in view)*
Select objects : ↵
Enter property to change [Color/ LAyer/ LType/ ltScale/ LWeight/ Thickness] : **lt**↵
Enter new linetype name : **lentre**↵
Enter property to change [color/ LAyer/ LType/ ltScale/LWeight/ Thickness] : ↵

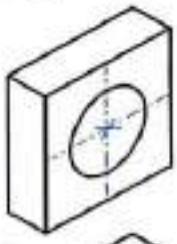

Command : **Ltscale** ↵
Enter new line type scale factor : **10**↵
Regenerating model

Note: While executing ellipse command grid snap and isometric snap must be ON in Menu → Tools → Drafting Settings.

Command : **Ellipse**
Specify axis endpoint of ellipse or [Arc/ Center/ Isocircle]: **i**↵
Specify center of isocircle : *(Select in view)*
Specify radius of isocircle or [Diameter] : **30**↵

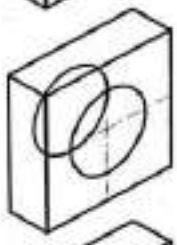

Command: **Copy**
Select objects: *(Select in view)*
Select objects: ↵
Specify base point of displacement or [Multiple] : *(Select in view)*
Specify second point of displacement : **@ 30 < 150** ↵

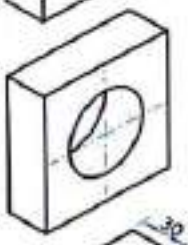

Command: **Trim**↵
Select cutting edges ..
Select objects: *(Select the square in view)*
Select objects : ↵
Select object to trim or [Project/ Edgo/ Undo] : *(Select parts of rarer ellipse to be trimmed in view)*
Select object to trim or [Project/Edgo/Undo] : ↵

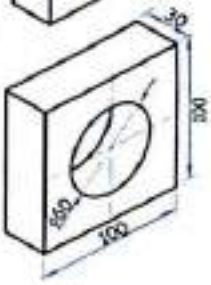

Command: **Dim** ↵ *(Hor, ver and dia)*

Scanned by CamScanner

Problem 2

Draw the F.V. and the T.V. of a cone with base diameter 40 mm and slant height 60 mm. Also show the development of lateral surface.

Solution

Refer figure 14.39.

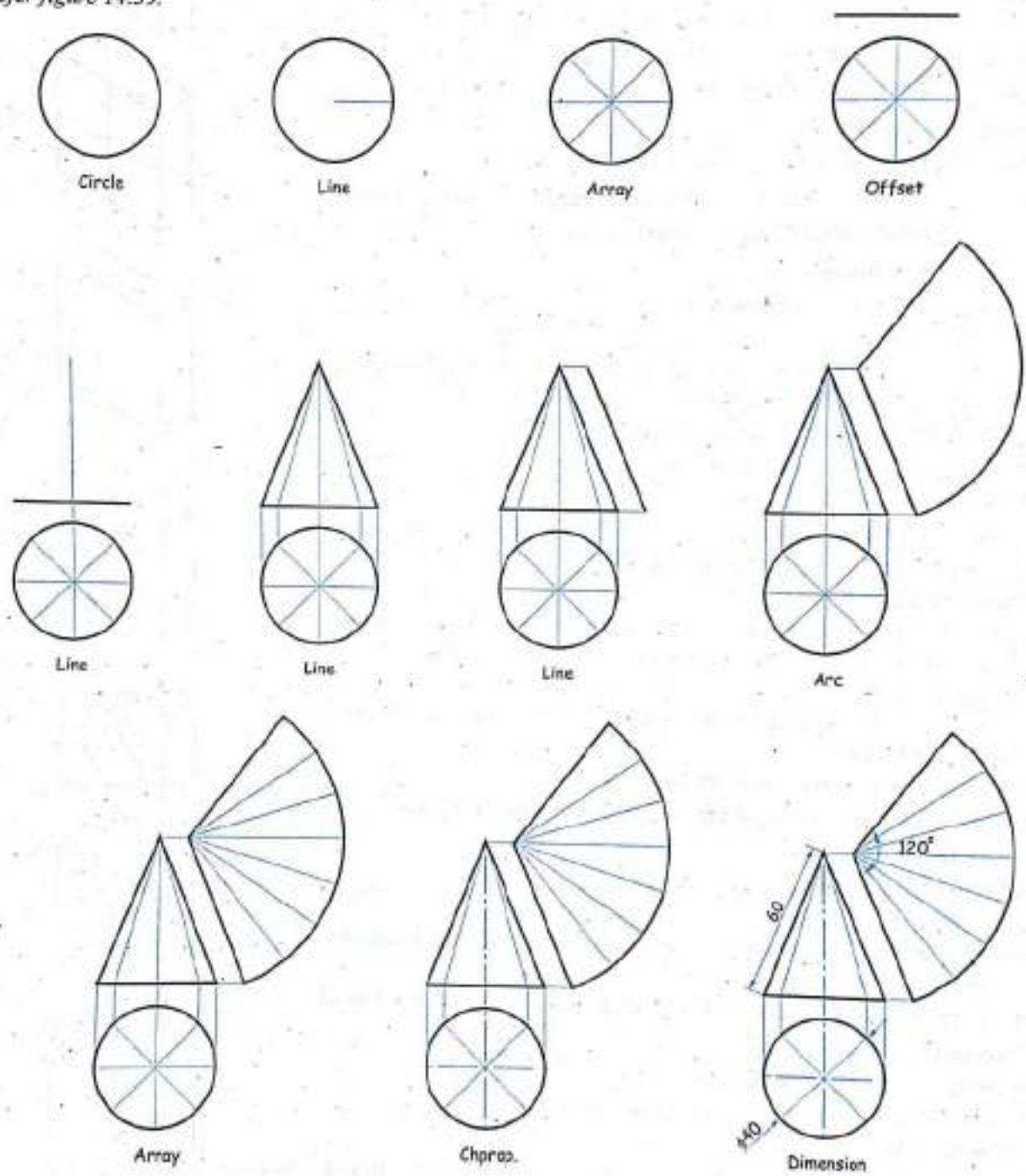

FIG. 14.39

Scanned by CamScanner

Problem 3

Draw the F.V. and the T.V. of square pyramid with edge of base 40 mm, axis height 60 mm such that the edges of base are equally inclined to V.P. Also show the development of lateral surface.

Solution

Refer figure 14.40.

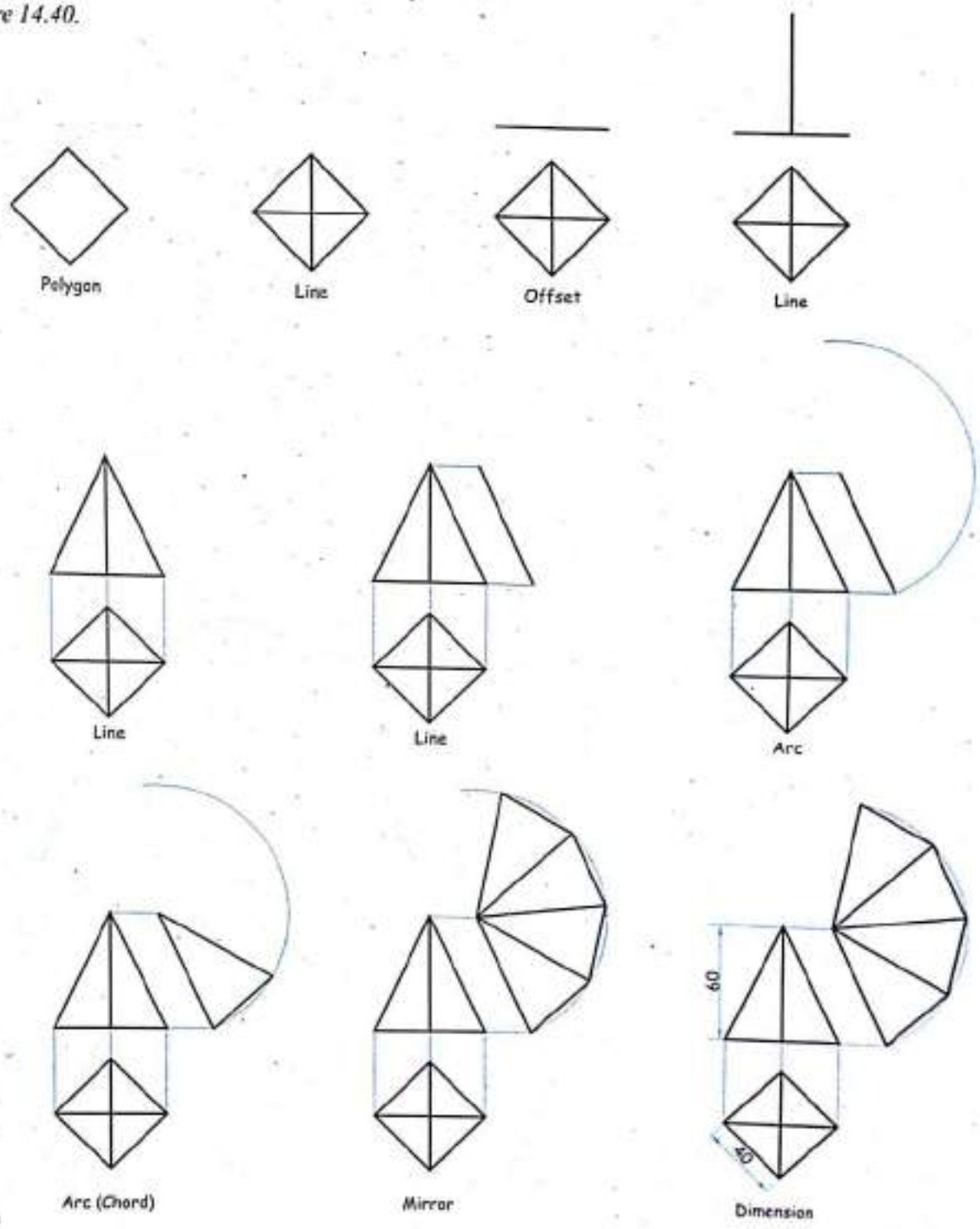

FIG. 14.40

Scanned by CamScanner

Problem 4

Draw a parabola having base 120 mm and height 80 mm by rectangle method.

Solution

Refer figure 14.41.

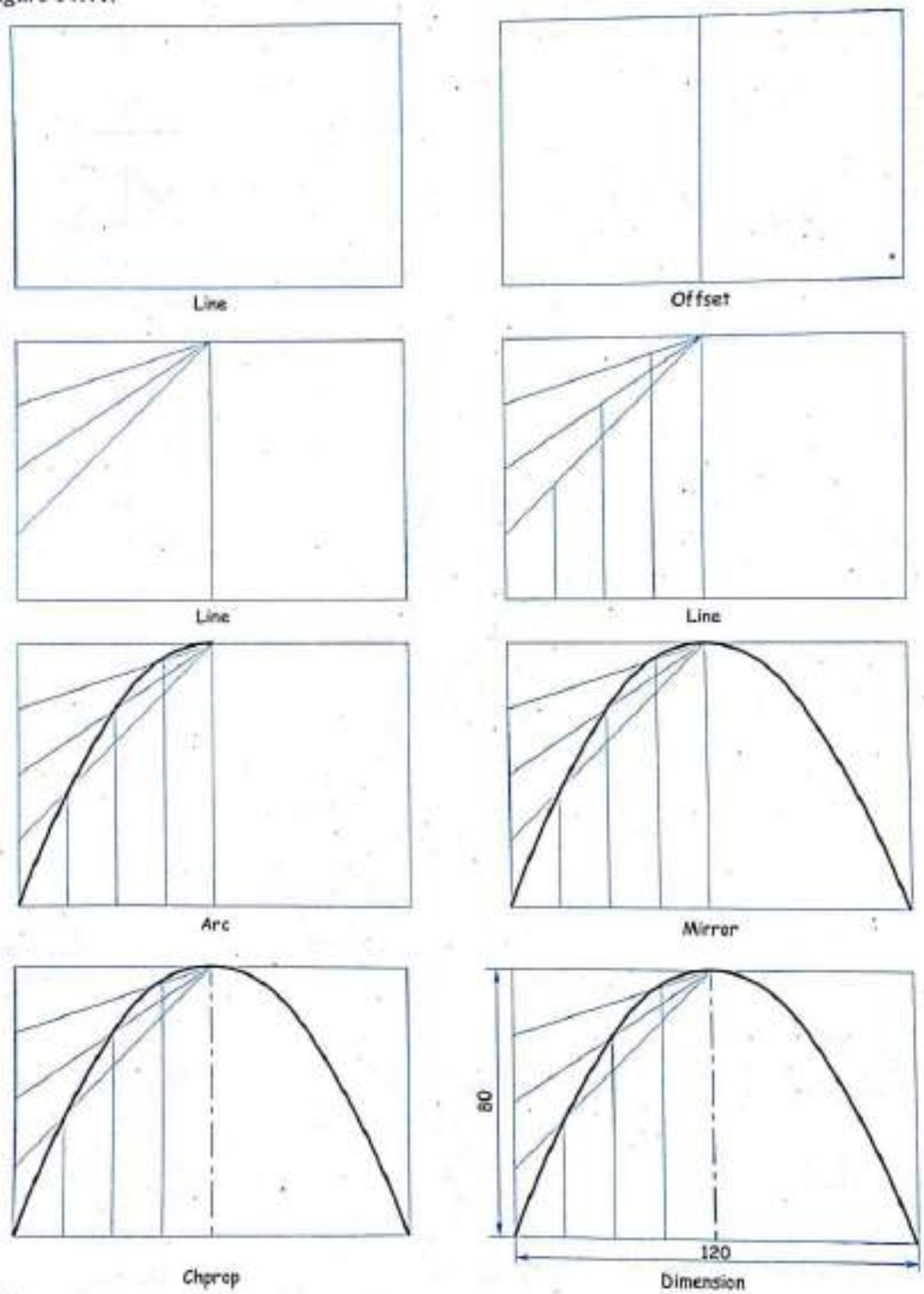

FIG. 14.41

Scanned by CamScanner

Appendix

A

Solutions to Selected Exercise

A.1 Solutions to Section 3.15 Exercise

1. *Refer figure A.1.*

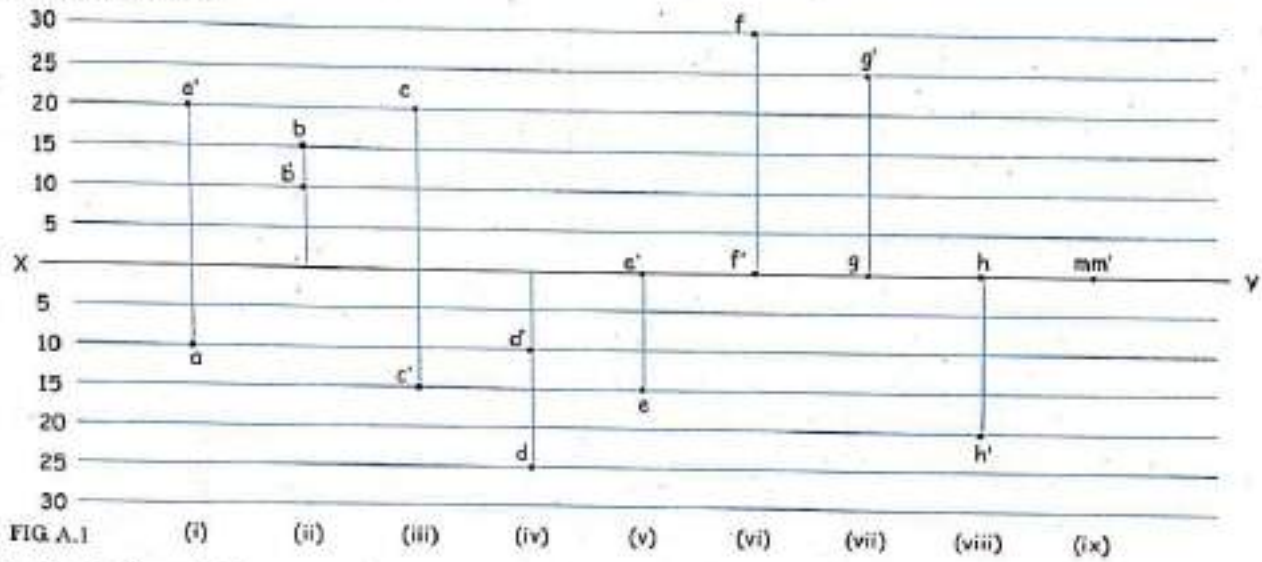

FIG. A.1

2. *Refer figure 3.16.*

   (i) Point *A* is 15 mm above the H.P. and 25 mm in front of the V.P.
   (ii) Point *B* is 20 mm below the H.P. and 25 mm behind the V.P.
   (iii) Point *C* is 20 mm above the H.P. and 5 mm behind the V.P.
   (iv) Point *D* is 30 mm below the H.P. and 10 mm in front of the V.P.
   (v) Point *E* is 15 mm below of the H.P. and on the V.P.
   (vi) Point *F* is on the H.P. and 30 mm behind the V.P.
   (vii) Point *G* is on the V.P. and 15 mm above the H.P.
   (viii) Point *H* is on/in the H.P. and 10 mm in front of the V.P.

3. Fill in the blanks.

   (i) third (ii) vertical (iii) second (iv) fourth (v) horizontal (vi) T.V.
   (vii) below the H.P. and in front of the V.P. (viii) below (ix) projector.

4. (i) 30 mm (ii) 50 mm (iii) A point *P* is 10 mm <u>below</u> the H.P. and 20 mm <u>behind</u> the V.P.
   (iv) True.

Scanned by CamScanner

A.2 Solutions to Section 9.6 Exercise III

Solution 1

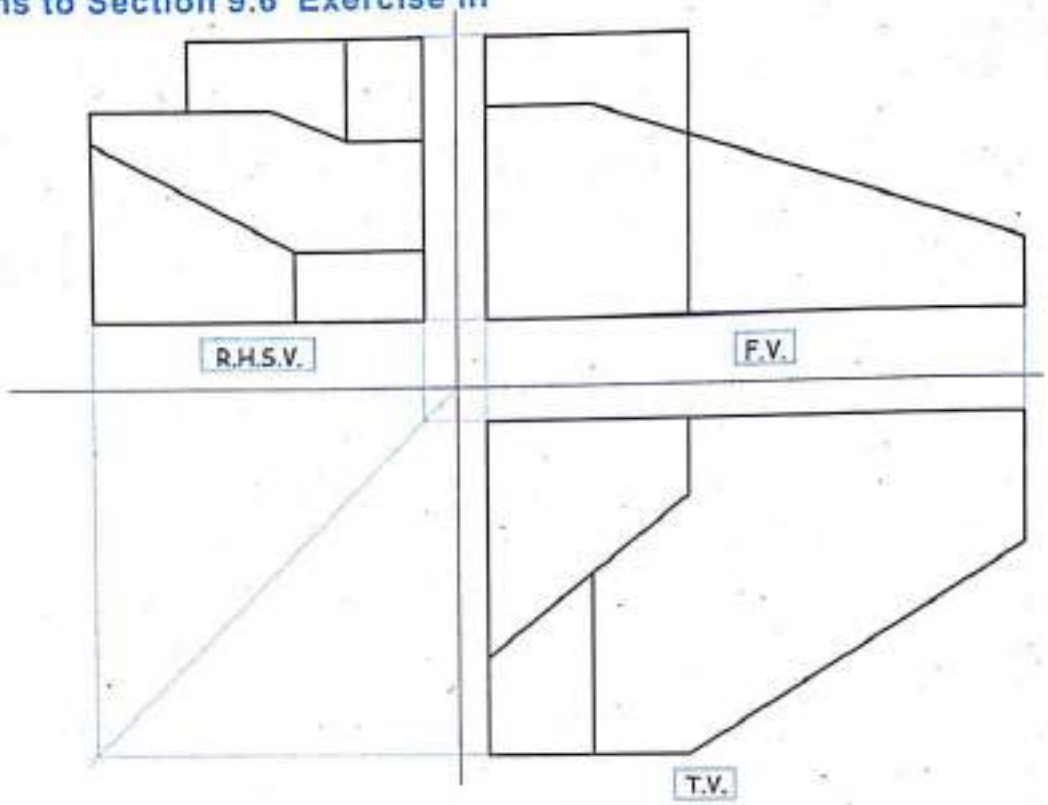

Solution 2

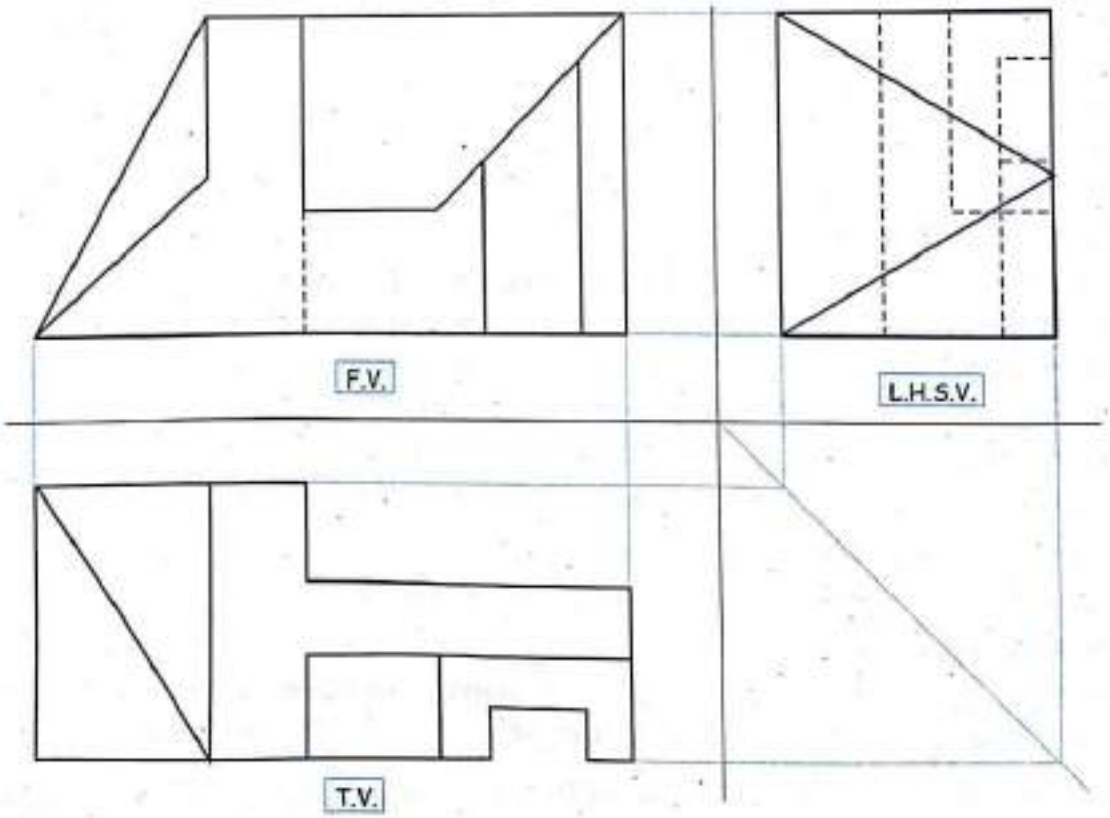

Scanned by CamScanner

Solution 3

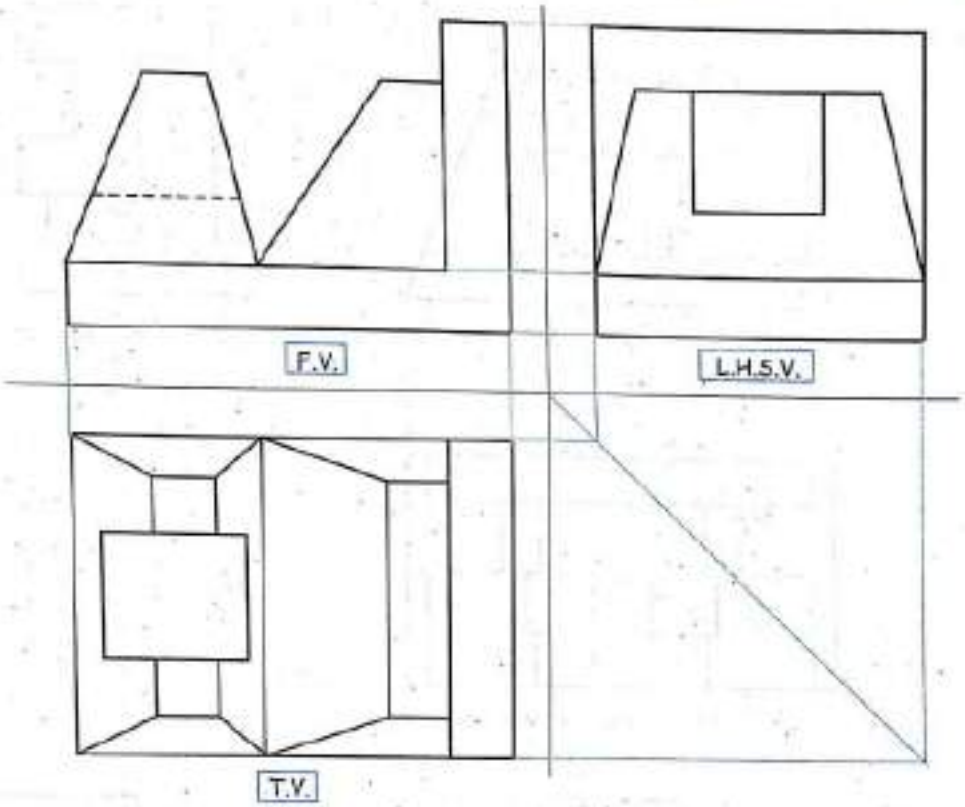

Solution 4

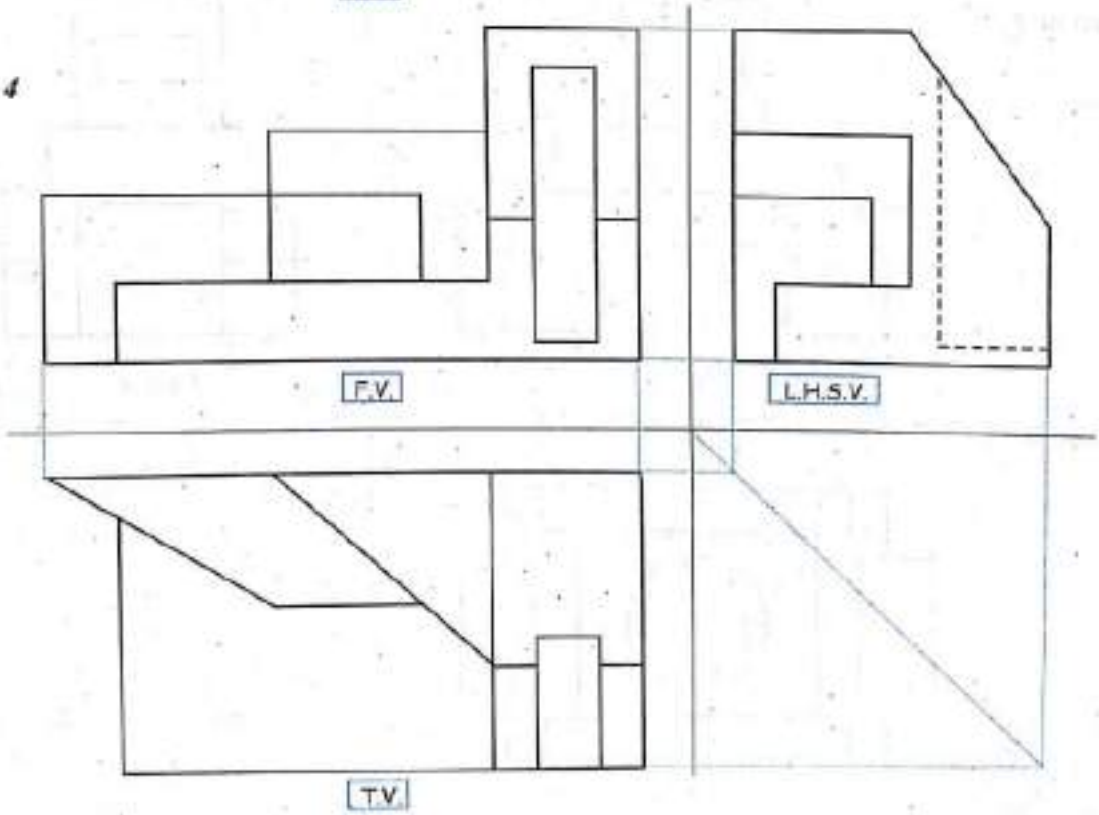

Scanned by CamScanner

Solution 5

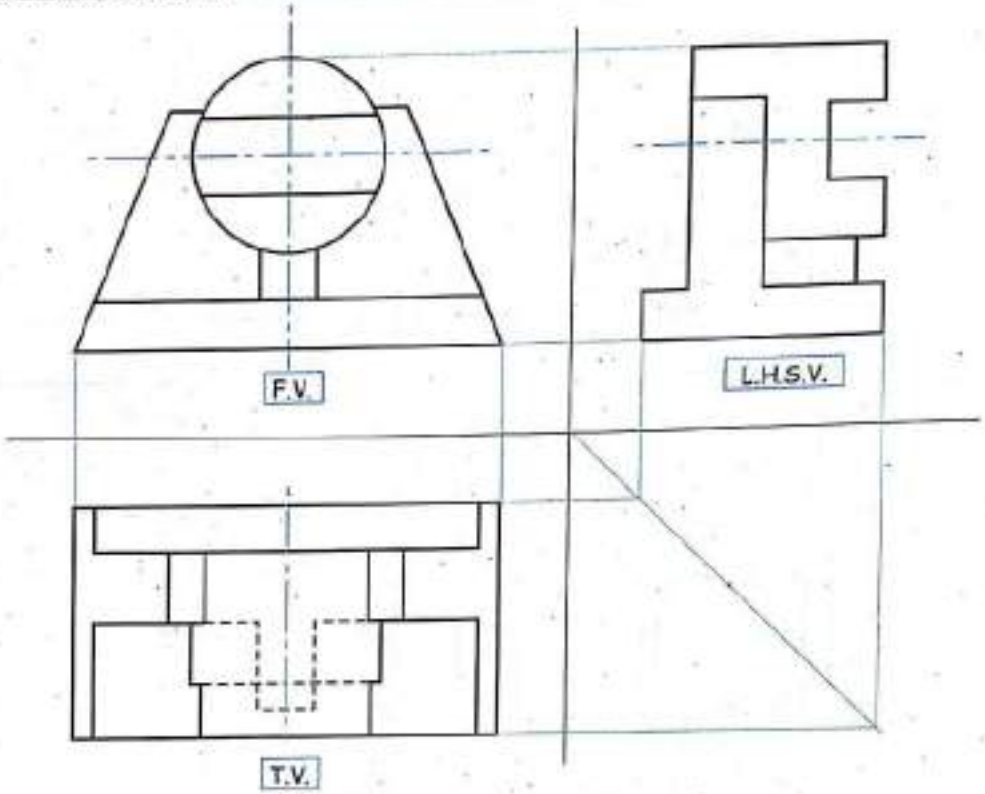

Solution 6

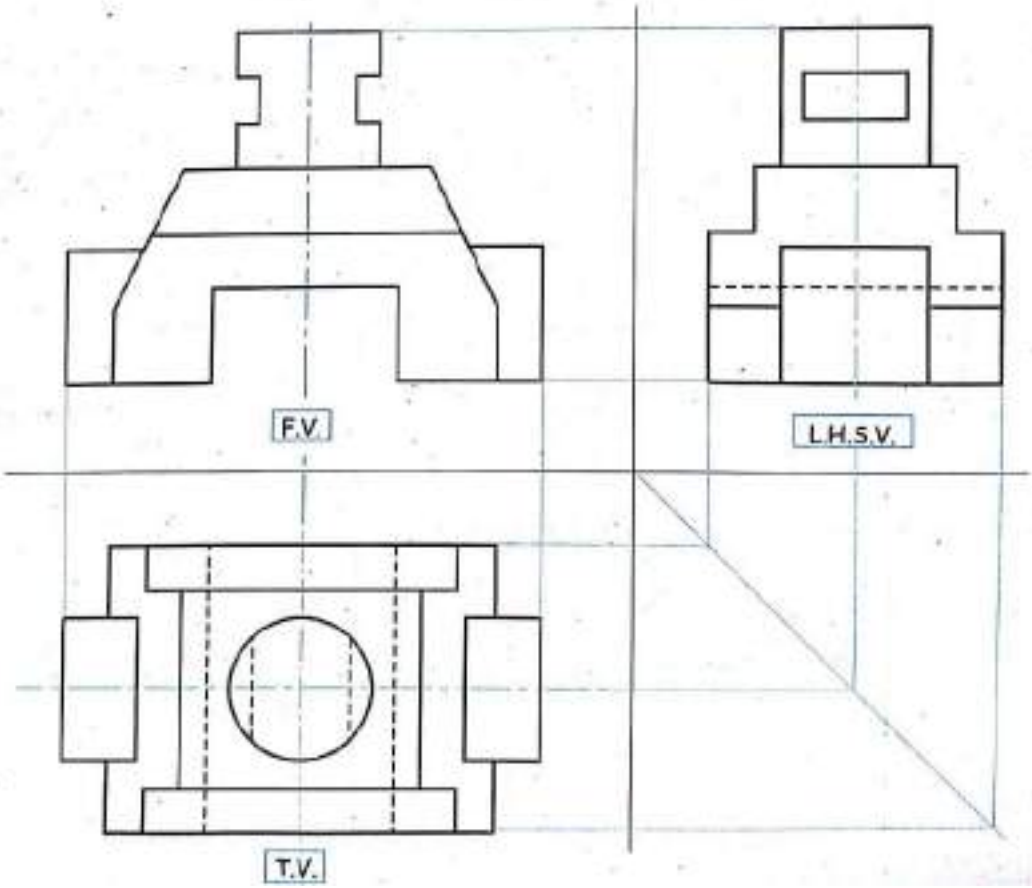

Scanned by CamScanner

Solution 7

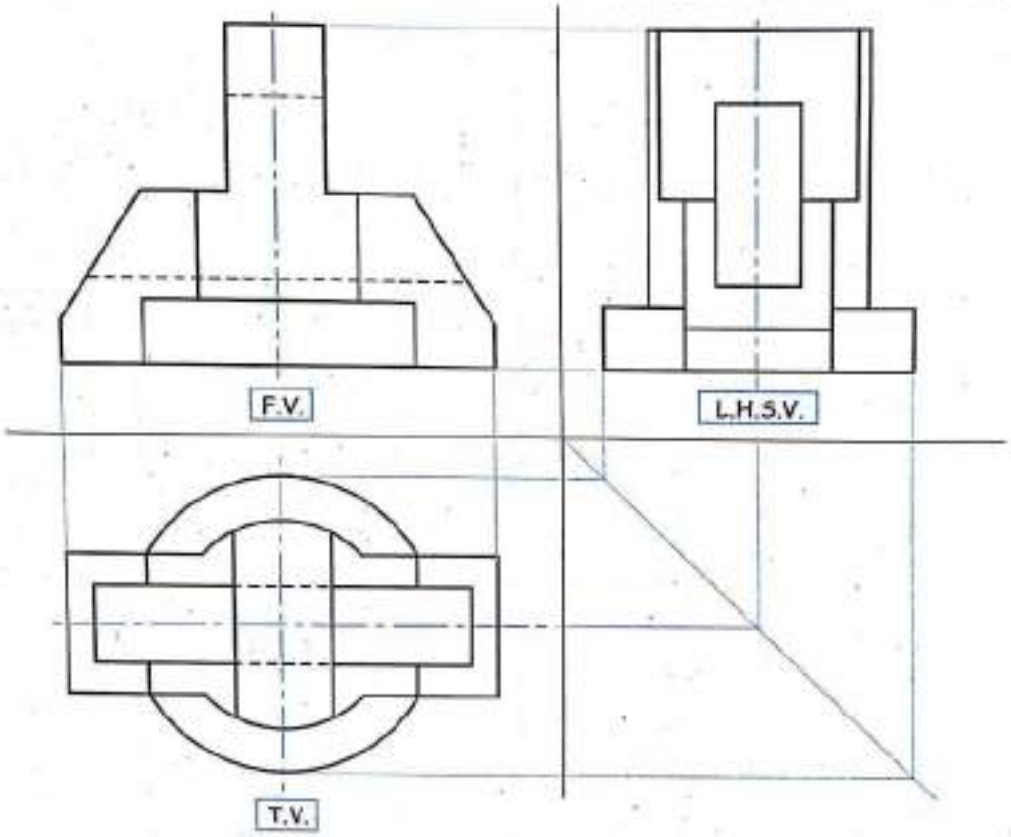

Solution 8

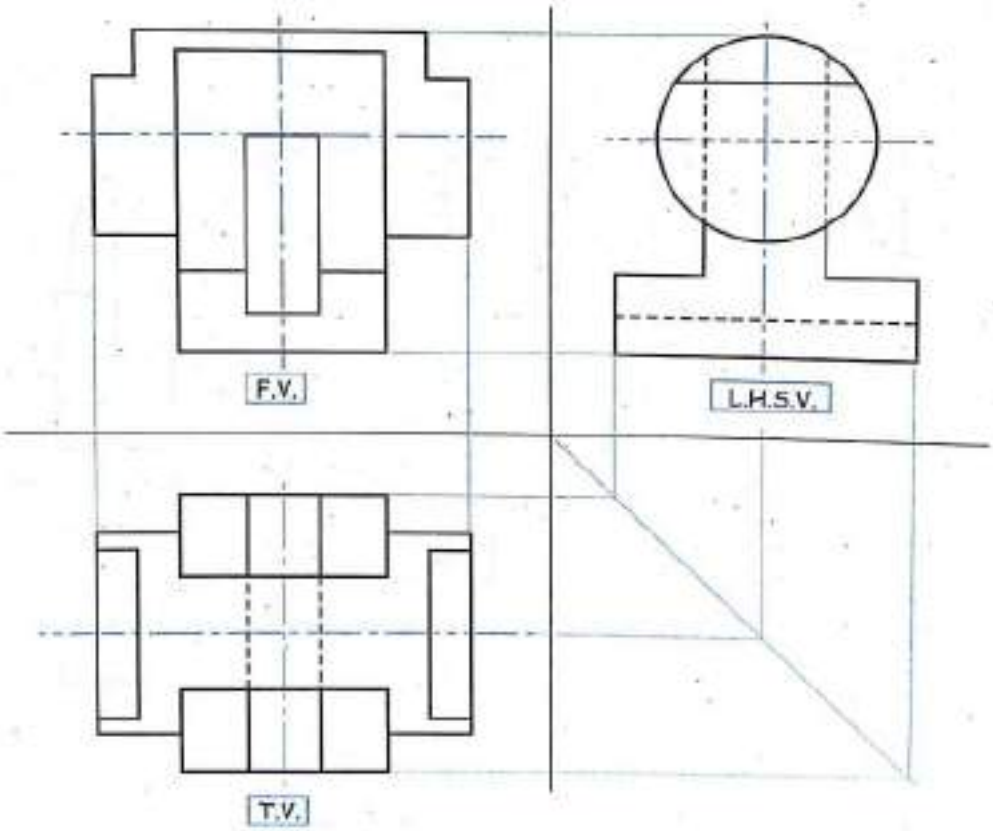

Scanned by CamScanner

A.3 Solutions to Section 9.7 Exercise IV

Solution 1

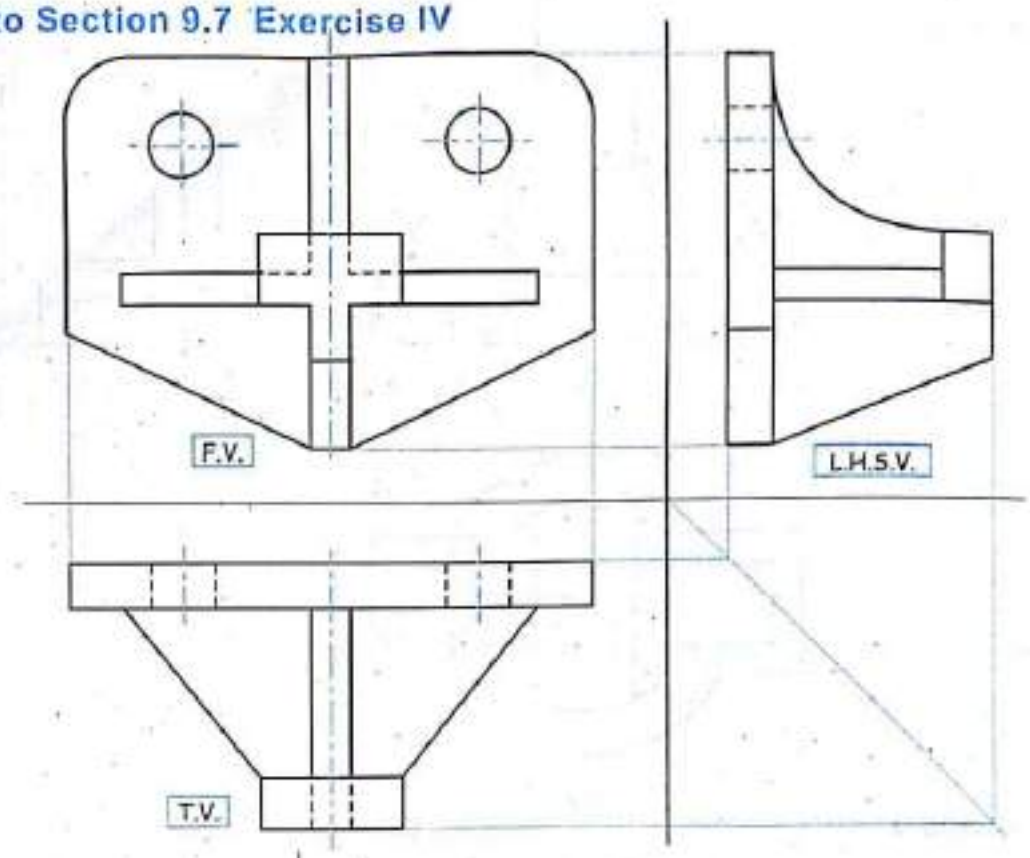

Solution 2

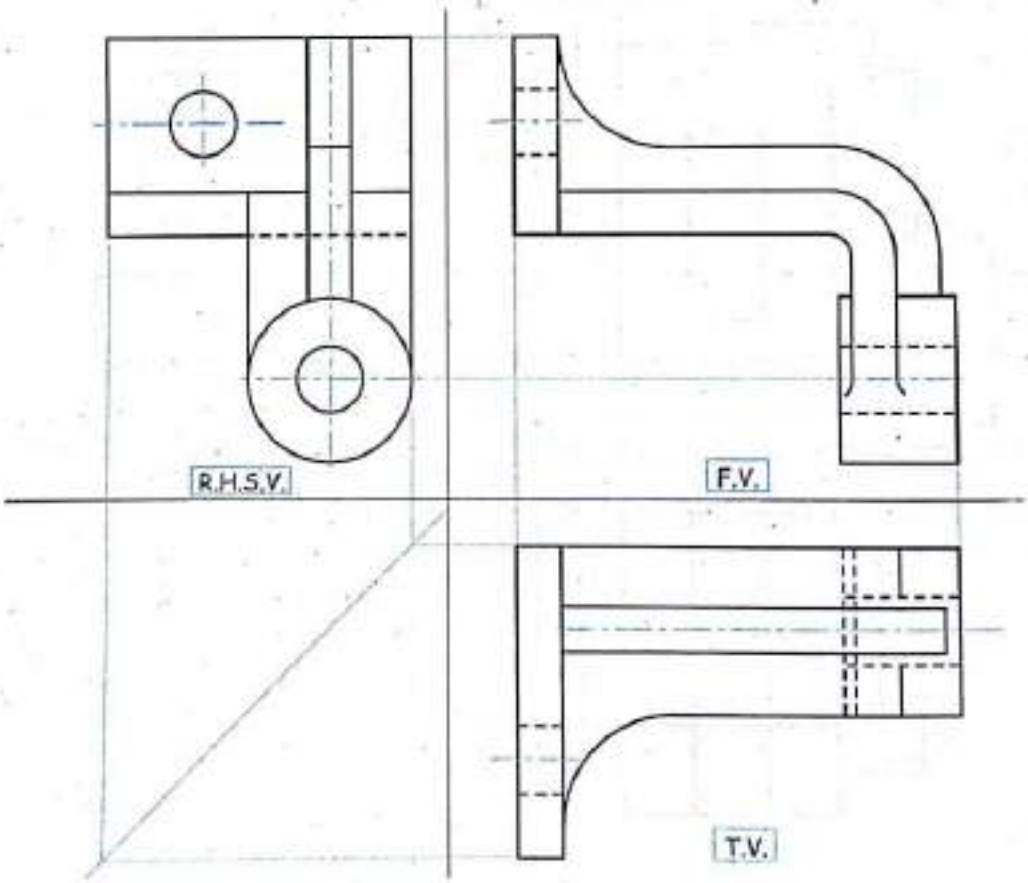

Scanned by CamScanner

Solution 3

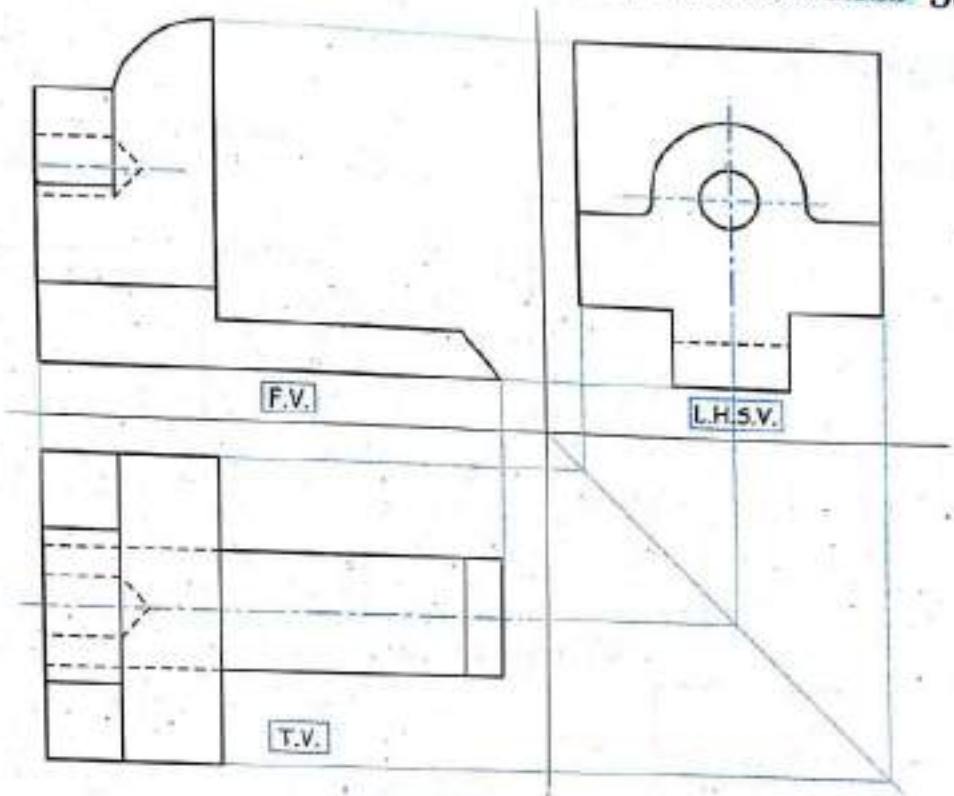

Solution 4

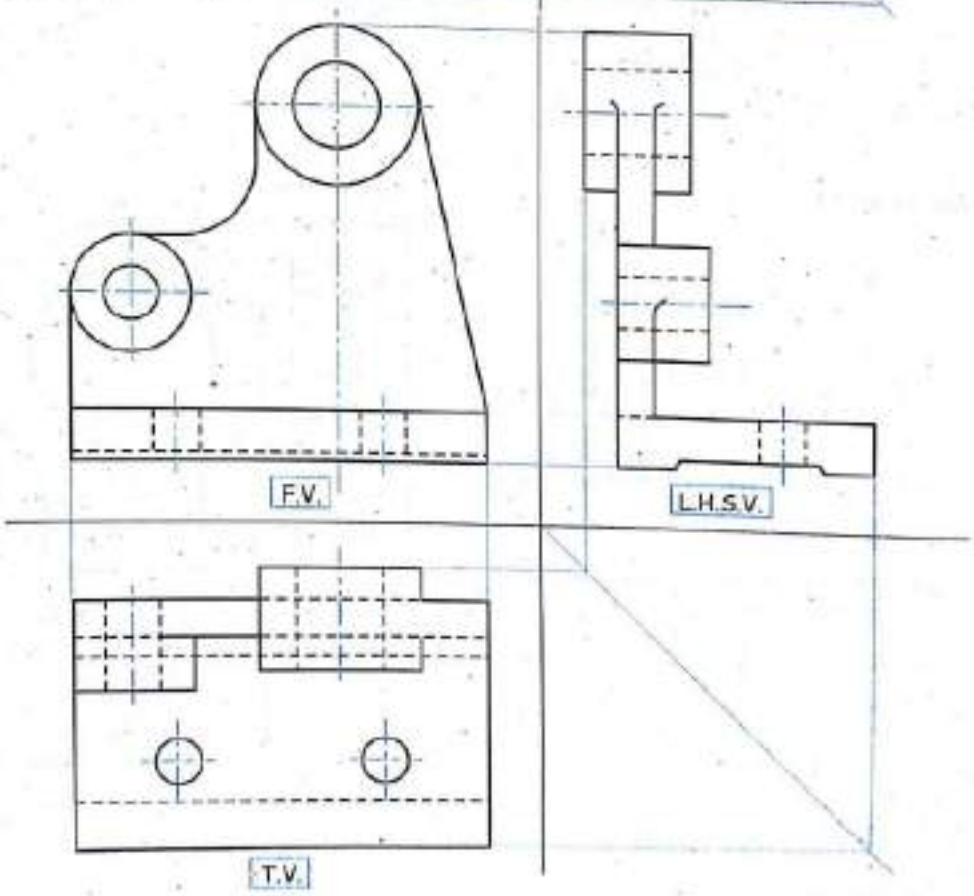

Scanned by CamScanner

A.4 Solutions to Section 10.5 Exercise

Solution 1

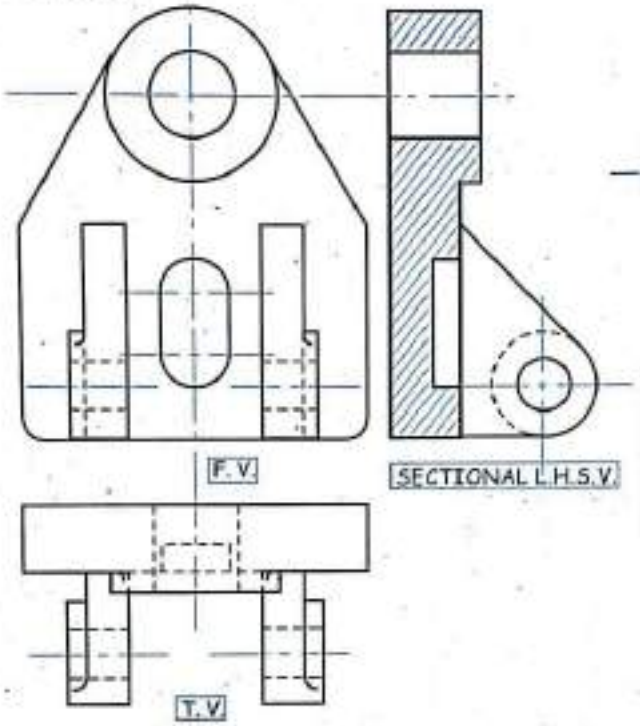

Solution 2

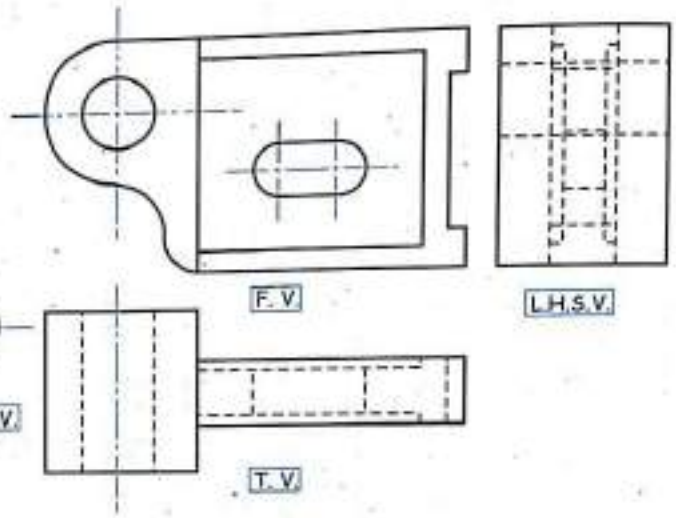

Solution 3

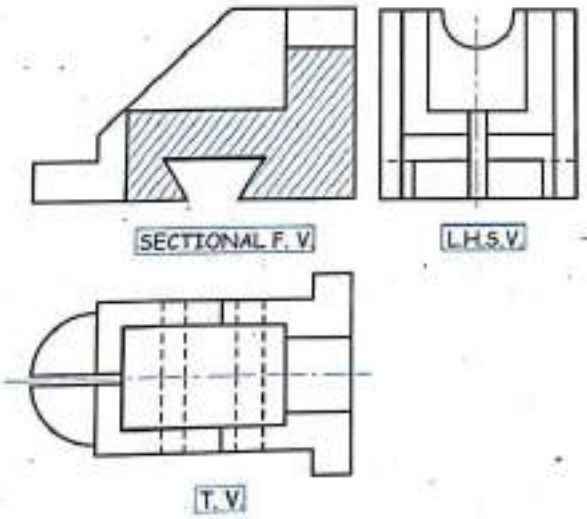

Solution 4

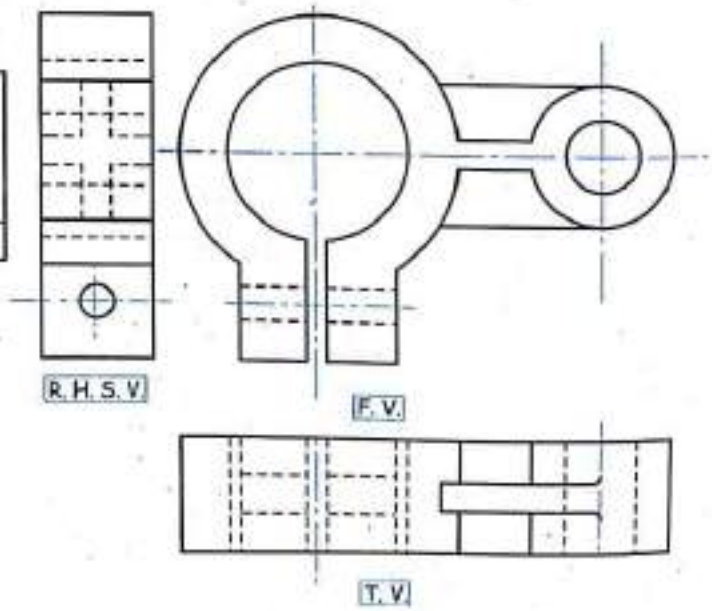

Scanned by CamScanner

Solution 5

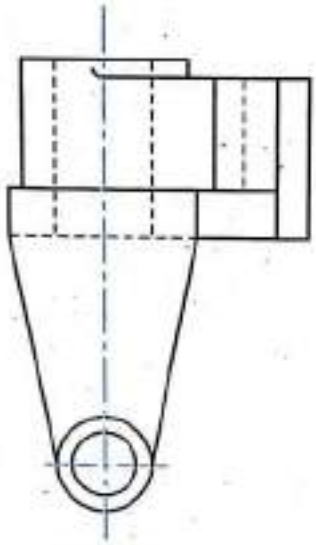

R. H. S. V.

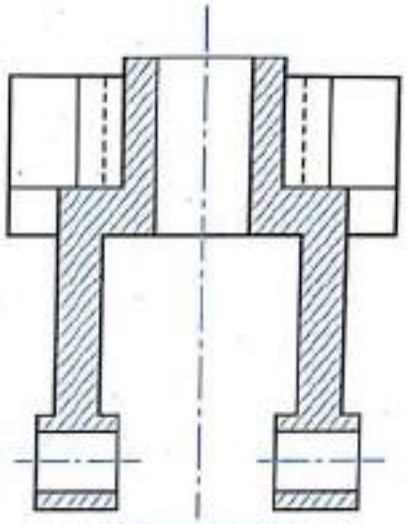

SECTIONAL F. V.

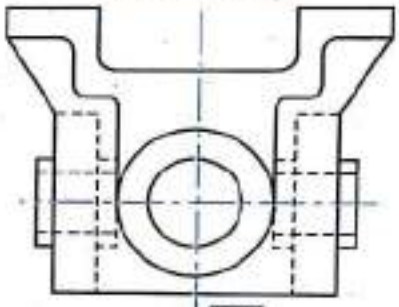

T. V.

Solution 6

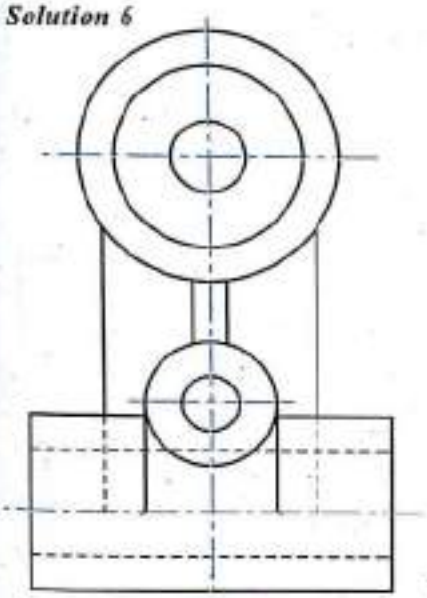

F. V.

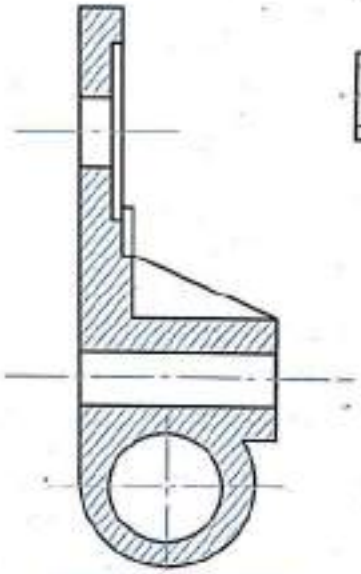

SECTIONAL L.H.S.V.

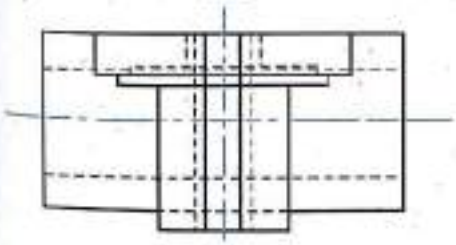

T. V.

Scanned by CamScanner

Solution 7

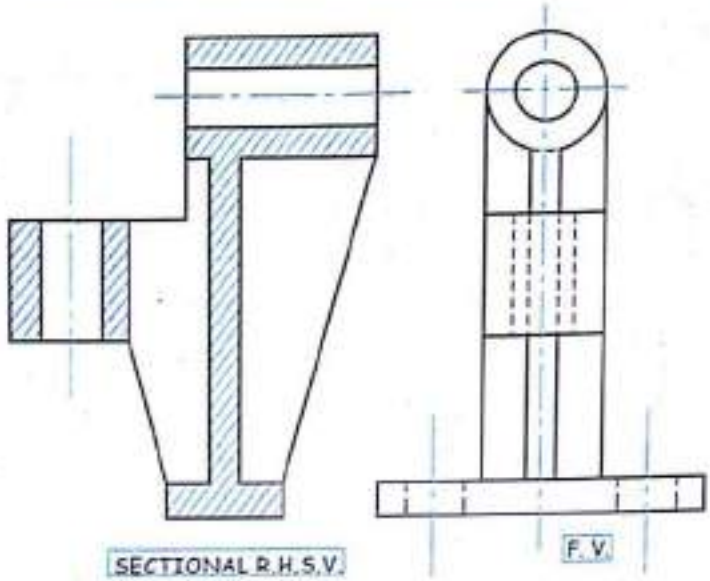

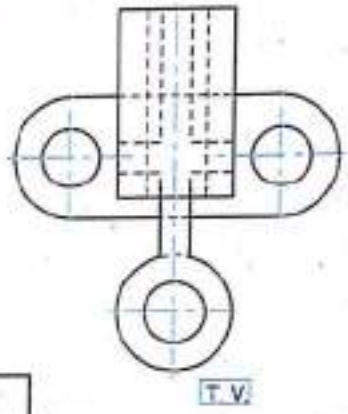

Solution 8

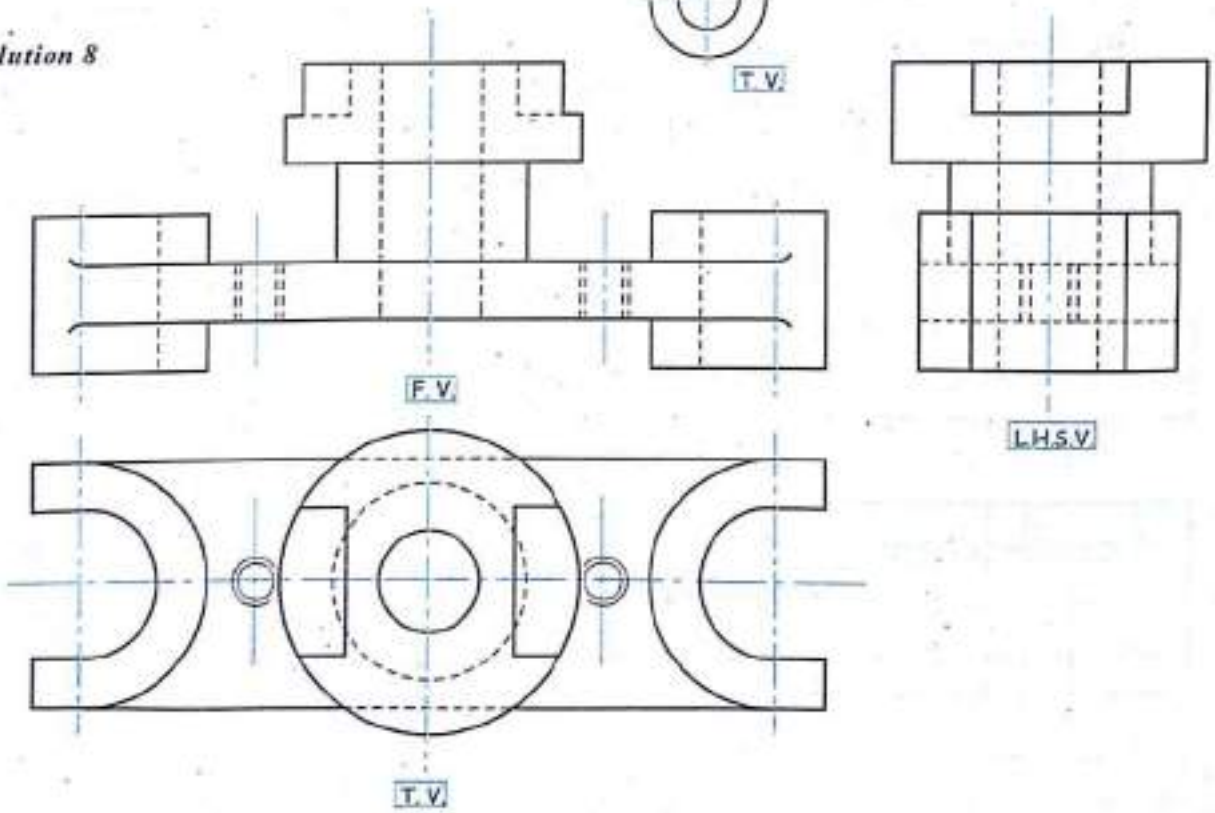

Scanned by CamScanner

Solution 9

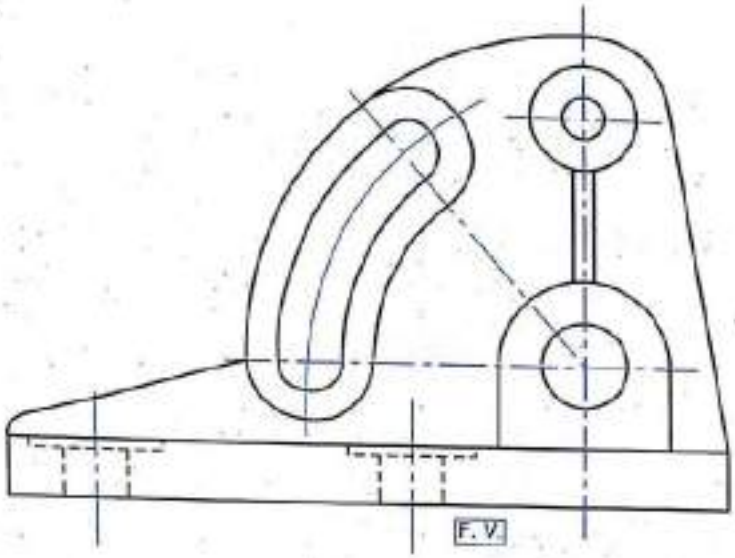

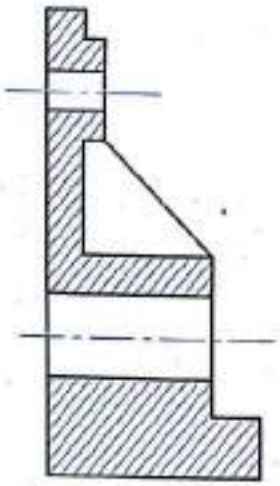

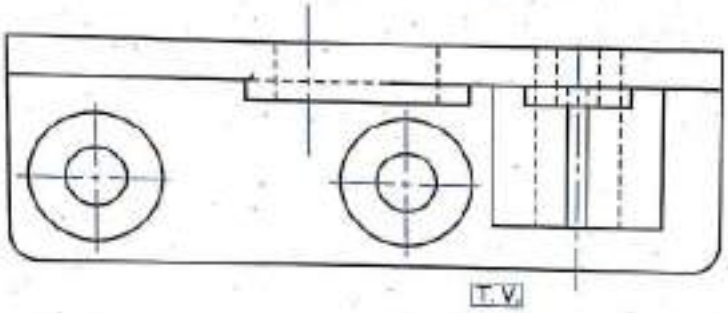

Solution 10

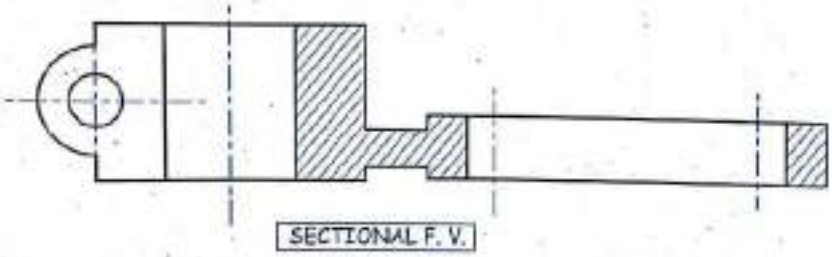

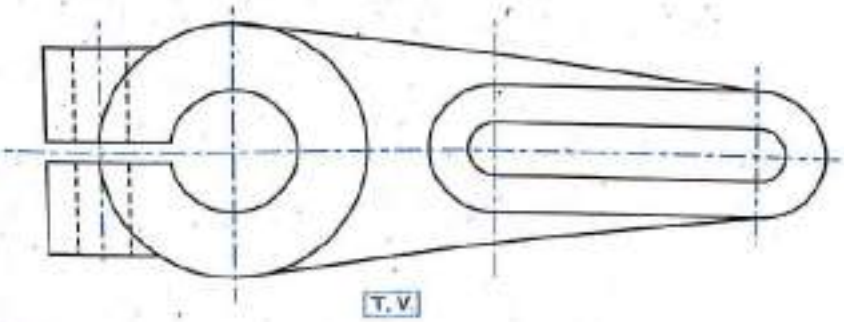

Scanned by CamScanner

Solution 11

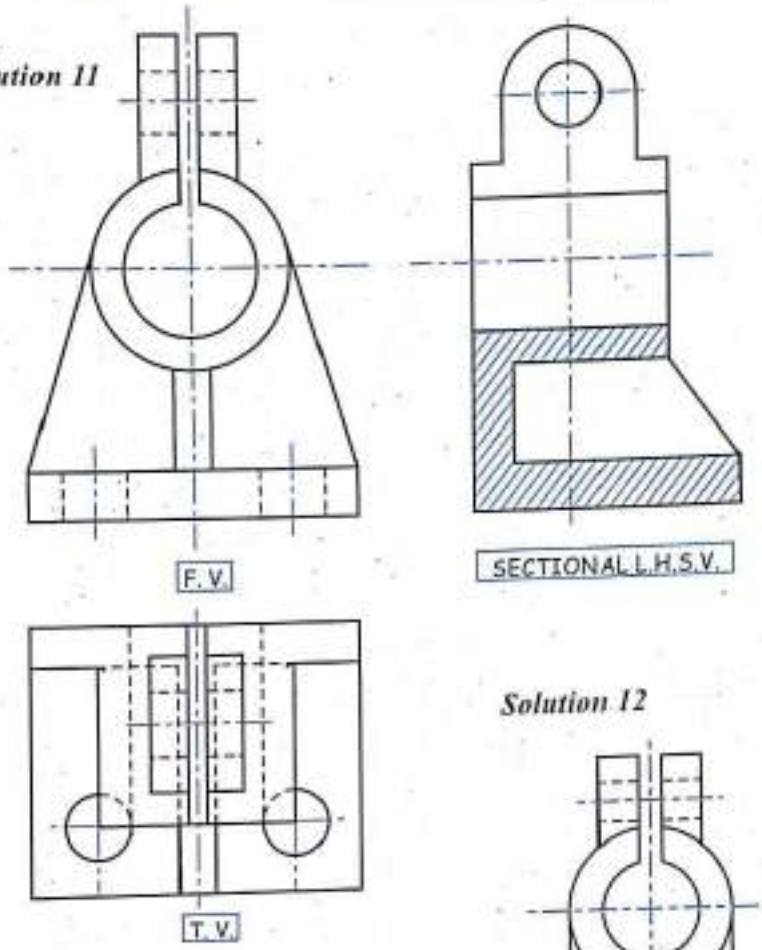

Solution 12

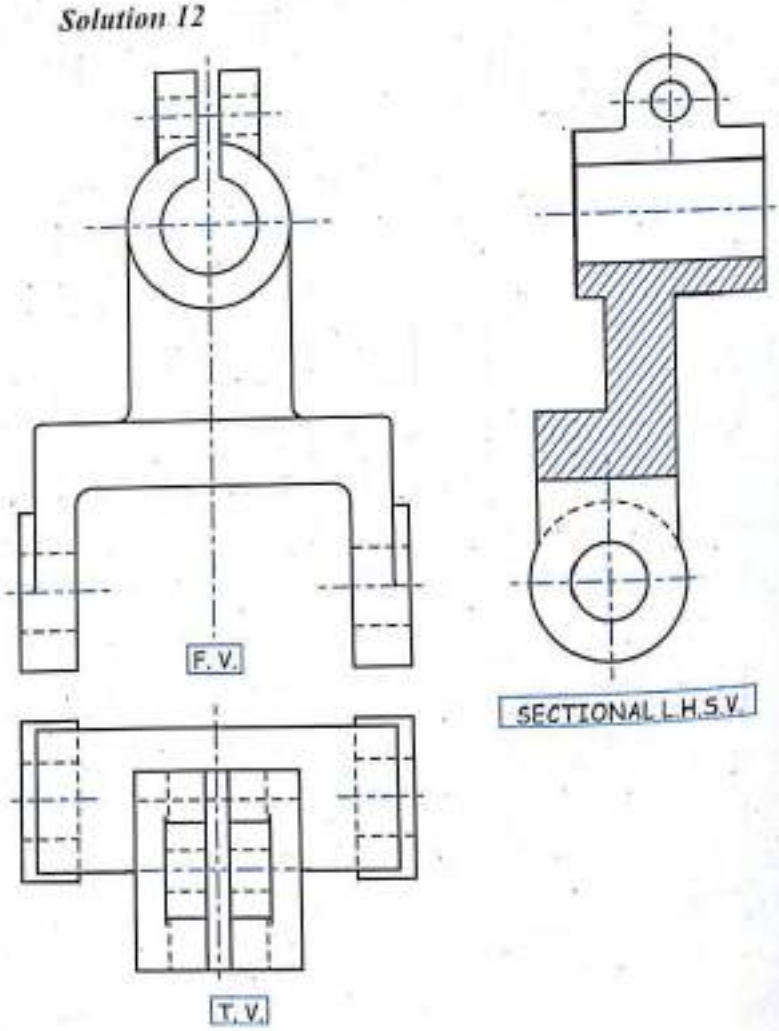

Scanned by CamScanner

Solution 13

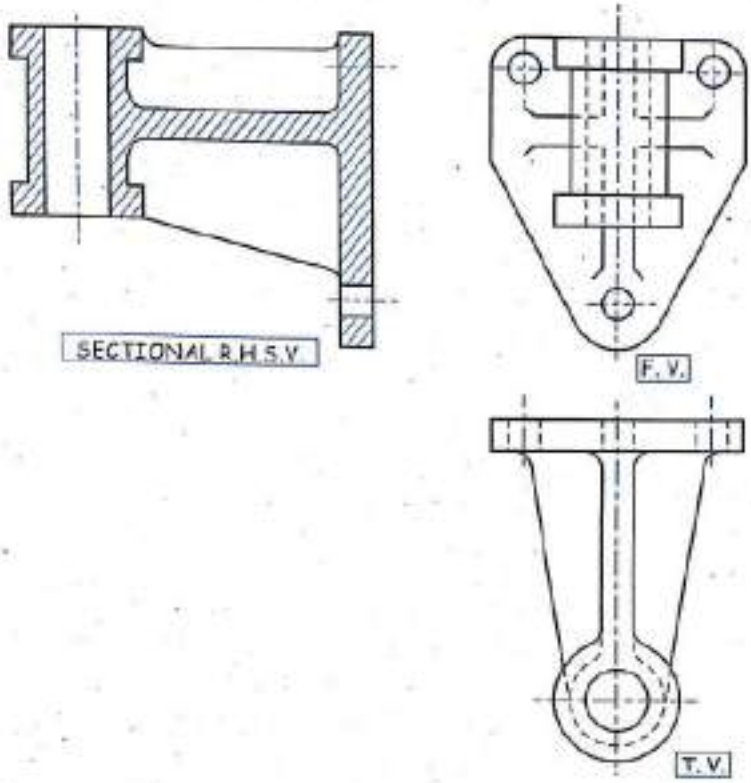

Solution 14

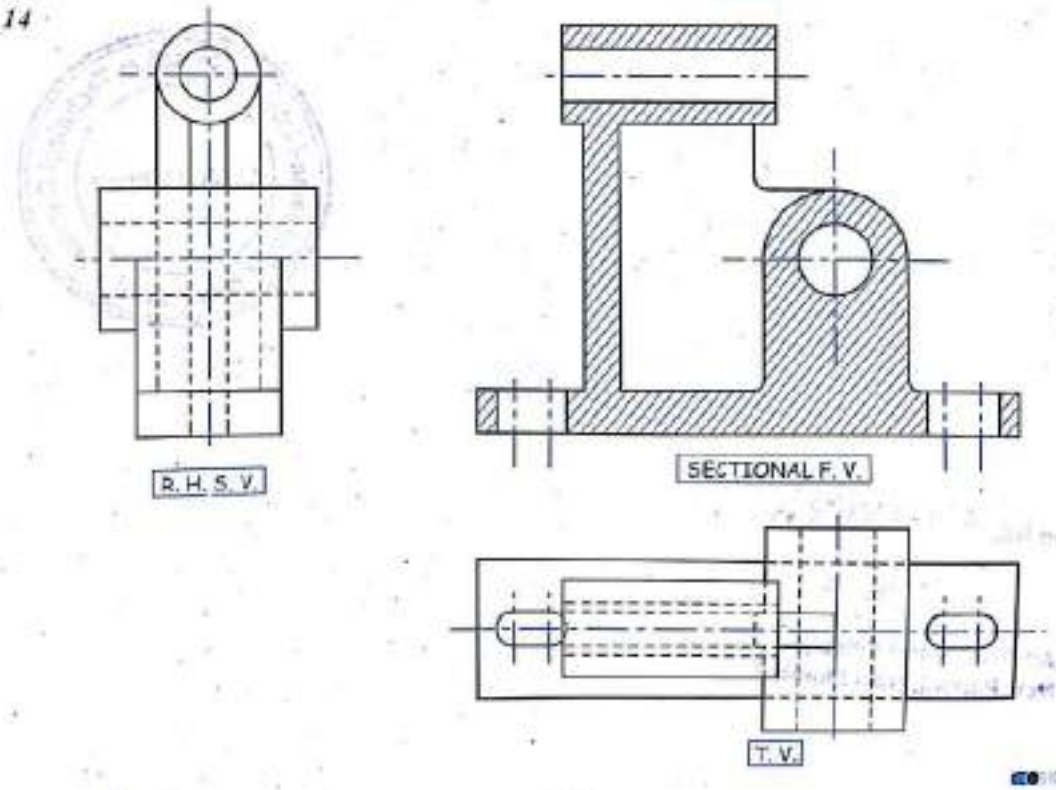

Scanned by CamScanner