A

Report on

"Carbon Capture & Storage using Direct Air Capture Technology"

Submitted to

Shivaji University, Kolhapur

In Partial Fulfillment of therequirement for the degree of

Final Year of B. Tech

(ELECTRONIC AND TELECOMMUNICATION ENGINEERING)

Submitted by

PRN	Name of Student
2021000347	Mr. Vaibhav Ramesh Kashid
2021000722	Miss. Bhoomy Durgesh Lingras
2021000732	Mr. Shreyash Amrut Desai
2122010119	Mr. Archit Raghavendra Kulkarni

Under the guidance of

Prof. A.R. Nigavekar

Submitted at

KOLHAPUR INSTITUTE OF TECHNOLOGY'S
COLLEGE OFENGINEERING (AUTONOMOUS), KOLHAPUR

Year 2023-24

CERTIFICATE

This is to certify that **Mr. Vaibhav Ramesh Kashid (2021000347), Miss. Bhoomy Durgesh Lingras (2021000722), Mr. Shreyash Amrut Desai (2021000732), Mr. Archit Raghavendra Kulkarni (2122010119)** have completed the Project Part-I on subject entitled **"Carbon Capture & Storage using Direct Air Capture Technology"**, in the fulfillment of the requirement for the award of Final Year (Electronics and Telecommunication Engineering) of **KIT'sCollege of Engineering, Kolhapur** in the academic year **2023-24**.

Date:

Place: Kolhapur

Prof. A.R. Nigavekar **Project Guide**	**External Examiner**	Prof. Y. M. Patil **Head ETC**

Dr. M. B. Vanarotti

Director

DECLARATION

We hereby declare that the Project entitled, "**Carbon Capture & Storage using Direct Air Capture Technology**" Phase-II project report submitted to **KIT's College of Engineering, Kolhapur, Maharashtra, INDIA** in the partial fulfilment of the requirement for the "**Electronics & Telecommunication**" is a bona fide work carried out by us. The material contained in this Project has not been submitted to any University or Institution for the award of any degree.

Name of the Students:

Roll No.	Name	PRN No.	Signature
37	Vaibhav Ramesh Kashid	2021000347	
38	Bhoomy Durgesh Lingras	2021000722	
39	Shreyash Amrut Desai	2021000732	
40	Archit Raghavendra Kulkarni	2122010119	

Date:

Place: Kolhapur

ACKNOWLEDGMENT

We would like to express our deep gratitude towards Prof. A.R. Nigavekarand Dr. Y.M. Patil Head of Department for their constant encouragement and guidance. Their support and cooperation throughout the project work has been ofimmense help to us.

We express our sincere thanks to all the teaching and non-teaching staff and all those who have directly or indirectly helped in making the project a success.

PRN No.	Name of Student
2021000347	Mr. Vaibhav Ramesh Kashid
2021000722	Miss. Bhoomy Durgesh Lingras
2021000732	Mr. Shreyash Amrut Desai
2122010119	Mr. Archit Raghavendra Kulkarni

Contents

1. ABSTRACT 6
2. INTRODUCTION 7
2.1. CCS Technology: 7
2.2 Background and Significance of Carbon Capture and Storage 7
2.3. Overview of Direct Air Capture (DAC) Technology: 7
2.4. DAC Importance: 7
2.5. Project Objectives: 8
3. REVIEW OF LITERATURE 9
3.1. Review of Existing Literature on CCS and DAC Technology 10
3.2. Summary of Key Findings 10
3.3. Discussion on the Current State of DAC Technology, Challenges, and Opportunities 11
4. Problem Definition 13
5. Methodology 14
5.1. Development of an Efficient DAC Technology: 14
5.2. Scalability and Cost Reduction: 14
5.3. Carbon Utilization and Storage: 14
5.4. Environmental Sustainability: 14
6. System Design 15
6.1. Circuit Block diagram 15
6.2. Schematic 15
6.3. DAC System, Including Components and Subsystems 16
6.3.1. Main Block Diagram 17
6.3.2. Explanation of the Design Considerations for Efficiency, Scalability, and Cost-Effectiveness 18
7. Hardware and Software Required 19
7.1. HARDWARE 19
7.2. SOFTWARE 27
7.2.1. SOLIDWORKS 27
7.2.2. Arduino IDE 28
8. Procedure 30
9. CONCLUSION 31
10. REFERENCES 32

1. ABSTRACT

Addressing the pressing global challenge of rising atmospheric carbon dioxide (CO2) levels demands innovative solutions to achieve climate stability. Current reduction efforts fall short of meeting necessary targets, underscoring the urgency for effective interventions. Direct Air Capture (DAC) technology emerges as a promising avenue, yet it grapples with hurdles related to cost, energy efficiency, and scalability. The crux of this mega project involves optimizing room-scale DAC technology through an open-source framework, leveraging crowd-sourced ideas, and a collaborative open data set for iterative enhancements. With a keen understanding of the potential consequences of unchecked CO2 levels, the overarching objective is to elevate carbon dioxide capture efficiency, champion sustainability, and decisively combat climate change. This mega project stands poised to catalyze transformative advancements, galvanizing collective efforts toward a more sustainable future.

2. INTRODUCTION

2.1. CCS Technology:

Carbon Capture and Storage (CCS) is a critical technology aimed at reducing greenhouse gas emissions, particularly carbon dioxide (CO2), from industrial processes and power generation. The Intergovernmental Panel on Climate Change (IPCC) highlights CCS as one of the key strategies to limit global warming to well below 2°C. The process involves capturing CO2 emissionsfrom point sources such as power plants or industrial facilities, transporting it to storage sites, and securely storing it underground in geological formations, preventing it from entering the atmosphere and contributing to climate change.

2.2. Background and Significance of Carbon Capture & Storage:

The concept of CCS has gained significant attention in recent decades due to theurgent need to mitigate climate change and reduce CO2 emissions. The burning of fossil fuels for energy production is a major contributor to CO2 emissions,and CCS offers a way to capture and store this CO2 before it reaches the atmosphere. By preventing CO2 emissions from entering the atmosphere, CCSscan help to achieve climate targets and transition to a low-carbon economy while maintaining reliable energy supplies from fossil fuels during the transitionperiod.

2.3. Overview of Direct Air Capture (DAC) Technology:

Direct Air Capture (DAC) technology is an innovative approach to capturing CO2 directly from the atmosphere, regardless of the source of emissions. Unlike traditional CCS, which captures CO2 from point sources, DAC systems can be deployed anywhere, making them versatile and scalable. DAC technology typically involves large-scale chemical processes or sorbent materials that selectively capture CO2 from ambient air. Once captured, the CO2 can be storedunderground or utilized in various industrial processes, such as enhanced oil recovery or production of synthetic fuels.

2.4. DAC Importance:

DAC technology plays a crucial role in complementing traditional CCS methods by offering a means to address emissions from sources that are difficult to capture, such as transportation and agriculture. It provides a pathway to achieve negative emissions, where more CO2 is removed from the atmosphere than emitted, helping to offset remaining emissions from sectors that are challenging to decarbonize. DAC can also be integrated with renewable energy sources to create carbon-negative energy systems, further reducing the carbon footprint of human activities.

2.5. Project Objectives:

The primary objective of this project is to investigate the feasibility and effectiveness of Direct Air Capture (DAC) technology for carbon capture and storage (CCS) applications. Specifically, the project aims to:

- Assess the technical and economic viability of DAC systems for capturing CO2 from the atmosphere.
- Develop and optimize a DAC system prototype or model for carbon capture.
- Evaluate the environmental benefits and potential scalability of DAC technology for mitigating climate change.
- Explore potential challenges and opportunities associated with the implementation of DAC technology at scale.
- Provide recommendations for policy-makers, industry stakeholders, andresearchers on the role of DAC in achieving climate goals and transitioning to a low-carbon future.

3. REVIEW OF LITERATURE

- By referring to paper [1], we understood about a technology assessment of DAC with a focus on the chemical processes involved. It discusses the feasibility and challenges associated with DAC technology.
- By referring to paper [2], we understood that this study explores the optimization of a specific DAC system utilizing a two-loop hydroxide carbonate process. It discusses improvements in efficiency and performance through countercurrent air flow.
- By referring to this research article [3], we got to know the transition of DAC technology from laboratory-scale experiments to demonstration projects. It highlights advancements made in scaling up DAC systems.
- After going through this review paper [4], we got to know the relevance of CCS technologies, including DAC, in mitigating CO2 emissions. It addresses the challenges and opportunities specific to the Indian context.
- The review presented in reference [5] provides an overview of various CO2 capture technologies, including DAC, highlighting their challenges and potential solutions. It discusses the technical aspects and economic considerations of CCS.
- After referring to the article of reference [6], we understood the cost implications of CCS technologies, including DAC, emphasizing the importance of cost reduction strategies for widespread deployment. It discusses factors influencing the cost of CO2 capture and storage.
- By referring to this article [7], we got to know the state-of-the-art DAC technologies, their mechanisms, and potential applications. It explores the scientific and engineering aspects of DAC.
- By referring to paper [8], we understood about different solvents used for CO2 absorption from flue gas, a process relevant to DAC technology. It discusses the properties and performance of various solvents and their implications for CO2 capture efficiency.

3.1. Review of Existing Literature on CCS and DAC Technology

Carbon Capture and Storage (CCS) and Direct Air Capture (DAC) technologies have gained significant attention in recent years due to their potential to mitigate carbon dioxide (CO2) emissions and combat climate change. A thorough review ofexisting literature reveals a wealth of research papers, journals, and reports focusedon various aspects of CCS and DAC technology.

Numerous studies have explored the technical feasibility, economic viability, and environmental implications of CCS and DAC implementations. These investigations encompass a wide range of topics, including capture technologies, storage methods, cost analyses, policy frameworks, and environmental impacts.

3.2. Summary of Key Findings

Key findings from relevant literature emphasize the following points:

1. **Technical Feasibility**: Research indicates that both CCS and DAC technologies are technically feasible for capturing CO2 emissions from various sources, including industrial processes and the atmosphere. Advances in capture techniques, such as solvent-based absorption and solid adsorption, have demonstrated high CO2 capture efficiencies.

2. **Economic Viability**: While CCS and DAC technologies have historically faced economic challenges, recent studies suggest that cost reductions are achievable through technological innovation, scale-up, and policy support. Cost analyses highlight the importance of considering factors such as energy requirements, capital investments, and operational expenses in evaluating the economic feasibility of CCS and DAC projects.

3. **Environmental Implications**: Assessments of the environmental impacts associated with CCS and DAC implementations underscore the importance of lifecycle assessments and sustainability considerations. While CCS offers the potential to reduce CO2 emissions from stationary sources, concerns exist regarding leakage risks and the long-term integrity of storage reservoirs. Similarly, DAC technologies raise questions about energy consumption, land use, and the potential for unintended environmentalconsequences.

4. **Policy and Regulatory Frameworks**: The development of supportive policy frameworks and regulatory incentives is identified as a crucial enabler for the deployment of CCS and DAC technologies at scale. Initiatives such as carbon pricing mechanisms, tax credits, and research funding play significant roles in driving innovation and investment in carbon capture and storage initiatives.

3.3. Discussion on the Current State of DAC Technology, Challenges, and Opportunities

Despite significant progress in research and development, several challenges persist in the advancement and widespread adoption of DAC technology:

1. **Energy Intensity**: DAC technologies currently exhibit high energy requirements, primarily due to the need for air circulation, CO2 capture, and regeneration processes. Addressing the energy intensity of DAC systems is critical to improving efficiency and reducing operational costs.

2. **Cost Competitiveness**: While cost reductions have been achieved in recent years, DAC remains more expensive than conventional carbon abatement strategies such as emission reductions and renewable energy deployment. Enhancing cost competitiveness through technological innovation and economies of scale is essential to unlocking the full potential of DAC as a climate mitigation tool.

3. **Scale-Up and Deployment**: Scaling up DAC technology from laboratory prototypes to commercial-scale installations presents logistical and infrastructural challenges. Deploying DAC facilities at the necessary scale requires significant investment, infrastructure development, and regulatory approvals.

4. **Carbon Utilization and Storage**: Utilizing captured CO2 for beneficial purposes, such as enhanced oil recovery or the production of synthetic fuels, can enhance the economic viability of DAC projects. However, ensuring the permanent and secure storage of captured CO2 remains a critical consideration for long-term carbon management.

Despite these challenges, DAC technology offers several opportunities for addressing global carbon emissions:

1. **Negative Emissions**: DAC provides a pathway for achieving negative emissions by actively removing CO2 from the atmosphere. Integrating DAC with carbon utilization and storage strategies can enable net-negative emissions, helping to offset residual emissions from hard-to-abate sectors.

2. **Flexibility and Location Independence**: Unlike traditional carbon capture technologies, DAC systems are not limited by the proximity of emission sources, offering flexibility in deployment and location independence. This characteristic makes DAC particularly suitable for capturing emissions from dispersed sources and addressing CO2 emissions from sectors

such as aviation and agriculture.

3. **Technological Innovation**: Continued research and development efforts are driving technological innovation in DAC, leading to efficiency improvements, cost reductions, and novel capture approaches. Advances in materials science, engineering design, and process optimization hold promise for further enhancing the performance and scalability of DAC systems.

4. **Climate Resilience**: DAC technology offers potential benefits for climate resilience by providing a means to actively remove CO2 from the atmosphere, thereby helping to mitigate the impacts of climate change. As part of a comprehensive climate mitigation strategy, DAC can contribute to achieving ambitious emissions reduction targets and safeguarding vulnerable ecosystems.

4. Problem Definition

Addressing the critical threat posed by rising atmospheric carbon dioxide (CO2) levels to global climate stability requires an innovative approach. Current efforts to reduce CO2 emissions fall short, necessitating the optimization of Direct Air Capture (DAC) technology. However, DAC faces challenges in cost-effectiveness, energy efficiency, and scalability. The goal is to improve room-scale DAC systems through an open-source approach, using crowd-sourced ideas and open data for iterative enhancements. By boosting CO2 capture efficiency, this initiative aims to promote sustainability and combat climate change effectively. The focus is on collaborative innovation to refine DAC technology for a more resilient and eco-friendly future.

5. Methodology

The objective of this project is to design, develop, and implement an innovative Direct Air Capture (DAC) system that addresses the urgent need for scalable and sustainable carbon removal solutions. This project aims to contribute to the mitigation of climate change by achieving the following key objectives:

5.1. Development of an Efficient DAC Technology:

- Design and construct a state-of-the-art DAC system that maximizes CO2 capture efficiency while minimizing energy consumption.
- Investigate and integrate advanced capture materials and methods, such as chemical sorbents, adsorption technologies, and electrochemical approaches, to enhance DAC systemperformance.

5.2. Scalability and Cost Reduction:

- Engineer the DAC system with scalability in mind, ensuring it can be deployed at a sizeable capacity to have a meaningful impact on CO2 removal.
- Explore innovative engineering and manufacturing processes to reduce the overall cost of DAC technology, making it economically viable for widespread deployment.

5.3. Carbon Utilization and Storage:

- Investigate opportunities for the utilization of captured CO2, such as in the production of carbon-neutral fuels, construction materials, or other value-added products.
- Implement effective and environmentally responsible strategies for the secure and long-term storage of captured CO2, including geologic storage and utilization in carbon-negative applications.

5.4. Environmental Sustainability:

- Conduct a comprehensive life cycle assessment (LCA) to evaluate the environmental footprint of the DAC system, taking into account emissions associated with construction, operation, and decommissioning.
- Develop strategies to minimize water usage, land footprint, and other potential environmental impacts associated with DAC deployment.

6. System Design

6.1. Circuit Block diagram

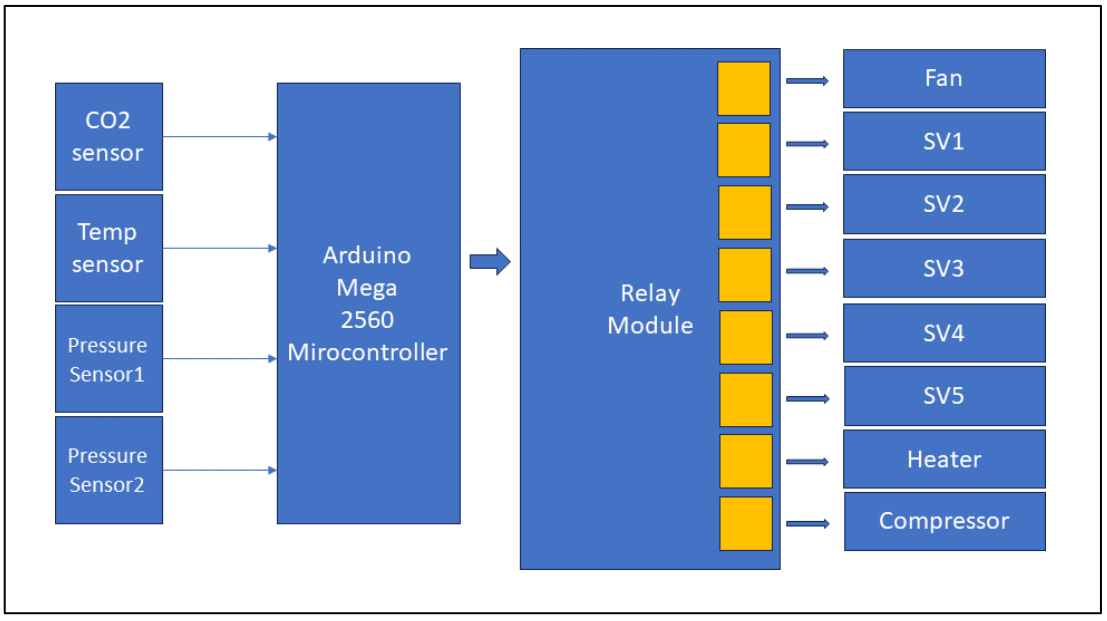

Fig- Circuit Block Diagram

6.2. Schematics

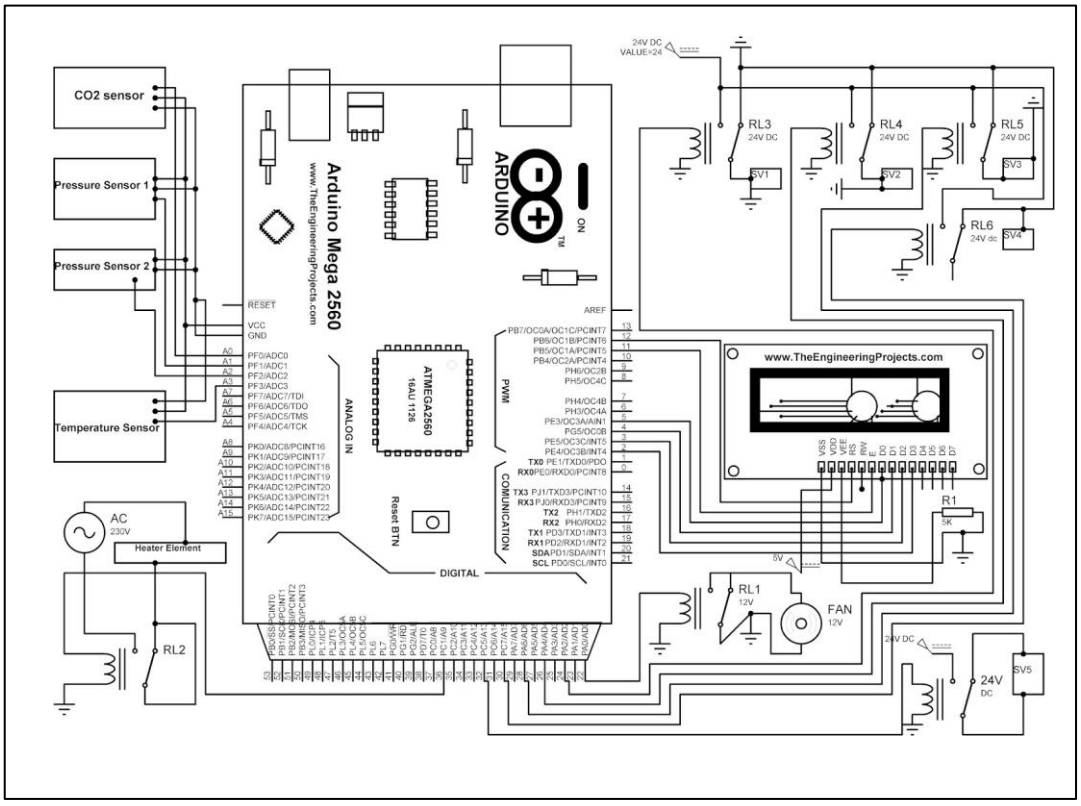

Fig- Schematics

6.3. DAC System, Including Components and Subsystems

The Direct Air Capture (DAC) system is designed to capture carbon dioxide (CO2) directly from the atmosphere using a combination of capture, separation, and storage processes. The system comprises several key components and subsystems, each playing a critical role in the overall functionality and performance of the DAC system:

- **Air Intake System**: The DAC system begins with an air intake system responsible for drawing ambient air into the capture unit. This system typically consists of intake vents or fans to facilitate the flow of air into the capture chamber.

- **Capture Chamber**: The capture chamber is the primary component where CO2 is captured from the ambient air. Various capture technologies can be employed, including chemical absorption, adsorption onto solid sorbents, or membrane separation. The choice of capture technology depends on factors such as efficiency, selectivity, and scalability.

- **CO2 Separation Unit**: Following capture, the CO2 must be separated from the capture medium for storage or utilization. Separation processes may involve desorption, regeneration, or purification steps to isolate the captured CO2 from the capture medium. Common separation techniques include thermal regeneration, pressure swing adsorption, or cryogenic distillation.

- **CO2 Storage and Utilization**: The separated CO2 can be stored underground in geological formations, utilized for enhanced oil recovery, or converted into valuable products such as synthetic fuels or building materials. The design of the storage and utilization subsystems depends on the intended application and regulatory requirements.

- **Energy and Heat Management**: The DAC system requires energy inputs for air circulation, capture, separation, and regeneration processes. Efficient energy management strategies, such as heat recovery, process integration, and renewable energy integration, are essential for minimizing energy consumption and enhancing system efficiency.

- **Monitoring and Control System**: To ensure optimal performance and operational safety, the DAC system incorporates monitoring and control systems for real-time monitoring of key parameters, process optimization, and fault detection. Sensors, actuators, and control algorithms are deployed to maintain system stability and reliability.

6.3.1. Main Block Diagram

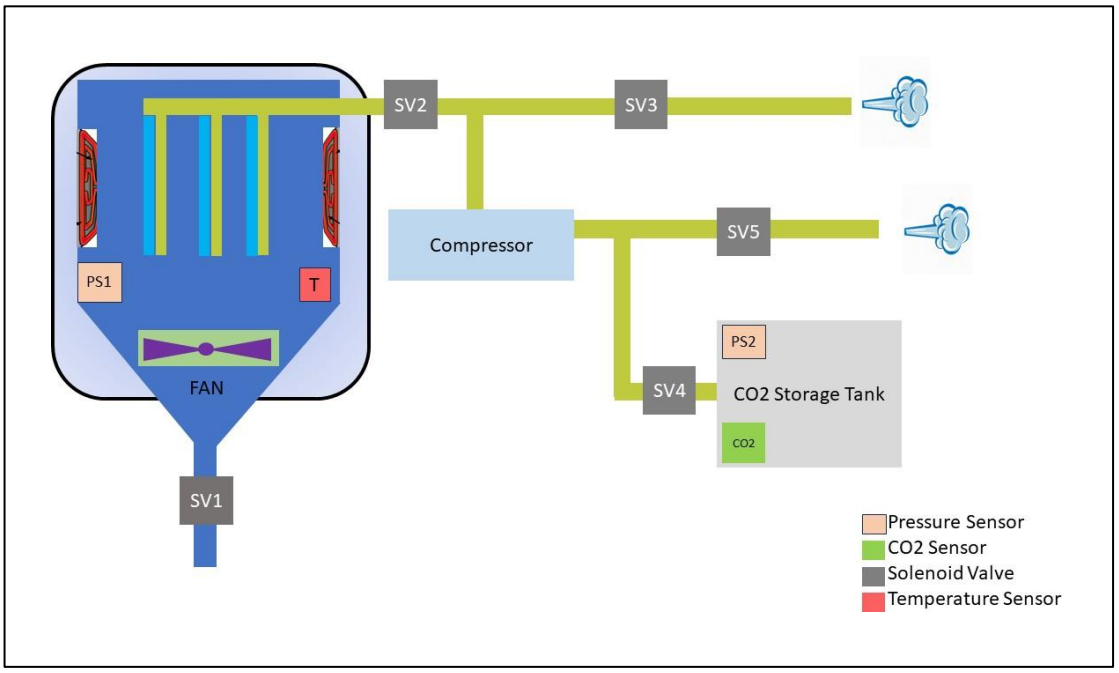

Fig. Carbon Capture and Storage using DAC Technology

The operation of the DAC system can be illustrated through schematic diagrams or flowcharts, outlining the sequence of processes and interactions between system components. A simplified flowchart of the DAC system operation include the following steps:

1. **Air Intake:** Ambient air is drawn into the capture chamber through intake vents or fans.

2. **CO2 Capture:** CO2 is captured from the incoming air using a capture medium or technology (e.g., chemical absorption, adsorption).

3. **CO2 Separation:** The captured CO2 is separated from the capture medium through desorption or regeneration processes.

4. **Storage/Utilization:** The separated CO2 is either stored underground or utilized for various applications such as enhanced oil recovery or synthetic fuel production.

5. **Energy Management:** Energy inputs are managed efficiently to power the operation of the DAC system, with considerations for energy recovery andrenewable energy integration.

6. **Monitoring and Control:** The system is monitored in real-time, and control algorithms adjust operating parameters to optimize performance and ensure safe operation.

6.3.2. Explanation of the Design Considerations for Efficiency, Scalability, and Cost-Effectiveness

Efficiency, scalability, and cost-effectiveness are critical design considerations forthe DAC system:

1. **Efficiency**: The efficiency of the DAC system is influenced by factors such as capture efficiency, energy consumption, and process integration. Design considerations focus on optimizing capture and separation processes, minimizing energy requirements, and maximizing the utilization of captured CO2.

2. **Scalability**: The scalability of the DAC system is essential for deploying large-scale installations capable of capturing significant quantities of CO2. Design considerations include modularization, equipment sizing, and process optimization to facilitate the expansion of the system while maintaining performance and reliability.

3. **Cost-Effectiveness**: Achieving cost-effectiveness involves balancing capital investments, operational expenses, and lifecycle costs. Design considerations include the selection of cost-competitive materials and technologies, process optimization for resource efficiency, and the integration of renewable energy sources to reduce operating costs.

7. Hardware and Software Required

7.1 HARDWARE

1. **Microcontroller Board: -**

The Arduino Mega microcontroller board was chosen due to several key reasons:

- **Extensive I/O Capabilities:** The Arduino Mega offers a large number of digital and analog input/output pins, making it suitable for connecting and controlling multiple sensors, actuators, and peripherals simultaneously. This is crucial for a project like DAC technology, which may involve numerous sensors for environmental monitoring, data acquisition, and control purposes.

- **Processing Power:** With its ATmega2560 processor running at 16 MHz and ample flash memory (256 KB), the Arduino Mega provides sufficient processing power and storage capacity to handle complex algorithms, data processing tasks, and control logic required in DAC systems. This is important for real-time monitoring, control, and decision-making processes within the system.

- **Compatibility and Community Support:** Arduino boards, including the Mega, benefit from a vast community of developers, makers, and enthusiasts. This ensures a wide range of compatible libraries, example codes, tutorials, and community forums where you can seek assistance, share ideas, and troubleshoot issues encountered during the project. This support network can significantly expedite development and reduce implementation challenges.

- **Expandability and Modularity:** The Arduino Mega's modular design allows for easy expansion through shields and modules, providing flexibility to add additional functionality or interface with external devices as needed for your DAC technology project. This scalability is advantageous for future upgrades or modifications to the system.

- **Cost-Effectiveness:** Compared to some other microcontroller boards with similar capabilities, the Arduino Mega offers a balance of features, performance, and affordability. This makes it a cost-effective choice for projects with demanding I/O requirements and processing tasks, such as Direct Air Capture technology development.

Specifications:

- Microcontroller: ATmega2560
- Operating Voltage: 5V
- Input Voltage (recommended): 7-12V
- Input Voltage (limits): 6-20V
- Digital I/O Pins: 54 (of which 15 provide PWM output)
- Analog Input Pins: 16
- DC Current per I/O Pin: 20 mA
- DC Current for 3.3V Pin: 50 mA
- Flash Memory: 256 KB (8 KB used by bootloader)
- SRAM: 8 KB
- EEPROM: 4 KB
- Clock Speed: 16 MHz

2. **Pressure Sensor: -**

The PT9544 pressure sensor is used due to its suitability for measuring pressure in the context of atmospheric conditions and vacuum systems.

- **Pressure Range:** The PT9544 sensor is designed to measure a wide pressure range, typically from atmospheric pressure down to vacuum levels. This range is relevant for DAC technology, where pressure measurements may span from ambient air pressure to lower pressures within the capture and storage systems.

- **Accuracy and Precision:** The PT9544 sensor offers good accuracy and precision in pressure measurements, which is essential for capturing reliable data in DAC processes. Accurate pressure readings are crucial for monitoring and controlling the operation of air capture units, ensuring optimal performance and efficiency.

- **Compact and Versatile:** The compact size of the PT9544 sensor makes it easy to integrate into your DAC system without occupying excessive space. Its versatility allows for flexible installation options, enabling precise pressure measurements at key points within the capture and storage infrastructure.

- **Reliability and Durability:** The PT9544 sensor is designed for reliable long-term performance, with features that enhance durability in varying environmental conditions. This reliability is crucial for continuous and accurate pressure monitoring in DAC systems, contributing to the overall effectiveness and stability of the technology.

Specifications:

- Pressure Range: Typically, 0 to 10 bar (other pressure ranges may be available)
- Output Signal: Analog (0-10V or 4-20 mA) (±0.5% of Full Scale (FS))
- Supply Voltage: 10-30 VDC
- Operating Temperature: -25°C to 85°C
- Electrical Connection: M12 connector or cable
- Material: Stainless steel (housing)

- Protection Rating: IP65/IP67 (depending on the variant)

3. CO2 Sensor: -

The Sensirion Non-Dispersive Infrared (NDIR) CO2 sensor was selected for several compelling reasons:

- **Accurate CO2 Measurement:** NDIR sensors are known for their high accuracy in measuring CO2 concentrations. This is critical in DAC systems, where precise monitoring of CO2 levels in the air is essential for capturing and storing carbon dioxide effectively.

- **Wide Measurement Range:** The Sensirion NDIR CO2 sensor typically offers a wide measurement range, allowing it to accurately detect CO2 concentrations ranging from ambient levels to higher concentrations encountered in DAC processes.

- **Stability and Long-Term Performance:** NDIR technology provides stable and reliable CO2 measurements over extended periods, making it suitable for continuous monitoring and control applications in DAC systems. Consistent performance is vital for maintaining the efficiency and effectiveness of CO2 capture and storage processes.

- **Low Power Consumption:** Many NDIR CO2 sensors, including those from Sensirion, are designed to operate with low power consumption. This is advantageous for energy-efficient operation, especially in remote or off-grid DAC installations where power conservation is a priority.

Specifications:

- Measurement Principle: Non-Dispersive Infrared (NDIR)
- Carbon Dioxide (CO2) Measurement Range: 0-40,000 parts per million (ppm)
- Accuracy: ± (30 ppm + 3% of measured value) within 400-10,000 ppm
- Response Time: <2 minutes (for 63% step change)
- Temperature Range (Operating): 0°C to 50°C
- Humidity Range (Operating): 0% to 100% RH (non-condensing)
- Supply Voltage: 3.3 V to 5.5 V
- Communication Interface: I2C (up to 400 kHz) and UART (up to 115200 bps)

- Dimensions: 35.6 mm x 23.3 mm x 3 mm (L x W x H)
- Digital Output Resolution: 16-bit
- Power Consumption (Average): 19 mA @ 3.3 V (continuous operation)
- Warm-up Time: <30 seconds

4. Molecular Sieves: -

Molecular sieves specifically 13X taken into consideration due to its various abilities.

- **Selective Adsorption:** Molecular sieves are designed to selectively adsorb molecules of specific sizes. 13X sieves are known for their ability to selectively adsorb CO2 from air while allowing other gases like nitrogen and oxygen to pass through.

- **High Capacity:** 13X molecular sieves have a high CO2 adsorption capacity, meaning they can capture a significant amount of CO2 per unit weight or volume of the sieves. This high capacity is crucial for efficient DAC systems.

- **Regenerability:** Molecular sieves can be regenerated by desorbing the captured CO2, allowing them to be reused multiple times. This makes them cost-effective and environmentally friendly compared to single-use adsorbents.

- **Stability:** 13X molecular sieves are stable under a wide range of operating conditions, including varying temperatures and pressures commonly encountered in DAC systems.

- **Commercial Availability:** These sieves are commercially available in large quantities, making them readily accessible for DAC projects at scale.

Specifications:

- Type: 13X (Type X) molecular sieves
- Pellet Diameter: 1.6 mm (other diameters may also be available)
- Adsorbate: Primarily used for adsorption of CO2 from air

- Pore Size: Approximately 10 angstroms (1 nanometer), suitable for capturing CO2 molecules while allowing smaller molecules like nitrogen and oxygen to pass through
- Surface Area: Typically ranges from 600 to 800 square meters per gram (m^2/g), providing a large surface area for CO2 adsorption
- Adsorption Capacity: Can adsorb a significant amount of CO2 per unit weight of molecular sieves, depending on the specific conditions and activation level

5. Temperature sensor: -

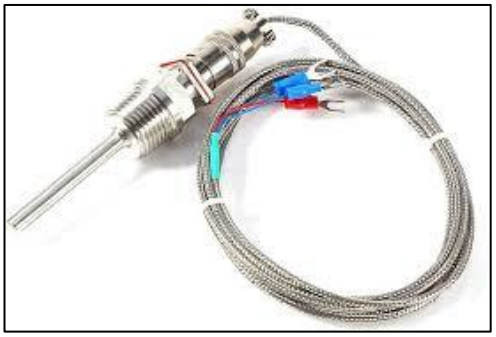

PT100 sensors, also known as platinum resistance temperature detectors (RTDs), are commonly used in projects involving Direct Air Capture (DAC) technology for several reasons:

- **Accuracy:** PT100 sensors offer high accuracy in temperature measurement, which is crucial for monitoring and controlling temperature-sensitive processes in DAC systems. Precise temperature control is often necessary for optimal performance and efficiency.

- **Stability:** PT100 sensors are known for their stability and low drift over time. This ensures that temperature measurements remain reliable and consistent throughout the operation of the DAC system, leading to consistent process performance.

- **Linear Response:** PT100 sensors exhibit a linear response to temperature changes, making it easier to calibrate and interpret temperature readings accurately. This linear response is beneficial for maintaining specific temperature setpoints in DAC processes.

- **Wide Temperature Range:** PT100 sensors can operate in a wide temperature range, including the elevated temperatures that may be encountered in DAC systems during certain processes like CO2 desorption or regeneration of adsorbents.

- **Compatibility:** PT100 sensors are compatible with standard measurement and control systems commonly used in industrial settings, making integration into DAC technology projects relatively straightforward.

- **Industry Standard:** PT100 sensors are widely used and well-established in various industries for temperature sensing applications due to their accuracy, stability, and reliability. This makes them a preferred choice for many DAC technology projects where precise temperature control and monitoring are essential.

Specifications:

The specifications of a PT100 temperature sensor, which is a type of platinum resistance temperature detector (RTD), typically include the following:

- Type: PT100 (Platinum RTD)
- Temperature Range: Standard PT100 sensors can measure temperatures from -200°C to 850°C (-328°F to 1562°F). Extended range PT100 sensors may have wider temperature measurement capabilities.
- Accuracy: PT100 sensors offer high accuracy, often within ±0.1°C to ±1°C depending on the grade and calibration.
- Resistance at 0°C: The resistance of a PT100 sensor at 0°C is 100 ohms (hence the name PT100), which increases linearly with temperature changes.
- Temperature Coefficient: The temperature coefficient of resistance for PT100 sensors is approximately 0.00385 ohms/ohm/°C, which is used in calculations to convert resistance changes into temperature readings.
- Construction: PT100 sensors are typically made of platinum wire wound around a ceramic or glass core to form a resistance element.
- Response Time**:** PT100 sensors have a relatively fast response time, typically within a few seconds for most applications.

6. Solenoid Valve:-

Solenoid valves operating at 24V DC:

- **Controlled Gas Flow:** Solenoid valves are used to control the flow of gases, such as air and CO2, within DAC systems. They allow for precise regulation of gas flow rates, which is critical for maintaining optimal process conditions during CO2 capture, release, and storage phases.
- **Automation:** The use of solenoid valves allows for automation of gas flow control, reducing the need for manual adjustments. This automation improves system efficiency, consistency, and reliability, as it can be integrated into control systems and programmed to operate based on predefined parameters.
- **Response Time:** Solenoid valves have fast response times, enabling rapid opening and closing actions. This quick response is beneficial for immediate adjustments to gas flow rates, especially during dynamic process conditions or in response to system requirements.
- **Compatibility:** Solenoid valves operating at 24V DC are compatible with common power sources and control systems used in industrial settings, making them easy to integrate into DAC technology projects.

Specifications:

- Voltage: 24V DC (Direct Current)
- Valve Type: Normally Closed (NC), meaning the valve is closed when no power is applied to the solenoid coil and opens when energized.
- Operating Pressure Range: Typically, solenoid valves for industrial use can handle pressures ranging from 0 to several hundred pounds per square inch (psi) depending on the specific model and application requirements.
- Flow Rate: Common flow rates range from a few GPM (gallons per minute) to several tens of GPM.

- Valve Size: Solenoid valves come in various sizes, such as 1/4-inch, 1/2-inch, 3/4 inch, and 1 inch, among others. The valve size is selected based on the required flow capacity of the system.

7.2. SOFTWARE

7.2.1. SOLIDWORKS

CAD (computer aided design) design is used in almost every industry, in projects as wide-ranging as landscape design, bridge construction, office building design and movie animation. With 2D or 3D CAD programs, you can perform a variety of tasks: you can create a 3D model of a design, apply material and light effects, and document the design with dimensions and other annotations. With features like point clouds, you can add real-life context to your drawings to create a digital twin or recreate physical objects in your designs. It helps users create designs in either 2D or 3D to visualize construction, and enables the development, modification, and optimization of the design process. This helps designers make more accurate representations and modify them more easily to improve design quality.

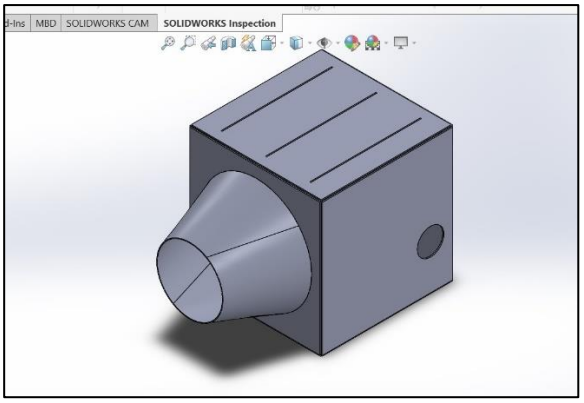

7.2.2. Arduino IDE

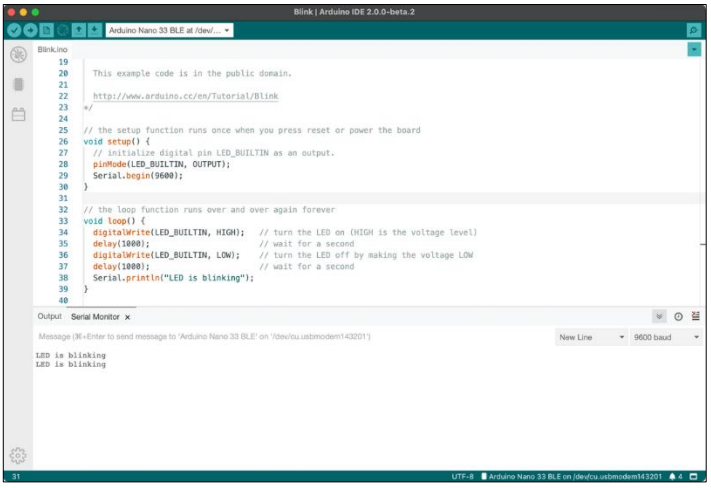

The Arduino IDE (Integrated Development Environment) is a software platform used for programming Arduino boards. Here's some key information about it:

1. Open Source: Arduino IDE is an open-source platform, which means its source code is freely available for modification and distribution.

2. Cross-Platform Compatibility: It's compatible with Windows, Mac OS X, and Linux operating systems, making it accessible to a wide range of users.

3. Programming Language: Arduino IDE primarily uses a simplified version of C++ for programming Arduino boards. It abstracts away a lot of the complexities of traditional C++ programming, making it more accessible to beginners.

4. Code Editor: It provides a code editor where users can write, edit, and save their Arduino sketches (programs). The editor includes features like syntax highlighting, auto-indentation, and code completion to aid in writing code.

5. Library Management: Arduino IDE comes with a library manager that allows users to easily install and manage libraries, which are collections of pre-written code that extend the functionality of Arduino boards.

6. Board Manager: It includes a board manager that enables users to install support for different Arduino boards, including official Arduino boards as well as third-party boards.

7. Serial Monitor: Arduino IDE has a built-in serial monitor tool that allows users to communicate with their Arduino board over a serial connection. This is useful for debugging and monitoring the output of their sketches.

8. Upload Tool: Arduino IDE provides a simple interface for uploading sketches to Arduino boards via USB or other communication interfaces supported by the board.

9. Community Support: There's a large and active community of Arduino users who contribute tutorials, libraries, and troubleshooting advice, making it easier for beginners to get started and for experienced users to find solutions to their problems.

10. Extensibility: Arduino IDE can be extended with plugins and additional tools to enhance its functionality and cater to specific needs.

8. Procedure

1. Inserting Molecules in Chamber

The chamber consists of three separate sorbent panels. Each having capacity to hold 500 gm of 13x molecular sieves.

2. Air Flow

Turn on the fan and vacuum pump. Open the solenoid valaves 1, 2 and 3 and close the solenoid valve 4 and 5. This will allow the air to pass through the molecules.

3. Creating vacuum in chamber

Now turn off the fan and Solenoid valve 1. At normal temperature sorbent molecules will adsorb $CO_2$from air and remaining contents from air will be sucked through vacuum pump and thrown out through Solenoid Valve 5. This process will go on until certain limit of vacuum pressure is reached. This pressure is measured by PT9544 pressure sensor. After that vacuum pump, Solenoid Valve 2 and 5 will become off.

4. Giving heat to the Molecular Sieves

Now Heat the molecules at constant temperature for 75º± 4ºC with help of heating element Nichrome Wire. Here we have programmed microcontroller such that it acts like a thermostat i.e temperature exceeds 75º it will switch off the supply to Nichrome Wire and if temperature goes below 75ºC it will ON the supply to Nichrome Wire. This process will go on for 30 Minutes.

5. Storing CO_2 in Tank and displaying it's Concentration

Now open the Solenoid Valve 2 and 4 and switch on the Vacuum Pump to store the relased CO_2 from molecules into tank. Once the specified level is reached Solenoid Valve 2 and 4 and Vacuum pump will become OFF. Then concentration of CO_2in ppm will be displayed on 16x2 LCD Display.

9. CONCLUSION

The conclusion highlights the potential of Direct Air Capture (DAC) integrated with Carbon Capture and Storage (CCS) to combat CO2 emissions. It emphasizes DAC's scalability, efficiency, and technical aspects like 13x molecular sieves, advanced materials, and energy-efficient operations. Collaboration is crucial for further research, cost reduction, and global deployment of CCS DAC solutions, contributing to a sustainable, carbon-neutral future.

10. REFERENCES

1. "Direct Air Capture of CO2 with Chemicals: A Technology Assessment for the APS Panel onPublic Affairs"
   - Authors: Kurt Zenz House, Christopher H. House
   - Published in: Physics Today
   - Source: https://physicstoday.scitation.org/doi/10.1063/PT.3.3417

2. "Direct Air Capture of CO2 with Chemicals: Optimization of a Two-Loop Hydroxide CarbonateSystem Using a Countercurrent Air Flow"
   - Authors: Paul M. Mathews, Kurt Zenz House, Christopher H. House
   - Published in: Industrial & Engineering Chemistry Research
   - Source: https://pubs.acs.org/doi/10/1021/ie301443

3. "Air Capture of CO2 by Chemical Absorption: From Lab to Demonstration Scale"
   - Authors: David W. Keith, Geoffrey Holmes, David St. Angelo, Kenton Heidel
   - Published in: AIChE Journal
   - Source: https://onlinelibrary.wiley.com/doi/abs/10.1002/aic.10333

4. "Review of Carbon Dioxide Capture and Storage with Relevance to the Indian Power Sector"
   - Authors: Amulya K. N. Reddy, Sujata K. Prakash, Sudhakar S. Patwardhan
   - Published in: Energy for Sustainable Development
   - Source: https://www.sciencedirect.com/science/article/pii/S0973082614000091

5. "Review of CO2 Capture Technologies and Challenges"
   - Authors: Zhen Zhu, Alan J. Hunt
   - Published in: Chemical Engineering Research and Design
   - Source: https://www.sciencedirect.com/science/article/pii/S0263876213001692

6. "The Cost of CO2 Capture and Storage"
   - Authors: Joule A. Bergerson, Brad Stelfox
   - Published in: International Journal of Greenhouse Gas Control
   - Source: https://www.sciencedirect.com/science/article/pii/S1750583612001809

7. "Direct Capture of CO2 from Ambient Air"
   - Authors: David W. Keith
   - Published in: Chemical Reviews
   - Source: https://pubs.acs.org/doi/10.1021/acs.chemrev.8b00799

8. "Review of Solvents for CO2 Absorption from Flue Gas"
   - Authors: Paitoon Tontiwachwuthikul, Apichat Imyen
   - Published in: International Journal of Greenhouse Gas Control
   - Source: https://www.sciencedirect.com/science/article/pii/S1750583612000018