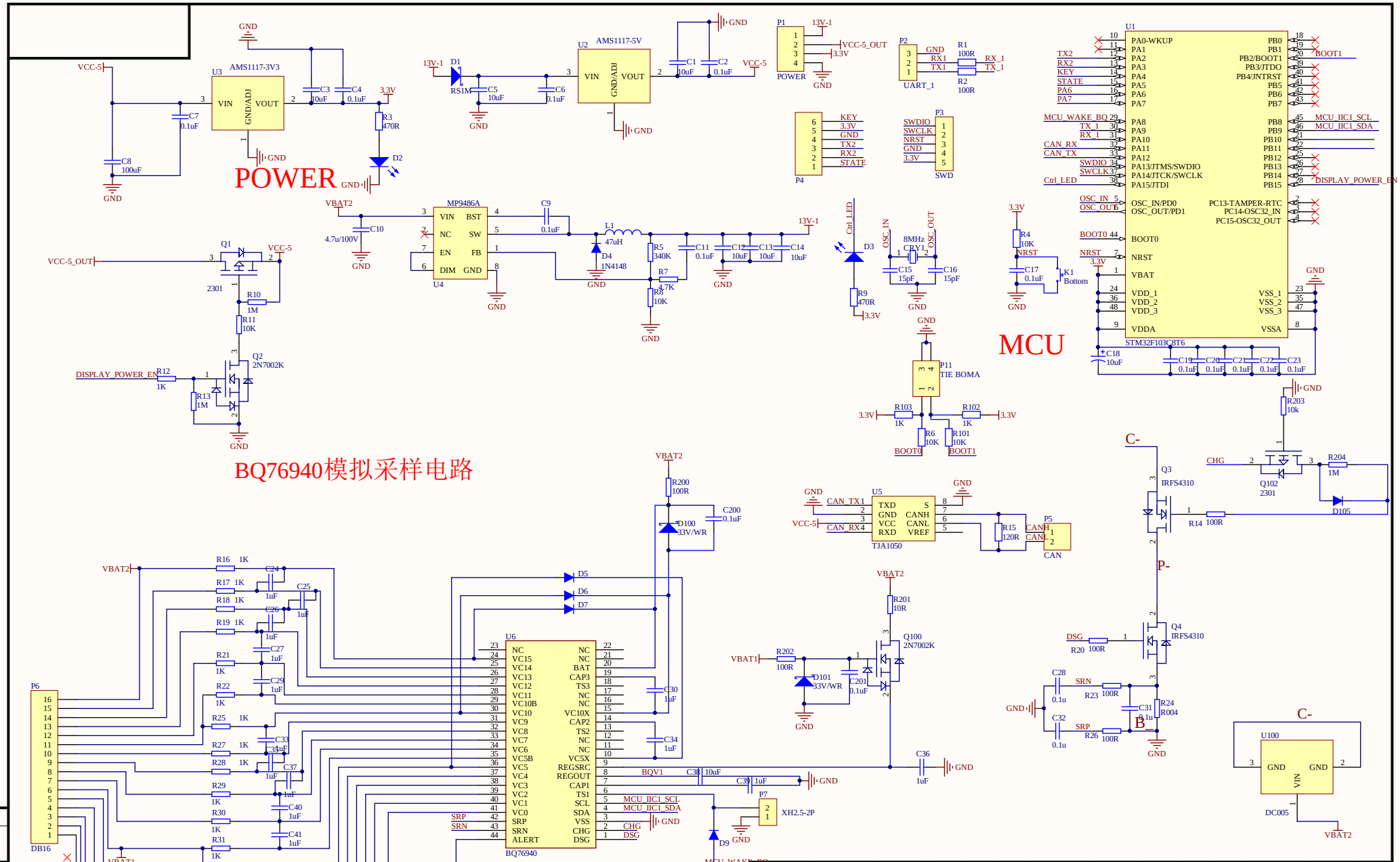
POWER
MCU
BQ76940模拟采样电路
U3 AMS1117-3V3
U2 AMS1117-5V
U4 MP9486A
U1 STM32F103C8T6
U5 TJA1050
U6 BQ76940
P6 DB16
P1 POWER
P2 UART_1
P3 SWD
P4
P5 CAN
P7 XH2.5-2P
P11 TIE BOMA
U100 DC005
Q1 2301
Q2 2N7002K
Q3 IRFS4310
Q4 IRFS4310
Q100 2N7002K
Q102 2301
D1 RS1M
D2
D3
D4 1N4148
D5
D6
D7
D9
D100 33V/WR
D101 33V/WR
D105
K1 Bottom
8MHz CRY1
C-
P-
B-
VCC-5
VCC-5_OUT
VBAT2
VBAT1
13V-1
3.3V
GND
DISPLAY_POWER_EN
MCU_IIC1_SCL
MCU_IIC1_SDA
MCU_WAKE_BQ
BQV1
CAN_TX1
CAN_RX4
CHG
DSG
SRP
SRN
BOOT0
BOOT1
NRST
KEY
STATE
Ctrl_LED
OSC_IN
OSC_OUT
SWDIO
SWCLK
UART_1
POWER
CAN

| 媒体编号 | | |

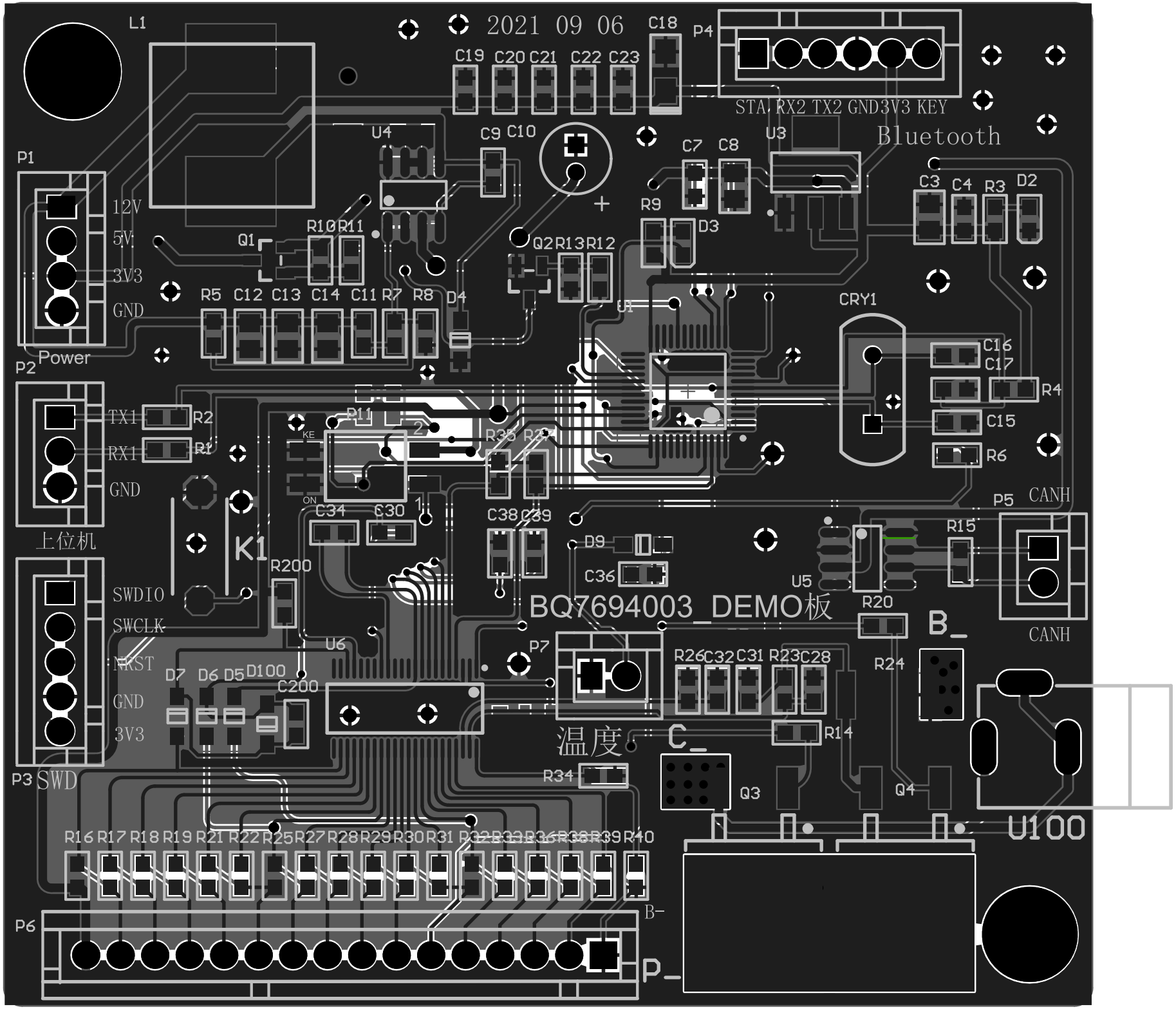
2021 09 06
L1
C18
P4
C19 C20 C21 C22 C23
STA RX2 TX2 GND3V3 KEY
Bluetooth
U4
C9 C10
U3
C7 C8
C3 C4 R3 D2
P1
12V
5V
3V3
GND
Power
Q1
R10 R11
Q2 R13 R12
R9
D3
R5 C12 C13 C14 C11 R7 R8 D4
U1
CRY1
C16
C17
R4
C15
R6
P2
TX1
RX1
GND
R2
R1
P11
R35 R37
C34 C30
C38 C39
D9
C36
上位机
K1
R200
SWDIO
SWCLK
NRST
GND
3V3
P3 SWD
U6
D7 D6 D5 D100
C200
BQ7694003_DEMO板
U5
R20
R15
P5 CANH
CANH
B_
P7
R26 C32 C31 R23 C28
R24
R14
温度
C_
R34
Q3
Q4
U100
R16 R17 R18 R19 R21 R22 R25 R27 R28 R29 R30 R31 R32 R33 R36 R38 R39 R40
P6
B-
P_