CSE271s – PROJECT REPORT.....

SYSTEM DYNAMICS AND CONTROL COMPONENTS

SUPERVISED BY DR. AHMED ZAKI

CONTRIBUTORS LIST

THIS PROJECT WAS MADE POSSIBLE BY THE COMBINED EFFORTS OF 10 STUDENTS

NAME	ID
OMAR MOHAMED IBRAHIM MOHAMED HEGAB	2300110
MARWAN AHMED DORA	2300599
ABDELHAMEID FAWZY ABDELHAMEID	2300399
AHMED MOHAMED MOAWAD	2300519
MOSSAD MOHAMED ELMAHGOB	2300568
AHMED MOHAMED SHEBL	2300223
MAZEN HOSSAM ABAS	2300495
SAFIE TAREK MAHMOUD	2300136
MOAMEN AHMED BADR	2300636
MAHMOUD KHALED MOHAMED ELHAG	2300492

TABLE OF CONTENTS

Project Overview.....1

Block Diagram.....2

Components.....3

Simulation.....6

Calculations.....12

Conclusion.....13

//PROJECT OVERVIEW

This project aims to design a single-axis solar tracker that orients solar panels towards the sun to maximize energy absorption throughout the day. By adjusting the angles of the panels, we can minimize the incidence angle between the incoming sunlight and the panel surface, which in turn maximizes the output energy, particularly from the direct beam, which carries around 90% of the sun's total energy.

By ensuring the panels are constantly aligned with the sun's position, solar trackers significantly improve efficiency and overall energy output of a solar-powered system when compared to fixed installations.

While they do enhance performance, solar trackers can introduce higher installation and maintenance costs. As a result, they are suited for applications where maximizing energy collection is critical, such as off-grid systems or large-scale solar farms aiming for maximum output.

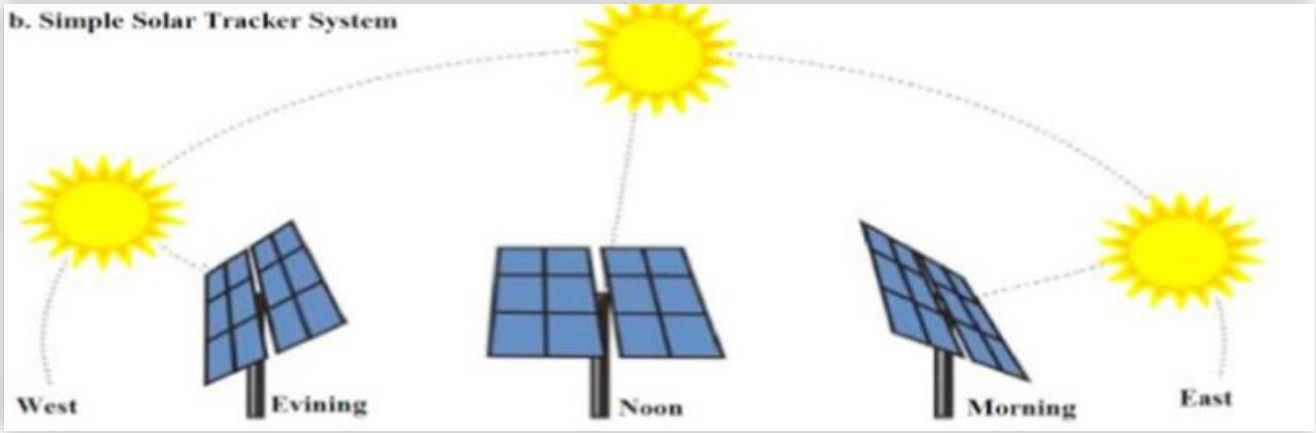

//BLOCK DIAGRAM

The following is a complete block diagram of the circuit.

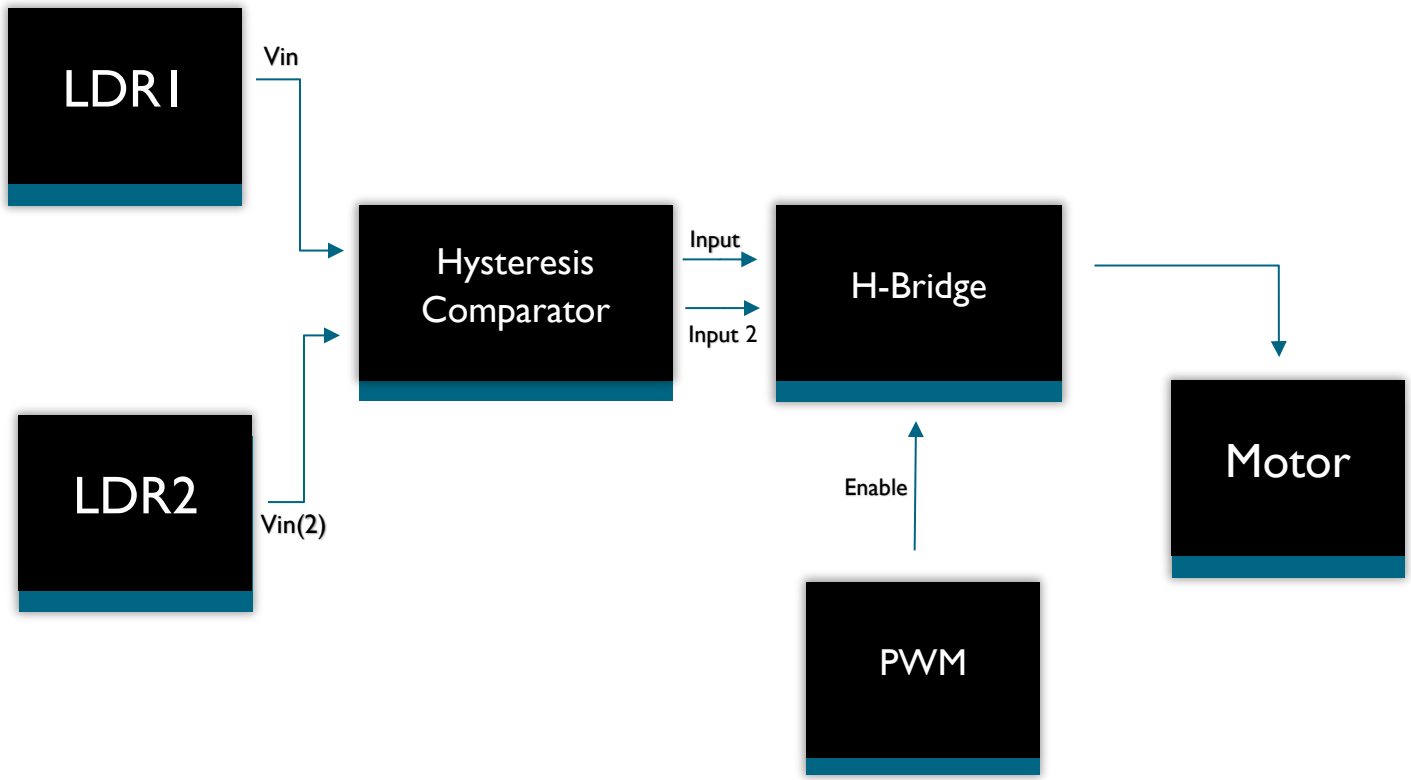

//COMPONENTS

The following circuits were ones used in the project, which we would dive into extensive detail on how they operate and their roles in the project.

- LDRs
- Hysteresis comparators.
- H-Bridge & Motor.
- PWM.
- Absolute & Control Voltage.

Starting with the LDRs,

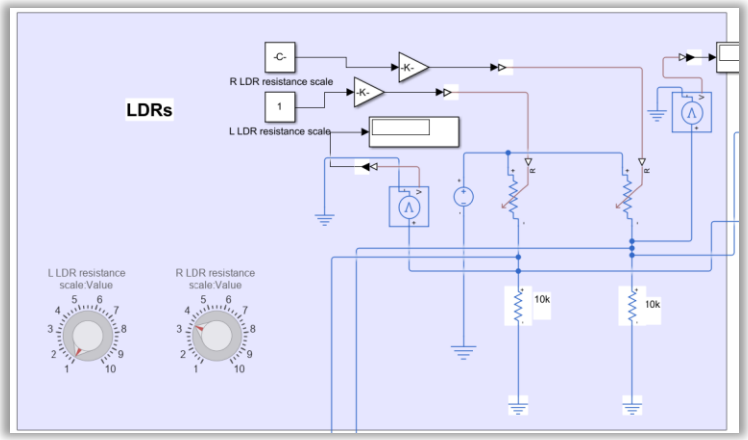

LDR CIRCUIT IN MATLAB

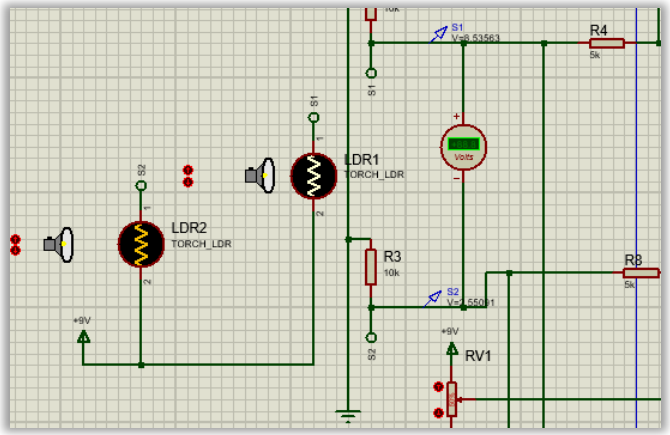

EQ. CIRCUIT IN PROTEUS

LDRs are used to measure the difference in light, in here the output of the LDRs is fed into the Hysteresis comparator, which poises them against a reference voltage set via a potentiometer to account for ambient light, in order to control the direction of the motion.

Moving on to the Hysteresis Comparators,

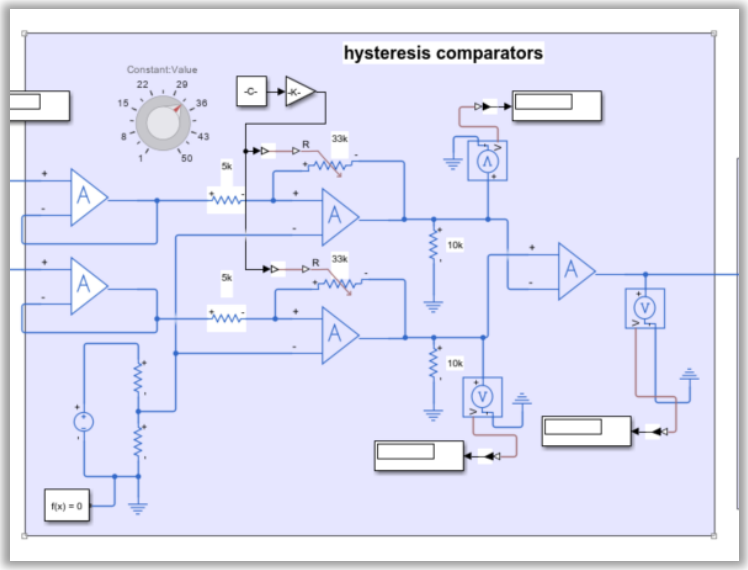

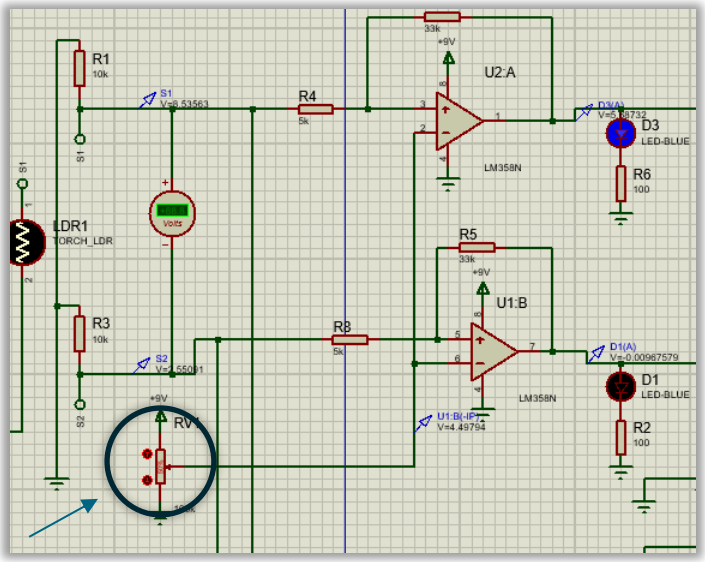

The hysteresis comparators here are used to compare the outputs of the two LDRs we installed earlier. The comparator puts the LDRs against a certain reference voltage we set via the potentiometer (for example 4.5V), this is pivotal as this way we adjust how sensitive our system is to light changes. You may have also noticed that **two** hysteresis comparators are in use. We opted to use them in this configuration to control the reference voltage, as well as the fact that the L298 IC requires two inputs.

Now heading onto the H-bridge,

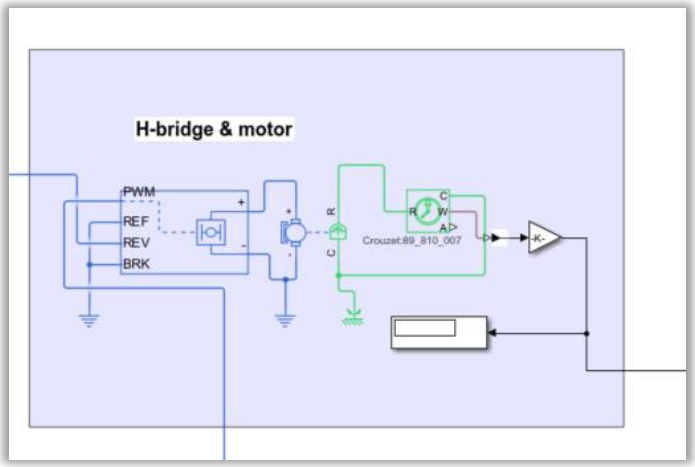

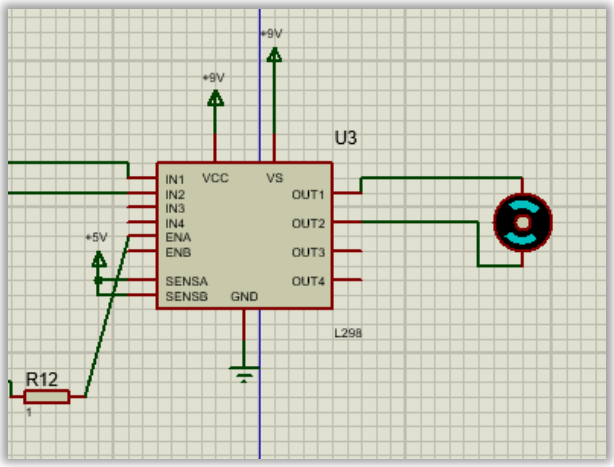

In here, the H-bridge IC (L298) is fed its two inputs from the comparators we installed and is fed as well our PWM.

ABSOLUTE & CONTROL VOLTAGE,

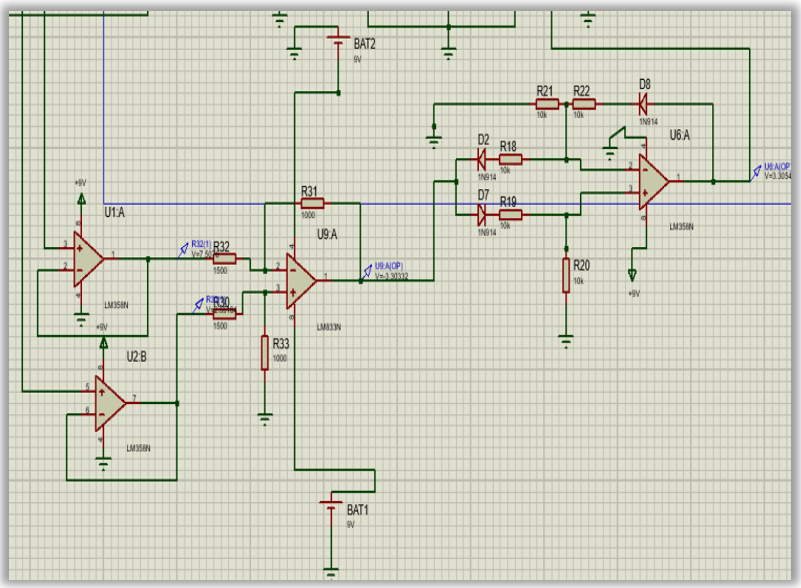

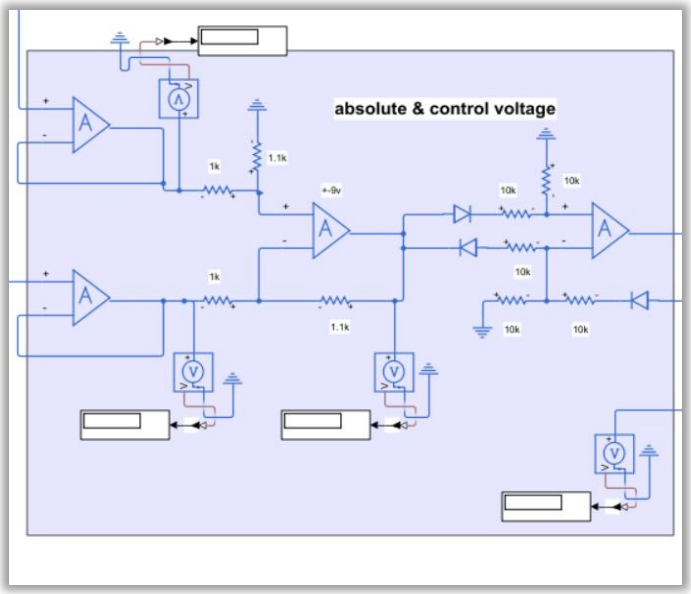

The absolute and control voltage circuit is crucial to our project, and it's composed of **two** parts. The first part is a differential amplifier that's fed its two inputs from the LDRs and multiplies their difference by a certain gain we set. The output of the differential amplifier is then fed to the absolute circuit, and as its name implies, it outputs the absolute value of the gain-multiplied difference outputted from the differential amplifier, that's then fed into the PWM, **which we would be delving into shortly…**

PWM,

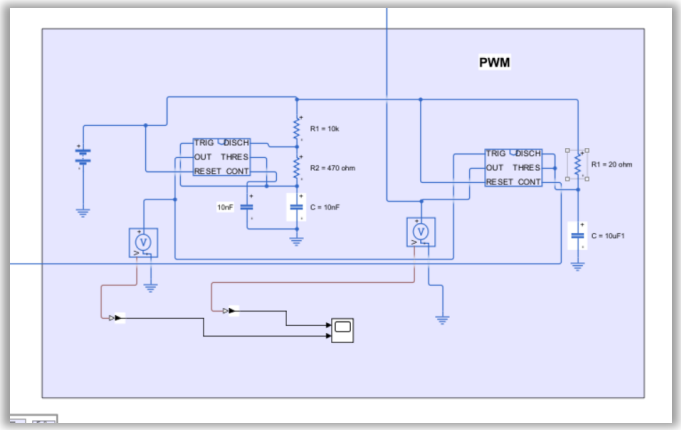

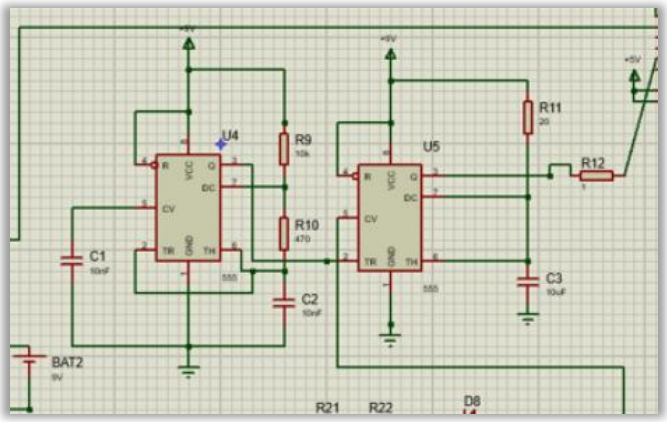

The PWM consists of **two** 555 timers, one being in monostable mode, and the other being in astable mode.

The one in the astable mode is responsible for the frequency generation. The monostable circuit is fed the output of the "Absolute & Voltage Control" circuit, which is responsible for the duty cycle —the period during which the output is high. The duty cycle directly influences the speed at which the motor operates.

//SIMULATION

In this section, we would delve into the details of our simulation, as well as a demonstration of the results we got.

Starting with the variable speed,

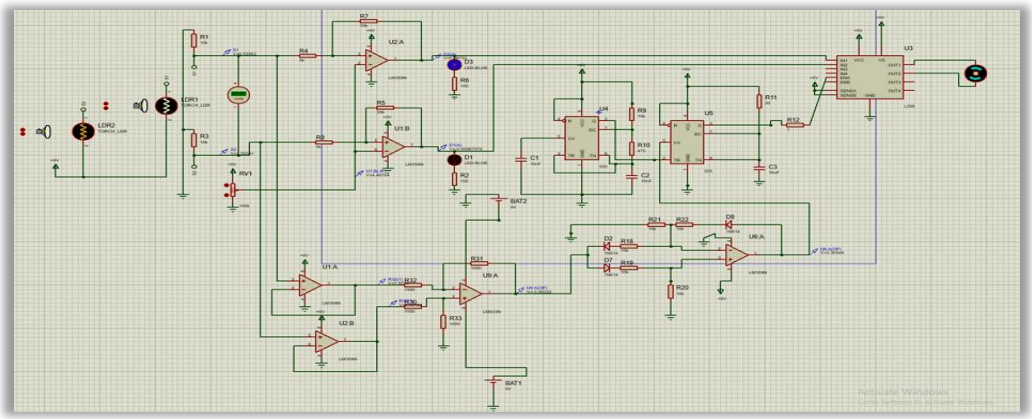

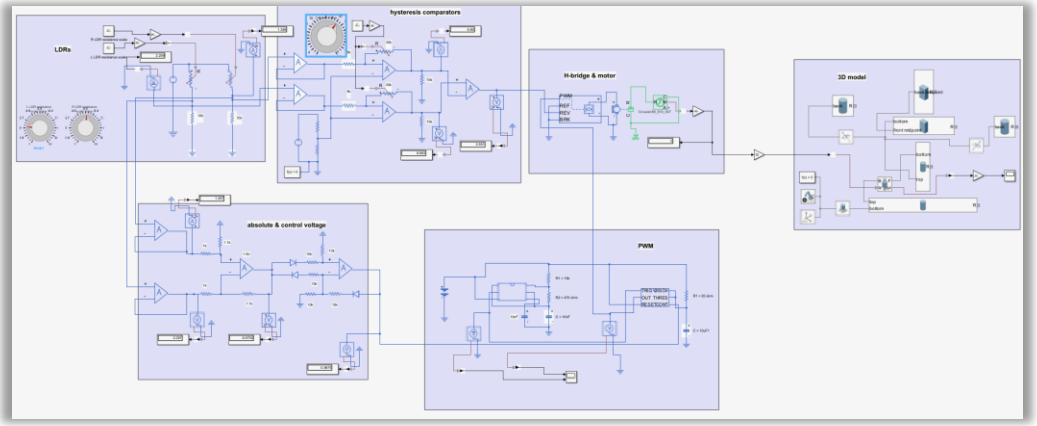

When L is slightly higher than R, the motor moves towards the light slowly.

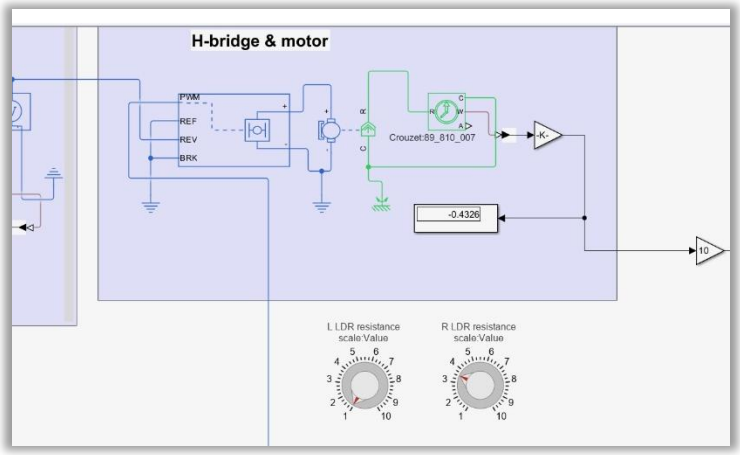

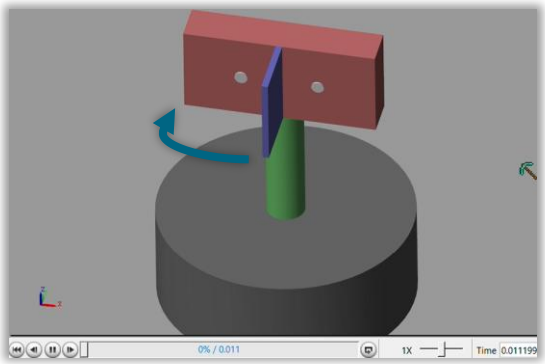

AFTER

A LITTLE WHILE

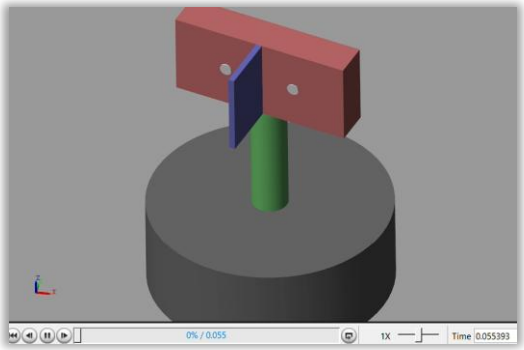

Duty cycle,

We can notice that the duty cycle is extremely small, owing to the small difference between the two LDRs.

When L is higher than R by a decent margin,

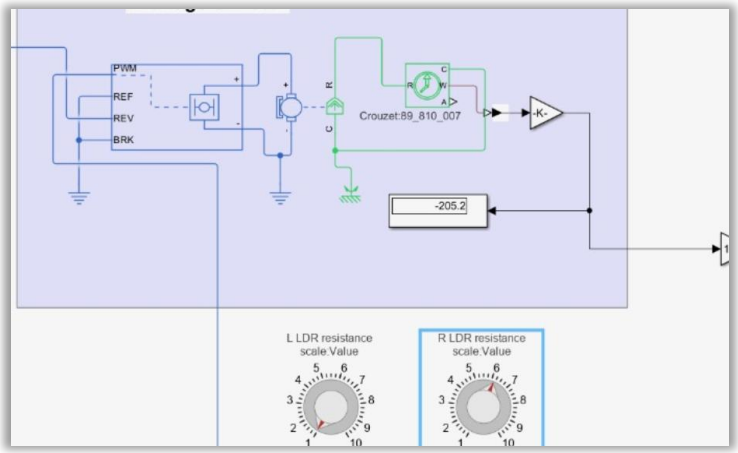

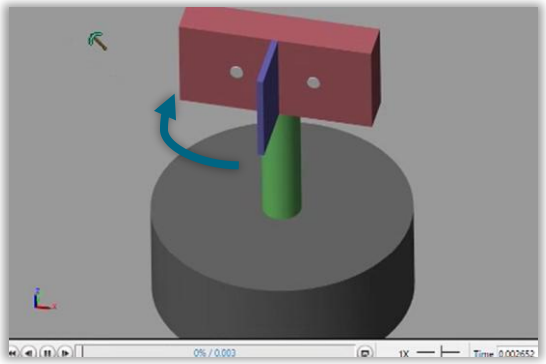

AFTER

A LITTLE WHILE

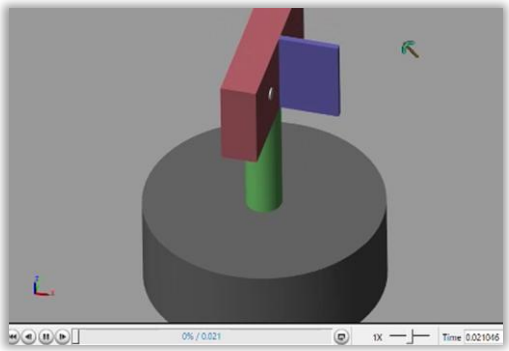

Duty cycle,

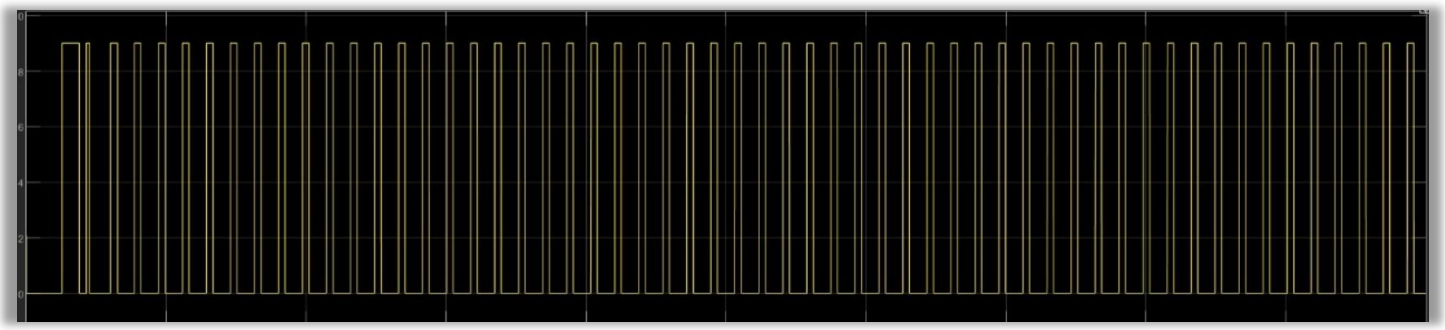

We can notice that the duty cycle has become more sizable, owing to the bigger difference between the two LDRs.

When L is significantly higher than R,

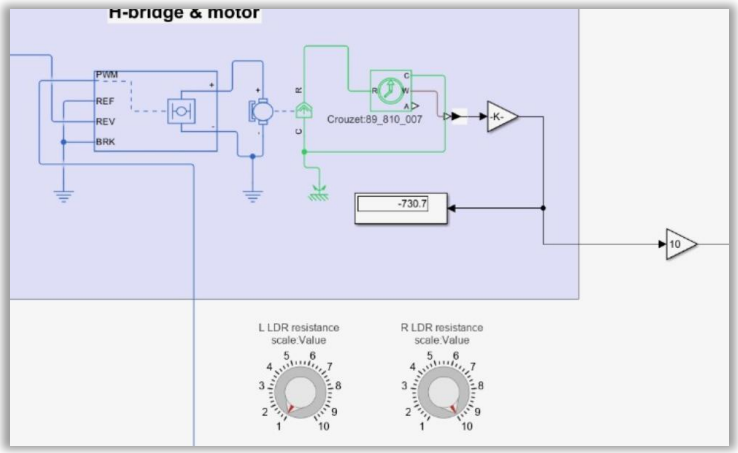

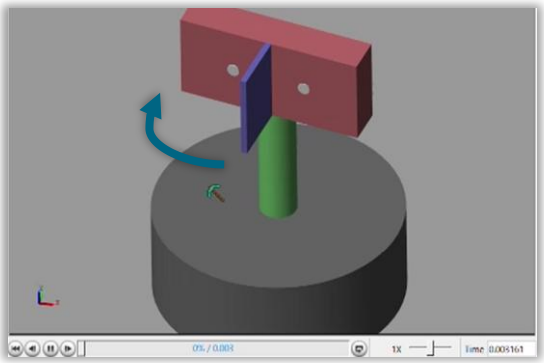

AFTER

A LITTLE WHILE

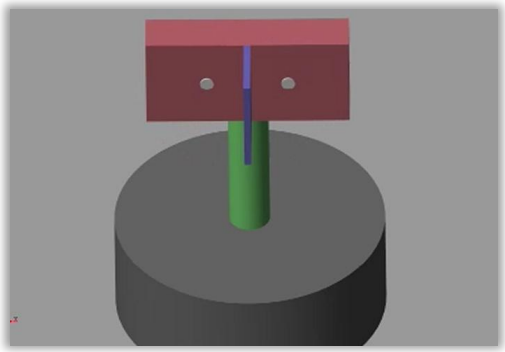

Duty cycle,

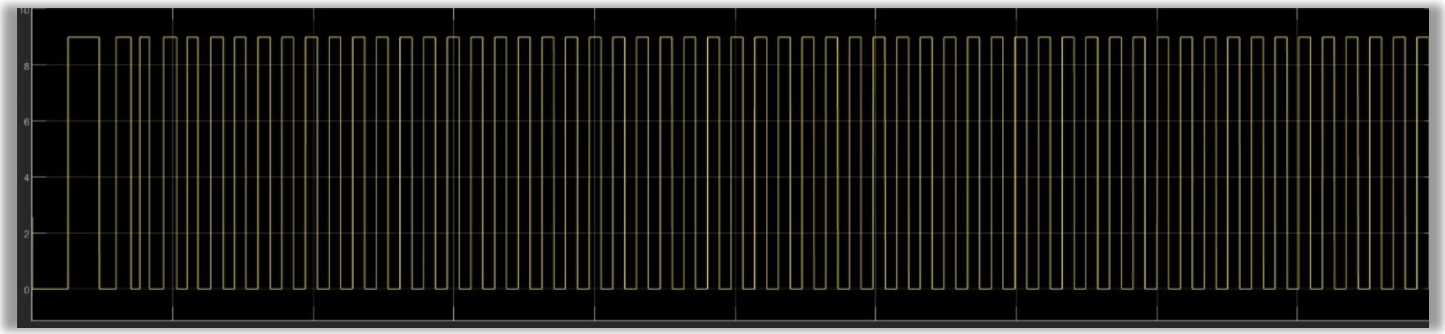

We can notice that the duty cycle has become almost one with the astable, owing to the difference between the two LDRs being extremely big.

For a better look please visit our drive link, [Drive Link]

Now as for the constant speed,

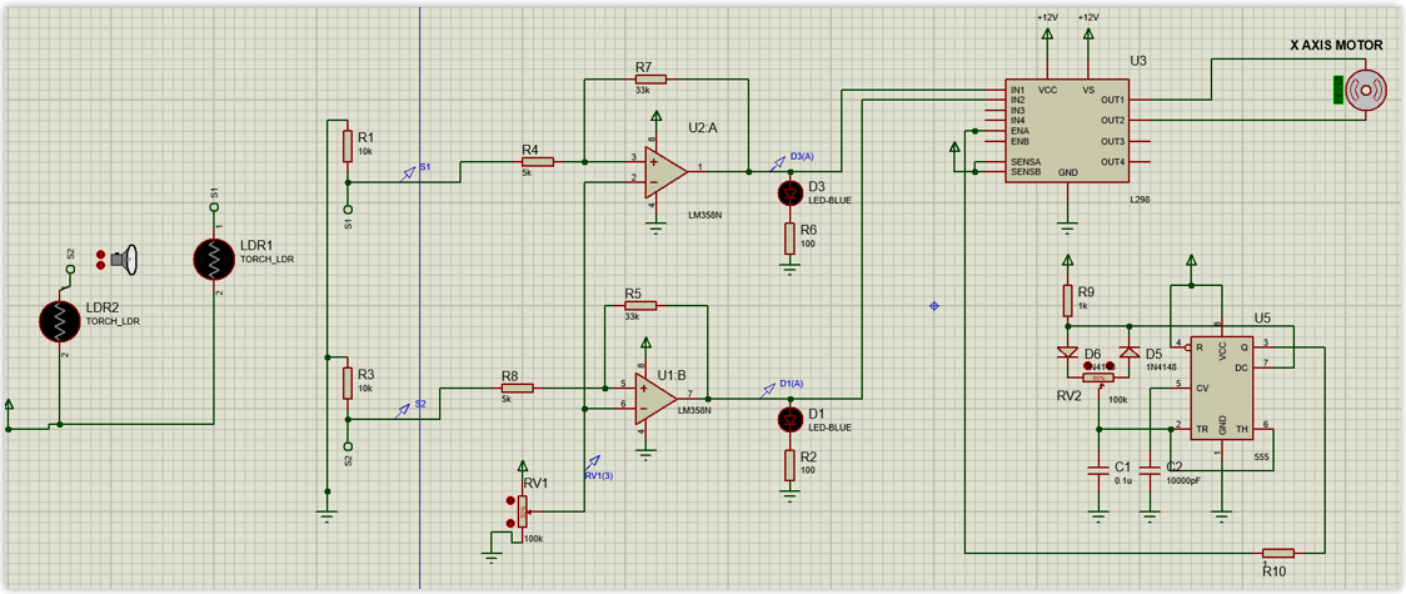

You can find active demonstration by clicking on the link here, [Drive Link].

Real World Tests,

No Light on LDRs,

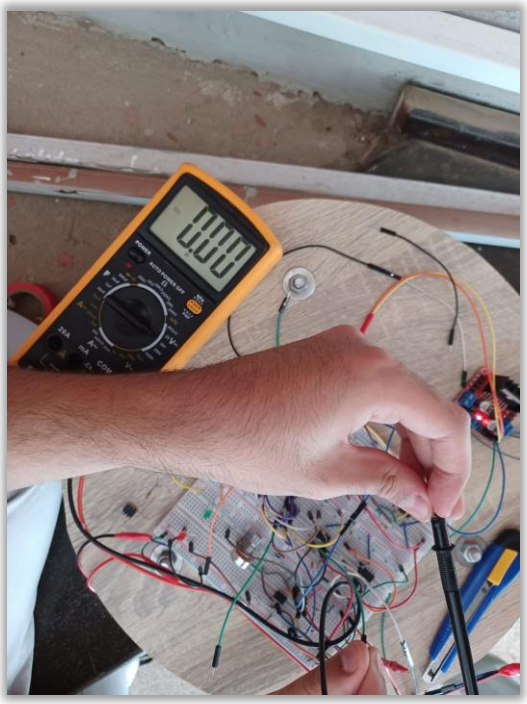

Mid-Light Diff on LDRs,

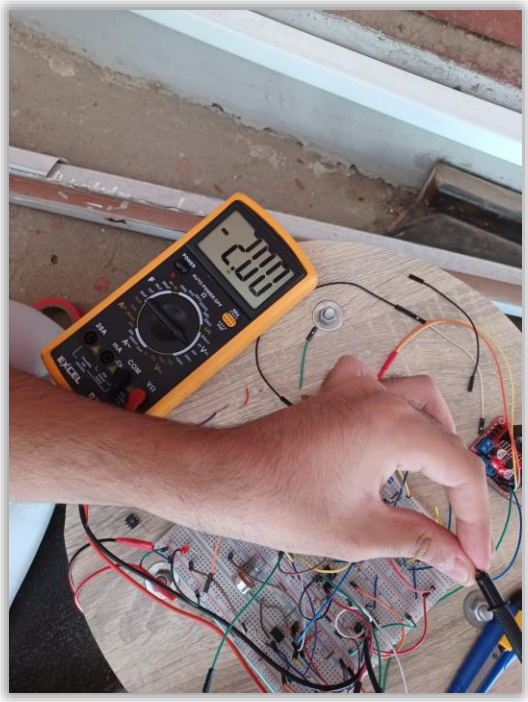

Showcasing motion (for a better view please visit our Drive),

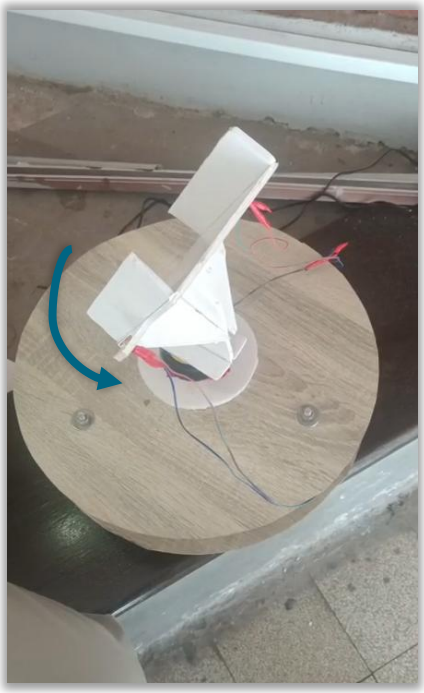

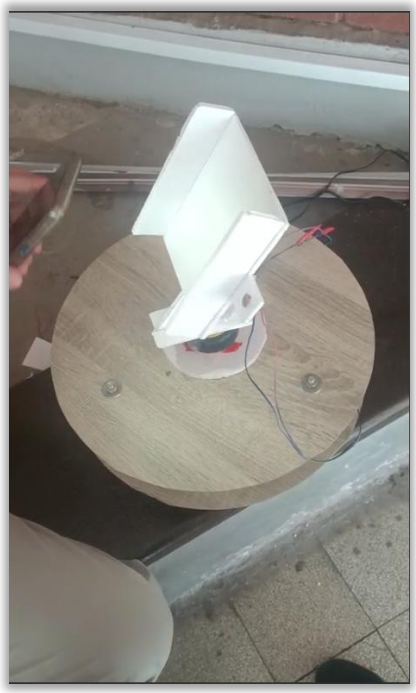

//CALCULATIONS

Hysteresis,

$$0.75(VH - VL) = 5 * \frac{33k}{5k}$$

$$Vl = (Vref - Vcc * \frac{R}{R + Rf}) * (1 + \frac{R}{Rf})$$

$$VH = Vcc * (\frac{R}{Rf})$$

LDR Voltage Divider,

$$V^{+} = 5 * \frac{10k}{R_{LDR} + 10k}$$

PWM,

$$\text{Let R1} = \text{R9} = 10\text{k}, \text{C} = \text{C2} = 10\text{nF}, R2 = R10 = 470Ohm$$

$$Thigh = 0.693 \times (R1 + R2) \times C = 0.693\ (10k + 470) * 10nF\ = 7.25 * (10)^{-5}s$$

$$Tlow = 0.693\ \times R2 \times C = 0.693\ \times (10)^{-8} \times 470 = 3.26 * (10)^{-6}s$$

$$f = \frac{1}{T} = \frac{1}{7.58 * (10)^{-5}}$$

$$D = \frac{Thigh}{T} \times 100\% = 7.25 \times \frac{(10)^{-5}}{7.58} \times (10)^{-5} \times 100\% \approx 95.6\%$$

//CONCLUSION

In conclusion, the solar tracker project has underscored the importance of optimizing solar panel orientation to enhance energy efficiency. By integrating precise tracking systems and advanced control algorithms, the project effectively addressed the challenge of maximizing solar energy capture. The implemented tracking system demonstrated a significant improvement in energy output compared to fixed-position panels, thereby enhancing both the economic feasibility and sustainability of solar energy applications.