VE COMMERCIAL VEHICLES LIMITED.
(UNIT:EICHER ENGINEERING COMPONENTS;DEWAS)UNIT:–II

CONTROL PLAN

PREV. OPN.	NEXT. OPN.	SURFACE FINISH :	DOC. NO. :
60 - PRE HT INSPECTION	80 - TEETH CHAMFERING		APO4 : 160 : 20

CONTROL PLAN NO : *2439 / 70*

LOCATION → REST →→ CLAMP —N→ SPL.CHAR. (CRITICAL DIMN.) ◇B EECD ◇ CUSTOMER.

REVISION: A B C / D E F

EFF DATE	22.08.2014	EFF DATE	03.01.2015	EFF DATE	16.12.15
PROTOTYPE	✓	PRELAUNCH	✓	PRODN	✓
O.E.	✓	EXPORT			

PART NO.	***ED 2439 (574238)***		
PART NAME	***GEAR, 2ND DRIVE***	OPN. NO.	***70*** △A
CUSTOMER	***ROYAL ENFIELD***		
OPERATION	***✱ HEAT - TREATMENT***		

CELL [OPTIONAL]	M./C.	M / C NO. [OPTIONAL]
	S.Q.F.	

FIXTURE	FIX. NO.	TOOL	NO.

MATERIAL - : 16MnCr5
COMP. WT - : 0.149 Kg.

✱ HEAT-TREATMENT- :

✳ MARKING ;
PRE-WASHING ;
PRE-HEATING ;
CARBURISING ;
HARDENING ;
POST-WASHING ;
TEETH CHAMFERING ;
SHOT BLASTING ;

FOR REFERENCE ONLY

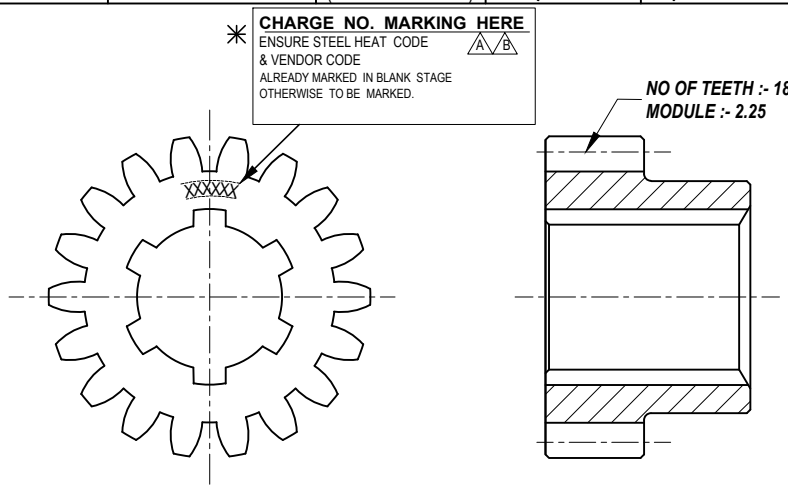

SURFACE HARDNESS	CORE HARDNESS	EFFECTIVE CASE DEPTH	MICROSTRUCTURE	
ALL AREA	AT RCD (MIDDLE OF TEETH)	AT PCD	CASE	CORE
80 ~ 83 HRA	300 ~ 450 HV1	0.6 ~ 0.9 mm CUT OFF 513 HV1	FINE TEMPERED MARTENSITE + RA <10% AND FREE FROM CARBIDES GBO<20 micron	LOW CARBON MARTENSITE + BAINITE

SR. NO.	CHARACTERISTICS PRODUCT	CHARACTERISTICS PROCESS	SPL CHAR CLASS	PRODUCT SPECIFICATIONS	EVALUATION MEASUREMENT TECHNIQUE INSTRUMENT	NO.	SAMPLING SIZE	SAMPLING FREQ	CONTROL METHOD	CORRECTIVE ACTION / REACTION PLAN
1.	***EFF. CASE DEPTH***		◇B	***REFER ABOVE TABLE***	*MICRO-HARDNESS TESTER*	---	*1 PC*	*PER CHARGE*	*TESTING*	*CHECK FURNACE SETTING DATA & CONFIRM FOR CORRECTNESS*
2.	***SURFACE HARDNESS***		◇B		*HARDNESS TESTER*	---	*1 PC*	*PER CHARGE*		
3.	*CORE HARDNESS*		◇B			---	*1 PC*	*PER CHARGE*		
4.	*MICROSTRUCTURE*				*MICROSCOPE*	---	*1 PC*	*PER CHARGE*		
						---	*1 PC*	*PER CHARGE*		
5.	*SHOT BLAST*			*FREE FROM RUST & SCALE*	*VISUAL*	---	*100%*			

A	B	C
△A OPN. NO. 70 WAS 80 & ADDED MARKING, CHANGE AS PER LATEST OPN. SEQUENCE SHEET. M.W. 22.04.15	△B REMOVED PART NO. MARKING AS PER REVISED BLANK DRG. REV-C (M.W. 25.07.15)	△C TEMPERING TEMPRATURE RELATED NOTE, REMOVED AS PER CUST'S LATEST DRG REV.(B), MUKESH (19.12.15)

DRN BY	*MUKESH*	CHKD BY	*R. PATHAK*	APRD BY	*B.LEVA*	PAGE 01 / 02

UNSPECIFIED TOLERANCES AS PER IS : 2102 (PART-1) : 1993 MEDIUM CLASS. | *ALL DIMENSIONS ARE IN MILLIMETERS.* | *DO NOT SCALE, IF IN DOUBT, PLEASE ASK.* | *BREAK SHARP CORNERS.*