PROJECT NAME : P-1

VE COMMERCIAL VEHICLES LIMITED.
(UNIT:EICHER ENGINEERING COMPONENTS;DEWAS)UNIT:–II

CONTROL PLAN

PREV. OPN.	NEXT. OPN.	SURFACE FINISH :	DOC. NO. :
110 - PRE HT INSPECTION	130-TEETH DEBURRING		APO4 : 160 : 20 REV-01 (DATE-05.10.17)

CONTROL PLAN NO : *2462 / 120*

KEY CONTACT PERSON :- S. KOMULWAD

CORE TEAM :- SK, LEVA, SRS, IDS, MM, KUNAL, MJ, VSG

REVISION: A1 / A2 / C

EFF DATE	16.09.2016	EFF DATE	11.09.17	EFF DATE	
PROTOTYPE	✓	PRELAUNCH	✓	PRODN	
O.E.	✓	EXPORT			

LOCATION → REST → CLAMP —N→ SPL.CHAR. (CRITICAL DIMN.) ◇B EECD ◇ CUSTOMER.

PART NO.	***ED 2462 (575420 / c)***
PART NAME	***GEAR, 3rd & 4th DRIVE*** — OPN. NO. ***120***
CUSTOMER	***ROYAL ENFIELD***
OPERATION	***✱ HEAT - TREATMENT***

CELL [OPTIONAL]	M./C.	M / C NO. [OPTIONAL]
	S.Q.F.	

FIXTURE	FIX. NO.	TOOL	NO.

MATERIAL - : SAE 8620H (A2)

COMP. WT - : 0.42 Kg.

✱ HEAT-TREATMENT- :

✳ MARKING ;
PRE-WASHING ;
PRE-HEATING ;
CARBURISING ;
HARDENING ;
POST-WASHING ;
TEMPERING ;
SHOT BLASTING ;
TEETH DEBURRING
(REFER SEP. CONTROL PLAN);

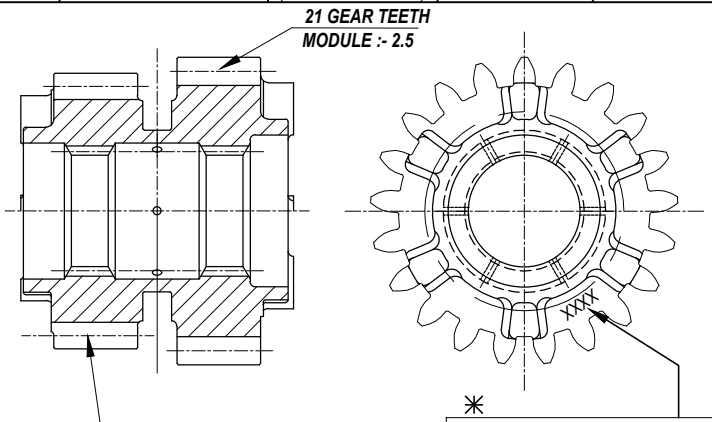

CHARGE NO. MARKING HERE
ENSURE STEEL HEAT CODE,
PART NO. ' 575420 ' & VENDOR CODE
ALREADY MARKED IN BLANK STAGE
OTHERWISE TO BE MARKED

SURFACE HARDNESS	CORE HARDNESS	EFFECTIVE CASE DEPTH	MICROSTRUCTURE	
ALL AREA	@ RCD (MIDDLE OF TEETH)	@ PCD	CASE	CORE
80-84 HRA (A1)	330-480 HV1 (A1)	0.6-0.9 mm CUT OFF 513 HV1	FINE TEMPERED MARTENSITE + RA <10% AND FREE FROM CARBIDES GBO<20 micron, 5%CARBIDE IN GLOBULE FORM ALLOWED	LOW CARBON MARTENSITE + BAINITE

SR. NO.	CHARACTERISTICS PRODUCT	CHARACTERISTICS PROCESS	SPL CHAR CLASS	PRODUCT SPECIFICATIONS	EVALUATION MEASUREMENT TECHNIQUE INSTRUMENT	NO.	SAMPLING SIZE	SAMPLING FREQ	RESP.	CONTROL METHOD	CORRECTIVE ACTION / REACTION PLAN
1.	EFF. CASE DEPTH		◇	REFER ABOVE TABLE	MICRO-HARDNESS TESTER	---	1 PC	PER CHARGE	~ INSPTR.	TESTING	CHECK FURNACE SETTING DATA & CONFIRM FOR CORRECTNESS
2.	SURFACE HARDNESS				HARDNESS TESTER	---	5 PC	PER CHARGE	~ INSPTR.		
3.	CORE HARDNESS					---	1 PC	PER CHARGE	~ INSPTR.		
4.	MICROSTRUCTURE				MICROSCOPE	---	1 PC	PER CHARGE	~ INSPTR.		
						---	1 PC	PER CHARGE	~ INSPTR.		
5.	SHOT BLAST			FREE FROM RUST & SCALE	VISUAL	---	100%	PER CHARGE	~ INSPTR.		

FOR REFERENCE ONLY

A1 SURFACE HARDNESS 80-84 HRA WAS 80-83 HRA & CORE HARDNESS 330-480 HV1 WAS 300-450 HV1 AS PER CUSTOMER'S LATEST DRAWING REV.b BY-VSG, DT-24.07.17

A2 MATERIAL SCM 420 REMOVED REVISED AS PER CUST'S LATEST DRG. REV.-c. BY-VSG, DT-13.12.17.

DRN BY	VIJAY S GIRI	CHKD BY	R.PATHAK	APRD BY	B.LEVA	PAGE 01 / 02

UNSPECIFIED TOLERANCES AS PER IS : 2102 (PART-1) : 1993 MEDIUM CLASS. | ALL DIMENSIONS ARE IN MILLIMETERS. | DO NOT SCALE, IF IN DOUBT, PLEASE ASK. | BREAK SHARP CORNERS.