VE COMMERCIAL VEHICLES LIMITED.
(UNIT:EICHER ENGINEERING COMPONENTS;DEWAS)UNIT:–II

CONTROL PLAN

PREV. OPN.	NEXT. OPN.	SURFACE FINISH :	DOC. NO. :
60 - PRE HT INSPECTION	72 / 75 - RECEIPT QUALITY INSP. / GRATOMAT		APO4 : 160 : 20

CONTROL PLAN NO : *2465 / 70*

LOCATION → REST →→ CLAMP —N→ SPL.CHAR. (CRITICAL DIMN.) Ⓑ EECD ◇ CUSTOMER. REVISION

EFF DATE	25.08.14	EFF DATE	04.01.15	EFF DATE	08.01.16
PROTOTYPE	✓	PRELAUNCH	✓	PRODN	✓
O.E.	✓	EXPORT			

PART NO.	***ED 2465 (574102)***		
PART NAME	***GEAR COMP, STATER CLUTCH***	OPN. NO.	***70***
CUSTOMER	***ROYAL ENFIELD***		
OPERATION	***✱ HEAT - TREATMENT***		

CELL [OPTIONAL]	M./C.	M / C NO. [OPTIONAL]
	S.Q.F.	

FIXTURE	FIX. NO.	TOOL	NO.

MATERIAL - : SCM420H
COMP. WT - : 0.806 Kg.

✱ HEAT-TREATMENT- :

✳ MARKING ;
PRE-WASHING ;
PRE-HEATING ;
CARBURISING ;
HARDENING ;
POST-WASHING ;
△A SUB ZERO TREATMENT ; ✱
SHOT BLASTING ;

△A ***NEXT OPN. :- TEETH CHAMFERING (NOT APPLICABLE FOR OUTSOURCE SUPPLIERS).***

✳ **CHARGE NO. MARKING HERE**
ENSURE STEEL HEAT CODE △A△C & VENDOR CODE
ALREADY MARKED IN BLANK STAGE
OTHERWISE TO BE MARKED

NO OF TEETH :- 73
MODULE :- 2.0

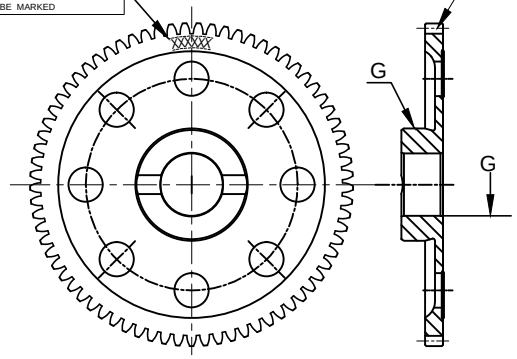

GROUND SURFACE - BORE & OD AS MENTIONED WITH 'G'

SURFACE HARDNESS	CORE HARDNESS	EFFECTIVE CASE DEPTH	MICROSTRUCTURE	
ALL AREA	AT RCD	AT PCD	CASE	CORE
60-64 HRC △A	300 - 450 HV1 △B △A	0.8~1.1 mm CUT OFF 550 HV1 △A	FINE TEMPERED MARTENSITE + RA <5% ✱ AND FREE FROM CARBIDES GBO<20 micron	LOW CARBON MARTENSITE + BAINITE

NOTE:- 1) GROUND SURFACE - BORE & BOSS OD HARDNESS @ 0.1mm 700 HV1 MIN

△A✱ ***SUBZERO TREATMENT TO BE DONE AFTER POST WASHING WITHIN 2 Hrs.***

SR. NO.	CHARACTERISTICS PRODUCT	CHARACTERISTICS PROCESS	SPL CHAR CLASS	PRODUCT SPECIFICATIONS	EVALUATION MEASUREMENT TECHNIQUE INSTRUMENT	NO.	SAMPLING SIZE	SAMPLING FREQ	CONTROL METHOD	CORRECTIVE ACTION / REACTION PLAN
1.	*EFF. CASE DEPTH*		◇	*REFER ABOVE TABLE*	*MICRO-HARDNESS TESTER*	---	*1 PC*	*PER CHARGE*	*TESTING*	*CHECK FURNACE SETTING DATA & CONFIRM FOR CORRECTNESS*
2.	*SURFACE HARDNESS*				*HARDNESS TESTER*	---	*1 PC*	*PER CHARGE*		
3.	*CORE HARDNESS*					---	*1 PC*	*PER CHARGE*		
4.	*MICROSTRUCTURE*				*MICROSCOPE*	---	*1 PC*	*PER CHARGE*		
						---	*1 PC*	*PER CHARGE*		
5.	*SHOT BLAST*			*FREE FROM RUST & SCALES*	*VISUAL*	---	*100%*			

FOR REFERENCE ONLY

REV.	
A	***MATERIAL SCM420H WAS 16MnCr5. SRF HARD,CORE HARD & ECD REVISED. ALSO SUBZERO TREATMENT NOTE ADDED.REVISED AS PER CUST'S LATEST DRG (REV.d1), DATE (13.04.2015)MUKESH***
B	***CORE HARDNESS 300 - 450 WAS 350-480. CHANGED AS PER CUST'S LATEST PART DRG. REV-d, M.W. - 06.06.15***
C	REMOVED PART NO. MARKING, AS PER REVISED BLANK DRG. REV-F (M.W. 29.07.15)
D	***CP. REVISED - SUBZERO TREATMENT ADDED IN HT SEQUENCE ALONG WITH A NOTE✱(TIME LAG). TEETH CHAF. OPN SEPERATED FROM SUPPLIER'S SCOPE.EXTRA INSPECTION LOCATION (X & Y) FOR CORE HARDNESS REMOVED (AS PER RECENT DISCUSSION WITH CUST.), (MUKESH - 12.10.15)***
E	TEMPERING TEMPRATURE RELATED NOTE, REMOVED AS PER CUST'S LATEST PART DRG REV. (e). (MUKESH 21.12.15)

DRN BY	*MUKESH*	CHKD BY	*R.PATHAK*	APRD BY	*B.LEVA*	PAGE 01 / 02

UNSPECIFIED TOLERANCES AS PER IS : 2102 (PART-1) : 1993 MEDIUM CLASS. | *ALL DIMENSIONS ARE IN MILLIMETERS.* | *DO NOT SCALE, IF IN DOUBT, PLEASE ASK.* | *BREAK SHARP CORNERS.*