VE COMMERCIAL VEHICLES LIMITED.
(UNIT:EICHER ENGINEERING COMPONENTS;DEWAS)UNIT:–II

CONTROL PLAN

PREV. OPN.	NEXT. OPN.	SURFACE FINISH :	DOC. NO. :
70 - PRE HT INSPECTION	90-AFTER HT INSPECTION (B)		AP04 : 160 : 20

CONTROL PLAN NO : 2454 / 080

LOCATION → | REST →→ | CLAMP —N→ | SPL.CHAR. (CRITICAL DIMN.) | (B) EECD | ◇ CUSTOMER. | REVISION

EFF DATE	26.08.2014	EFF DATE	03.01.15	EFF DATE	22.12.15
PROTOTYPE	✓	PRELAUNCH	✓	PRODN	✓
O.E.	✓	EXPORT			

PART NO.	ED 2454 (574253/c)		
PART NAME	GEAR, 5th DRIVEN	OPN. NO.	080
CUSTOMER	ROYAL ENFIELD		
OPERATION	* HEAT - TREATMENT		

CELL [OPTIONAL]	M./C.	M / C NO. [OPTIONAL]
	S.Q.F.	

FIXTURE	FIX. NO.	TOOL	NO.

MATERIAL - : 16MnCr5
COMP. WT - : 0.24 Kg.

*** HEAT-TREATMENT- :**

MARKING ;
PRE-WASHING ;
PRE-HEATING ;
CARBURISING ;
HARDENING ;
POST-WASHING ;
SHOT BLASTING ;

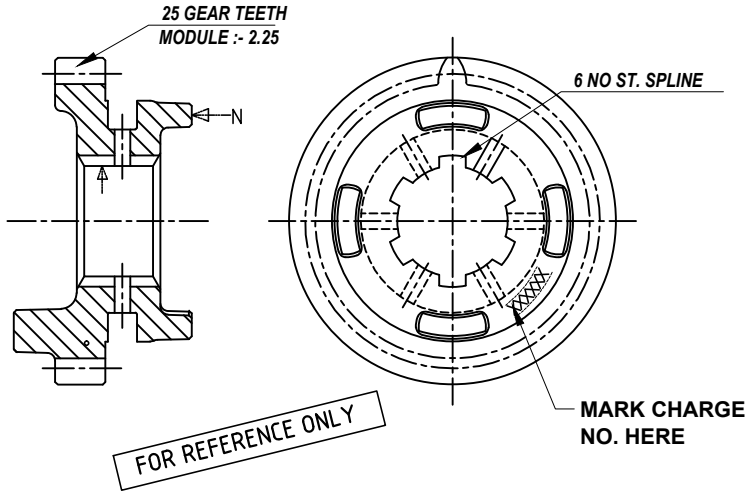

SURFACE HARDNESS	CORE HARDNESS	EFFECTIVE CASE DEPTH	MICROSTRUCTURE	
ALL AREA	@ RCD (MIDDLE OF TEETH)	@ PCD	CASE	CORE
80-83 HRA	300-450 HV1	0.6-0.9 mm CUT OFF 513 HV1	FINE TEMPERED MARTENSITE + RA <10% AND FREE FROM CARBIDES GBO<20 micron ,5% CARBIDE GLOBULE FORM IN ALLOWED.	LOW CARBON MARTENSITE + BAINITE 10% FERRITE / FERRITIC PRODUCTS ALLOWED.

SR. NO.	CHARACTERISTICS PRODUCT	CHARACTERISTICS PROCESS	SPL CHAR CLASS	PRODUCT SPECIFICATIONS	EVALUATION MEASUREMENT TECHNIQUE INSTRUMENT	NO.	SAMPLING SIZE	SAMPLING FREQ	CONTROL METHOD	CORRECTIVE ACTION / REACTION PLAN
1.	EFF. CASE DEPTH		(B)	REFER ABOVE TABLE	MICRO-HARDNESS TESTER	---	1 PC	PER CHARGE	TESTING	CHECK FURNACE SETTING DATA & CONFIRM FOR CORRECTNESS
2.	SURFACE HARDNESS		(B)		HARDNESS TESTER	---	1 PC	PER CHARGE		
3.	CORE HARDNESS					---	1 PC	PER CHARGE		
4.	MICROSTRUCTURE				MICROSCOPE	---	1 PC	PER CHARGE		
						---	1 PC	PER CHARGE		
5.	SHOT BLAST			FREE FROM RUST & SCALE	VISUAL	---	100%			

REVISION	
A	TEMPERING TEMPRATURE RELATED NOTE. REMOVED AS PER CUST'S LATEST PART DRG REV. (I). (MUKESH 21.12.15)
B	TEETH CHAMFERING (GRATOMAT) OPN NO-85 ELIMINATED AS PER DCR NO: 951 DT.- 23.03.17 (VS GIRI, DATE-23.03.17)
C	

DRN BY	MUKESH	CHKD BY	R.PATHAK	APRD BY	B.LEVA	PAGE 01 / 02

UNSPECIFIED TOLERANCES AS PER IS : 2102 (PART-1) : 1993 MEDIUM CLASS. | ALL DIMENSIONS ARE IN MILLIMETERS. | DO NOT SCALE, IF IN DOUBT, PLEASE ASK. | BREAK SHARP CORNERS.