VE COMMERCIAL VEHICLES LIMITED.
(UNIT:EICHER ENGINEERING COMPONENTS;DEWAS)UNIT:-II

CONTROL PLAN

PREV. OPN.	NEXT. OPN.	SURFACE FINISH :	DOC. NO. :
50 - PRE HT INSPECTION	70 - TEETH CHAMFERING		APO4 : 160 : 20

CONTROL PLAN NO : **ED 2476 / 60**

LOCATION → REST →→ CLAMP —N→ SPL.CHAR. (CRITICAL DIMN.) ◇B EECD ◇ CUSTOMER.

REVISION: A B C

EFF DATE	03.10.15	EFF DATE	03.10.15	EFF DATE	08.01.16
PROTOTYPE	✓	PRELAUNCH	✓	PRODN	✓

O.E.		EXPORT	

PART NO.	**ED 2476 (574614)**		
PART NAME	***GEAR, 1ST DRIVEN***	OPN. NO.	***60***
CUSTOMER	***ROYAL ENFIELD***		
OPERATION	***✱ HEAT - TREATMENT***		

CELL [OPTIONAL]	M./C.	M / C NO. [OPTIONAL]
	S.Q.F.	

FIXTURE	FIX. NO.	TOOL	NO.

MATERIAL - : 16MnCr5
COMP. WT - : 0.313 Kg.

✱ HEAT-TREATMENT- :
✳ MARKING ;
PRE-WASHING ;
PRE-HEATING ;
CARBURISING ;
HARDENING ;
POST-WASHING ;
TEETH CHAMFERING ;
SHOT BLASTING ;

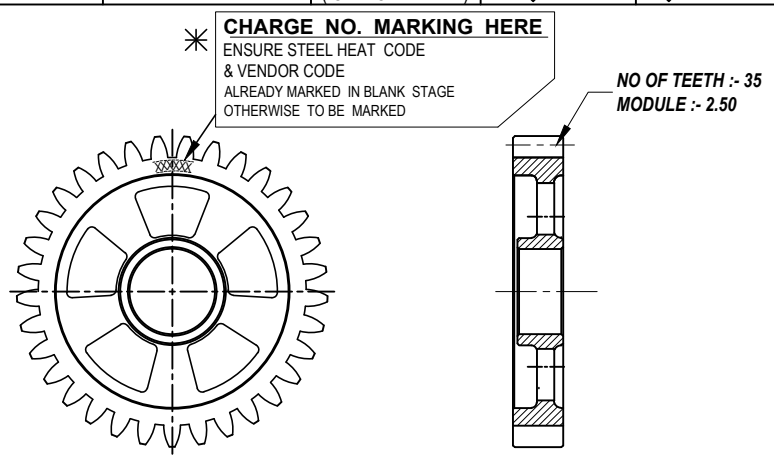

SURFACE HARDNESS	CORE HARDNESS	EFFECTIVE CASE DEPTH	MICROSTRUCTURE	
ALL AREA	***AT RCD (MIDDLE OF TEETH)***	***AT PCD***	***CASE***	***CORE***
80-83 HRA	***300-450 HV1***	***0.6-0.9 mm CUT OFF 513 HV1***	***FINE TEMPERED MARTENSITE + RA <10% AND FREE FROM CARBIDES GBO<20 micron 5% CARBIDE IN GLOBULE FORMIN ALLOWED.***	***LOW CARBON MARTENSITE + BAINITE 10% FERRITE / FERRITIC PRODUCTS ALLOWED.***

NOTE:- 1) GROUND SURFACE : HARDNESS @ 0.1mm SHALL BE 650 HV MIN.

A TEMPERING TEMPRATURE RELATED NOTE, REMOVED AS PER CUST'S LATEST PART DRG REV. (b). (MUKESH 21.12.15)

SR. NO.	CHARACTERISTICS PRODUCT	CHARACTERISTICS PROCESS	SPL CHAR CLASS	PRODUCT SPECIFICATIONS	EVALUATION MEASUREMENT TECHNIQUE INSTRUMENT	NO.	SAMPLING SIZE	SAMPLING FREQ	CONTROL METHOD	CORRECTIVE ACTION / REACTION PLAN
1.	***EFF. CASE DEPTH***		◇	***REFER ABOVE TABLE***	*MICRO-HARDNESS TESTER*	---	*1 PC*	*PER CHARGE*	*TESTING*	*CHECK FURNACE SETTING DATA & CONFIRM FOR CORRECTNESS*
2.	***SURFACE HARDNESS***				*HARDNESS TESTER*	---	*1 PC*	*PER CHARGE*		
3.	*CORE HARDNESS*					---	*1 PC*	*PER CHARGE*		
4.	*MICROSTRUCTURE*				*MICROSCOPE*	---	*1 PC*	*PER CHARGE*		
						---	*1 PC*	*PER CHARGE*		
5.	*SHOT BLAST*			*FREE FROM RUST & SCALE*	*VISUAL*	---	*100%*			

FOR REFERENCE ONLY

DRN BY	*Mukesh.*		CHKD BY	*R. PATHAK*		APRD BY	*B.LEVA*		PAGE 01 / 02

UNSPECIFIED TOLERANCES AS PER IS : 2102 (PART-1) : 1993 MEDIUM CLASS. | *ALL DIMENSIONS ARE IN MILLIMETERS.* | *DO NOT SCALE, IF IN DOUBT, PLEASE ASK.* | *BREAK SHARP CORNERS.*