VE COMMERCIAL VEHICLES LIMITED.
(UNIT : EICHER ENGINEERING COMPONENTS; DEWAS)

CONTROL PLAN

SURFACE FINISH :

DOC. NO. : APO4 : 160 : 20

CONTROL PLAN NO : *7048M / 110*

LOCATION → | REST →→→ | CLAMP —N→ | SPL.CHAR. (CRITICAL DIMN.) | B EECD | CUSTOMER`S | REVISION

EFF DATE		EFF DATE		EFF DATE	*11.11.13*
PROTOTYPE		PRELAUNCH		PRODN	✓

O.E.	✓	EXPORT	
PART NO.	***ED 7048M*** *(IA 223266)*		
PART NAME	***PINION, FD - HCV (6.166 RATIO)***	OPN. NO.	***110***
CUSTOMER	***V. E.C.V. L PITHAMPUR***		
OPERATION	***✱ HEAT TREATMENT***		

CELL [OPTIONAL]	M./C.	M / C NO. [OPTIONAL]
	CGCF & SHOT BLASTING	--

FIXTURE	FIX. NO.	TOOL	NO.

MATERIAL : En353
MODULE : 10.676
WEIGHT : 5.6

✱ HEAT TREATMENT
PUNCHING ;
PRE-WASHING ;
PRE-HEATING ;
HEATING ;
CARBURISING ;
OIL QUENCHING ;
POST-WASHING ;
TEMPERING ;
SHOT BLASTING ;

PL. NOTE : -
THIS PART REQUIRES **SHOT PEENING** AFTER SHOT BLASTING.

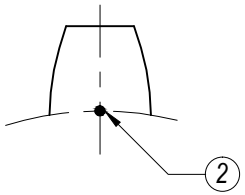

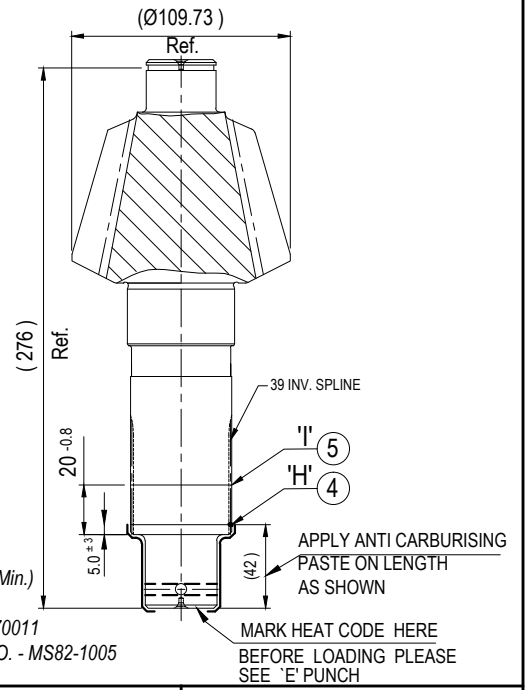

NOTE :
1. *SURFACE HARDNESS AT OTHER AREAS = Hv 600 Min. (55 HRc. Min.)*
2. *EFF. CASE DEPTH AT OTHER AREAS = 0.7 mm*
4. *CARBURISED & HARDEND ALL OVER AS PER MMC STD. ES - X 70011*
5. *EQUIVALENT VALUES AS PER MMC STD. (CONVERSION TABLE) NO. - MS82-1005*

REVISION		
A	B	C
D	E	F

SR. NO.	CHARACTERISTIC PRODUCT	CHARACTERISTIC PROCESS	SPL CHAR SPL CLASS	PRODUCT / PROCESS SPECIFICATIONS	EVALUATION MEASUREMENT TECHNIQUE INSTRUMENT	EVALUATION MEASUREMENT TECHNIQUE NO.	SAMPLING SIZE	SAMPLING FREQ.	CONTROL METHOD	CORECTIVE ACTION / REACTION PLAN
1.	***SURFACE HARDNESS AT FLANK AREA***			***720 Hv. Min. (61 HRc)***	*HARDNESS TESTER*		*5 PC*	*LOT*	*ON LINE AUTO CONTROL (CGCF)*	*CHECK FURNACE SETTING DATA & CONFIRM FOR CORRECTNESS*
2.	***CORE HARDNESS AT CENTRE OF TOOTH AREA***			*340 ~ 420 Hv.*	*MICRO-HARDNESS TESTER*	-	*1 PC*	*LOT*		
3.	***EFF. CASE DEPTH AT FLANK AREA PCD***			***1.5 ~ 2.0 mm 513 HV CUTOFF VALUE***			*1 PC*	*LOT*		
4.	*SURFACE HARDNESS AT POINT 'H'*			*34 ~ 42 HRc.*	*HARDNESS TESTER*	-	*1 PC*	*LOT*		
5.	*SURFACE HARDNESS AT POINT 'I'*			*600 Hv Min. (55 HRc. Min.)*	*HARDNESS TESTER*	-	*1 PC*	*LOT*		
6.	***SHOT BLAST***			***FREE FROM RUST & SCALES***	*VISUAL*	--	*100%*	*CONT.*		

DRN BY	*SPACHUNKAR*	CHKD BY	*SPACHUNKAR*	APRD BY	*B.LEVA*	PAGE 01 / 02

UNSPECIFIED TOLERANCES AS PER IS : 2102 (PART-1) : 1993 MEDIUM CLASS. | *ALL DIMENSIONS ARE IN MILLIMETERS.* | *DO NOT SCALE, IF IN DOUBT, PLEASE ASK.* | *BREAK SHARP CORNERS.*