VE COMMERCIAL VEHICLES LIMITED.
(UNIT:EICHER ENGINEERING COMPONENTS;DEWAS)UNIT:–II

CONTROL PLAN

PREV. OPN.	NEXT. OPN.	SURFACE FINISH :	DOC. NO. :
80 - PRE HT INSPECTION	95 - TEETH CHAMFERING		AP04 : 160 : 20

CONTROL PLAN NO : 2455 / 90

LOCATION → REST →→ CLAMP —N→ SPL.CHAR. (CRITICAL DIMN.) B EECD ◇ CUSTOMER.

EFF DATE	26.08.14	EFF DATE	04.01.15	EFF DATE	22.12.15
PROTOTYPE	✓	PRELAUNCH	✓	PRODN	✓
O.E.	✓	EXPORT			

PART NO.	ED 2455 (574270)		
PART NAME	GEAR, PRIMARY DRIVEN	OPN. NO.	90
CUSTOMER	ROYAL ENFIELD		
OPERATION	* HEAT - TREATMENT		

CELL [OPTIONAL]	M./C.	M / C NO. [OPTIONAL]
	S.Q.F.	

FIXTURE	FIX. NO.	TOOL	NO.

MATERIAL - : 16MnCr5
COMP. WT - : 0.884 Kg.

*** HEAT-TREATMENT- :**

MARKING ;
PRE-WASHING ;
PRE-HEATING ;
CARBURISING ;
HARDENING ;
POST-WASHING ;
TEETH CHAMFERING ;
SHOT BLASTING ;

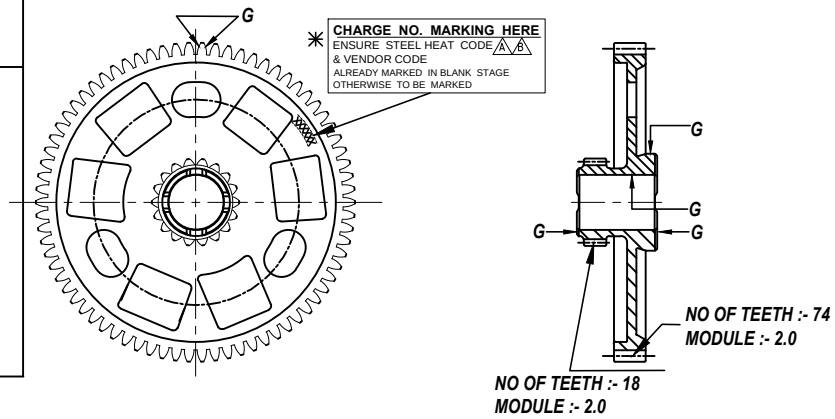

SURFACE HARDNESS	CORE HARDNESS	* EFFECTIVE CASE DEPTH		MICROSTRUCTURE	
ALL AREA	AT RCD (MIDDLE OF TEETH)	UNGROUND AREA	AT PCD AFTER GEAR GRINDING	CASE	CORE
80 ~ 83 HRA	300 ~ 450 HV1	0.6 ~ 0.9 mm CUT OFF 513 HV1	0.5 ~ 0.8 mm CUT OFF 513 HV1	FINE TEMPERED MARTENSITE + RA <10% AND FREE FROM CARBIDES GBO<20 micron	LOW CARBON MARTENSITE + BAINITE

NOTE:- 1) GROUND SURFACE : HARDNESS @ 0.1mm SHALL BE 650 HV MIN.

* PLEASE NOTE, GEAR TEETH WOULD BE FURTHER GROUND.

SR. NO.	CHARACTERISTICS PRODUCT	CHARACTERISTICS PROCESS	SPL CHAR CLASS	PRODUCT SPECIFICATIONS	EVALUATION MEASUREMENT TECHNIQUE INSTRUMENT	NO.	SAMPLING SIZE	SAMPLING FREQ	CONTROL METHOD	CORRECTIVE ACTION / REACTION PLAN
1.	EFF. CASE DEPTH		B	REFER ABOVE TABLE	MICRO-HARDNESS TESTER	---	1 PC	PER CHARGE	TESTING	CHECK FURNACE SETTING DATA & CONFIRM FOR CORRECTNESS
2.	SURFACE HARDNESS				HARDNESS TESTER	---	1 PC	PER CHARGE		
3.	CORE HARDNESS					---	1 PC	PER CHARGE		
4.	MICROSTRUCTURE				MICROSCOPE	---	1 PC	PER CHARGE		
						---	1 PC	PER CHARGE		
5.	SHOT BLAST			FREE FROM RUST & SCALE	VISUAL	---	100%			

FOR REFERENCE ONLY

REVISION

A	B	C
1 MARKING DETAILS ADDED. (M.W. 04.06.15)	2 REMOVED PART NO. MARKING, CHANGED AS PER BLANK DRG. REV-E. (M.W. 25.07.15)	3 TEMPERING TEMPRATURE RELATED NOTE, REMOVED AS PER CUST'S LATEST PART DRG. REV. (d). (MUKESH 21.12.15)

DRN BY	MUKESH	CHKD BY	R.PATHAK	APRD BY	B.LEVA

UNSPECIFIED TOLERANCES AS PER IS : 2102 (PART-1) : 1993 MEDIUM CLASS. | ALL DIMENSIONS ARE IN MILLIMETERS. | DO NOT SCALE, IF IN DOUBT, PLEASE ASK. | BREAK SHARP CORNERS.