VE COMMERCIAL VEHICLES LIMITED.
(UNIT:EICHER ENGINEERING COMPONENTS;DEWAS)UNIT:–II

CONTROL PLAN

PREV. OPN.	NEXT. OPN.	SURFACE FINISH :	DOC. NO. :
60 - PRE HT INSPECTION	80 - TEETH CHAMFERING		AP04 : 160 : 20

CONTROL PLAN NO : 24115 / 70

LOCATION → REST →→ CLAMP —N→ SPL.CHAR. (CRITICAL DIMN.) (B) EECD ◇ CUSTOMER.

REVISION: A B C / D E F

EFF DATE	11.09.17	EFF DATE		EFF DATE	
PROTOTYPE	✓	PRELAUNCH		PRODN	
O.E.	✓	EXPORT			
PART NO.	ED 24115 (1570036)				
PART NAME	GEAR, 4TH DRIVE	OPN. NO.	70		
CUSTOMER	ROYAL ENFIELD				
OPERATION	* HEAT - TREATMENT				
CELL [OPTIONAL]	M./C. S.Q.F.	M / C NO. [OPTIONAL]			

FIXTURE	FIX. NO.	TOOL	NO.

MATERIAL - : 16MnCr5

COMP. WT - : 0.130 Kg.

*** HEAT-TREATMENT- :**

✳ MARKING ;
PRE-WASHING ;
PRE-HEATING ;
CARBURISING ;
HARDENING ;
POST-WASHING ;
TEETH CHAMFERING ;
SHOT BLASTING ;

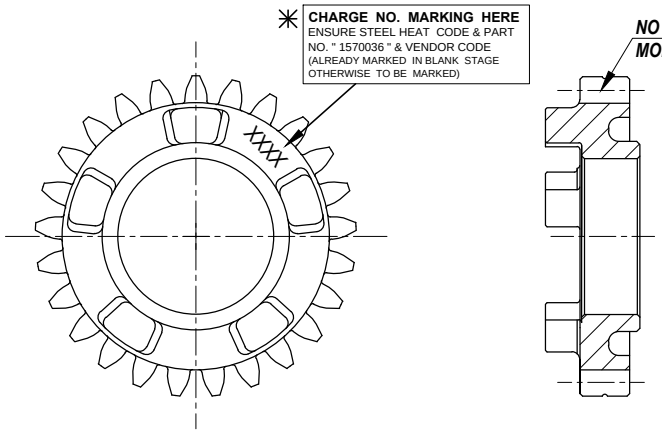

✡

SURFACE HARDNESS	CORE HARDNESS	EFFECTIVE CASE DEPTH		MICROSTRUCTURE	
ALL AREA	AT RCD (MIDDLE OF TEETH)	AT PCD		CASE	CORE
80 ~ 84 HRA	300 ~ 450 HV1	PROCESS REQUIRED	0.7 ~ 0.9 mm CUT OFF 513 HV1	FINE TEMPERED MARTENSITE + RA <10% AND FREE FROM CARBIDES GBO<20 micron.	LOW CARBON MARTENSITE + BAINITE
		FINAL REQUIRED	0.6 ~ 0.9 mm CUT OFF 513 HV1		

NOTE:- 1) GROUND SURFACE : HARDNESS @ 0.1mm SHALL BE 650 HV MIN.

SR. NO.	CHARACTERISTICS PRODUCT	CHARACTERISTICS PROCESS	SPL CHAR CLASS	PRODUCT SPECIFICATIONS	EVALUATION MEASUREMENT TECHNIQUE INSTRUMENT	NO.	SAMPLING SIZE	SAMPLING FREQ	CONTROL METHOD	CORRECTIVE ACTION / REACTION PLAN
1.	EFF. CASE DEPTH		(B)	✡ REFER ABOVE TABLE	MICRO-HARDNESS TESTER	---	1 PC	PER CHARGE	TESTING	CHECK FURNACE SETTING DATA & CONFIRM FOR CORRECTNESS
2.	SURFACE HARDNESS				HARDNESS TESTER	---	5 PC	PER CHARGE		
3.	CORE HARDNESS					---	1 PC	PER CHARGE		
4.	MICROSTRUCTURE				MICROSCOPE	---	1 PC	PER CHARGE		
						---	1 PC	PER CHARGE		
5.	SHOT BLAST			FREE FROM RUST & SCALE	VISUAL	---	100%			

FOR REFERENCE ONLY

DRN BY	VIJAY S GIRI	CHKD BY	R. PATHAK	APRD BY	B.LEVA	PAGE 01 / 02

UNSPECIFIED TOLERANCES AS PER IS : 2102 (PART-1) : 1993 MEDIUM CLASS. | ALL DIMENSIONS ARE IN MILLIMETERS. | DO NOT SCALE, IF IN DOUBT, PLEASE ASK. | BREAK SHARP CORNERS.