PROJECT : RE-P-1

VE COMMERCIAL VEHICLES LIMITED.
(UNIT:EICHER ENGINEERING COMPONENTS;DEWAS)UNIT:–II

# CONTROL PLAN

| PREV. OPN. | NEXT. OPN. | SURFACE FINISH : | DOC. NO. : |
|---|---|---|---|
| 90 - PRE HT INSPECTION | 110 - TEETH CHAMFERING | | AP04 : 160 : 20 REV-01 (DATE-05.10.17) |

CONTROL PLAN NO : 2433 / 100

KEY CONTACT PERSON :- S. KOMULWAD

CORE TEAM :- SK, LEVA, SRS, IDS, MM, KUNAL, MJ, VSG

| EFF DATE | 25.11.16 | EFF DATE | 11.09.17 | EFF DATE | |
|---|---|---|---|---|---|
| PROTOTYPE | ✓ | PRELAUNCH | ✓ | PRODN | |
| O.E. | ✓ | EXPORT | | | |

| PART NO. | ED 2433 ( 575406 / c ) | | |
|---|---|---|---|
| PART NAME | GEAR, 5th DRIVEN | OPN. NO. | 100 |
| CUSTOMER | ROYAL ENFIELD | | |
| OPERATION | * HEAT - TREATMENT | | |

| CELL [ OPTIONAL ] | M./C. | M / C NO. [ OPTIONAL ] |
|---|---|---|
| | S.Q.F. | |

| FIXTURE | FIX. NO. | TOOL | NO. |
|---|---|---|---|
| | | | |

LOCATION → | REST →→→ | CLAMP —N→ | SPL.CHAR. ( CRITICAL DIMN. ) | (B) EECD | ◇ CUSTOMER.

**MATERIAL - : SAE 8620H** A3
**COMP. WT - :** 0.36 Kg.

*** HEAT-TREATMENT- :**

MARKING ;
PRE-WASHING ;
PRE-HEATING ;
CARBURISING ;
HARDENING ;
POST-WASHING ;
SHOT BLASTING ;
TEETH CHAMFERING
(REFER SEPRATE C.P) ;

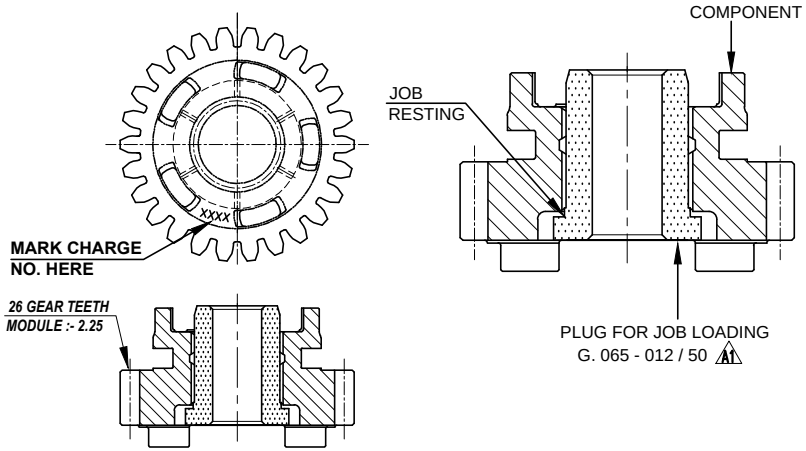


| SURFACE HARDNESS | CORE HARDNESS | EFFECTIVE CASE DEPTH | | MICROSTRUCTURE | |
|---|---|---|---|---|---|
| ALL AREA | @ RCD (MIDDLE OF TEETH) | @ PCD A4 | | CASE | CORE |
| 58 - 62 HRC A2 A4 (TARGET 60 - 62 HRC) | 330-480 HV1 A2 | PROCESS REQUIRED | 0.75 ~ 0.95 mm CUT OFF 513 HV1 (TARGET 0.8-0.85mm) | FINE TEMPERED MARTENSITE + RA <10% AND FREE FROM CARBIDES GBO<20 micron ,5% CARBIDE GLOBULE FORM ALLOWED. | LOW CARBON MARTENSITE + BAINITE |
| | | FINAL REQUIRED | 0.65 ~ 0.95 mm CUT OFF 513 HV1 | | |

| SR. NO. | CHARACTERISTICS PRODUCT | CHARACTERISTICS PROCESS | SPL CHAR CLASS | PRODUCT SPECIFICATIONS | EVALUATION MEASUREMENT TECHNIQUE INSTRUMENT | NO. | SAMPLING SIZE | SAMPLING FREQ | RESP. | CONTROL METHOD | CORRECTIVE ACTION / REACTION PLAN |
|---|---|---|---|---|---|---|---|---|---|---|---|
| 1. | EFF. CASE DEPTH | | (B) | REFER ABOVE TABLE | MICRO-HARDNESS TESTER | --- | 1 PC | PER CHARGE | ~ INSPTR. | TESTING | CHECK FURNACE SETTING DATA & CONFIRM FOR CORRECTNESS |
| 2. | SURFACE HARDNESS | | (B) | | HARDNESS TESTER | --- | 5 PC | PER CHARGE | ~ INSPTR. | | |
| 3. | CORE HARDNESS | | (B) | | | --- | 1 PC | PER CHARGE | ~ INSPTR. | | |
| 4. | MICROSTRUCTURE | | (B) | | MICROSCOPE | --- | 1 PC | PER CHARGE | ~ INSPTR. | | |
| | | | | | | --- | 1 PC | PER CHARGE | ~ INSPTR. | | |
| 5. | SHOT BLAST | | | FREE FROM RUST & SCALE | VISUAL | --- | 100% | PER CHARGE | ~ INSPTR. | | |

FOR REFERENCE ONLY

REVISION

| A1 | A2 | A3 |
|---|---|---|
| D | E | F |
| A1 CHANGES DONE AS PER INPUTS GIVEN BY NPD EXECUTION TEAM. DT-04.04.17 BY-VSG. | A2 SURFACE HARDNESS 80-84 HRA WAS 80-83 HRA & CORE HARDNESS 330-480 HV1 WAS 300-450 HV1 AS PER CUSTOMER'S LATEST DRAWING REV-b. BY-VSG. DT-24.07.17 | A3 MATERAIL SCM 420 REMOVED REVISED AS PER CUST'S LATEST DRG. REV.-c. BY-VSG. D T-13.12.17. |
| A4 SURFACE HARDNESS 58 - 62 HRC WAS 80 - 84 HRA & ECD 0.65-0.95 MM WAS 0.6-0.9 MM TESTED AS PER DCR NO.-1115. DT-29.01.18. BY-VSG. DT-29.01.18. | | |

| DRN BY | VIJAY S GIRI | CHKD BY | R.PATHAK | APRD BY | B.LEVA | PAGE 01 / 02 |
|---|---|---|---|---|---|---|

UNSPECIFIED TOLERANCES AS PER IS : 2102 (PART-1) : 1993 MEDIUM CLASS. | ALL DIMENSIONS ARE IN MILLIMETERS. | DO NOT SCALE, IF IN DOUBT, PLEASE ASK. | BREAK SHARP CORNERS.