VE COMMERCIAL VEHICLES LIMITED.
(UNIT:EICHER ENGINEERING COMPONENTS;DEWAS)UNIT:–II

CONTROL PLAN

PREV. OPN.	NEXT. OPN.	SURFACE FINISH :	DOC. NO. :
80 - PRE HT INSPECTION	110 - AFTER HT INSPECTION (D)		AP04 : 160 : 20

CONTROL PLAN NO : *2444 / 090* (A)

LOCATION → REST →→ CLAMP —N→ SPL.CHAR. (CRITICAL DIMN.) (B) EECD ◇ CUSTOMER.

EFF DATE	25.08.2014	EFF DATE	04.01.15	EFF DATE	08.01.16
PROTOTYPE	✓	PRELAUNCH	✓	PRODN	✓
O.E.	✓	EXPORT			

PART NO.	***ED 2444 (574237)***		
PART NAME	***GEAR, 3rd & 4th DRIVE***	OPN. NO.	***090***
CUSTOMER	***ROYAL ENFIELD***		
OPERATION	**** HEAT - TREATMENT***		

CELL [OPTIONAL]	M./C.	M / C NO. [OPTIONAL]
	S.Q.F.	

FIXTURE	FIX. NO.	TOOL	NO.

MATERIAL - : 16MnCr5
COMP. WT - : 0.34 Kg.

*** HEAT-TREATMENT- :**
MARKING ;
PRE-WASHING ;
PRE-HEATING ;
CARBURISING ;
HARDENING ;
POST-WASHING ;
TEMPERING ;
SHOT BLASTING ;

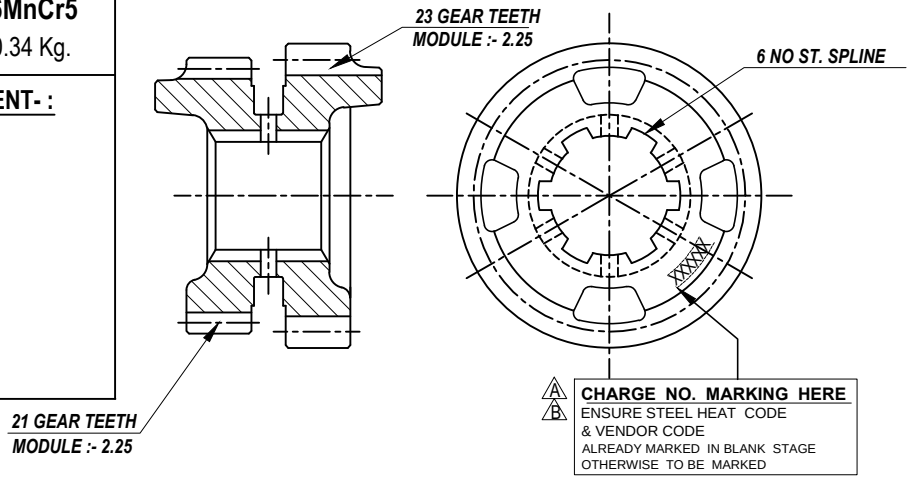

SURFACE HARDNESS	CORE HARDNESS	EFFECTIVE CASE DEPTH	MICROSTRUCTURE	
ALL AREA	@ RCD (MIDDLE OF TEETH)	@ PCD	CASE	CORE
80-83 HRA	300-450 HV1	0.6-0.9 mm CUT OFF 513 HV1	FINE TEMPERED MARTENSITE + RA <10% AND FREE FROM CARBIDES GBO<20 micron	LOW CARBON MARTENSITE + BAINITE

SR. NO.	CHARACTERISTICS PRODUCT	CHARACTERISTICS PROCESS	SPL CHAR CLASS	PRODUCT SPECIFICATIONS	EVALUATION MEASUREMENT TECHNIQUE INSTRUMENT	NO.	SAMPLING SIZE	SAMPLING FREQ	CONTROL METHOD	CORRECTIVE ACTION / REACTION PLAN
1.	***EFF. CASE DEPTH***		(B)	***REFER ABOVE TABLE***	*MICRO-HARDNESS TESTER*	---	*1 PC*	*PER CHARGE*	*TESTING*	*CHECK FURNACE SETTING DATA & CONFIRM FOR CORRECTNESS*
2.	***SURFACE HARDNESS***				*HARDNESS TESTER*	---	*1 PC*	*PER CHARGE*		
3.	*CORE HARDNESS*					---	*1 PC*	*PER CHARGE*		
4.	*MICROSTRUCTURE*				*MICROSCOPE*	---	*1 PC*	*PER CHARGE*		
						---	*1 PC*	*PER CHARGE*		
5.	*SHOT BLAST*			*FREE FROM RUST & SCALE*	*VISUAL*	---	*100%*			

FOR REFERENCE ONLY

REVISION

A	B	C
D	E	F

(A) ADDED MARKING DETAIL & OPN. 90 WAS 100

(B) REMOVED PART NO. MARKING AS PER BLANK DRG. REV-f

(C) TEMPERING TEMPRATURE RELATED NOTE. REMOVED AS PER CUST'S LATEST PART DRG REV. (e). (MUKESH 21.12.15)

(D) TEETH CHAMFERING (GRATOMAT) OPN NO-100 ELIMINATED AS PER DCR NO: 951 DT: - 23.03.17 (VS GIRI, DATE-23.03.17)

DRN BY	*Mukesh*	CHKD BY	*R.PATHAK*	APRD BY	*B.LEVA*	PAGE 01 / 02

UNSPECIFIED TOLERANCES AS PER IS : 2102 (PART-1) : 1993 MEDIUM CLASS. | *ALL DIMENSIONS ARE IN MILLIMETERS.* | *DO NOT SCALE, IF IN DOUBT, PLEASE ASK.* | *BREAK SHARP CORNERS.*