PROJECT NAME : P-1

VE COMMERCIAL VEHICLES LIMITED.
(UNIT:EICHER ENGINEERING COMPONENTS;DEWAS)UNIT:-II

CONTROL PLAN

PREV. OPN.	NEXT. OPN.	SURFACE FINISH :	DOC. NO. :
60 - PRE HT INSPECTION	80 -TEETH CHAMFERING		AP04 : 160 : 20 REV-01 (DATE-05.10.17)

CONTROL PLAN NO : 2477 / 070

KEY CONTACT PERSON :- S. KOMULWAD

CORE TEAM :- SK, LEVA, SRS, IDS, MM, KUNAL, MJ, VSG

REVISION: A1 / A2 / C / D / E / F

EFF DATE	01.09.2016	EFF DATE	11.09.17	EFF DATE	
PROTOTYPE	✓	PRELAUNCH	✓	PRODN	
O.E.	✓	EXPORT			

PART NO.	ED 2477 (575488 / d)		
PART NAME	GEAR, CRANK BALANCER DRIVEN	OPN. NO.	070
CUSTOMER	ROYAL ENFIELD		
OPERATION	* HEAT - TREATMENT		

CELL [OPTIONAL]	M./C.	M / C NO. [OPTIONAL]
	S.Q.F.	

FIXTURE	FIX. NO.	TOOL	NO.
AVAILABLE AT H.T			

LOCATION → | REST → | CLAMP —N→ | SPL.CHAR. (CRITICAL DIMN.) | B EECD | ◇ CUSTOMER.

MATERIAL - : SAE 8620H
COMP. WT - : 0.447 Kg. A2

*** HEAT-TREATMENT- :**

✳ MARKING ;
PRE-WASHING ;
PRE-HEATING ;
CARBURISING ;
HARDENING ;
POST-WASHING ;
TEMPERING ;
GRATOMATE CHAMFER ;
SHOT BLASTING ;

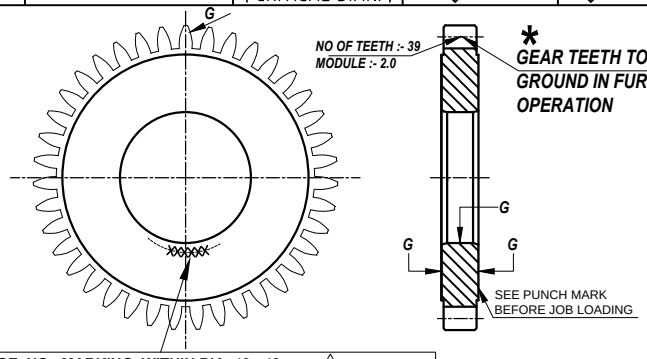

✳ **CHARGE NO. MARKING WITHIN DIA. 43 - 48.** A1
STEEL HEAT CODE & VENDOR CODE ALREADY MARKED
THOUGH THIS WILL BE VANISHED AFTER FACE MACHNING. SO WILL BE MARKED AGAIN ON LASER MACHINE. IT SHOULD BE MARKED AGAIN TO AVOID MIX UP WITH ANOTHER BATCH.

*** GROUND SURFACE - BORE, BOTH OUTER FACES & GEAR TEETH, AS MENTIONED WITH 'G'.**

SURFACE HARDNESS	CORE HARDNESS	EFFECTIVE CASE DEPTH		MICROSTRUCTURE	
ALL AREA	AT RCD	UNGROUND AREA	GROUND AREA *	CASE	CORE
80 ~ 84 HRA A1	330 ~ 480 HV1 A1	0.6 ~ 0.9 mm CUT OFF 513 HV1 #	0.5 ~ 0.8 mm CUT OFF 513 HV1	FINE TEMPERED MARTENSITE + RA <10% AND FREE FROM CARBIDES GBO<20 micron	LOW CARBON MARTENSITE + BAINITE

NOTE:- 1) GROUND SURFACE :- HARDNESS AT 0.1MM SHALL BE 650 HV MIN.
 # FOR PROCESS CASE 0.7 - 0.9 MM

A1 SURFACE HARDNESS 80-84 HRA WAS 80-83 HRA & CORE HARDNESS 330-480 HV1 WAS 300-450 HV1 & RADIAL LOCATION DEFINED AS PER CUSTOMER'S LATEST DRAWING REV.-c. BY-VSG. DT-04.10.17

A2 MATERIAL SCM 420 REMOVED REVISED AS PER CUST'S LATEST DRG. REV.-d. BY-VSG. DT-13.12.17.

SR. NO.	CHARACTERISTICS PRODUCT	CHARACTERISTICS PROCESS	SPL CHAR CLASS	PRODUCT SPECIFICATIONS	EVALUATION MEASUREMENT TECHNIQUE INSTRUMENT	NO.	SAMPLING SIZE	SAMPLING FREQ	RESP.	CONTROL METHOD	CORRECTIVE ACTION / REACTION PLAN
1.	EFF. CASE DEPTH		◇	REFER ABOVE TABLE	MICRO-HARDNESS TESTER	---	1 PC	PER CHARGE	~ INSPTR.	TESTING	CHECK FURNACE SETTING DATA & CONFIRM FOR CORRECTNESS
2.	SURFACE HARDNESS				HARDNESS TESTER	---	5 PC	PER CHARGE	~ INSPTR.		
3.	CORE HARDNESS					---	1 PC	PER CHARGE	~ INSPTR.		
4.	MICROSTRUCTURE		◇		MICROSCOPE	---	1 PC	PER CHARGE	~ INSPTR.		
						---	1 PC	PER CHARGE	~ INSPTR.		
5.	SHOT BLAST			FREE FROM RUST & SCALE	VISUAL	---	100%	PER CHARGE	~ INSPTR.		

FOR REFERENCE ONLY

DRN BY	VIJAY S GIRI	CHKD BY	R. PATHAK	APRD BY	B.LEVA

PAGE 01 / 02

UNSPECIFIED TOLERANCES AS PER IS : 2102 (PART-1) : 1993 MEDIUM CLASS. | ALL DIMENSIONS ARE IN MILLIMETERS. | DO NOT SCALE, IF IN DOUBT, PLEASE ASK. | BREAK SHARP CORNERS.